No.EX##-OML0009

Operation Manual

Fieldbus system
CC-Link
compatible

PRODUCT NAME

*EX600-SMJ**
*EX600 –DX**
*EX600 –DY**
*EX600 –AX**
*EX600-ED**

MODEL/ Series

SMC Corporation

Table of Contents

Safety Instructions	2
Product Outline	9
Assembly	11
Mounting and Installation	13
SI Unit	
How to order	17
Name and Function of Parts	17
Mounting and Installation	18
Setting and Adjustment	20
Error Display	25
Specifications	27
Digital Input Unit	
How to order	29
Name and Function of Parts	29
Mounting and Installation	31
Error Display	33
Specifications	34
Digital Output Unit	
How to order	38
Name and Function of Parts	38
Mounting and Installation	39
Error Display	40
Specifications	41
Analog Input Unit	
How to order	43
Name and Function of Parts	43
Mounting and Installation	44
Error Display	45
Specifications	46
Endplate	
How to order	52
Name and Function of Parts	52
Mounting and Installation	53
Specification	54
Troubleshooting	56
Parameter setting	61
I/O map	71
Diagnostics	72
Accessory	78

Safety Instructions

These safety instructions are intended to prevent hazardous situations and/or equipment damage. These instructions indicate the level of potential hazard with the labels of “Caution,” “Warning” or “Danger.”. They are all important notes for safety and must be followed in addition to International standards (ISO/IEC), Japan Industrial Standards (JIS)[*1)] and other safety regulations[*2)].

*1) ISO 4414: Pneumatic fluid power - - General rules relating to systems.
ISO 4413: Hydraulic fluid power - - General rules relating to systems.
IEC 60204-1: Safety of machinery - -Electrical equipment of machines. (Part 1: General requirements)
ISO 10218-1992: Manipulating industrial robots -Safety.
JIS B 8370: General rules for pneumatic equipment.
JIS B 8361: General rules for hydraulic equipment.
JIS B 9960-1: Safety of machinery - Electrical equipment of machines. (Part 1: General requirements)
JIS B 8433-1993: Manipulating industrial robots - Safety.
etc.

*2) Labor Safety and Sanitation Law, etc.

⚠ **Caution** : Operator error could result in injury or equipment damage.

⚠ **Warning** : Operator error could result in serious injury or loss of life.

⚠ **Danger** : In extreme conditions, there is a possibility of serious injury or loss of life.

⚠ Warning

1. The compatibility of the product is the responsibility of the person who designs the equipment or decides its specifications.

Since the product specified here is used under various operating conditions, its compatibility with specific equipment must be decided by the person who designs the equipment or decides its specifications based on necessary analysis and test results. The expected performance and safety assurance of the equipment will be the responsibility of the person who has determined its compatibility with the product. This person should also continuously review all specifications of the product referring to its latest catalog information, with a view to giving due consideration to any possibility of equipment failure when configuring the equipment.

2. Only personnel with appropriate training should operate machinery and equipment.

The product specified here may become unsafe if handled incorrectly. The assembly, operation and maintenance of machines or equipment including our products must be performed by an operator who is appropriately trained and experienced.

3. Do not service or attempt to remove product and machinery/equipment until safety is confirmed.

1. The inspection and maintenance of machinery/equipment should only be performed after measures to prevent falling or runaway of the driven objects have been confirmed.
2. When the product is to be removed, confirm that the safety measures as mentioned above are implemented and the power from any appropriate source is cut, and read and understand the specific product precautions of all relevant products carefully.
3. Before machinery/equipment is restarted, take measures to prevent unexpected operation and malfunction.

4. Contact SMC beforehand and take special consideration of safety measures if the product is to be used in any of the following conditions.

1. Conditions and environments outside of the given specifications, or use outdoors or in a place exposed to direct sunlight.
2. Installation on equipment in conjunction with atomic energy, railways, air navigation, space, shipping, vehicles, military, medical treatment, combustion and recreation, or equipment in contact with food and beverages, emergency stop circuits, clutch and brake circuits in press applications, safety equipment or other applications unsuitable for the standard specifications described in the product catalog.
3. An application which could have negative effects on people, property, or animals requiring special safety analysis.
4. Use in an interlock circuit, which requires the provision of double interlock for possible failure by using a mechanical protective function, and periodical checks to confirm proper operation.

⚠ Caution

1. The product is provided for use in manufacturing industries.

The product herein described is basically provided for peaceful use in manufacturing industries.
If considering using the product in other industries, consult SMC beforehand and exchange specifications or a contract if necessary.
If anything is unclear, contact your nearest sales branch.

Limited warranty and Disclaimer/Compliance Requirements

The product used is subject to the following “Limited warranty and Disclaimer” and “Compliance Requirements”.
Read and accept them before using the product.

Limited warranty and Disclaimer

1. The warranty period of the product is 1 year in service or 1.5 years after the product is delivered.*3)
   Also, the product may have specified durability, running distance or replacement parts. Please consult your nearest sales branch.
2. For any failure or damage reported within the warranty period which is clearly our responsibility, a replacement product or necessary parts will be provided.
   This limited warranty applies only to our product independently, and not to any other damage incurred due to the failure of the product.
3. Prior to using SMC products, please read and understand the warranty terms and disclaimers noted in the specified catalog for the particular products.

*3) Vacuum pads are excluded from this 1 year warranty.
A vacuum pad is a consumable part, so it is warranted for a year after it is delivered.
Also, even within the warranty period, the wear of a product due to the use of the vacuum pad or failure due to the deterioration of rubber material are not covered by the limited warranty.

Compliance Requirements

When the product is exported, strictly follow the laws required by the Ministry of Economy, Trade and Industry (Foreign Exchange and Foreign Trade Control Law).

Operator

♦This operation manual has been written for those who have knowledge of machinery and apparatus that use pneumatic equipment and have full knowledge of assembly, operation and maintenance of such equipment.
♦Please read this operation manual carefully and understand it before assembling, operating or providing maintenance.

⚠Warning

♦Do not disassemble, modify (including change of printed circuit board) or repair this product.
Injury or failure can result.

♦Do not perform operation or setting with wet hands.
There is a risk of electric shock.

♦Do not operate the product beyond the specification range.
Do not apply the product to flammable gas or liquid or the gas or liquid harmful to human body.
Otherwise it causes fire, malfunction, or damage to the system.
Please confirm the specifications before use.

♦Do not operate the product in an environment where flammable or explosive gas may be present.
Fire, explosion or corrosion can result.
The product is not designed to be explosion proof.

♦The following instructions must be followed when using the product in an interlocking circuit:
• Provide multiple interlocking using another system such as mechanical protection
• Check the product regularly to ensure proper operation
Otherwise malfunction can cause an accident.

♦The following instructions must be followed while performing maintenance work:
• Turn off the power supply
• Stop the air supply, exhaust the residual pressure and verify that the air is released to atmosphere before performing maintenance work
Otherwise it can cause injury.

⚠ Caution

♦When handling, assembling and replacing the unit:
- When handling the unit, do not touch any sharp metal parts of the connector and plug.
- When disassembling the unit, do not strike the product forcefully.
  The connection parts are firmly joined with seals.
- When joining units, take care not to get your fingers trapped between units.

♦Perform a proper functional check after completing maintenance work.
Stop operation if any abnormality is observed or if the product is not working properly.
Safety cannot be assured due to unexpected malfunction.

♦Provide grounding to assure the safety and noise resistance of the Fieldbus system.
Individual grounding should be provided close to the product with a short cable.

NOTE

♦ Follow the instructions given below when handling the Fieldbus system.
Otherwise, the system may be damaged and may fail.

♦The instructions on selection (installation, wiring, operating environment, adjustment, operation and maintenance) described below must also be followed.

Product specifications

- Use the following UL recognized direct-current power supply.

(1) Limited voltage current circuit in accordance with UL508
A circuit whose power is supplied by secondary coil of an insulating transformer that meets the following conditions
- Maximum voltage (with no load) : less than 30 Vrms (42.4 Vpeak)
- Maximum current : (1) less than 8A (including when short circuited)
(2) limited by circuit protector (such as a fuse) with the following ratings

No load voltage (Vpeak)	Max. current rating (A)
0 ~ 20 [V]	5.0
Above 20 to 30 [V]	100 / peak voltage

(2) A circuit using max. 30 Vrms or less (Class-2 circuit), whose power is supplied by Class-2 power supply unit in accordance with UL1310 or by Class-2 power supply unit in accordance with UL1585

- Operate the Fieldbus system within the specified voltage.
Operation with a voltage outside of the specifications could cause malfunction or damage to the system.

- The reference for the power supply of the SI unit is 0 V for both the output and control power supplies of the SI unit.

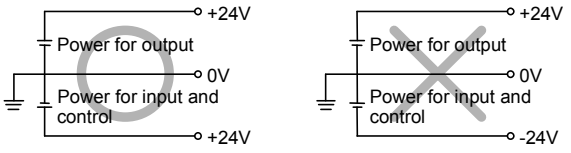

- Do not mount in a location that will be used as a foothold.
The unit may be damaged if excessive force is applied by stepping or climbing onto it.

- Reserve sufficient space for maintenance
  Be sure to reserve sufficient space for maintenance when designing the layout of the system.
- Do not remove any nameplates or labels.
  This can lead to incorrect maintenance, or misreading of the operation manual, which could cause damage or malfunction to the unit.
  It may also result in non-conformity to safety standards.
- Be careful regarding the inrush current generated when the power is supplied.
  Depending on the connected load, an initial charging current may cause an over current protective function resulting in malfunction of the system.

♦ Precautions for handling

Installation

- Do not drop, hit or apply excessive shock to the unit.
  Otherwise the unit could be damaged, resulting in failure.
- Tighten screws to the specified tightening torque.
  Excessive tightening torque can break the screws.
  IP67 protection cannot be guaranteed if the screws are not tightened to the specified torque.
- When lifting a large solenoid valve manifold unit, take care to avoid causing stress to the valve connection joint
  The connection parts of the unit may be damaged.
  Because the unit may be heavy, carrying and installation should be performed by more than one operator to avoid strain or injury.

Wiring (including plugging in/out of connector)

- Do not bend the cables or apply excessive force by pulling or placing heavy loads on them.
  Bending or tensile stress could cause the cables to break.
- Connect wires and cables correctly.
  Incorrect wiring could break the Fieldbus system.
- Do not connect wires while the power is supplied.
  This can damage components and also cause undisirable behaviour
- Do not lay wires and cables together with power or high-voltage cables in the same wiring route.
  Otherwise the wires to the Fieldbus system could be affected by noise or induced surge voltage from power lines or high-voltage cables, causing malfunction. Route the wires to the SI Unit and each I/O device to a wire duct or in a protective tube other than those for power lines or high-voltage cables
- Verify the insulation of wiring.
  Poor insulation (interference with other circuits, poor insulation between terminals, etc.) can introduce excessive voltage or current to the SI Unit or each I/O device causing damage.
- Separate the power line for solenoid valves from the power line for input and control unit.
  Otherwise wires can be affected by noise or induced surge voltage, causing malfunction.
- Take appropriate measures against noise, such as using a noise filter, when the Fieldbus system is incorporated into equipment. Otherwise noise can cause malfunction.

Operating environment

- Select the proper type of protection according to the environment of operation.
  IP65/67 protection is achieved when the following conditions are met.
  (1). The units are connected properly with communication line connector and power cable M12 connector at both ends,
  (2) Suitable mounting of each unit and manifold valve.
  (3) Be sure to mount a seal cap on any unused connectors.
  If using in an environment that is exposed to water splashes, please take measures such as using a cover.

- Take sufficient shielding measures if the unit is installed in any of the locations described below.
  Insufficient measures could cause malfunction or failure.
  Verify the effectiveness of the measures after incorporation of the unit into the equipment.
  (1) A place where noise is generated due to static electricity
  (2) A place where electric field strength is high
  (3) A place where there is radioactive irradiation
  (4) A place near a power line
- Do not use in an environment exposed to oil or chemicals.
  Using the product in an environment exposed to any type of oil or chemicals, such as coolants and cleaning fluids, may adversely affect the unit, causing failure or malfunction reducing the life of the product.
- Do not use in an environment exposed to corrosive gases or liquids.
  The unit may be damaged, leading to malfunction.
- Do not use the unit near to a place where electrical surges are generated.
  Internal circuit elements of the Fieldbus system can deteriorate or break if equipment generating a large surge (electromagnetic lifter, high frequency induction furnace, motor, etc.) is located near the Fieldbus system. Provide surge prevention measures, and avoid interference.
- Use the Fieldbus system equipped with a surge absorber if a surge-generating load such as a solenoid valve is driven directly.
  Direct drive of a load generating surge voltage can damage the Fieldbus system.
- The product does not have resistance against lightning surges required for CE marking, so please take measures against lightning surge on the equipment side.
- Make sure foreign matter such as dust and piping waste does not get inside the product.
  This may cause failure or malfunction.
- Do not expose the Fieldbus system to vibration or impact.
  Otherwise failure or malfunction could be caused.
- Do not use in an environment that is subject to a temperature cycle.
  If it is subjected to a temperature cycle outside of normal temperature changes, this may adversely affect the internal parts of the unit.
- Do not use in a location directly exposed to sunlight.
  If the product is located in such a position, arrange a suitable cover to protect the unit.
  Direct exposure to sunlight may cause failure or malfunction.
- Keep within the specified ambient temperature range.
  Otherwise malfunction could be caused.
  Do not use the Fieldbus system in a place where temperature changes suddenly, even within the specified range.
- Do not expose the Fieldbus system to heat radiation from a heat source located nearby.
  Malfunction could be caused.

Adjustment and Operation

- Set the switches using a small screwdriver, etc.
  When operating the switches, do not touch parts other than the related parts.
  This may lead to failure due to component damage or short-circuit.
- Perform setting appropriate to the operating conditions.
  Inappropriate settings can cause defective operation.
- Please refer to page20-24 of this document for the settings of each switch.
- Please refer to the PLC manufacturer's manual for details of programming and addresses.
  For the PLC protocol and programming refer to the relevant manufacturer's documentation.

Maintenance and Checks

- Before performing maintenance work, turn off the power supply, stop the supply of air, exhaust the compressed air from inside the piping, and verify that the air is released to atmosphere.
  Otherwise, there is a risk of unexpected malfunction of the system components.
- Perform maintenance and checks regularly.
  Otherwise unexpected malfunction of components could occur due to a malfunction of the whole unit.
- Perform appropriate functional checks.
  Stop operation if any abnormality is observed or if the device does not work properly.
  Otherwise an unexpected malfunction of the unit or components could occur.
- Do not use solvents such as benzene, thinner, etc. to clean the Fieldbus system.
  They could damage the surface of the body and erase the indication markings on the body.
  Use a soft cloth to remove stains. For heavy stains, use a cloth soaked in diluted neutral detergent and fully squeezed, then wipe again with a dry cloth.

Product Outline

System configuration

The EX600 range of units can be connected to various types of Fieldbus to realize the reduction of I/O device wiring and the distributed control system. The unit communicates with the Fieldbus through the SI unit. One SI unit can be connected with manifold valves with up to 32 points and I/O units with maximum 10 points.
All wiring between devices use cables with connectors at both ends and the system is compliant to IP67 protection.

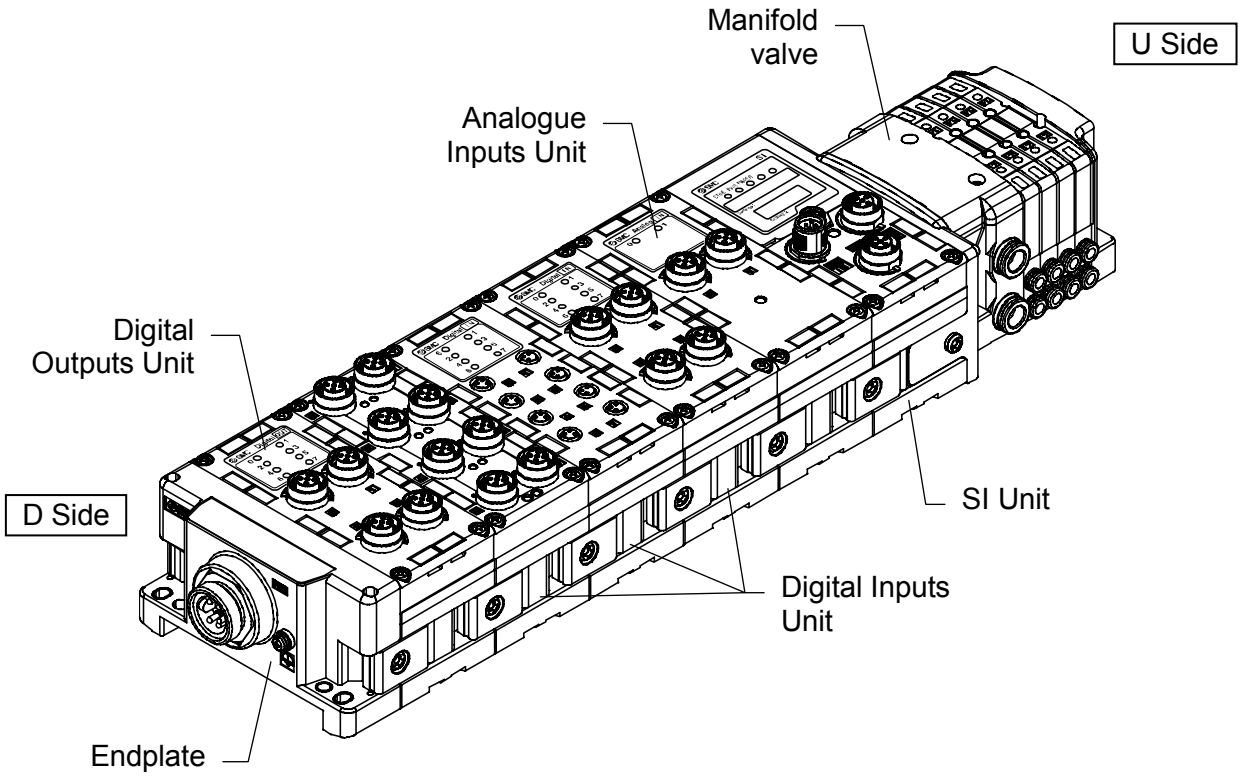

- SI unit: Performs Fieldbus communication and solenoid valve manifold ON/OFF output.
- Digital Input unit: For connecting sensors with switch output capability. PNP and NPN types are available.
- Digital Output unit: For connecting output equipment such as solenoid valves, lamps, buzzers, etc. PNP and NPN types are available.
- Analog Input unit: For connecting sensors with Analog output capability.
- Endplate: Connected at EX600 Manifold's D side, incorporating the power supply connection.
- Solenoid valve manifold: An assembly of solenoid valves. One connector is used as the electric connection to all connected valves.

Glossary

No.	Term	Definition
C	Communication speed	Data receive and transmit speed used by the Fieldbus. This depends on the master equipment (PLC etc.), the unit used is bps (bit per second).
C	Current consumption	The amount of current required by each unit in order to operate.
D	DIN rail	Metal rail in accordance with DIN standard.
D	D Side	T The DOWN side of the manifold, where EX600 Endplate is connected
F	FE	Functional Earth.
F	Fieldbus	Type of communication system between a PLC and factory equipment (such as measuring instruments or machines), in which data is exchanged by digital communication..
H	Handheld Terminal (H.T.)	A unit to connect with the SI unit PCI connection, for parameter adjustment, to monitor all input and output signal status, and for Forced input/output selection.
I	Input points	Number of points which can receive information from sensor. (Sensor and switch, etc.)
M	Manifold	An assembly with many openings for receiving and distributing fluids or gases.
N	NPN input	Input that receives data from sensor with an NPN output signal.
N	NPN output	Output that switches a load through an NPN transistor. The +ve side of the load is connected to a common +ve. For this reason, NPN output is often referred to as “common positive”.
N	Number of Station	Total number of stations occupied by all slaves connected to CC-Link.
O	Open circuit detection	Diagnostic function which detects open circuit, caused by broken or disconnected wiring to the input/output equipment.
O	Output Points	Number of points of output equipment (Solenoid Valve, lamp, motor starter, etc.) that can be operated.
P	PLC	Programmable Logic Controller. A Controller which performs sequential control using programs of logical, order and arithmetic operation, etc.
P	PNP input	Input that receives data from sensor with PNP output signal.
P	PNP output	Output that switches a load through a PNP transistor. The –ve side of the load is connected to the 0V common return. For this reason, PNP output is often referred to as “common negative”.
P	Protection Class (IP□□)	International Protection Rating. A standard related to protection against the intrusion of foreign objects into electrical enclosures. (Hands, wires, dust, water, etc.)
R	Remote Device station	A station that can use Bit Data and Word Data. This is a generic name given for a slave station which consist of digital inputs, digital outputs, etc.
S	Short circuit detection	Function that detect if output or power supply positive line is short circuited with GND Line, thus over current state has occurred.
S	Short circuit protection	Internal circuit protection to prevent damage by over current caused by power supply positive line being short circuited with GND
S	Station number	On the CC-Link network, the master station is numbered as 0, and the connected slave station is assigned to be number 1 to 64. The slave station number should be assigned so as not to duplicate a station number.
T	Terminating resistance	When connecting devices to the Fieldbus, a resistance must be installed on both ends of the wiring system. This prevents signal reflection, and maintains data integrity.
U	U Side	The UP side of the manifold, where solenoid valve manifold is connected.
V	Ver.2.00	Ver.2.00 indicates [CC-Link Ver.2.00]. The sending and receiving of large number of data and the multi channel Analog/digital conversion, etc. is possible.

Assembly

Composing the unit as a manifold.

*: If the unit was purchased as a manifold, the work described in this section is not necessary.

> **Note**
>
> Be sure to turn off the power when carrying out the work to compose the unit as a manifold.

(1) Connect the unit to the end plate

Digital input unit/digital output unit/Analog unit can be connected in any order.

Tighten the bracket of the joint using tightening torque: 0.7 to 0.8 N·m.

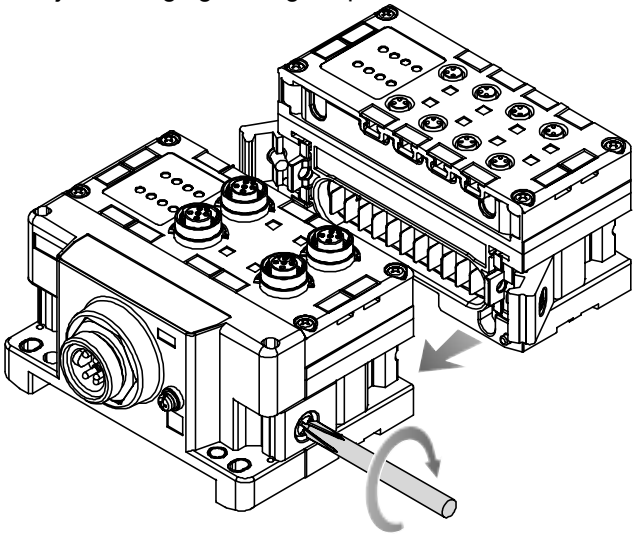

(2) Add more units

Up to 10 units (including the SI unit) can be connected to one manifold.

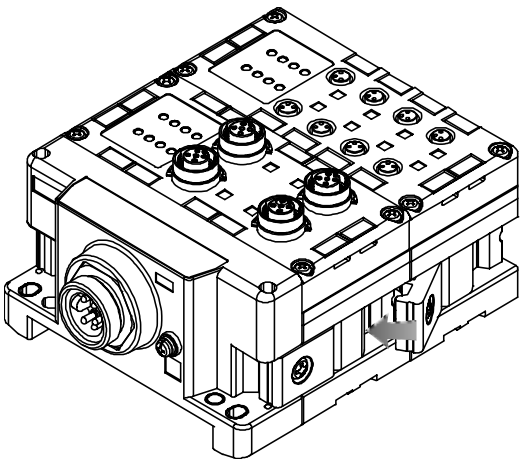

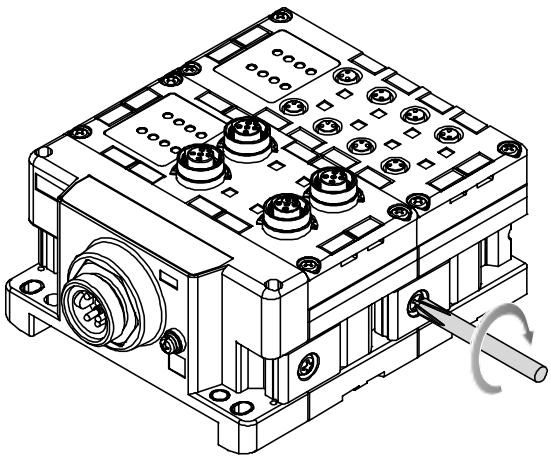

(3)Connecting SI unit

After connecting the necessary units, connect the SI unit.

Connecting method is the same as above.

(4) Mounting the valve plate

Mount the valve plate to the manifold solenoid valve using the valve set screws.

Apply 0.6 to 0.7N•m tightening torque to the screws.

Screw mounting place
SV　: 2 places
S070 : 2 places
VQC1000 : 2 places
VQC2000 : 3 places
VQC4000 : 4 places

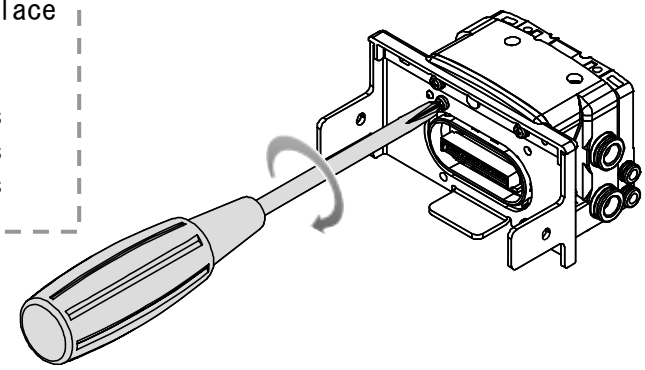

(5) Connect SI unit and the manifold solenoid valve.

Insert the valve plate to the valve plate set groove on the side of SI unit.

Then, tighten it with the valve plate set screws to fix the plate.

Tightening torque for set screws 0.7 to 0.8N•m.

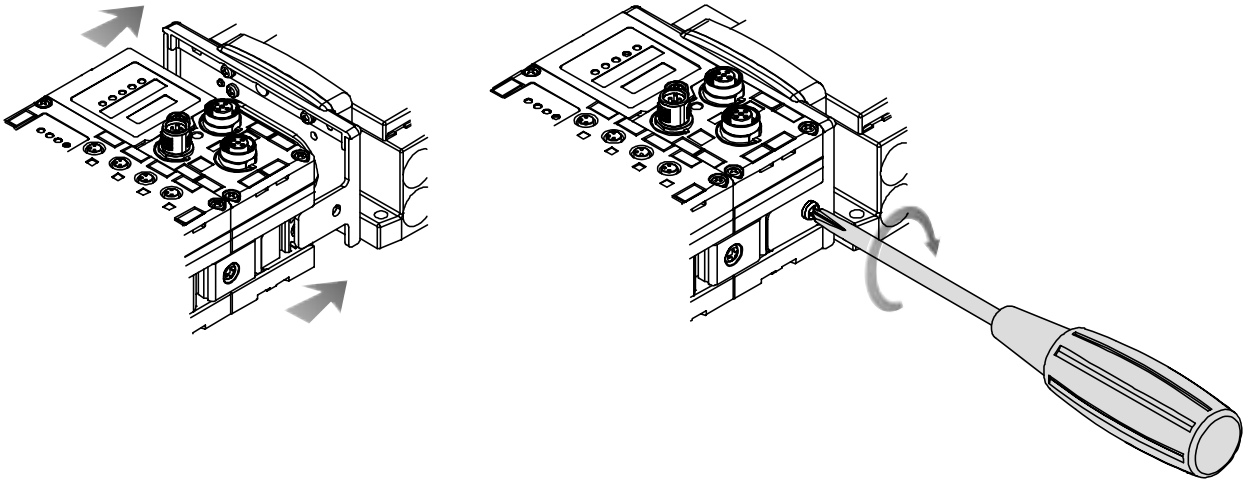

Note:
Please do not connect the unit while the power supply is active.
It will cause equipment damage.

Mounting and Installation

• Installation method

(1) Direct mounting

When joining six or more units, fix the middle part of the complete EX600 unit with an intermediate reinforcing brace (EX600-ZMB1) before mounting (Refer to the figure below.) using 2 M4 screws (Tightening torque: 0.7 to 0.8 N•m)

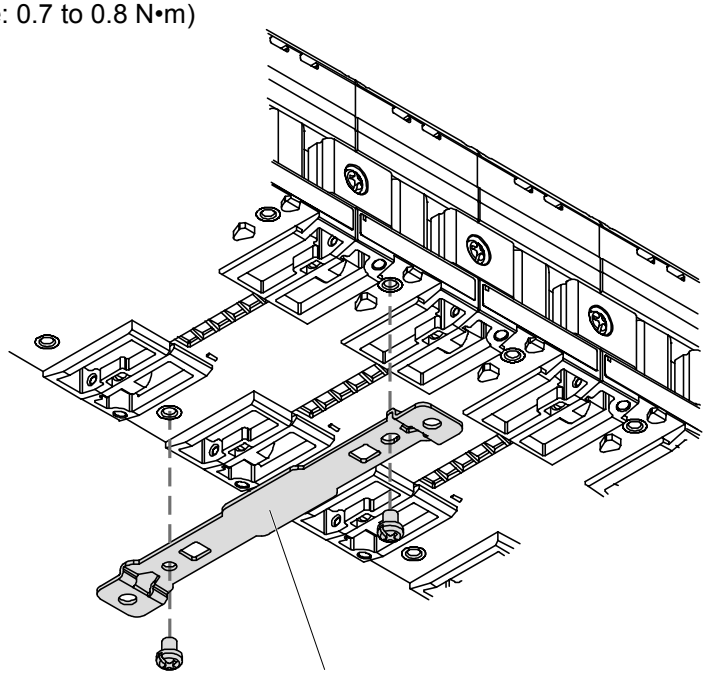

Fix and tighten the end plates at one end of the unit as shown in the figure below.
(Tightening torque: 0.7 to 0.8 N•m)
Fix the end plate at the valve side while referring to the operation manual of the corresponding manifold valve.

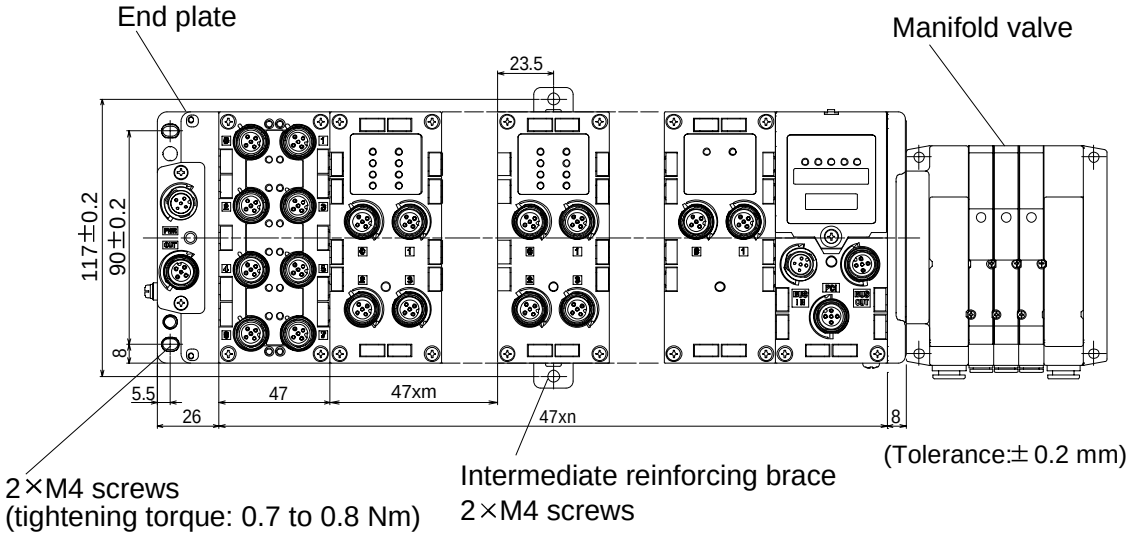

(2) DIN rail mounting

(i) When joining five or more units, fix the middle part of the complete EX600 unit with an intermediate reinforcing brace (EX600-ZMB2) before mounting, using 2xM4 screws (Tightening torque: 0.7 to 0.8 N•m)

(ii) Mount the end plate bracket (EX600-ZMA2) to the end plate, using 2xM4 screws (Tightening torque: 0.7 to 0.8 N•m)

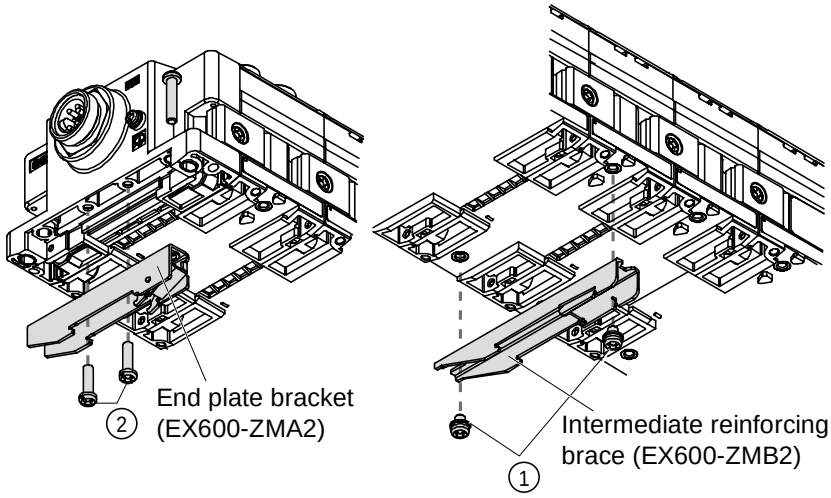

(iii) Hook the DIN rail mounting groove to the DIN rail. (See the figure below.)

(iv) Press the manifold using its side hooked to the DIN rail as a fulcrum until the manifold is locked.

(v) Fix the manifold by tightening the DIN rail fixing screws of the EX600-ZMA2.

(Tightening torque: 0.7 to 0.8 Nm)

The tightening torque at the valve side depends on the valve type.

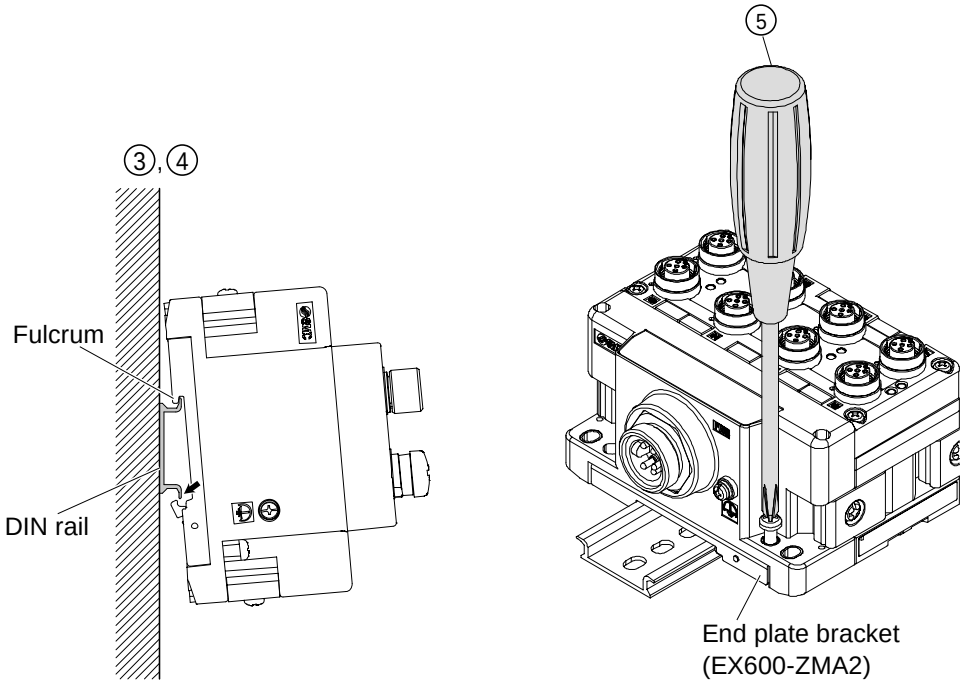

• Wiring

The M12 connector can be mated with a SPEEDCON connector or standard M12 connector.

(1) Set the projected portion of the cable connector metal ring (plug / socket) to the mark.

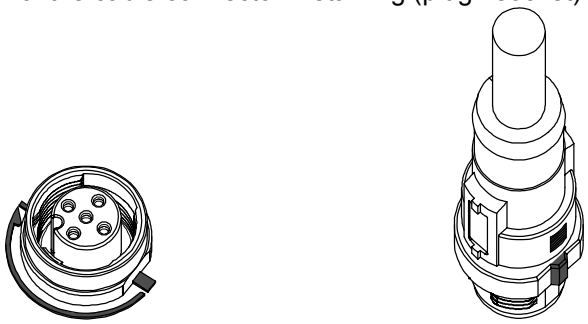

(2) Push the connector straight to insert it into the receptacle of the unit. If inserted without aligning the mark, the connector will not mate with the receptacle.

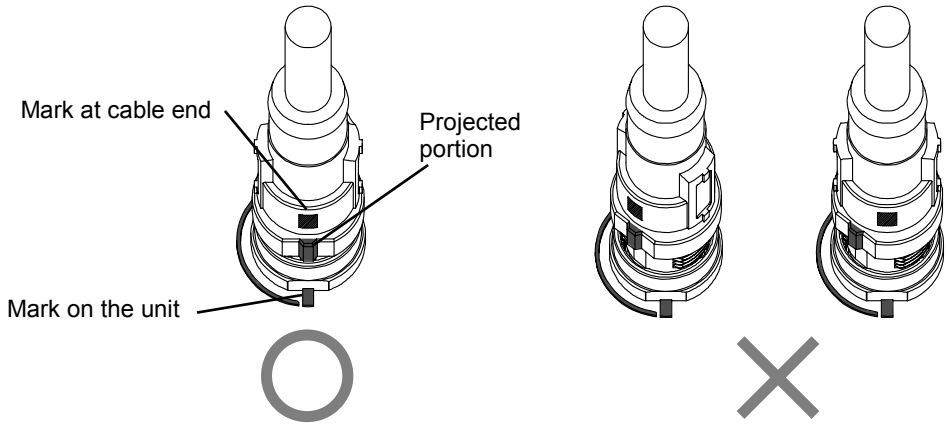

(3) Turn the connector clockwise. It stops when turned 1/4 turn.Turn it further. When the connector is turned 1/2 turn from the original position, the projected portion is set at the diagonal position to the mark and the turn is completed.
Check that the connector is securely locked.

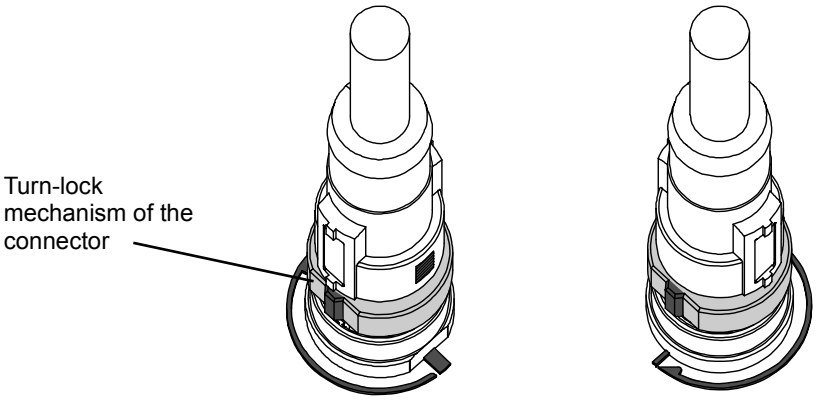

If the connector is turned excessively, it will become difficult to remove.

• Mounting the marker

Mount the marker (EX600-ZT1) into the marker groove as required.

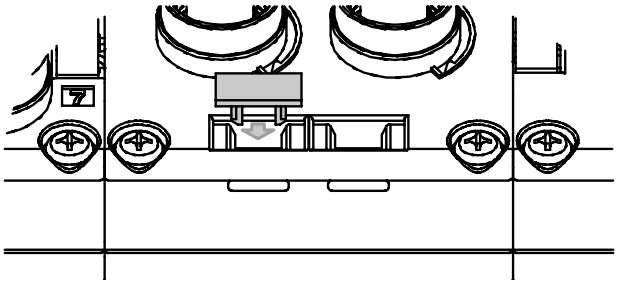

How to order

EX600 – S □□

SI Unit

Protocol

Symbol	Description
MJ	CC-Link

Output polarity

Symbol	Description
1	PNP(-COM.)
2	NPN(+COM.)

Name and Function of the Parts

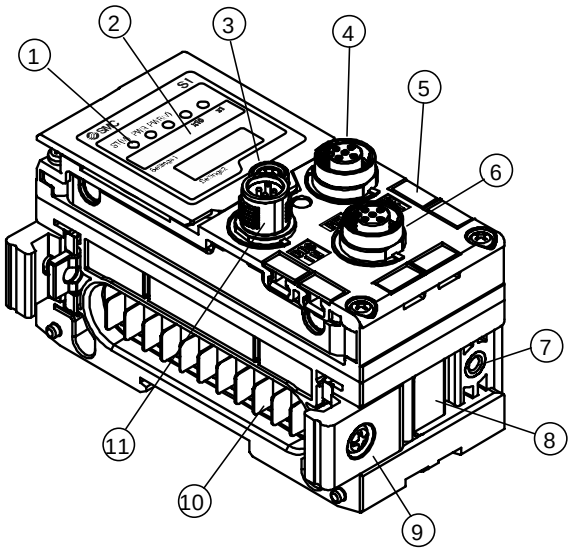

No.	Name	Description
1	Status indication LED	Indicates the unit status
2	Indication cover	Open to gain access to the Setting switches
3	Indication cover set screw	Loosen to open the cover
4	Connector(BUS OUT)	Connector for Fieldbus output
5	Marker groove	Groove to mount an indication marker
6	Connector (H.T.)	Connector to connect handheld terminal
7	Valve plate mounting hole	Holes for fixing the valve plate
8	Valve plate mounting groove	Groove for mounting the valve plate
9	Joint bracket	Bracket used to secure the adjacent unit
10	Connector for unit (Plug)	Conveys the signals and power supply to the adjacent unit
11	Connector (BUS IN)	Connector for Fieldbus input

• Display indicator and description

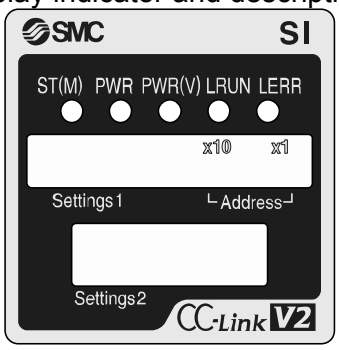

Indicator	Description
ST(M)	Unit diagnostics status
PWR	Displays the power supply voltage status of the power supply for control and input
PWR(V)	Displays the power supply voltage status of the power supply for output
LRUN	Displays the Data Link status
LERR	Displays the Error status

Mounting and Installation

Connector Pin Assignment

Pin No.	Signal name	Configuration	
		BUS IN	BUS OUT
1	SLD	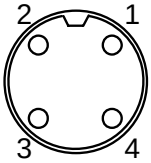	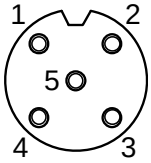
2	DB		
3	DG		
4	DA		
5	NC		

EX600-SMJ1/2 internally implements the branch connection as illustrated on the below circuit.
When extending the network with other CC-Link products, connect using the BUS OUT connector, to increase the number of CC-Link slaves.

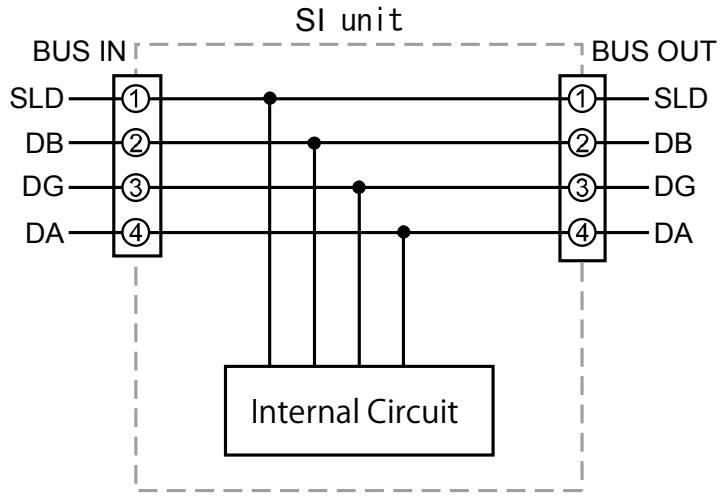

Note
A terminating resistance must be connected to both ends of the CC-Link trunk line.
Be sure to place a seal cap on any unused connectors.
Placing the seal cap appropriately enables the unit to achieve IP67 protection.

•Terminating Resistance

On the CC-Link system, the terminating resistance connected differs depending on which cable is used. Please refer to the table below.

Cable type	Resistance value	Terminal resistance model number (manufacturer name)
Communication cable for CC-Link PCA-1567720 (Socket) PCA-1557717 (Plug)	110Ω 1/2W	- VA-4DCC-110 (Correns) - CC100 (Woodhead Japan)
CC-Link dedicated high performance cable	130Ω 1/2W	- VA-4DCC-130 (Correns)

Setting and Adjustment

• Setting procedure

(1) Loosen the screw of the switch protection cover (indicated with an arrow).

(2) Open the cover with a flat blade screwdriver.

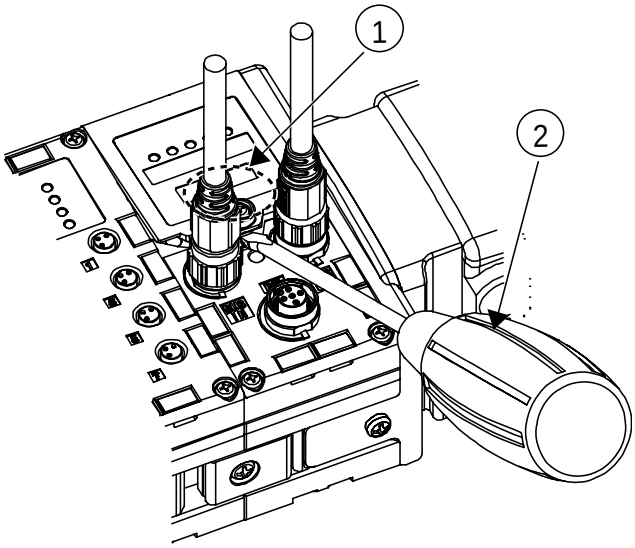

(3) Perform the switch settings referring to the following pages.
Set the switches with a small point precision screwdriver.

(4) After setting the switches close the switch protection cover and tighten the screw in the reverse order to the above. (Tightening torque: 0.3 to 0.4 Nm)

Note

• When adjusting the switch, make sure not to touch other parts other than the setting switch. Failure can be caused by damaged parts or short circuit.

• Be sure to perform the switch settings with the power turned OFF.

• All switches are set to OFF or 0 when delivered (Factory setting). Perform the switch settings before use.

• When any foreign matter or water droplets are observed near the switch protection cover, wipe them off before opening the cover.

○ Terminal number setting switch

Use these switches to set the Terminal Number
The switch settings will become effective when the power supply is turned ON.

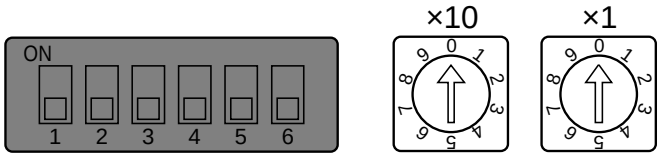

Setting1 Address

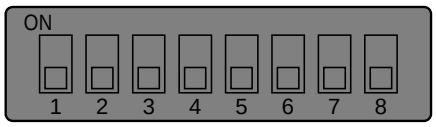

Setting2

Terminal Number setting

Address SW		Terminal No.
×10	×1	
0	0	Err(factory setting)
0	1	1
0 ~ 6	2 ~ 3	2 ~ 63
6	4	64
6 ~ 9	5 ~ 9	Err

Note) Setting to 00 or a number more than 64, will cause an error and the “LERR” LED will flash.

The setting range depends on the number of occupied terminals.
(Refer to the following table)

Number of occupied terminals	Available ADDRESS
1	1~64
2	1~63
3	1~62
4	1~61

Note) The setting of the number of occupied stations is made using the select switch.

○ Setting1 switch

The switch settings will become effective when the power supply is turned ON

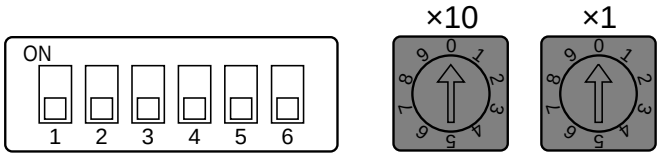

Setting1 Address

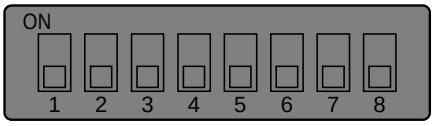

Setting2

Operation mode selection switch：To set the CC-Link Version and number of occupied stations.

Operation Mode	Setting1			Description				
	No.1	No.2	No.3	CC-Link Version	Number of occupied terminal	Bit area I/O points	Word area I/O size (RWr/Rww)	Extended cyclic times (Ver2.00 only)
1[Note1)]	OFF	OFF	OFF	1.10	1	32/32	4word/4word	-
2	ON	OFF	OFF	1.10	2	64/64	8word/8word	-
3	OFF	ON	OFF	1.10	3	96/96	12word/12word	-
4	ON	ON	OFF	1.10	4	128/128	16word/16word	-
5	OFF	OFF	ON	2.00	1	64/64	32word/32word	4
6	ON	OFF	ON	2.00	1	128/128	32word/32word	8
7	OFF	ON	ON	2.00	2	384/384	64word/64word	8
8	ON	ON	ON	2.00	3	640/640	96word/96word	8

Note1) Factory default setting is operation mode 1.

Note2) 1 Word is 16 bit.

Note3) It is not possible to use a bit area's last register (16 bit) because it is allocated in the system area.

Data Rate switch: Switches to set the Baud Rate of the CC-Link communication.

Setting1			Description
No.4	No.5	No.6	
OFF	OFF	OFF	156kbps (Factory setting)
ON	OFF	OFF	625kbps
OFF	ON	OFF	2.5Mbps
ON	ON	OFF	5Mbps
OFF	OFF	ON	10Mbps
ON	OFF	ON	Settings other than the above will cause an error and the "LERR" LED will flash.
OFF	ON	ON	
ON	ON	ON	

○ Setting2 switch

The switch settings will become effective when the power supply is turned ON.

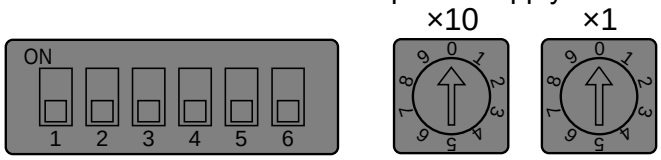

Setting1 Address

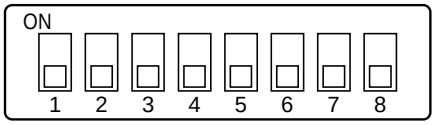

Setting2

V_SEL switch: Switches to select the number of points occupied by valve outputs.
Select the output points (size) occupied by the SI unit.

Setting1		Description	SI unit Output data size
No.1	No.2		
OFF	OFF	Occupied bit for valve output is 32	4byte(Factory setting)
OFF	ON	Occupied bit for valve output is 24	3byte
ON	OFF	Occupied bit for valve output is 26	2byte
ON	ON	Occupied bit for valve output is 8	1byte

Note) Please set the number of occupied valve points to more than the connected number of valves

Baud Rate switch: Switches to set the baud rate of internal communication

Setting1		Description
No3.	No.4	
OFF	OFF	1Mbps(factory setting)
OFF	ON	500kbps
ON	OFF	250kbps
ON	ON	125kbps

Note) 500, 250 & 125kbps settings are for future extension. Please use 1 Mbps (factory default setting)

Diagnostics switches Mapping of diagnostic data to input data.

Setting2		Diagnostic Mode	Description	Status size to be set to the input word area
No.5	No.6			
OFF	OFF	0	Input data only (factory setting)	0 word
OFF	ON	1	Input data + System diagnostic	2 word
ON	OFF	2	Input data + System diagnostic + Unit diagnostic (max.10 units)	3 word
ON	ON	3 Note1)	Input data + System diagnostic + Unit diagnostic (max.64 units)	4 word

Note 1)Mode 3 is used for future extension functions. It is currently not available

HOLD/CLEAR switch:

Switch to set Hold/Clear of output when Fieldbus communication error occurs.
This setting can be made invalid (over-ridden) by the software parameter.
(Refer to page66)

Setting2 No.7	Description
OFF	Clears the output when a Fieldbus communication error occurs. (Factory setting)
ON	Holds the output when a Fieldbus communication error occurs

Manifold configuration memory switch:

When the manifold configuration memory switch is set ON and the power is switched ON, the system will compare the stored configuration with the manifold configuration If the configuration is different, a diagnostic error will be generated.

Setting2 No.8	Contents
OFF	Normal operation mode (factory default setting)
ON	Manifold configuration memory mode

Storing of the manifold configuration.

When supplying power to the unit with the switch set to ON, the manifold configuration will be stored into memory. The power should then be disconnected and the switch turned OFF before continuing normal operation.

Comparison of the manifold configuration.

When supplying power to the unit with the switch set to OFF, the manifold configuration is compared with the last stored configuration. A diagnostic error will be produced if the configurations are not the same.

Error display

SI unit common status

LED status	Descriptions
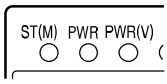	Power supply for control and input is OFF.
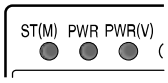	Unit is operating normally.
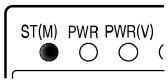	Component failure inside the SI unit. When ST (M) indicator is red, stop using the product and contact SMC.
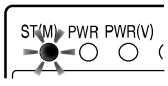	Valve is in short-circuit or open-circuit status. Replace the valve. (When Open/Short-circuit detection mode is ON)
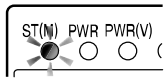	Communication error between units or configuration memory error. Check the connection between units, or unit configuration.
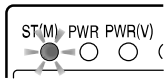	Error diagnostic detected the error of a unit other than the SI unit.
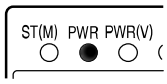	Abnormal power voltage for control/input devices. Check the power supply and adjust or replace it.
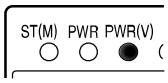	Abnormal power voltage for valve/output devices. Check the power supply and adjust or replace it.

OFF

Red Light ON

Green Light ON

Flashing Red

Flashing Red and Green alternately (1 second frequency)

Flashing Green

LED status	Descriptions
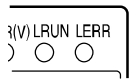	Not in communication, or unit power is in OFF status.
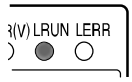	Communicating normally.
	Terminal number switch setting or Baud rate switch setting was changed with power ON. Change the settings back to the original setting, or restart the system.
	Communication error. Terminal number is set to “0” (zero) or above “64”, or Baud rate switch is set beyond the specification. Check the switch settings and revise it if necessary.

○ OFF ● Red Light ON ● Green Light ON

Flashing Red

Specifications

• Specifications

Model		EX600-SMJ1	EX600-SMJ2
Communication	Fieldbus	CC-Link (Ver.1.10, Ver.2.00)	
	Device type	Remote Device station	
	Communication speed	156/625kbps 2.5/5/10Mbps	
	I/O occupation area (Inputs/Outputs)	(512 points/512 points) max 1 Station /2 Stations /3 Stations /4 Stations occupied	
Internal Current Consumption (Power supply for Control and Input)		Less than 75mA	
Valve output	Output method	PNP(-COM)	NPN(+COM)
	Output channel	32 channels (8/16/24/32 channels selectable)	
	Connected load	Solenoid valve with lamp and circuit of protection of surge voltage of DC24V 1.5W (SMC)	
	Supply voltage	DC24V +10/-5%	
	Output for com. error	HOLD/CLEAR/ Force ON	
	Protective function	Short-circuit protective	
Environmental resistance	Enclosure	IP67(manifold assembly)	
	Operating temp. range	-10~50°C	
	Operating humidity range	35~85%RH (no dew condensation)	
	Withstand voltage	AC500V for 1 min. between external terminals and FE	
	Insulation resistance	DC500V, 10MΩ or more between external terminals and FE	
	Vibration resistance	10~57Hz with constant amplitude of 0.75mm p-p 57-150Hz with constant acceleration of 49m/s^2 for 2 hours in each direction of X, Y and Z direction (during de-energizing)	
	Impact resistance	147m/s^2 3 times in each direction of X, Y and Z (during de-energizing)	
Standards		CE marking, UL recognition (CSA)	
Weight		300 g	

• Outline Dimensions

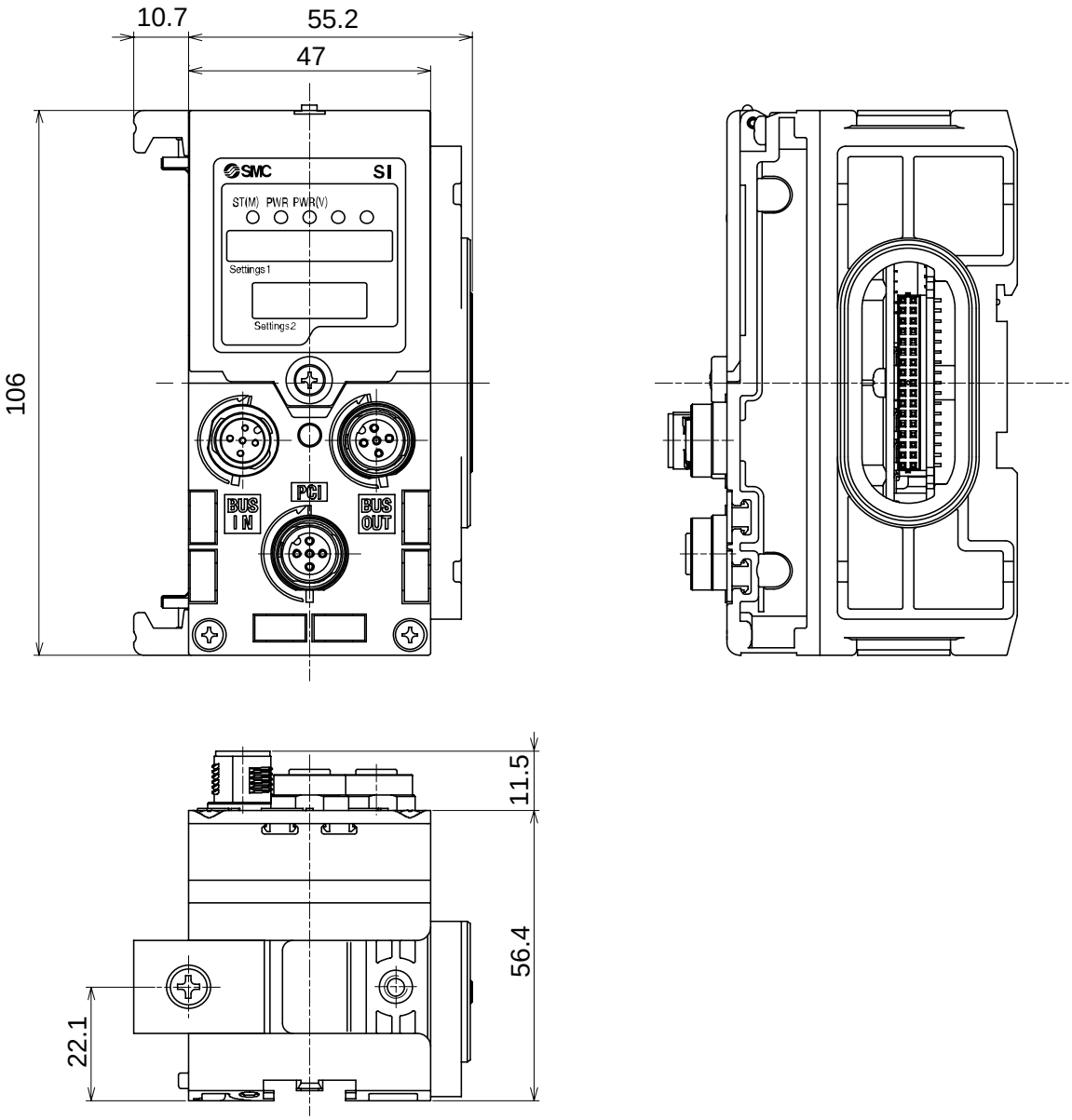

Digital input unit

How to order

EX600 – DX □ □

Digital input

Input polarity

Symbol	Description
P	PNP
N	NPN

Connector and input points and open circuit detection

Symbol	Connector	Input points	Open circuit detection
B	4 x M12 (5Pin)	8 points	No
C	8 x M8 (3Pin)	8 points	No
C1	8 x M8 (3Pin)	8 points	Yes
D	8 x M12 (5Pin)	16 points	No

Note: Sensor with M12 (4 pin) connector can also be connected to M12 (5pin) connector.

Name and Function of the Parts

EX600-DX*B

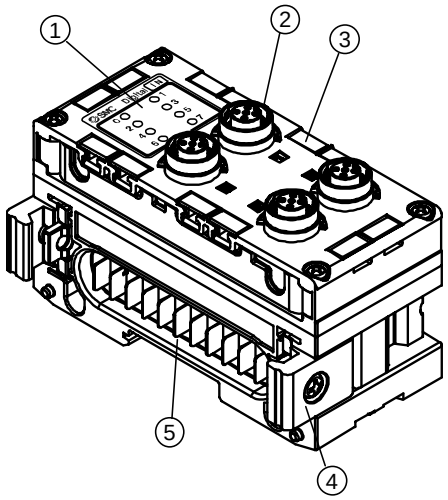

No.	Name	Description
1	Status indication LED	Indicates the unit status. (Refer to the chapter “Troubleshooting” for the detailed display contents.)
2	Connector (Input)	Connector for digital inputs. (M12, 5pin, socket : SPEEDCON)
3	Marker groove	Groove to mount an indication marker.
4	Joint bracket	Joint bracket to join the adjacent unit, fixed with attached screws.
5	Connector for unit (plug)	Conveys the signals and power supplies to the adjacent unit.

EX600-DX*C*

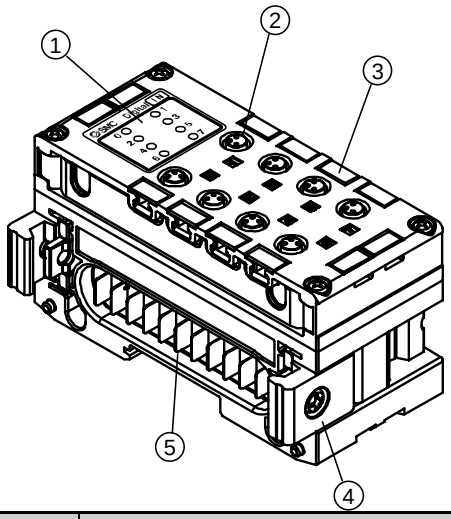

No.	Name	Description
1	Status indication LED	Indicates the unit status. (Refer to the chapter “Troubleshooting” for the detailed display contents.)
2	Connector (Input)	Connector for digital inputs. (M8, 3pin, socket)
3	Marker groove	Groove to mount an indication marker.
4	Joint bracket	Joint bracket to join the adjacent unit, fixed with attached screws.
5	Connector for unit (plug)	Conveys the signals and power supplies to the adjacent unit.

EX600-DX*D

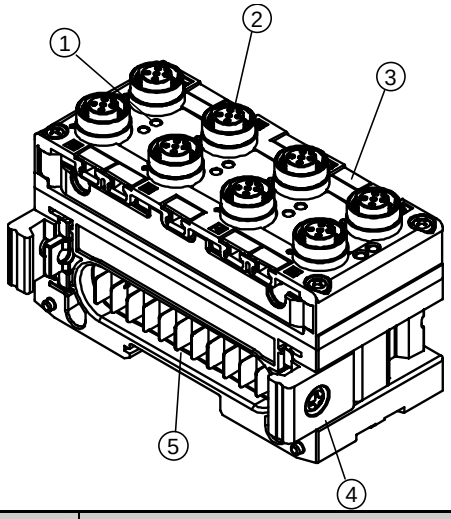

No.	Name	Description
1	Status indication LED	Indicates the unit status. (Refer to the chapter “Troubleshooting” for the detailed display contents.)
2	Connector (Input)	Connector for digital inputs. (M12, 5pin, socket : SPEEDCON)
3	Marker groove	Groove to mount an indication marker.
4	Joint bracket	Joint bracket to join the adjacent unit, fixed with attached screws.
5	Connector for unit (plug)	Conveys the signals and power supplies to the adjacent unit.

Pin assignment and wiring diagram

(1) EX600-DX*B/EX600-DX*D

○Connector's Pin assignment

Pin No.	Signal name	Configuration
1	24V(for control / input)	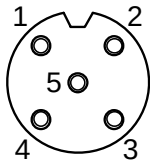
2	Input2	
3	0V(for control / input)	
4	Input1	
5	FE	

Note: Sensor with M12 (4 pin) connector can also be connected to M12 (5pin) connector.

○ Wiring diagram

EX600-DXPB/ EX600-DXPD

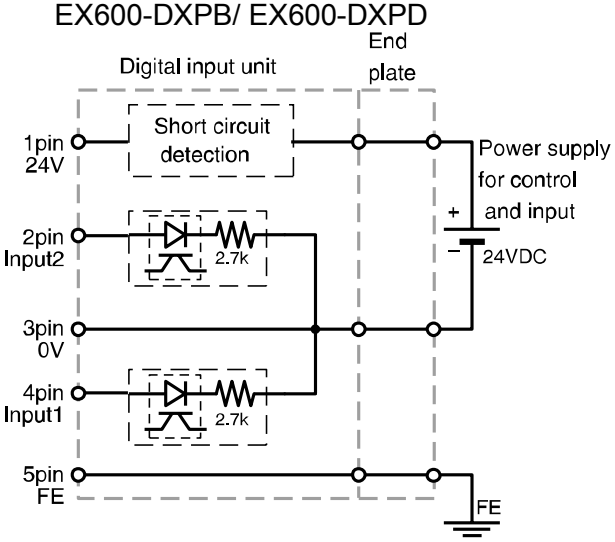

EX600-DXNB/ EX600-DXND

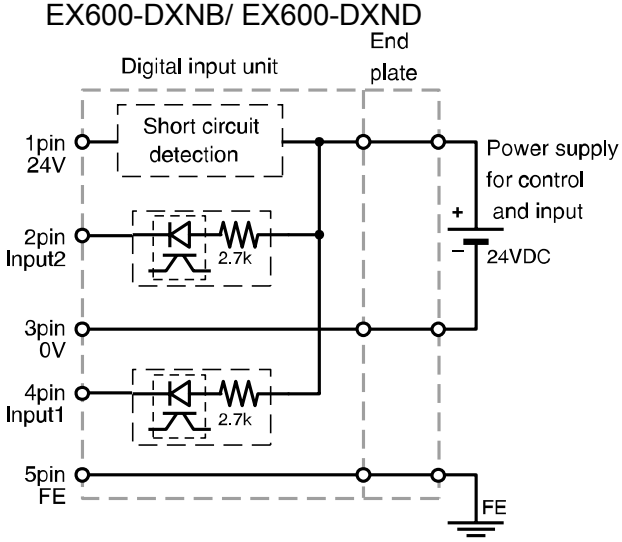

Note

Be sure to place a seal cap on any unused connectors. Using the appropriate seal cap enables the unit to achieve IP67 protection.

(2) EX600-DX*C*

○ Connector's pin assignment

Pin No.	Signal name	Configuration
1	24V(for control / input)	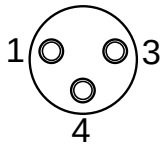
3	0V(for control / input)	
4	Input1	

○ Wiring diagram

EX600-DXPC*

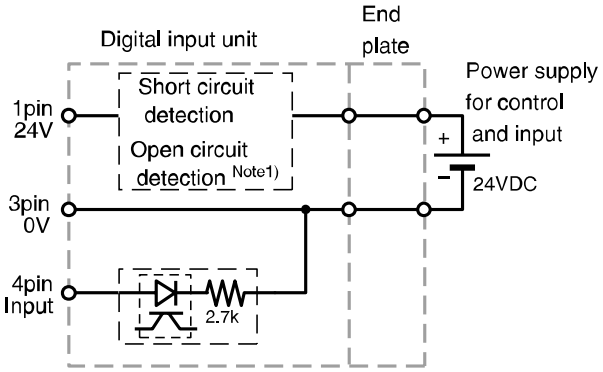

Note1)Applicable only for EX600-DXPC1.

EX600-DXNC*

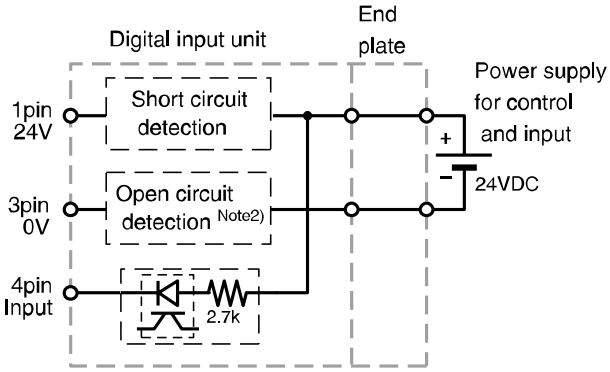

Note2): Applicable only for EX600-DXNC1.

Note

Be sure to place a seal cap on any unused connectors. Using the appropriate seal cap enables the unit to achieve IP67 protection.

■Handling care.

Please note the following points below when using Open Circuit Detection function.

- Open Circuit Detection setting can only be carried out using a Handheld Terminal. Setting cannot be carried out at the PLC.
- When a 2-wire sensor is used, a sensor which has a current leakage during OFF time of less than 0.5 mA (contact sensor, etc.) will not be detected. Please use a sensor which has a current leakage of 0.5 mA or more during OFF time.
- When a 3-wire sensor is used, a sensor that has a current consumption of less than 0.5 mA will not be detected, and also an open circuit (wire breakage) will not be detected.

Error display

Status indication LED displays power supply status and communication status. These can be checked according to the following:-

LED status	Descriptions
○ OFF	Power supply for control and input is OFF, or input device is OFF.
● Green Light ON	Input device is ON.
 Flashing Red	Either of the following: (1) Input device ON/OFF count has exceeded the set value. (2) Input device not connected (for open circuit detection type only).
 All LED Flashing Red and Green alternately	Component failure inside the digital input unit. Stop using the product and contact SMC.
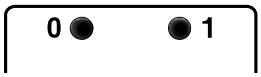 Red Light ON (Both adjacent LED's are ON)	**<without Open Circuit Detection>** Short circuit in power line of either input device “0” or “1”. Check which input device has caused the short circuit.
 Red Light ON (Either one of adjacent LED's is ON)	**<with Open Circuit Detection>** Short circuit in power line of input device indicated.

Specifications

• Specifications

Model			EX600-DXPB	EX600-DXNB	EX600-DXPC□	EX600-DXNC□	EX600-DXPD	EX600-DXND
Input Specifications	Input type		PNP	NPN	PNP	NPN	PNP	NPN
	Input connector		M12 (5Pin)socket Note1		M8 (3Pin)socket		M12 (5Pin)socket Note1	
	Input channels		8channels (2 channels/Connector)		8channels (1 channels/Connector)		16channels (2 channels/Connector)	
	Sensor supplied voltage		24VDC(Supplied from the power supply for control and inputs)					
	Maximum sensor supplied voltage		0.5A/Connector 2A/unit		0.25A/Connector 2A/unit		0.5A/Connector 2A/unit	
	Protection		Built-in short protection circuit					
	Input resistance		2.7 kΩ					
	Rated input current		Approx. 9 mA					
	ON voltage /ON current		17 V or more/ 5 mA or more (At NPN input, between the pin for input terminal and for sensor supplied voltage of +24 V) (At PNP input, between the pin for input terminal and for sensor supplied voltage of 0 V)					
	OFF voltage/OFF current		5 V or less/ 1 mA or less (At NPN input, between the pin for input terminal and for sensor supplied voltage of +24 V) (At PNP input, between the pin for input terminal and for sensor supplied voltage of 0 V)					
	Open circuit detection current Note2	2 wires	—		0.5mA/Point Note2		—	
		3 wires	—		0.5mA/Connector Note2		—	
Current consumption			50mA or less		55mA or less		70mA or less	
Indicator			Green LED on (Input is ON) Red LED on (when short circuit detected at sensor's power supply) Red LED flashing (ON/OFF counter exceeded/ open circuit detected Note2					
Environmental resistance	Enclosure		IP67(Manifold assembly)					
	Operating temp. range		-10~50°C					
	Operating humidity range		35~85%RH (no dew condensation)					
	Withstand voltage		AC500V for 1 min. between external terminals and FE					
	Insulation resistance		DC500V, 10MΩ or more between external terminals and FE					
	Vibration resistance		10~57Hz with constant amplitude of 0.75mm p-p 57-150Hz with constant acceleration of 49m/s^2 for 2 hours in each direction of X, Y and Z direction (during de-energizing)					
	Impact resistance		147m/s^2 3 times in each direction of X, Y and Z (during de-energizing)					
Standards			CE marking, UL recognition (CSA)					
Weight			300g		275g		340g	

Note 1：M12(4 pin)connector can be connected.

Note 2：Applicable only for unit with Open circuit detection function.

Digital Input data

The table shows the relation between the connector position and the input data allocation.

○Table for input signal (EX600-DX*B)

connector position		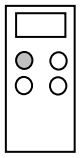	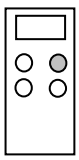	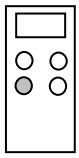	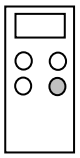
connector №		0	1	2	3
input signal	Pin 2	Bit 1	Bit 3	Bit 5	Bit 7
	Pin 4	Bit 0	Bit 2	Bit 4	Bit 6

○Table for input signal (EX600-DX*D)

connector position		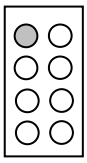	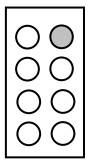	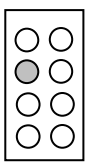	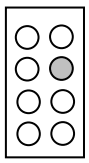	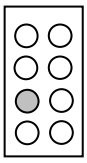	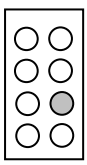	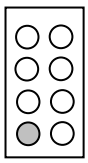	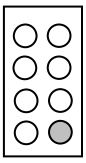
connector №		0	1	2	3	4	5	6	7
input signal	Pin 2	Bit 1	Bit 3	Bit 5	Bit 7	Bit 9	Bit 11	Bit 13	Bit 15
	Pin 4	Bit 0	Bit 2	Bit 4	Bit 6	Bit 8	Bit 10	Bit 12	Bit 14

○Table for input signal (EX600-DX*C*)

connector position		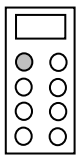	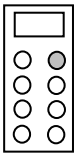	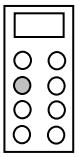	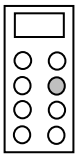	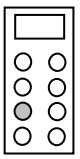	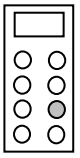	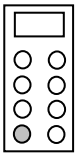	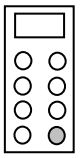
connector №		0	1	2	3	4	5	6	7
input signal	Pin 4	Bit 0	Bit 1	Bit 2	Bit 3	Bit 4	Bit 5	Bit 6	Bit 7

• Outline DImensions

EX600-DX*B

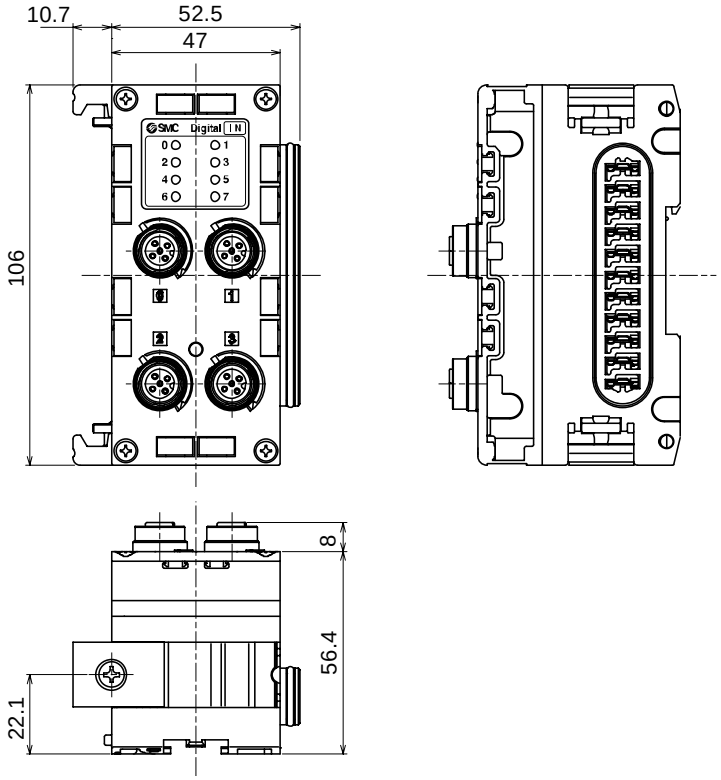

EX600-DX*C*

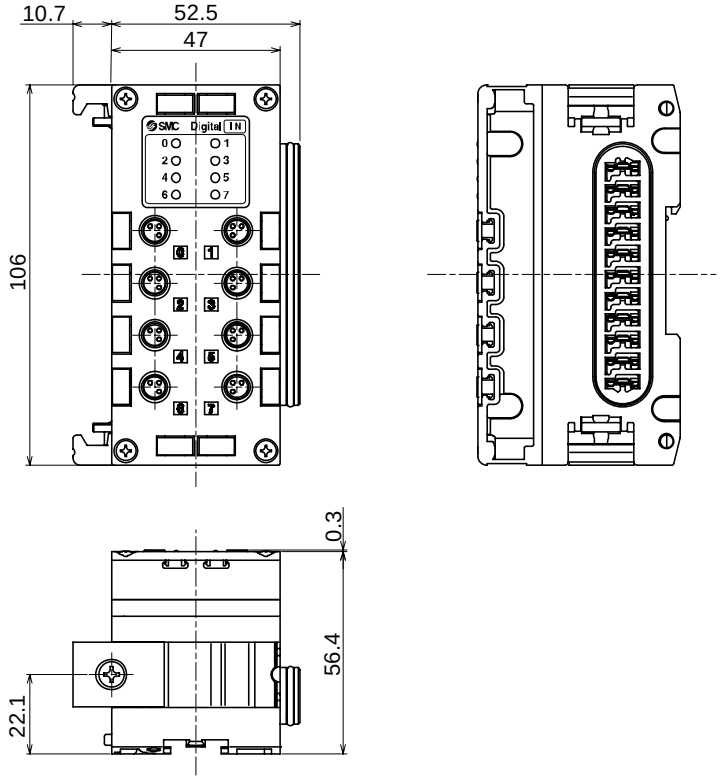

EX600-DX*D

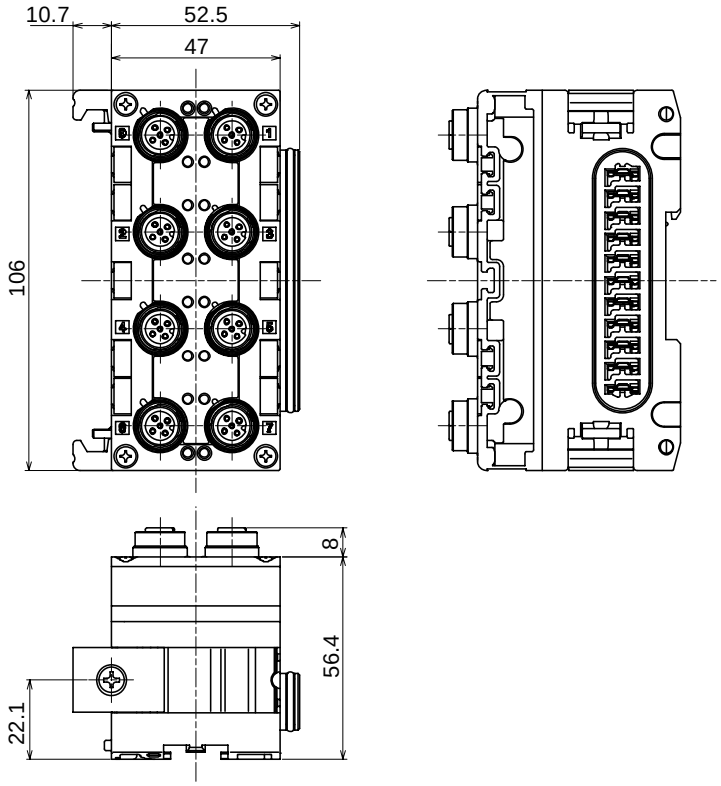

Digital Output unit

How to order

EX600 – DY □ □

Digital output

Output specification

Symbol	Description
P	PNP
N	NPN

Connector and number of channel

Symbol	Connector	Output channels
B	4 x M12(5Pin)	8 channels

Note：output equipment with 4 pin M12 connector can also be connected to M12 (5pin) connector。

Name and Function of the Parts

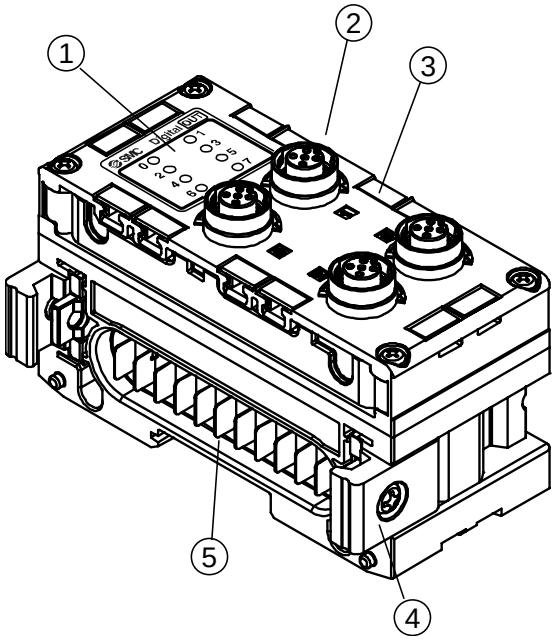

No.	Name	Description
1	Status indication LED	Indicates the unit status. (Refer to the chapter “Troubleshooting” for the detailed display contents.)
2	Connector (outputs)	Connector for digital outputs. (M12, 5pin, socket : SPEEDCON)
3	Marker groove	Groove to mount an indication marker.
4	Joint bracket	Joint bracket to join the adjacent unit, fixed with attached screws.
5	Connector for unit (plug)	Conveys the signals and power supplies to the adjacent unit.

•Connector's pin assignment and wiring diagram

○ Connector's pin assignment

Pin No.	Signal name		Configuration
	EX600-DYPB	EX600-DYNB	
1	NC	24V(For Output)	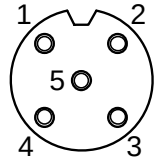
2	Output2	Output2	
3	0V(for Output)	NC	
4	Output1	Output1	
5	FE	FE	

Note : output equipment with M12 (4 pin) connector can also be connected to M12 (5pin) connector

○ Wiring Diagram

EX600-DYPB

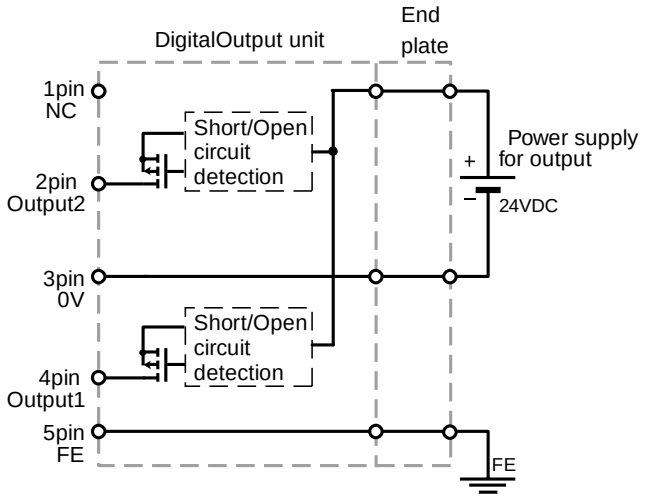

EX600-DYNB

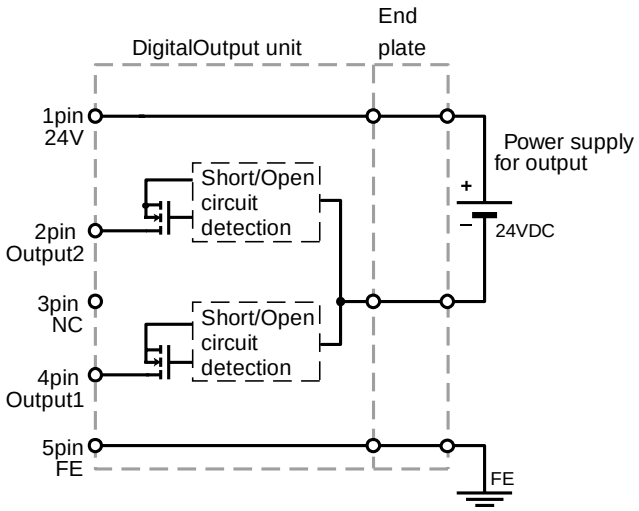

Note

Be sure to place a seal cap on any unused connectors. Using the appropriate seal cap enables the unit to achieve IP67 protection.

Handling care.

Please note the following points when using the Open Circuit Detection function.

- Open Circuit Detection setting can only be carried out using a Handheld Terminal. Setting cannot be carried out at the PLC.
- This function detects open circuit only when the output is OFF. Therefore if the output is turned ON, open circuit cannot be detected.

Error display

Status indication LED displays power supply status and communication status. These can be checked according to the following:

LED status	Descriptions
○ OFF	Power supply for control and input is OFF, or output device is OFF.
● Green Light ON	Output device is ON.
● Red Light ON	Output is short circuited.
 Flashing Red	Either of the following: Output device contact operations count has exceeded the set value. Output device is not connected.
 All LED Flashing Red and Green alternately	Component failure inside the digital output unit. Stop using the product and contact SMC.

Specifications

• Specifications

Model		EX600-DYPB	EX600-DYNB
Output Specification	Output style	PNP	NPN
	Output connector	M12(5Pin),Socket Note1	
	Output channel	8 channels (2 channels/connector)	
	Rated load voltage	24VDC(Supplied from Power supply for output)	
	Max. load current	0.5A/1 channel 2A/unit	
	Protection	Short circuit protection	
Current consumption		50mA or less	
Display		Green LED on (during output is ON) Red LED on (short circuit at load) Red LED flashing (ON/OFF counter is exceeded, or open circuit detected)	
Environmental resistance	Enclosure	IP67(Manifold assembly)	
	Operating temp. range	-10~50°C	
	Operating humidity range	35~85%RH (no dew condensation)	
	Withstand voltage	AC500V for 1 min. between external terminals and FE	
	Insulation resistance	DC500V, 10MΩ or more between external terminals and FE	
	Vibration resistance	10~57Hz with constant amplitude of 0.75mm p-p 57-150Hz with constant acceleration of 49m/s^2 for 2 hours in each direction of X, Y and Z direction (during de-energizing)	
	Impact resistance	147m/s^2 3 times in each direction of X, Y and Z (during de-energizing)	
Standards		CE marking, UL recognition (CSA)	
Weight		300g	

Note1 : 4 pin M12 connector can also be connected.

Digital Output data

The table shows the relation between the connector position and the output data allocation.

○Table for output signal (EX600-DY*B)

connector position		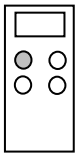	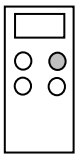	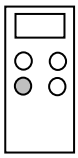	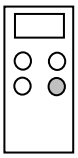
connector №		0	1	2	3
output signal	Pin 2	Bit 1	Bit 3	Bit 5	Bit 7
	Pin 4	Bit 0	Bit 2	Bit 4	Bit 6

• Outline Dimensions

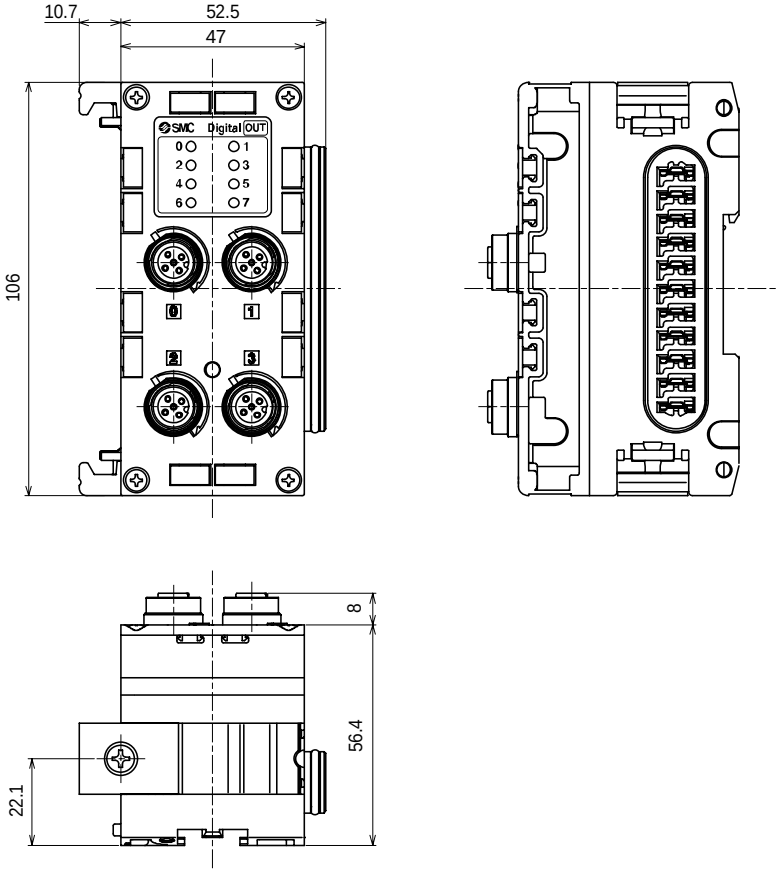

Analog Input Unit

How to order

EX600 – AX □

Analog input

Connector and Output channel

Symbol	Connector	Output channels
A	2 x M12(5Pin)	2 channel

Name and Function of the Parts

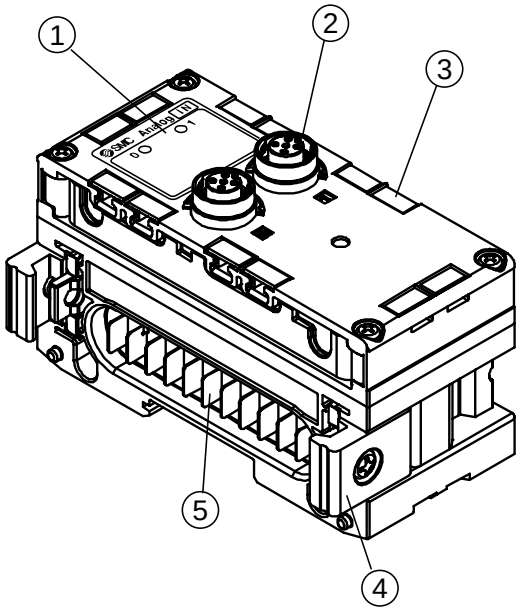

No.	Name	Description
1	Status indication LED	Indicates the unit status. (Refer to the chapter “Troubleshooting” for the detailed display contents.)
2	Connector (Input)	Connector for digital inputs. (M12, 5pin, socket : SPEEDCON)
3	Marker groove	Groove to mount an indication marker.
4	Joint bracket	Joint bracket to join the adjacent unit, fixed with attached screws.
5	Connector for unit (plug)	Conveys the signals and power supplies to the adjacent unit.

Pin Assignment and wiring diagram

○ Pin assignment

Pin No	Signal name	Configuration
1	24V(For Control/Input)	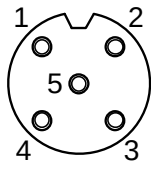
2	Input+	
3	0V(For Control/input)	
4	Input-	
5	FE	

○ Wiring diagram

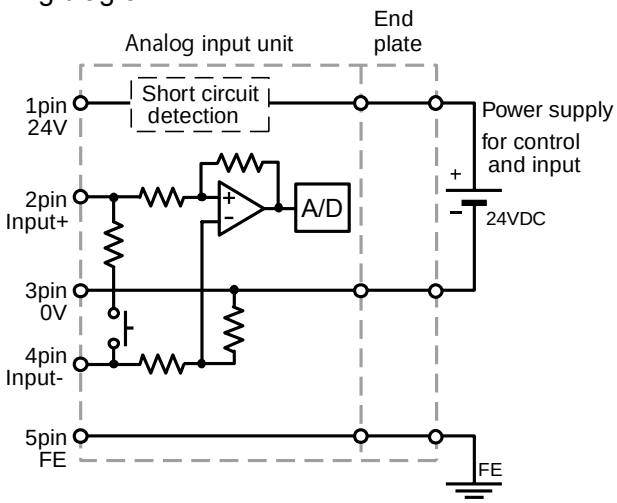

Input impedance

Voltage input type: 100kΩ

Current input type: 50Ω

Note

Be sure to place a seal cap on any unused connectors. Using the appropriate seal cap enables the unit to achieve IP67 protection.

■Handling care

Please note the following points when wiring the Analogue input unit and sensor.

The EX600 Analogue Input operates using a differential input specification, therefore pin No.4 (input -) becomes the reference and pin No.2 (input +) carries the signal data.

This means that, if pin No.4 is not connected, the signal input cannot be correctly input.

Therefore externally connect pin No.3 and pin No.4 together when a differential output sensor is not used.

•Sensor and wiring example is shown below

○When Analog input signal is referenced at GND

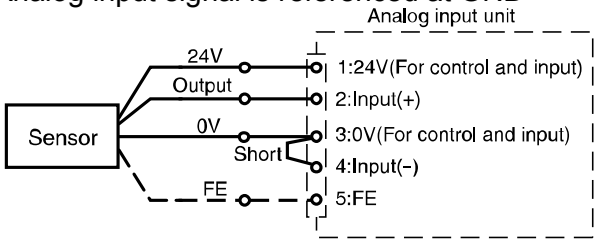

○When 2-wire current output type sensor is used.

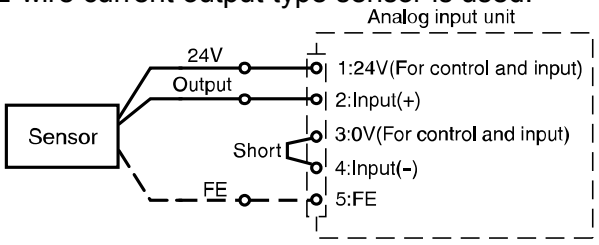

○When differential output type sensor is used

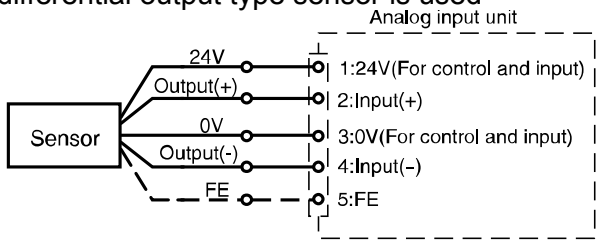

Error display

Status indication LED (see figure to the right) displays power supply status and communication status. These can be checked according to the following:-

LED status	Descriptions
○ OFF	Power supply for control and input is OFF.
● Green Light ON	Operating normally.
● Red Light ON	Power supply for input devices is short circuited.
Flashing Red	Upper or lower limit is detected for the following items: (1) Range (2)Measurement value(User setting)
All LED Flashing Red and Green alternately	Component failure inside the analog input unit. Stop using the product and contact SMC.

Specifications

• Specifications

Model			EX600-AXA	
Input Specifications	Input type		Voltage input	Current input
	Input connector		M12(5Pin), Socket	
	Input channels		2channel(1channel/Connector)	
	Sensor supplied voltage		DC24V (Supplied from power supply for control and input)	
	Maximum sensor supplied voltage		0.5A/channel	
	Protection		Short circuit protection	
	Input signal range	12bit Resolution	0 ~ 10V 1 ~ 5V 0 ~ 5V	0 ~ 20mA 4 ~ 20mA
		16bit Resolution	-10V ~ 10V (factory default setting) -5V~5V	-20mA ~ 20mA
	Max. input signal		±15V	±40mA
	Input impedance		100kΩ	50Ω
	Linearity		±0.05%F.S. or less	
	Repeatability		±0.15%F.S. or less	
	Absolute accuracy		±0.5%F.S. or less	±0.6%F.S.
Current consumption			70mA or less	
Display			Green LED on (when input is ON) Red LED on (Short circuit at sensor's power supply) Red LED flashing (analog input exceeds measurement range or user setting range)	
Environmental resistance	Enclosure		IP67(Manifold assembly)	
	Operating temp. range		-10~50°C	
	Operating humidity range		35~85%RH (no dew condensation)	
	Withstand voltage		AC500V for 1 min. between external terminals and FE	
	Insulation resistance		DC500V, 10MΩ or more between external terminals and FE	
	Vibration resistance		10~57Hz with constant amplitude of 0.75mm p-p 57-150Hz with constant acceleration of 49m/s^2 for 2 hours in each direction of X, Y and Z direction (during de-energizing)	
	Impact resistance		147m/s^2 3 times in each direction of X, Y and Z (during de-energizing)	
Standards			CE marking, UL recognition (CSA)	
Weight			290g	

•Analog characteristics

(1)Offset binary data format

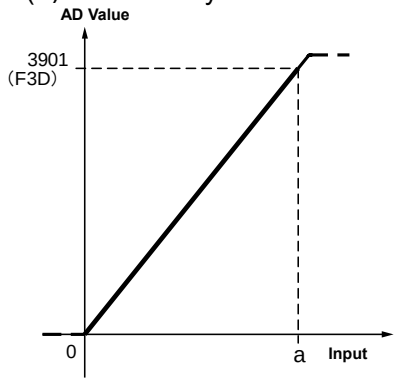

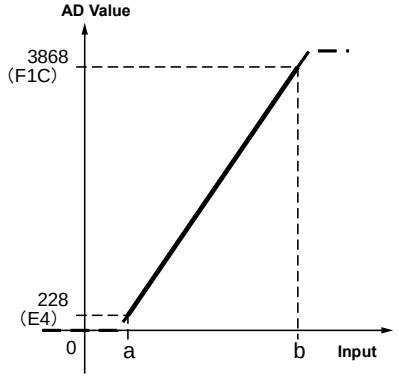

Input signal range	a
0 ~ 10V	10V
0 ~ 5V	5V
0 ~ 20mA	20mA

Input signal range	a	b
1 ~ 5V	1V	5V
4 ~ 20mA	4mA	20mA

Regarding AD value
In the above graph, 2 AD values are explained as below.
3901: AD value [decimal value]
(F3D): Offset Binary type ［hexadecimal value］

Data Format

15	14	13	12	11	10	9	8	7	6	5	4	3	2	1	0
0	0	0	0	MSB	AD value										LSB

AD value		0 ~ 10V	1 ~ 5V	0 ~ 5V	0 ~ 20mA	4 ~ 20mA
Hexadecimal	Decimal	Voltage [V]			Current[mA]	
0FFF	4095	10.5	5.25	5.25	21	21
0F3D	3901	10	-	5	20	-
0F1C	3868	-	5	-	-	20
0800	2048	5.25	3	2.625	10.5	12
00E4	228	-	1	-	-	4
0000	0	0	0.75	0	0	3

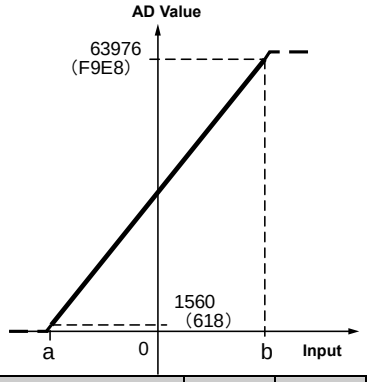

Input signal range	a	b
-10 ~ 10V	-10V	10V
-5 ~ 5V	-5V	5V
-20 ~ 20mA	-20mA	20mA

Data format

15	14	13	12	11	10	9	8	7	6	5	4	3	2	1	0
MSB							AD value								LSB

AD value		-10V ~ 10V	-5 ~ 5V	-20mA ~ 20mA
Hexadecimal	Decimal	Voltage [V]		Current [mA]
FFFF	65535	10.5	5.25	21
F9E8	63976	10	5	20
BCF4	48372	5	2.5	10
8000	32768	0	0	0
430C	17164	-5	-2.5	-10
0618	1560	-10	-5	-20
0000	0	-10.5	-5.25	-21

(2) Signed binary & 2's complements data format

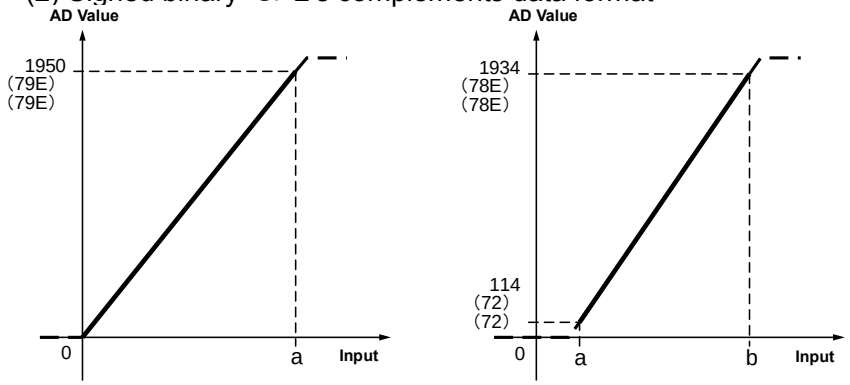

Input signal range	a
0 ~ 10V	10V
0 ~ 5V	5V
0 ~ 20mA	20mA

Input signal range	a	b
1 ~ 5V	1V	5V
4 ~ 20mA	4mA	20mA

Regarding AD value
In the above graph, 2 AD values are explained as below.
-31208: AD value［decimal value］
(F9E8): Sign & Magnitude［Hexadecimal value］
(8618): 2's complements［Hexadecimal value］

Data format

15	14	13	12	11	10	9	8	7	6	5	4	3	2	1	0
0	0	0	0	0	MSB	AD value									LSB

AD value		0 ~ 10V	1V ~ 5V	0 ~ 5V	0 ~ 20mA	4 ~ 20mA
Hexadecimal	Decimal	Voltage [V]			Current [mA]	
07FF	2047	10.5	5.25	5.25	21	21
079E	1950	10	-	5	20	-
078E	1934	-	5	-	-	20
0400	1024	5.25	3	2.625	10.5	12
0072	114	-	1	-	-	4
0000	0	0	0.75	0	0	3

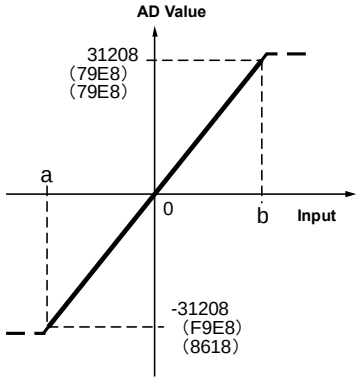

Input signal range	a	b
-10 ~ 10V	-10V	10V
-5 ~ 5V	-5V	5V
-20 ~ 20mA	-20mA	20mA

Data format

15	14	13	12	11	10	9	8	7	6	5	4	3	2	1	0
Sign	MSB							AD value							LSB

Signed Binary

AD value		-10V~10V	-5V~5V	-20mA~20mA
Hexadecimal	Decimal	Voltage [V]		Current [mA]
7FFF	32767	10.5*	5.25	21
79E8	31208	10	5	20
3CF4	15604	5	2.5	10
0000	0	0	0	0
BCF4	-15604	-5	-2.5	-10
F9E8	-31208	-10	-5	-20
FFFF	-32767	-10.5	-5.25	-21

2's complements

AD value		-10V~10V	-5V~5V	-20mA~20mA
Hexadecimal	Decimal	Voltage [V]		Current [mA]
7FFF	32767	10.5	5.25	21
79E8	31208	10	5	20
3CF4	15604	5	2.5	10
0000	0	0	0	0
C30C	-15604	-5	-2.5	-10
8618	-31208	-10	-5	-20
8000	-32767	-10.5	-5.25	-21

• Outline Dimensions

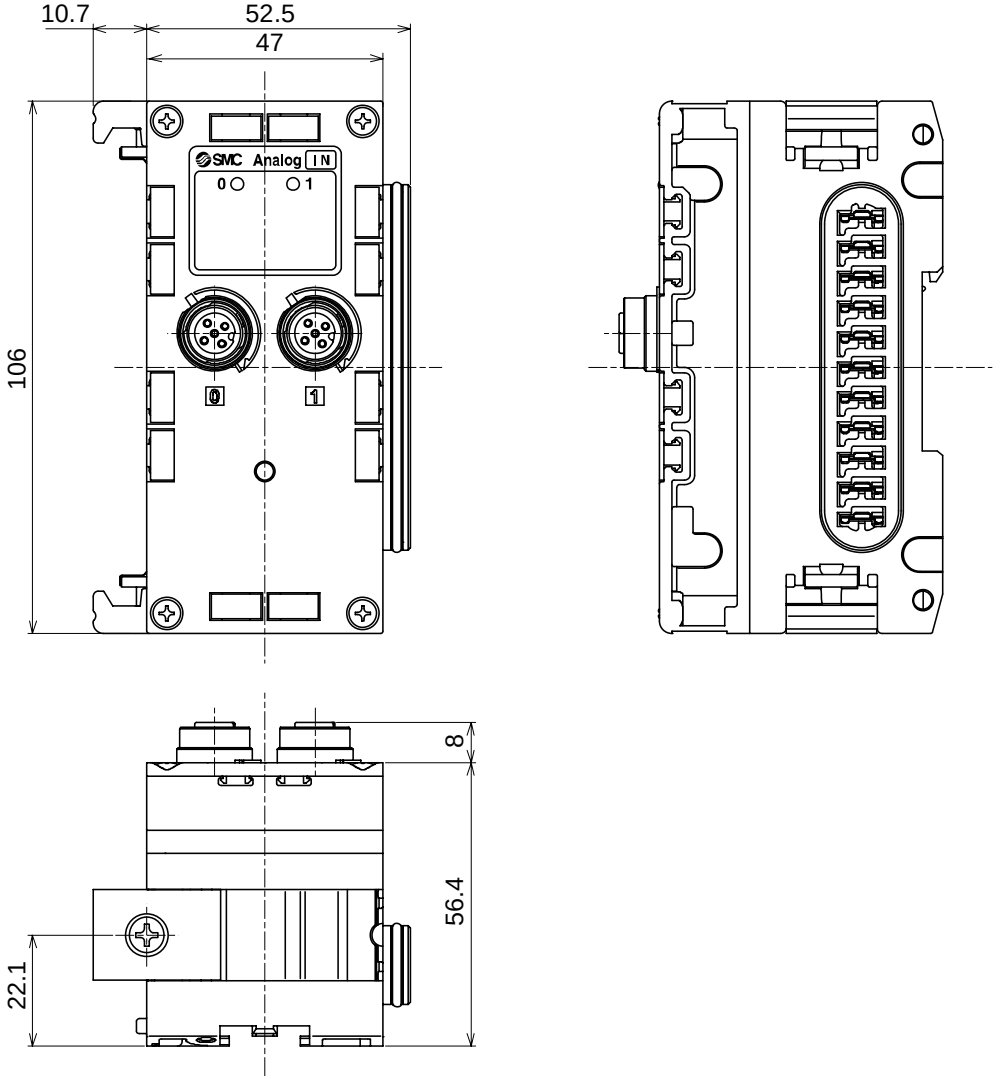

Endplate

How to order

EX600 – ED □ – □

End plate at D side

Connector

Symbol	Connector
2	M12(5Pin)
3	7/8inch Connector

Mounting method

Symbol	Mounting method
None	No DIN rail mounting plate
2	With DIN rail mounting plate

Name and Function of the Parts

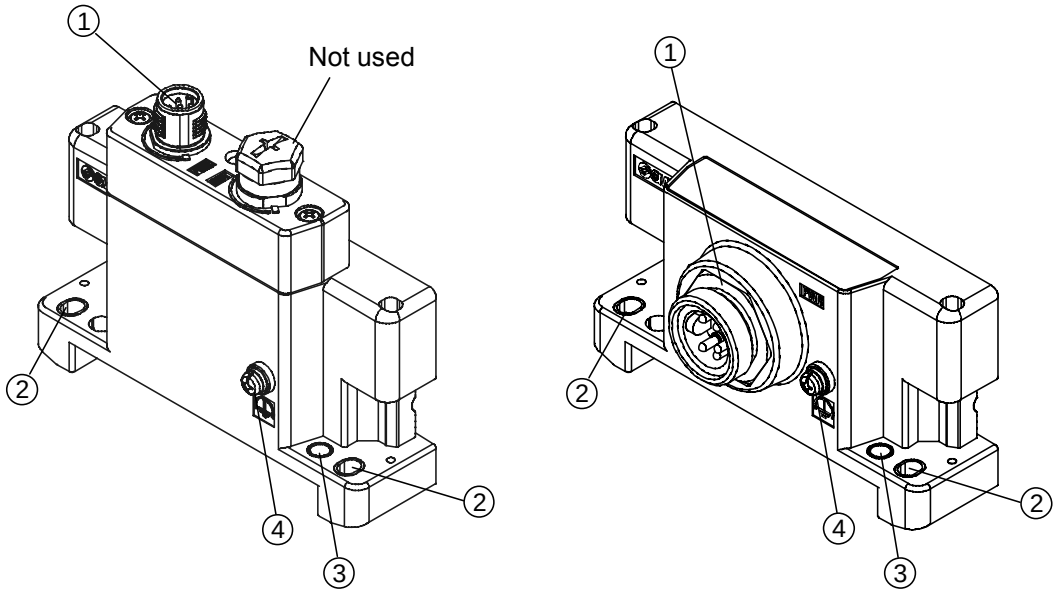

No.	Name	Description
1	Power connector	Connector for power input
2	Fixing hole for direct mounting	Holes used for direct mounting
3	DIN rail fixing hole	Holes used to fix DIN rail
4	FE terminal	FE terminal to earth.

Connector's pin assignment

(1) EX600-ED2

Pin No.	Signal name	Configuration
1	24V(for Output)	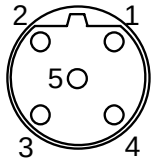
2	0V(for Output)	
3	24V(for control / input)	
4	0V(for control / input)	
5	FE	

(2) EX600-ED3

Pin No.	Signal name	Configuration
1	0V(for Output)	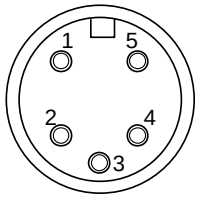
2	0V(for control / input)	
3	FE	
4	24V(for control / input)	
5	24V(for Output)	

Regarding the 2 types of power supply

This product has 2 power supplies, and it is divided as follows.

- Power supply for control and input: supplying power for control of each unit's and also for equipment connected to digital input units and analog input units.
- Power supply for output: supplying power for equipment connected to digital output units, and also power supply for solenoid valve manifold.

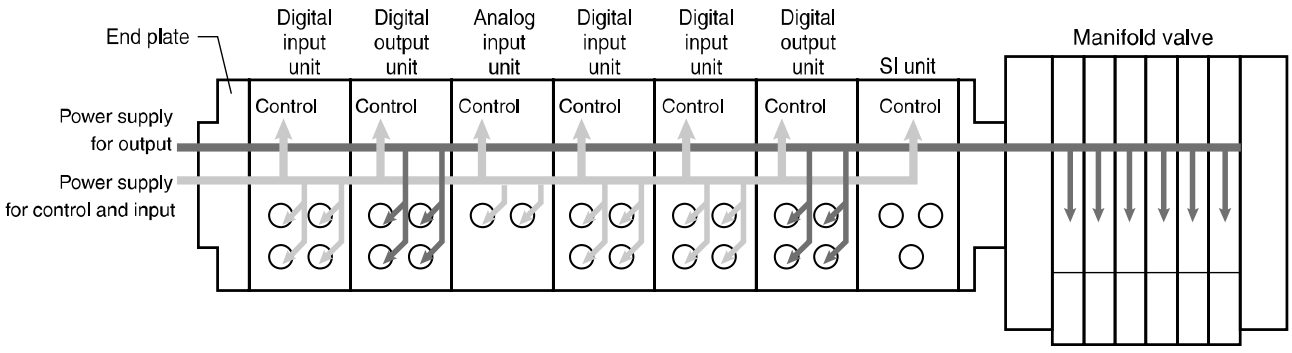

Specifications

• Specifications

Model		EX600-ED2	EX600-ED3
Input	Power connector	M12(5Pin) Plug	7/8inch(5Pin) Plug
	Control, input power supply	24VDC±10% Maximum 2A	24VDC±10% Maximum 8A
	Output power supply	24V +10%/-5% Maximum 2A	24V +10%/-5% Maximum 8A
Environmental	Enclosure	IP67(Manifold assembly)	
	Operating temp. range	-10~50°C	
	Operating humidity range	35~85%RH (no dew condensation)	
	Withstand voltage	AC500V for 1 min. between external terminals and FE	
	Insulation resistance	DC500V, 10MΩ or more between external terminals and FE	
	Vibration resistance	10~57Hz with constant amplitude of 0.75mm p-p 57-150Hz with constant acceleration of 49m/s^2 for 2 hours in each direction of X, Y and Z direction (during de-energizing)	
	Impact resistance	147m/s^2 3 times in each direction of X, Y and Z (during de-energizing)	
Standards		CE marking, UL recognition (CSA)	
Weight		170g	175g

• Outline Dimensions

(1) EX600-ED2

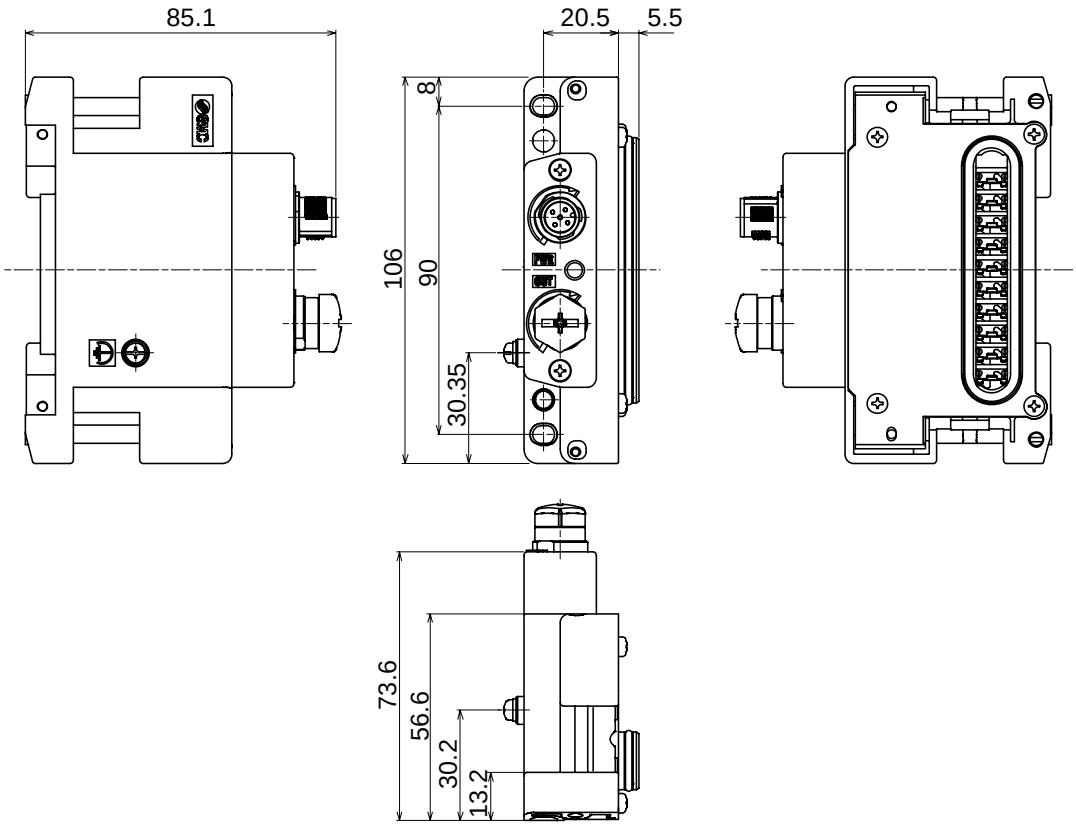

(2) EX600-ED3

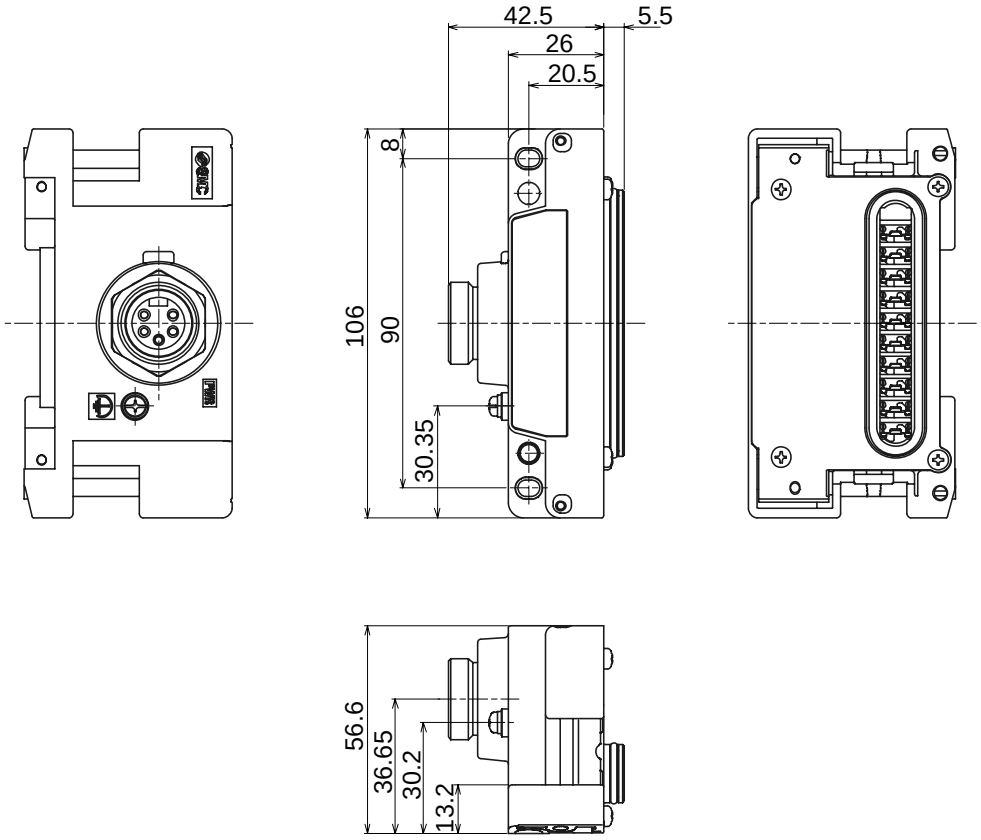

Troubleshooting

Please refer to the following troubleshooting flowchart if errors occur on the fieldbus system.
Error status is also reflected by the parameter settings of fieldbus system.
When trouble occurs, please give appropriate counter measure after referring to the troubleshooting and the parameter setting.
If cause of the problem cannot be confirmed, it is possible that the equipment may have failed. When failure of fieldbus system equipment occurs, it is also possible that the error caused by the system requirements. If that is the case, please consider the counter-measures accordingly.

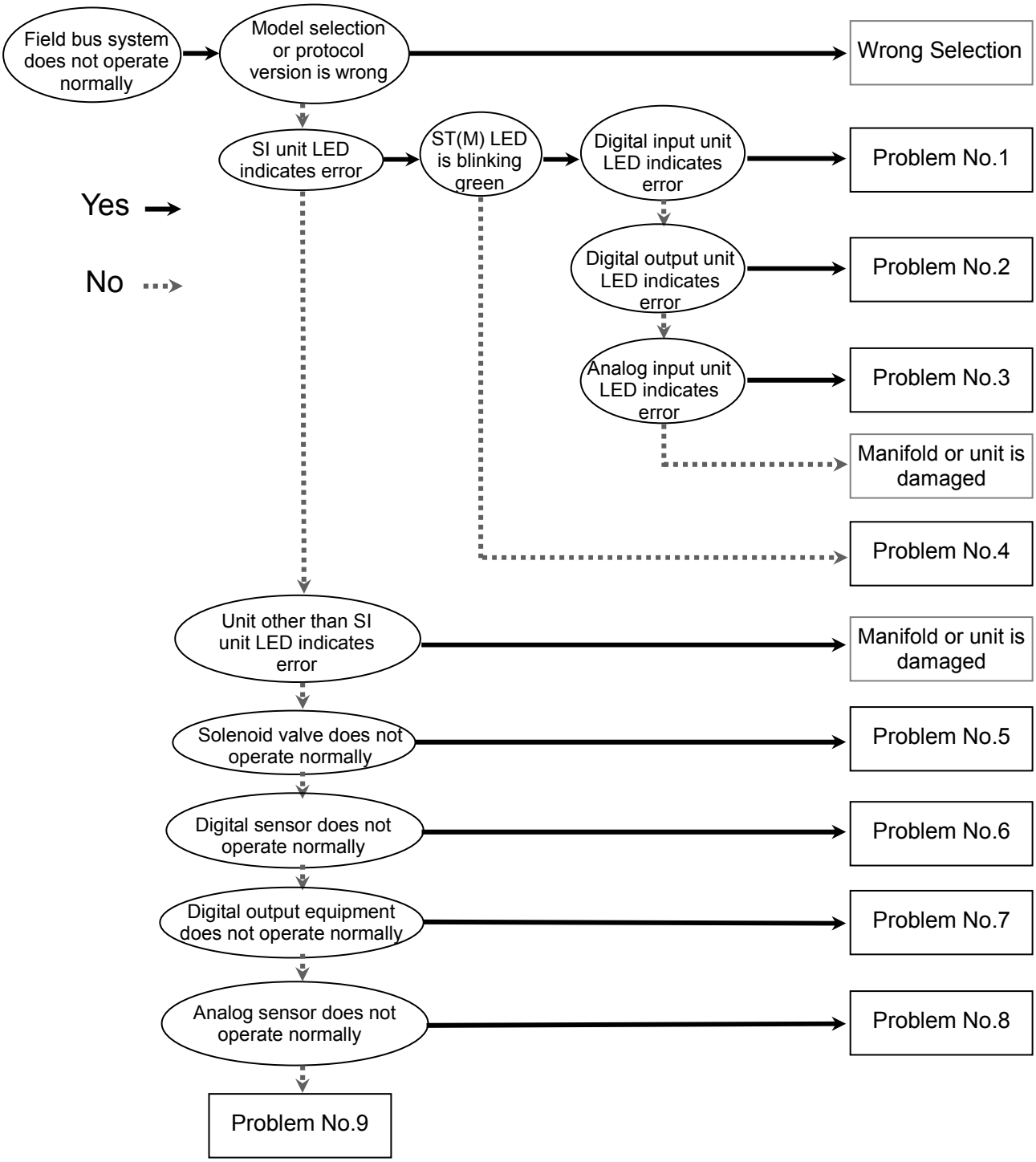

Trouble counter measure method

Problem No.	LED indication	Problem	Investigation Method	Counter-measure
1	Flashing Red (Diagnostic is active)	Cause can be either: 1) Sensor's ON/OFF counter exceeds setting value 2) Open circuit is detected on input sensor or cable. (for Open Circuit Detection type only)	Confirm cause 1) or 2) by PLC or H.T. Refer to details of system diagnosis data.	1) Reset the counter, change the setting or disable the diagnostic through parameter setting. 2) Confirm if there are loose connector and wire breakage. Moreover, please confirm if applicable sensor is used.
	Red (Diagnostic is active)	Diagnosis error (Sensor power supply is short circuited)	[No open circuit detection] Either of two adjacent sensor connections is short circuited (2x LED's will be ON). [With open circuit detection] The sensor connection is short circuited (LED is ON).	Check the wiring of the sensor connection which has the short circuit, or confirm whether the cable and the sensor are operating correctly.
	All LED flashing Green and Red	Unit has failed	-	Stop operation and contact SMC sales office
2	Flashing Red (Diagnostic is active)	Cause can be either: 1) Output device ON/OFF counter exceeds setting value 2) Open circuit is detected on output device or cable.	Confirm cause 1) or 2) by PLC or H.T. Refer to details of system diagnosis data.	1) Reset the counter, change the setting or disable the diagnostics through parameter setting. 2) Confirm if there are loose connections or broken wires.
	Red (Diagnostic is active)	Diagnosis error (output equipment is short circuited)	The output connection is short circuited (LED is ON).	Check the wiring, or confirm whether the output equipment is operating correctly
	All LED flashing Green and Red	Unit has failed	-	Stop operation and contact SMC sales office
3	Flashing Red (Diagnosis is active)	Diagnosis error (Upper/lower range limit exceeded)	1) Confirm if the sensor output exceeds the upper/lower measurement limits. 2) Confirm whether sensor output exceeds user setting upper/lower range.	1) Please adjust sensor output so that it is inside the measurement range, or adjust setting range or turn off over/under range detection. 2) Please adjust sensor output so that it is Inside the user setting value, or adjust user setting value or turn off user set value upper/lower limit detection.
	Red (Diagnostic is active)	Diagnosis error (Short circuit is detected on the sensor power supply).	Confirm if short circuit occurs at the sensor or cable	Confirm if sensor and cable are operating correctly.
	All LED Flashing green and red	Unit has failed	-	Please stop operation and please contact our sales office

Problem No.	LED indication	Problem	Investigation Method	Counter-measure
4	ST(M): Off	Power supply for control/input is OFF	Confirm if power supply for control/input is connected.	Re-connect power supply for control/input
	ST(M): Red	SI unit has failed	-	Stop operation and contact SMC sales office.
	ST(M): Flashing red (Diagnosis is active)	Diagnosis error (SI unit) 1) Valve short circuited 2) Broken wire at valve 3) Valve ON/OFF counter exceeds setting value.	Confirm through PLC or handheld terminal. For details, please refer to the System Diagnosis information.	For 1) and 2): valve is broken. Please replace valve and confirm operation. 3) Reset counter value, change setting value or disable the diagnostic through parameter setting.
	ST(M): Flashing green and red	1) Communication error between SI unit and I/O unit 2) Manifold configuration error	1) Confirm if the connection between units is not loose. 2) Confirm unit's order of connection	1) If the error does not recover, stop operation and contact SMC sales office 2) Connect the unit according to the saved configuration, re-register new manifold configuration or turn off manifold configuration memory function
	PWR: Red (Diagnostic is active)	The power supply voltage level for control and input is not normal	Confirm the power supply voltage level.	Supply DC24V±10% to the power supply for control and input.
	PWR(V): Red (Diagnostic is active)	The power supply voltage level for output is not normal	Confirm the used power supply voltage level.	Supply DC24V+10/-5% to the power supply for output.
	LRUN : Off LERR : Off	1) CC-Link communication error 2) PLC or SI unit is faulty	1) Confirm the following: - Station number and communication speed are set correctly - CC Link version and number of occupied terminal does not match - Terminating resistance is connected - Cable specifically for CC-Link is used - Communication speed and cable length is appropriate - There is no wire breakage on the cable - Communication line is protected from noise 2) Exchange PLC or SI unit with the working unit and confirm operation.	1) Perform setting and wiring according to CC-Link specifications 2) Exchange PLC or SI unit with the working unit and confirm operation.
	LRUN : Off LERR : Flashing Red	Station number, Baud rate or mode switch has been changed when power is ON	Confirm the switch settings.	Turn the power supply OFF. After switch setting is restored to correct settings, reintroduce the power supply.
	LRUN : Off LERR : Red	CC-Link communication error.	Confirm the following. 1) Station number is not set to "0" or above 65 2) Communication speed switch is set to within the specified range. 3) Communication line is protected from noise	For 1) and 2), turn off the power, return the switch setting to previous setting and turn the power back on. 3) Install the cable away from the noise source.

Problem No.	LED indication	Problem	Investigation Method	Counter-measure
5	Solenoid valve does not operate normally	Valve output setting for occupied points is less than the number of connected valves	Confirm the V_SEL switch setting in the SI unit is set to more than the actual connected valves.	Set the SI unit switch settings to an occupation points count greater than the number of valves used.
		CC-Link version is not compatible	Confirm if CC Link version and number of occupied terminal match	Turn off the power supply, set the correct operation mode and turn the power back ON.
		Program does not operate normally.	Confirm if ladder program at PLC Is correct	Same as left
		Power supply for output is defective	Check the status of the power supply for output	Supply DC24V +10/-5% to the power supply for output from the end plate unit
		Connection between SI Unit and solenoid valve manifold is defective	Confirm the connection between the SI Unit and solenoid valve manifold (Connector pin not bent, etc.)	Connect the SI Unit to the solenoid valve Manifold correctly
		SI Unit output type is not compatible with the solenoid valves	Confirm that the SI Unit and solenoid valves are compatible: EX600-SMJ1 (PNP Output) - Negative common type valve EX600-SMJ2 (NPN Output) - Positive common type valve	Replace the SI Unit or the solenoid valve so that the correct combination is used
		Defective SI Unit	Replace the SI Unit and confirm the operation	Replace the SI Unit.
		Defective solenoid valve	Replace the solenoid valve and confirm the operation	If the problem continues, refer to the solenoid valve operation manual.
6	Digital sensor does not operate normally	CC-Link version is not compatible	Confirm if CC Link version and number of occupied terminal match	Turn off the power supply, set the correct operation mode and turn the power back ON.
		Input type is not compatible	Confirm if input unit specification (PNP or NPN) and connected input equipment specification are compatible	Replace input unit or input equipment so that it become the correct combination
		Power supply for control and input is defective	Check the status of power supply for control and input	Supply DC24V ±10% to the power supply for control and input from the end plate
		Wiring or connection is defective	Confirm connection and wiring between input equipment and digital input unit.	Make corrections to the wiring between input equipment and digital input unit and continue operation
		Digital input unit is defective	Confirm the digital input unit	Replace the digital input unit
		Defective input equipment	Replace the input equipment and confirm the operation.	If the problem continues, refer to the input equipment operation manual.

Problem No.	LED indication	Problem	Investigation Method	Counter-measure
7	Digital output equipment does not operate normally	CC-Link version is not compatible	Confirm if CC Link version and number of occupied terminal match	Turn off the power supply, set the correct operation mode and turn the power back ON.
		Output type is not compatible	Confirm if output unit specification (PNP or NPN) and connected load specification are compatible.	Replace the output unit or load to give the correct combination
		Program does not operate normally	Confirm if the ladder program at the PLC Is correct	Correct the ladder program at the PLC
		Power supply for output is defective	Check the status of the power supply for output	Supply DC24V +10/-5% to the power supply for output from the end plate
		Wiring and connection is defective	Confirm connection between the output equipment and digital output unit.	Make corrections to the wiring between the output equipment and digital output unit and continue operation
		Digital output unit is defective	Confirm the digital output unit.	Replace the digital output unit.
		Output equipment is defective	Replace the output equipment and confirm the operation.	If the problem continues, refer to the output equipment operation manual.
8	Analog sensor does not operate normally	CC-Link version is not compatible	Confirm if CC Link version and number of occupied terminal match	Turn off the power supply, set the correct operation mode and turn the power back ON.
		Power supply for control and input is defective	Check the status of the power supply for control and input	Supply DC24V±10% to the power supply for control and input from the end plate
		Input signal range setting is not compatible	Confirm the connected sensor specification	Set the input signal range to suit the sensor specification.
		Analog data format is not compatible	Confirm the data format setting of the Analog input unit.	Set the data format of the Analog input unit to suit the application/program.
		Wiring and connection is defective	Confirm the connection between the input sensor and Analog input unit	Correct the wiring between the input sensor and Analog input unit
		Analog Input Unit is defective	Check the Analog input unit and confirm the operation	Replace the Analog input unit and confirm the operation
		Defective sensor	Replace the sensor and confirm the operation.	If the problem continues, refer to the sensor operation manual.
9	Other peripheral units do not operate normally	Defective peripheral units	Confirm that the program at PLC is correct.	For further details, refer to the relevant manuals of each peripheral unit.

Parameter Setting

The EX600 has parameters settings for the system, unit and also each unit's channel, which can be set through Handheld Terminal.

Parameter Definition

System Configuration

No	Parameter Name	Contents
1	Hold/Clear Setting Method	Select setting method of output state during communication fault state, either with the unit's setting switches or using a HHT. When using an HHT, each channel's output state can be set to Hold/Clear/Force ON. However, when using setting switches, the entire system's output state can be set

SI Unit Parameter

No	Parameter Name	Contents
1	Power Supply Voltage Monitor (Control/Input)	When power supply voltage for control/input goes above 26V or falls below 21V, a diagnostic error will be generated.
2	Power Supply Voltage Monitor (Output)	When power supply voltage for output goes above 26V or falls below 20V, a diagnostic error will be generated.
3	Short Circuit Detection	If short circuit or over current occurs when the valve output is ON, diagnostic error will be generated.
4	Restart after short circuit	When a short circuit at the valve has been removed, the short circuit detection error diagnostic can be set to automatically reset (error will automatically be cleared) or manual reset (error will not be cleared until power supply is reset)
5	Open Circuit Detection	If an open circuit is detected during Valve Output OFF, a diagnostic error will be generated. This setting can be made for each channel.
6	Output setting during communication fault	At the time of communication fault, each channel's Valve Output can be set to Hold, Clear or Force ON setting. This function will only be activated when the Hold/Clear setting method at the system configuration is set to Handheld.
7	Channel On/Off Counter	The number of times the valve is ON/OFF is recorded for each channel. There is a set value for each channel, and it is possible to generate a diagnostic error when the set value is reached. However, recording the number of ON/OFF is done in 30 second intervals (30 seconds per channel) from CH0 to the channels which have valve outputs. If the power supply for control and input is turned OFF, the last recorded value for each channel will become valid.

Digital Input Unit Parameter

No.	Parameter Name	Contents
1	Short circuit detection	If a short circuit or over current occurs at the sensor power supply, a diagnostic error will be generated.
2	Open Circuit Detection (Only available for Open Circuit Detection Unit)	If an open circuit is detected at the input sensor, a diagnostic error will be generated. There is a setting available for each channel. Please note the following: 1) When a 2-wire type sensor is used, during OFF state, a leak current of less than 0.5mA will not be detected. A sensor with a leak current of 0.5mA or more (in the OFF state) must be used. 2) When a 3-wire type sensor is used, if the sensor has a current consumption of less than 0.5mA, an open circuit may not be detected.
3	Inrush current filter	When an input equipment with high capacitance is connected, at the time power is supplied, over current will be detected. If the inrush current filter is active, during the first 100msec after power is supplied, over current will not be detected.
4	Input filtering time	A change of signal faster than the input filtering time will be disregarded.
5	Input extension time	An Input signal will be extended to the time set by this parameter. If the signal is longer than the setting, then this parameter's setting will be disregarded.
6	Channel On/Off Counter	The number of times the input is ON/OFF is recorded for each channel. There is a set value for each channel, and it is possible to generate a diagnostic error when the set value is reached. However, the counter value is recorded every one hour. If the power supply for control and input is turned OFF, data that has not been recorded will be cleared.

Digital output Unit Parameter

No	Parameter Name	Contents
1	Short Circuit Detection	If a short circuit or over-current occurs at the output's load, a diagnostic error will be generated.
2	Restart after Short Circuit	When a short circuit at the output has been removed, the short circuit detection error diagnostic can be set to automatically reset (error will automatically be cleared) or manual reset (error will not be cleared until power supply is reset)
3	Open Circuit Detection	If an open circuit is detected when the output is in the OFF state, a diagnostic error will be generated. This setting can be made for each channel.
4	Output Setting during communication fault	At the time of communication fault, each channel's output can be set to Hold, Clear or Force ON setting. This function will only be activated when the Hold/Clear setting method at the system configuration is set to Handheld.
5	Channel On/Off Counter	The number of times the output is ON/OFF is recorded for each channel. There is a set value for each channel, and it is possible to generate a diagnostic error when the set value is reached. However, the counter value is recorded every one hour. If the power supply for control and input is turned OFF, data that has not been recorded will be cleared.

Analog Input Unit Parameter

No	Parameter Name	Contents
1	Short Circuit Detection	If a short circuit or over-current occurs at the sensor power supply, a diagnostic error will be generated.
2	Analog input measurement range	Selection of Analog Input Range. The settable measurement ranges are: 0...10V, 1...5V, 0...5V, -10V...+10V, -5V...+5V, 0...20mA, 4...20mA, -20mA...+20mA.
3	Analog data format	Select data format, which is output to the PLC from the Analog Input unit. Available selections are: Offset Binary, Signed Binary, 2's Complements.
4	Analog averaging filter	Selection of analog averaging filter. The sampling cycle is about 2 seconds. Selectable values are: No filter, 2 Average (average between the last 2 input values), 4 Average, and 8 Average.
5	Range Upper Limit Error	If the input signal exceeds the upper limit value of the input range (0.5%), a diagnostic error will be generated.
6	Range Lower Limit Error	If the input signal exceeds the lower limit value of the input range (0.5%), a diagnostic error will be generated.
7	User settable value upper limit	If the input signal exceeds the upper limit value of the user settable range, a diagnostic error will be generated. This setting can be made for each channel.
8	User settable value lower limit	If the input signal exceeds the lower limit value of the user settable range, a diagnostic error will be generated. This setting can be made for each channel.

Parameter's Factory Default Setting

System Parameter

No	Parameter Name	Setting Value	Contents	Setting Level	Default Setting
1	Hold/Clear Setting Method	Switch	Hold/Clear Setting is made at SI Unit setting switch.	System	O
		Handheld	Hold/Clear Setting is made at Handheld Terminal		

SI Unit Parameter

No	Parameter Name	Setting Value	Contents	Setting Level	Default setting
1	Power supply voltage monitor for control and input	Enable	Enable monitoring of power supply voltage for control and input.	Unit	O
		Disable	Disable monitoring of power supply voltage for control and input.		
2	Power supply voltage monitor for output	Enable	Enable monitoring of power supply voltage for output	Unit	O
		Disable	Disable monitoring of power supply voltage for output		
3	Short Circuit Detection	Enable	Enable valve short circuit detection	Unit	O
		Disable	Disable valve short circuit detection		
4	Restart after short circuit	Auto	After short circuit has been removed, the error will be cleared automatically.	Unit	O
		Manual	After short circuit has been removed, the error will not be cleared until the power supply is reset.		
5	Open Circuit Detection	Enable	Enable valve open circuit detection	Channel	
		Disable	Disable valve open circuit detection		O
6	Output setting during communication fault.	Clear	During communication fault, clear valve output.	Channel	O
		Hold	During communication fault, hold valve output.		
		Force On	During communication fault, turn ON valve output.		
7	Valve's ON/OFF counter	Enable	If valve's ON/OFF counter exceeds the setting value, a diagnostic error will be generated.	Channel	
		Disable	Diagnostic error will not be generated		O
		Val	Set maximum counter value. Settable values are (1~65000) x 1000 times		65000

Digital Input Unit Parameter

No	Parameter Name	Setting Value	Contents	Setting Level	Default setting
1	Short circuit detection	Enable	Enable sensor's power supply short circuit detection	Unit	O
		Disable	Disable sensor's power supply short circuit detection		
2	Open circuit detection Note 1)	Enable	Enable input sensor open circuit detection	Channel	
		Disable	Disable input sensor open circuit detection		O
3	Inrush current Filter	Enable	Enable inrush current filter	Unit	O
		Disable	Disable inrush current filter		
4	Input Filtering time	0.1/1/10/20 msec	Set input signal filtering time.	Unit	1msec
5	Input extension time	1/15/100/200 msec	Set input signal's extension time	Unit	15 msec
6	Input Sensor's ON/OFF	Enable	If input sensor's ON/OFF counter exceeds setting value, diagnostic error will be generated.	Channel	
		Disable	Diagnostic error will not be generated		O
		Val	Set maximum counter value. Settable setting value are (1~65000) x 1000 times		65000

Note 1) Open Circuit Detection parameter is only available on Digital input unit with open circuit detection (P/N EX600-DXPC1, EX600-DXNC1).

Digital Output Unit Parameter

No	Parameter Name	Setting Value	Contents	Setting Level	Default setting
1	Short Circuit Detection	Enable	Enable output short circuit detection	Unit	O
		Disable	Disable output short circuit detection		
2	Restart after Short Circuit	Auto	After short circuit has been removed, the error will be cleared automatically	Unit	O
		Manual	After short circuit has been removed, the error will not be cleared until the power supply is reset		
3	Open Circuit Detection	Enable	Enable output open circuit detection	Channel	
		Disable	Disable output open circuit detection		O
4	Output setting during communication fault	Clear	During communication fault, clear output	Channel	O
		Hold	During communication fault hold output		
		Force On	During communication fault, turn ON output		
5	Output ON/OFF counter	Enable	If output ON/OFF counter exceeds the setting value, a diagnostic error will be generated.	Channel	
		Disable	Diagnostic error will not be generated		O
		Val	Set the maximum counter value. Settable value are (1~65000) x 1000 times		65000

Analog input Unit Parameter

No	Parameter Name	Setting Value	Contents	Setting Level	Default setting
1	Short Circuit Detection	Enable	Enable sensor power supply short circuit detection	Unit	O
		Disable	Disable sensor power supply short circuit detection		
2	Analog Input Range	0...10V, 1...5V、0...5V, -10V...+10V, -5V...+5V, 0...20mA, 4...20mA, -20mA...+20mA	Select analog input range	Channel	-10V...+10V
3	Analog Data Format	Offset Binary, Sign & Magnitude, 2s Complement	Select analog data format	Unit	Offset Binary
4	Analog Filter	None, 2 value average 4 value average 8 value average	Select analog data filter	Unit	2 value average
5	Over Range detection	Enable	If the analog input exceeds the maximum allowable input range (0.5%), a diagnostic error will be generated	Unit	Enable
		Disable	Above diagnostic error will not be generated.		
6	Under Range detection	Enable	If the analog input exceeds the minimum allowable input range(0.5%), a diagnostic error will be generated	Unit	Enable
		Disable	Above diagnostic error will not be generated.		
7	User Setting Value Upper Limit Error	Enable	If the analog input exceeds the upper user setting lower limit, diagnostic error will be generated	Channel	Disable
		Disable	Above diagnostic error will not be generated.		
		Val	Refer to Note1) for possible set value		10V Note2)
8	User Setting Value lower Limit Error	Enable	If the analog input falls below the lower user setting lower limit, diagnostic error will be generated	Channel	Disable
		Disable	Above diagnostic error will not be generated.		
		Val	Refer to Note1) for possible set value		0V Note2)

Note1) User setting value is settable according to the table below.

Analog input measurement range	User setting value set range	
	Upr_Lmt	Lwr_Lmt
-10 ... +10V	-10.5 ~ +10.45V	-10.45 ~ +10.5V
-5V ... +5V	-5.25 ~ +5.22V	-5.22 ~ +5.25V
-20 ... +20mA	-21 ~ +20.9mA	-20.9 ~ +21mA
0 ... +10V	0 ~ +10.45V	0.05 ~ +10.5V
0 ... +5V	0 ~ +5.22V	0.02 ~ +5.25V
+1 ... +5V	+0.75 ~ +5.22V	+0.77 ~ +5.25V
0 ... +20mA	0 ~ +20.9mA	0.1 ~ +21mA
+4 ... +20mA	+3 ~ +20.9mA	+3.1 ~ +21mA

Note 2) Factory default setting for Analog input range is -10...+10V
When changing the analog input measurement range, please make sure to confirm the set value and set the correct value accordingly.

I/O map

The occupied input/ output area of each EX600 unit is shown below.

Unit part no.	Abbreviation	Description	Occupied area			
			Bit area		Word area	
			Input (RX)	Output (RY)	Input (RWr)	Output (RWw)
EX600-SMJ# (32 points)	SI	SI Unit (32 points)	-	32bit	-	-
EX600-SMJ# (24 points)		SI Unit (24 points)	-	24bit	-	-
EX600-SMJ# (16 points)		SI Unit (16 points)	-	16bit	-	-
EX600-SMJ# (8 points)		SI Unit (8 points)	-	8bit	-	-
EX600-DX#B	DX	Digital input unit	8bit	-	-	-
EX600-DX#C		Digital input unit	8bit	-	-	-
EX600-DX#C1		Digital input unit (Wire breakage detection)	8bit	-	-	-
EX600-DX#D		Digital input unit	8bit	-	-	-
EX600-DY#B	DY	Digital output unit	-	8bit	-	-
EX600-AXA	AX	Analog input unit (2 channels)	-	-	4byte (2 bytes per channel)	-

Note) The EX600-SMJ# can change the occupied output bytes using switch settings.

The unit number is sequentially allotted from the End Plate side of EX600 assembly.
The input/ output map is shown with the following unit configuration as an example.

	Unit 0	Unit 1	Unit 2	Unit 3	Unit 4	Unit 5	
○	AXA	DY#B	DY#B	DX#B	DX#D	SMJ#	
○	Analog Input	Digital Output	Digital Output	Digital Input	Digital Input	SI unit (32 output)	Valve 32 points
	4byte input	8bit output	8bit output	8bit input	16bit input	32bit output	

Unit No.	Unit name	I/O map			
		Bit area		Word aera	
		RX	RY	RWr	RWw
0	Analog input unit (EX600-AXA)	-	-	2word	-
1	Digital output unit (EX600-DY#B)	-	8bit	-	-
2	Digital output unit (EX600-DY#B)	-	8bit	-	-
3	Digital input unit (EX600-DX#B)	8bit	-	-	-
4	Digital input unit (EX600-DX#D)	16bit	-	-	-
5	SI unit (EX600-SMJ#)	-	32bit	-	-
Total		24bit	48bit	2word	

Diagnostics

The following diagnostic data is allocated to the top of the I/O mapping input word area by switching No.5 and No.6 of the Setting2 switch. (Please refer to page 24 for switch settings.)

Diagnostic mode	Diagnostic data	Diagnostic size	Diagnostic area
0	No diagnostic data	0 word	-
1	System diagnostic	2 word	RWr0 - RWr1
2	System diagnostic + Unit diagnostic (for 10 units)	3 word	RWr0 - RWr2
3 Note 1)	System diagnostic + Unit diagnostic (for 64 units	6 word	RWr0 - RWr5

Note 1) Mode 3 setting is for future expansion of the function. It is not available in the current status.
Note 2) The channel diagnostics cannot be allocated to the input word area.
Use a hand-held terminal (H.T.) for monitoring.

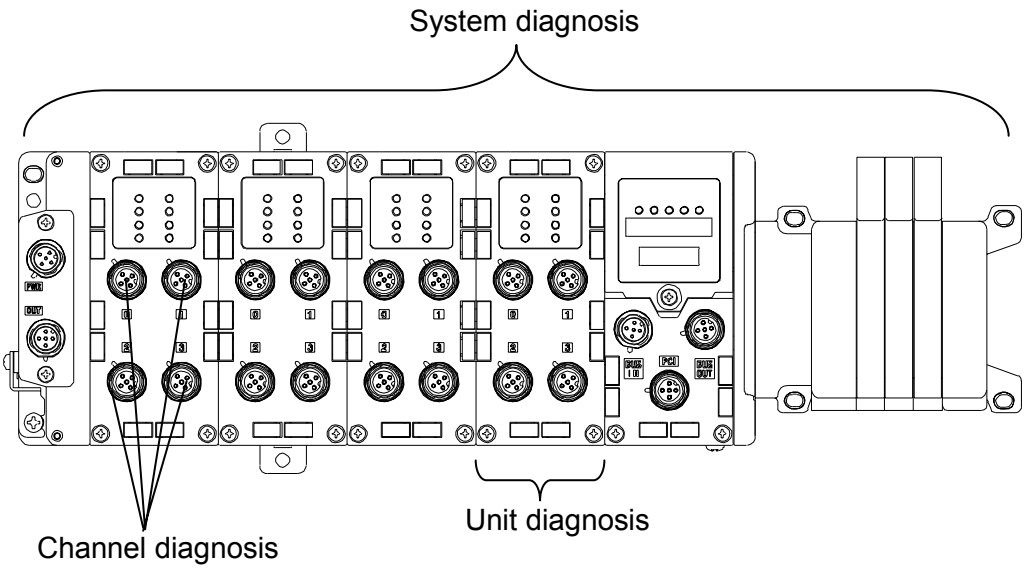

Details of diagnostics information

System diagnostics (RWr0-RWr1)

Register	Bit	Diagnostics content
RWr0	0	Power supply voltage for output is outside operating range
	1	Power supply voltage for control and sensor is outside operating range
	2	-
	3	Connection error on I/O Unit (during operation)
	4	Connection error on I/O Unit (at system start up)
	5	Manifold configuration error.
	6	System error
	7	Hardware error
	8	Analog input is below user setting lower limit value
	9	Analog input is above user setting upper limit value
	10	Analog input falls below measurement range
	11	Analog input exceeds measurement range
	12	Channel ON/OFF counter exceeds setting value
	13	Open circuit error detected
	14	Short circuit detected on valve output or digital output
	15	Short circuit detected on input sensor power supply
RWr1	0	Error detected on Digital Input unit
	1	Error detected on Digital Output unit
	2	Error detected on Analog Input unit
	3	-
	4	Error detected on SI unit
	5	-
	6	-
	7	-
	8	-
	9	-
	10	-
	11	-
	12	-
	13	-
	14	-
	15	-

Unit diagnostic (RWr2)

Register	Bit	Diagnostic conten
RWr2	0	Error detected on Unit 0
	1	Error detected on Unit 1
	2	Error detected on Unit 2
	3	Error detected on Unit 3
	4	Error detected on Unit 4
	5	Error detected on Unit 5
	6	Error detected on Unit 6
	7	Error detected on Unit 7
	8	Error detected on Unit 8
	9	Error detected on Unit 9
	10	-
	11	-
	12	-
	13	-
	14	-
	15	-

The Input and output map changes depending on operation mode and diagnostics mode settings. An example is shown below.

Operation Mode 1 (Ver.1.10　1 Station occupied)

No Diagnostics (mode 0 selected)

	bit area			word area	
	RX	RY		RWr	RWw
Station 1	I15..I0	O15..O0	0	AI0	Reserved
	System Area		1	AI1	Reserved
			2	AI2	Reserved
			3	AI3	Reserved

15..I0　: Digital input 16points
O15..O0 : Digital output 16points
AI3..AI0　: Analog input 4 channel

With Diagnostics (Mode 1 selected)

	bit area			word area	
	RX	RY		RWr	RWw
Station 1	I15..I0	O15..O0	0	System	Reserved
	System Area		1	Diagnosti	Reserved
			2	AI0	Reserved
			3	AI1	Reserved

Operation Mode 2 (Ver.1.10 2 Station occupied)

No Diagnostics (mode 0 selected)

	bit area			word area	
	RX	RY		RWr	RWw
Station 1	I15..I0	O15..O0	0	AI0	Reserved
	I31..I16	O31..O16	1	AI1	Reserved
			2	AI2	Reserved
			3	AI3	Reserved
Station 2	I47..I32	O47..O32	0	AI4	Reserved
	System Area		1	AI5	Reserved
			2	AI6	Reserved
			3	AI7	Reserved

With Diagnostics (Mode 2 selected)

	bit area			word area	
	RX	RY		RWr	RWw
Station 1	I15..I0	O15..O0	0	System	Reserved
	I31..I16	O31..O16	1	Diagnosti	Reserved
			2	c	Reserved
			3	AI0	Reserved
Station 2	I47..I32	O47..O32	0	AI1	Reserved
	System Area		1	AI2	Reserved
			2	AI3	Reserved
			3	AI4	Reserved

Operation Mode 5 (Ver.2.00　1 station occupied、Extended cyclic 4 times)

No Diagnostics (mode 0 selected)

	bit area			word area	
	RX	RY		RWr	RWw
Station 1 1st division	I15..I0	O15..O0	0	AI0	Reserved
			1	AI1	Reserved
			2	AI2	Reserved
			3	AI3	Reserved
Station 1 2nd division	I31..I16	O31..O16	0	AI4	Reserved
			1	AI5	Reserved
			2	AI6	Reserved
			3	AI7	Reserved
Station 1 3rd division	I47..I32	O47..O32	0	AI8	Reserved
			1	AI9	Reserved
			2	AI10	Reserved
			3	AI11	Reserved
Station 1 4th division	System Area		0	AI12	Reserved
			1	AI13	Reserved
			2	AI14	Reserved
			3	AI15	Reserved

With Diagnostics (Mode 1 selected)

	bit area			word area	
	RX	RY		RWr	RWw
Station 1 1st division	I15..I0	O15..O0	0	System	Reserved
			1	Diagnosti	Reserved
			2	AI0	Reserved
			3	AI1	Reserved
Station 1 2nd division	I31..I16	O31..O16	0	AI2	Reserved
			1	AI3	Reserved
			2	AI4	Reserved
			3	AI5	Reserved
Station 1 3rd division	I47..I32	O47..O32	0	AI6	Reserved
			1	AI7	Reserved
			2	AI8	Reserved
			3	AI9	Reserved
Station 1 4th division	System Area		0	AI10	Reserved
			1	AI11	Reserved
			2	AI12	Reserved
			3	AI13	Reserved

Operation Mode 7 (Ver.2.00　2 occupied stations、Extended Cyclic 8 times)

No Diagnostics (mode 0 selected)

	bit area			word area	
	RX	RY		RWr	RWw
Station 1 1st division	I15..I0	O15..O0	0	AI0	Reserved
			1	AI1	Reserved
			2	AI2	Reserved
			3	AI3	Reserved
Station 2 1st division	I31..I16	O31..O16	0	AI4	Reserved
	I47..I32	O47..O32	1	AI5	Reserved
			2	AI6	Reserved
			3	AI7	Reserved
Station 1 2nd division	I63..I48	O63..O48	0	AI8	Reserved
			1	AI9	Reserved
			2	AI10	Reserved
			3	AI11	Reserved
Station 2 2nd division	I79..I64	O79..O64	0	AI12	Reserved
	I95..I80	O95..O80	1	AI13	Reserved
			2	AI14	Reserved
			3	AI15	Reserved
.			.		
.			.		
.			.		
Station 1 8th division	I351..I336	O351..O336	0	AI56	Reserved
			1	AI57	Reserved
			2	AI58	Reserved
			3	AI59	Reserved
Station 2 8th division	I367..I352	O367..O352	0	AI60	Reserved
	System Area		1	AI61	Reserved
			2	AI62	Reserved
			3	AI63	Reserved

With Diagnostics (Mode 2 selected)

	bit area			word area	
	RX	RY		RWr	RWw
Station 1 1st division	I15..I0	O15..O0	0	System	Reserved
			1	Diagnosti	Reserved
			2	c	Reserved
			3	AI0	Reserved
Station 2 1st division	I31..I16	O31..O16	0	AI1	Reserved
	I47..I32	O47..O32	1	AI2	Reserved
			2	AI3	Reserved
			3	AI4	Reserved
Station 1 2nd division	I63..I48	O63..O48	0	AI5	Reserved
			1	AI6	Reserved
			2	AI7	Reserved
			3	AI8	Reserved
Station 2 2nd division	I79..I64	O79..O64	0	AI9	Reserved
	I95..I80	O95..O80	1	AI10	Reserved
			2	AI11	Reserved
			3	AI12	Reserved
.			.		
.			.		
.			.		
Station 1 8th division	I351..I336	O351..O336	0	AI53	Reserved
			1	AI54	Reserved
			2	AI55	Reserved
			3	AI56	Reserved
Station 2 8th division	I367..I352	O367..O352	0	AI57	Reserved
	System Area		1	AI58	Reserved
			2	AI59	Reserved
			3	AI60	Reserved

Accessories

Please refer to the catalogue for selecting the accessories.

(1)Valve Plate

Used for mounting solenoid valve manifold and SI unit.

EX600-ZMV1

(2)Metal fittings for Endplate

Metal fittings used with endplate when installed on DIN rail.

EX600-ZMA2

(3)Metal fittings for the intermediate reinforcement

Metal fittings used at the intermediate position when more than 6 units are assembled.

EX600-ZMB1	For direct mounting
EX600-ZMB2	For DIN rail mounting

(4)Seal cap (10 pcs included)

Please install a Seal cap in all unused input/output connectors, to maintain the protective construction of IP67.

EX9-AWES	For M8
EX9-AWTS	For M12

(5)Marker (1 sheet, 88pcs included)

A marker to show input/output equipment signal names and unit addresses, etc. can be inserted for each unit.

EX600-ZT1

(6)Y Junction connector

Connector used to branch off between sensor and input unit.

PCA-1557785	2×M12(3 pin)-M12(5 pin)

(7)Assembled type connector

PCA-1558797	Power supply cable 7/8”,Plug
PCA-1558807	Power supply cable 7/8”,Socket
PCA-1557617	CC-Link communication cable, Plug
PCA-1557620	CC-Link communication cable, Socket
PCA-1557730	M8(3 pin),Plug
PCA-1557743	M12(4 pin),Plug ,AWG26~AWG22,SPEEDCON compatible
PCA-1557756	M12(4 pin),Plug ,AWG22~AWG18,SPEEDCON compatible

(8)Power supply cable

PCA-1558810	Cable with 7/8” connector, Socket, Straight 2m
PCA-1558823	Cable with 7/8” connector, Socket, Straight 6m
PCA-1558836	Cable with 7/8” connector, Socket, Right angle 2m
PCA-1558849	Cable with 7/8” connector, Socket, Right angle 6m
PCA-1564927	Cable with M12 connector, B Code, Socket, Straight 2m, SPEEDCON compatible
PCA-1564930	Cable with M12 connector, B Code ,Socket ,Straight 6m, SPEEDCON compatible
PCA-1564943	Cable with M12 connector, B Code, Socket, Right angle 2m, SPEEDCON compatible
PCA-1564969	Cable with M12 connector, B Code, Socket, Right angle 6m, SPEEDCON compatible

(9)CC-Link communication cable

PCA-1567720	Cable with M12 connector cable, A Code, Socket, Straight 5m, SPEEDCON compatible
PCA-1567717	Cable with M12 connector, A Code, Plug, Straight 5m, SPEEDCON compatible

(10)Connector extension cable

PCA-1557769	M12(4pin),Straight 3m
PCA-1557772	M8(3pin),Straight 3m

Revision history

SMC Corporation

URL http://www.smcworld.com

4-14-1, Sotokanda, Chiyoda-ku, Tokyo 102-0021 Japan

Tel:+81 3 5207 8249 Fax:+81 3 5298 5362

Note: Specifications are subject to change without prior notice and any obligation on the part of the manufacturer.

The descriptions of products shown in this document may be used by the other companies as their trademarks.

© 2008 SMC Corporation All Rights Reserved

No.EX##-OML0009