ORIGINAL INSTRUCTIONS

Instruction Manual
Process Valve
VNB-X700 series (air operated type only)

The intended use of this valve is to control the fluid flow in a pneumatic circuit.

1 Safety Instructions

These safety instructions are intended to prevent hazardous situations and/or equipment damage. These instructions indicate the level of potential hazard with the labels of "Caution," "Warning" or "Danger." They are all important notes for safety and must be followed in addition to International Standards (ISO/IEC) *1), and other safety regulations.

*1) ISO 4414: Pneumatic fluid power - General rules relating to systems.
ISO 4413: Hydraulic fluid power - General rules relating to systems.
IEC 60204-1: Safety of machinery - Electrical equipment of machines. (Part 1: General requirements)
ISO 10218-1: Manipulating industrial robots -Safety. etc.

- Refer to product catalogue, Operation Manual and Handling Precautions for SMC Products for additional information.
- Keep this manual in a safe place for future reference.

⚠ Caution	Caution indicates a hazard with a low level of risk which, if not avoided, could result in minor or moderate injury.
⚠ Warning	Warning indicates a hazard with a medium level of risk which, if not avoided, could result in death or serious injury.
⚠ Danger	Danger indicates a hazard with a high level of risk which, if not avoided, will result in death or serious injury.

⚠ Warning

- **Always ensure compliance with relevant safety laws and standards.**
- All work must be carried out in a safe manner by a qualified person in compliance with applicable national regulations.

2 Specifications

2.1 Specifications

Fluid		Water, Oil, Air, Vacuum, etc (refer to table 2)
Ambient temperature		-5 to 60°C Note 1)
Fluid temperature		-5 to 99°C Note 1, 2) (Water, oil, etc. air operated only)
Proof pressure		1.5MPa
Applicable pressure range Note 3)	VNB#01##	Low vacuum to 0.5MPa
	VNB#02/4##	Low vacuum to 1MPa
Lubrication		Not required
Air quality		See 3.6 for details
Flow		Refer to table 3
Mounting orientation		Unrestricted
Response time		Contact SMC (Response time will depend on pilot valve used and pressure or piping conditions.)
Weight		Refer to table 4
Vibration resistance		30 m/s^2
Impact resistance		150 m/s^2
IP rating		Equivalent to IP67

Table 1

2 Specifications – Continued

Notes:
Note 1) No freezing.
Note 2) Auto switch temperature limit is 60°C.
Note 3) The pressure differential between Port 1 (A) and 2 (B) must not exceed the maximum operating pressure.

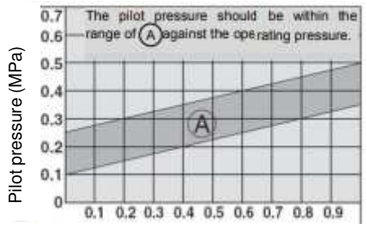

Figure 1

2.2 Auto switch specifications

Auto switch model	D-M9N(A)	D-M9P(A)	D-M9B(A)

Refer to Instruction Manual D-#S-TFK20GB, D-#S-TFU01 for additional specifications.

2.3 Applicable Fluids Check List

Wetted part body material	Copper alloy: Standard		Aluminium: L		Stainless steel: S	
Wetted part seal material / Fluid	A: NBR	B: FKM	A: NBR	B: FKM	A: NBR	B: FKM
Air (Standard, dry)	●	●	●	●	●	●
Low vacuum (up to -101 kPa)	●	●	●	●	●	●
Carbon dioxide (CO2, 0.7 MPa or less)	●	-	●	-	●	-
Nitrogen gas (N2)	●	●	●	●	●	●
Argon	●	●	●	●	●	●
Helium	-	●	-	●	-	●
Water (standard, up to 60°C)	●	-	-	-	●	-
Water (up to 99°C air operated type only)	-	●	-	-	-	●
Turbine oil	●	●	●	●	●	●
Spindle oil	-	●	-	●	-	●
Fuel oil Class 3 (C fuel oil)	-	●	-	●	-	●
Silicone oil	-	●	-	-	-	●
Naphtha	-	●	-	-	-	●
Boiler water	-	-	-	-	●	-

Table 2

2.4 Flow characteristics

Model	Measured by air				Measured by water	
	C [dm3/(bar·s)]	b	Cv	Effective area mm^2	Kv	Conversion Cv
VNB2#4#-10A	9.6	0.40	2.6	-	2.5	2.9
VNB2###-10A	17	0.32	4	-	3.9	4.5
VNB2#4#-15A	9.6	0.40	2.6	-	2.7	3.1
VNB2###-15A	19	0.24	4.8	-	5.0	5.8
VNB3#4#-20A	18	0.48	5.4	-	5.0	5.8
VNB3###-20A	35	0.13	7.4	-	9.6	11
VNB4#4#-25A	-	-	-	130	6.1	7.0
VNB4###-25A	-	-	-	220	10.4	12

Table 3

2 Specifications – Continued

2.5 Port size and Weight

Model	Port size Rc	Orifice Ø	Weight (kg)
VNB2#4#-10A	3/8	11	0.6
VNB2###-10A	3/8	15	0.6
VNB2#4#-15A	1/2	11	0.6
VNB2###-15A	1/2	15	0.6
VNB3#4#-20A	3/4	14	0.9
VNB3###-20A	3/4	20	0.9
VNB4#4#-25A	1	16	1.4
VNB4###-25A	1	25	1.4

Table 4

2.6 Symbols

VNB#01/4 Normally close (N.C) VNB#02 Normally open (N.O)

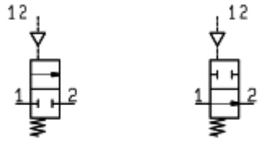

Figure 2

2.7 Working principle

2.7.1 Normally closed

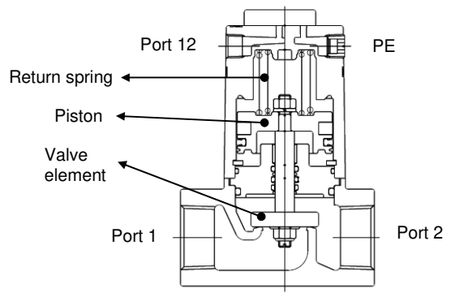

Figure 3

When air is exhausted from the pilot port 12, the valve element linked to the piston is closed by the return spring.

- When valve opens:

When pressurised air enters through the pilot port 12, the pilot air that has entered the piston moves upward to open the valve element.

- When valve closes:

When fluid is exhausted from the pilot port 12, the pilot air under the piston is exhausted, and the return spring closes the valve element.

2 Specifications – Continued

2.7.2 Normally open

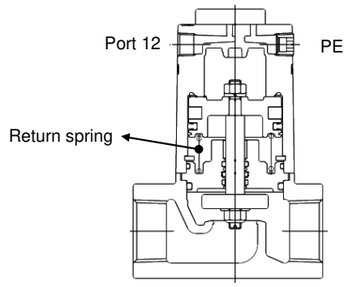

Figure 4

When air is exhausted from the pilot port PE, the valve is held open by the return spring. When pressurised air enters through the pilot port 12, the valve element closes.

3 Installation

3.1 Installation

⚠ Warning

- Do not install the product unless the safety instructions have been read and understood.
- If air leakage causes associated equipment to malfunction cease using valve and inspect for cause.
- Check fixings while pressure and power are applied. Initial function and leakage tests should be performed after installation.
- Allow sufficient space for maintenance and inspection.
- Do not paint any part of this product.
- When problems are caused by a water hammer, install water hammer relief equipment (accumulator, etc.), or use an SMC water hammer relief valve (VXR series). Please consult with SMC for details.

3.2 Environment

⚠ Warning

- Do not use in an environment where corrosive gases, chemicals, salt water or steam are present.
- Do not use in an explosive atmosphere.
- Do not expose to direct sunlight. Use a suitable protective cover.
- Do not install in a location subject to vibration or impact in excess of the product's specifications.
- Do not mount in a location exposed to radiant heat that would result in temperatures in excess of the product's specifications.
- Do not use in a high humidity environment where condensation may occur.
- Products with IP67 enclosures (based on IEC60529) are protected against dust and water; however, these products cannot be used in water.
- If using in an atmosphere where there is possible contact with water droplets, oil, weld spatter, etc., take suitable preventive measures.
- Do not use in an area where a magnetic field is generated.
  Auto switches can malfunction or magnets inside valve can become demagnetized.
- Do not use in an environment where there are cyclic temperature changes.
  Temperature cycles other than normal temperature changes can adversely affect the auto switch internally.
- Avoid accumulation of iron debris or close contact with magnetic substances. When a large amount of iron waste such as machining chips or spatter has accumulated, or a magnetic substance (something attracted by a magnet) is brought into close proximity with the valve, it may cause the auto switch to malfunction due to a weakening of the magnetic force inside the valve.

⚠ Caution

- Temperature of ambient environment
  Use the valve within the range of the ambient temperature specification of each valve. In addition, pay attention when using the valve in environments where the temperature changes drastically.

3 Installation – Continued

3.3 Piping

Caution

- Before connecting piping make sure to clean up chips, cutting oil, dust etc.
- When installing piping or fittings, ensure sealant material does not enter inside the port. When using seal tape, leave 1.5 to 2 threads exposed on the end of the pipe/fitting.
- Always tighten threads with the proper tightening torque.
  When using steel piping, tighten with the proper tightening torque shown below.
  Lower tightening torque will lead to fluid leakage.
- Tighten fittings to the specified tightening torque.

Thread	Tightening torque [N·m]
1/8 (Pilot port)	7 to 9
3/8	22 to 24
1/2	28 to 30
3/4	28 to 30
1	36 to 38

Table 5

- When high temperature fluids are used, use fittings and tubing with heat resistant features. (Self-align fittings, PTFE tubing, Copper tubing, etc.)
- Filter is installed on the pilot exhaust port

3.4 Lubrication

Caution

- SMC products have been lubricated for life at manufacture, and do not require lubrication in service.
- If a lubricant is used in the system, refer to catalogue for details.

3.5 Wiring

Warning

Refer to Instruction Manual of auto switch D-#S-TFK20GB, D-#S-TFU01 for additional details.

3.6 Air supply

Warning

- Use clean air
  If the compressed air supply includes chemicals, synthetic materials (including organic solvents), salinity, corrosive gas etc., it can lead to damage or malfunction.
- Although the product has a scraper to prevent foreign matter from entering the product, fluid containing fine foreign matter such as abrasive powder may cause sealing failure by the foreign matter adhering to the rod sliding part. Perform periodic maintenance or take countermeasures. Sealing failure of the rod sliding surface will allow reverse flow of the fluid into the pilot air piping, entering the pilot valve or circuit connected to the pilot air piping, causing adverse effects such as operation failure or leakage.

Caution

- Install an air filter upstream near the valve. Select an air filter with a filtration size of 5μm or smaller.
- When extremely dry air is used as the fluid, degradation of the lubrication properties inside the equipment may occur, resulting in reduced reliability (or reduced service life) of the equipment. Please contact SMC.
- Take measures to ensure air quality, such as by installing an aftercooler, air dryer, or water separator. Compressed air that contains a large amount of drainage can cause malfunction of pneumatic equipment such as valves. Therefore, take appropriate measures to ensure air quality, such as by providing an aftercooler, air dryer or water separator.
- If excessive carbon powder is generated, eliminate it by installing mist separators at the upstream side of valves. If excessive carbon powder is generated by the compressor, it may adhere to the inside of the valves and cause malfunction.

3 Installation – Continued

3.7 Mounting

Warning

When mounted in the vertical downward direction, foreign matter can remain in the plate assembly part. For this reason, avoid mounting in the vertical downward direction as much as possible.

3.7.1 Bracket

These valves have a special bracket different to the standard VNB.
Refer to drawings for dimensions.

3.7.2 Auto switch mounting

When tightening an auto switch mounting screw, use a watchmaker's screwdriver with a handle of approximately 5 to 6 mm in diameter.
Furthermore, use a tightening torque of approximately 0.05 to 0.15 N·m.

4 Settings

4.1 Auto switch mounting position

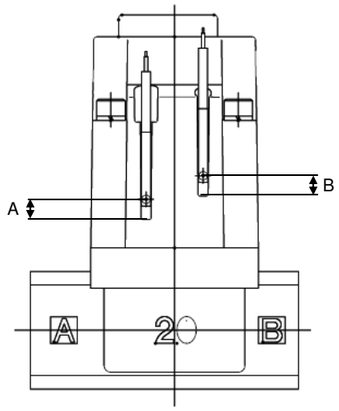

Figure 5

Model		Mounting Position (mm)
VNB2-X700	A	6
	B	5
VNB3-X700	A	6
	B	4
VNB4-X700	A	7
	B	3

Table 6

*The above dimensions including a mounted auto switch are for reference only. Confirm that the auto switch works appropriately.

5 How to Order

Refer to drawings for 'How to Order'.

6 Outline Dimensions (mm)

Refer to drawings for outline dimensions.

7 Maintenance

7.1 General Maintenance

Caution

- Not following proper maintenance procedures could cause the product to malfunction and lead to equipment damage.
- If handled improperly, compressed air can be dangerous.
- Maintenance of pneumatic systems should be performed only by qualified personnel.
- Before performing maintenance, turn off the power supply and be sure to cut off the supply pressure. Confirm that the air is released to atmosphere.
- After installation and maintenance, apply operating pressure and power to the equipment and perform appropriate functional and leakage tests to make sure the equipment is installed correctly.
- If any electrical connections are disturbed during maintenance, ensure they are reconnected correctly and safety checks are carried out as required to ensure continued compliance with applicable national regulations.
- Do not make any modification to the product.

7 Maintenance – Continued

- Do not disassemble the product, unless required by installation or maintenance instructions.
- Valves will reach high temperatures when used with high temperature fluids. Use caution, as there is a danger of being burned if valve is touched directly.
- Perform the following maintenance periodically in order to prevent possible danger due to unexpected auto switch malfunction.
  1) Securely tighten switch mounting screws. If screws become loose or the mounting position is dislocated, retighten them after readjusting the mounting position.
  2) Confirm that there is no damage to lead wires. To prevent faulty insulation, replace switches or repair lead wires, etc., if damage is discovered.
- Others
  1) For durability against water, elasticity, application at welding site, please consult SMC.
  2) If ON and OFF position (hysteresis) cause problems, please consult SMC.

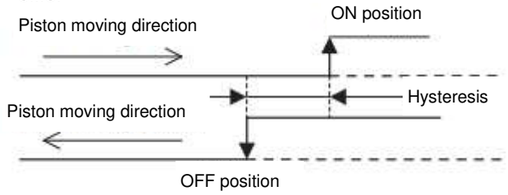

Figure 6

7.2 Filters and strainers

- Replace filter elements after one year of use, or earlier, if the pressure drop reaches 0.1 MPa.
- Clean strainers when the pressure drop reaches 0.1 MPa.
- Storage: In case of long term storage after use with heated water, thoroughly remove all moisture to prevent corrosion, and deterioration of rubber materials etc.
- Drain flushing: Remove drainage from air filters regularly. (Refer to the specifications)

8 Limitations of Use

8.1 Limited warranty and Disclaimer/Compliance Requirements

Refer to Handling Precautions for SMC Products.

Caution

8.2 Return of the valve to the safe position

When there is no supply/pilot air, the valve moves to the de-energised position by spring return.

8.3 Low temperature operation

Unless otherwise indicated in the specifications for each valve, operation is possible to -5 °C, but appropriate measures should be taken to avoid solidification or freezing of drainage and moisture, etc.

9 Contacts

Refer to Declaration of Conformity and www.smcworld.com for contacts.

SMC Corporation

URL : http// www.smcworld.com (Global) http// www.smceu.com (Europe)
'SMC Corporation, Akihabara UDX15F, 4-14-1, Sotokanda, Chiyoda-ku, Tokyo 101 0021
Specifications are subject to change without prior notice from the manufacturer.
© 2019 SMC Corporation All Rights Reserved.
Template DKP50047-F-085H