Environmentally Resistant 3-Finger Air Gripper

RoHS

ø32, ø63

Applicable for environments with water droplets and dust

Durability 10 times or more*1

*1 Compared with the standard model in environments with water splashing

A variety of scrapers and Lube-retainers for various applications (environments) are available.

Water droplets	Dust	
In environments with water splashing	**In dusty environments**	**In micro-powder (10 to 100 μm) environments**
With water-resistant scraper + Lube-retainer	**With heavy-duty scraper + Lube-retainer**	**With double Lube-retainer**
* Applicable for environments in which coolant scatters in machine tools and water scatters in food machines, cleaning machines, etc. A grease film is formed on the finger by the Lube-retainer in order to improve durability.	* Applicable for environments containing particles or foreign matter A grease film is formed on the finger by the Lube-retainer in order to improve durability.	* Prevents particles and foreign matter from entering the gripper The Lube-retainer ensures a consistent film of grease, improving gripper durability.

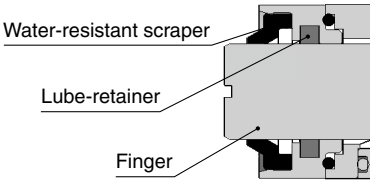

For use in environments with coolant splashing

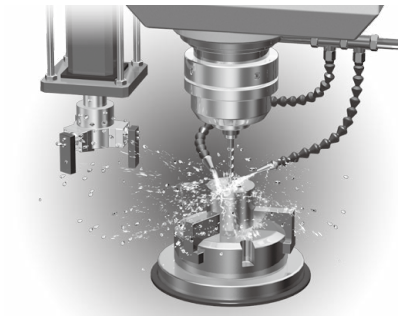

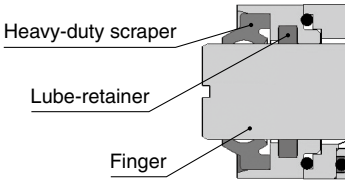

For machining equipment switching loaders

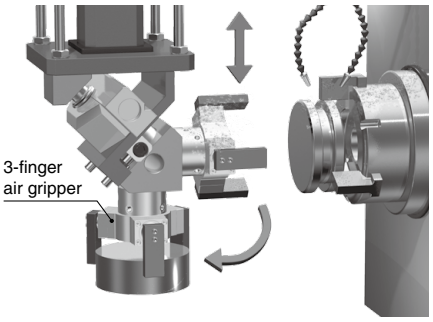

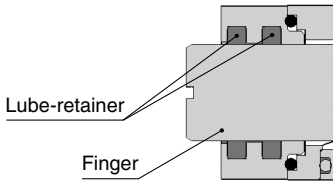

For the transfer of containers filled with powder

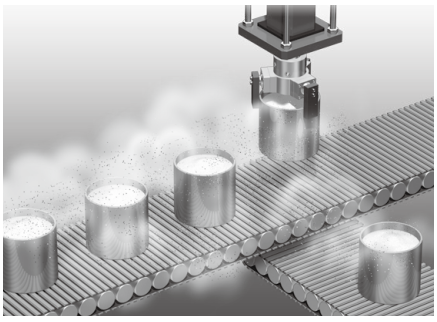

Improved attachment position reproducibility

Mounting example

Standardized positioning groove

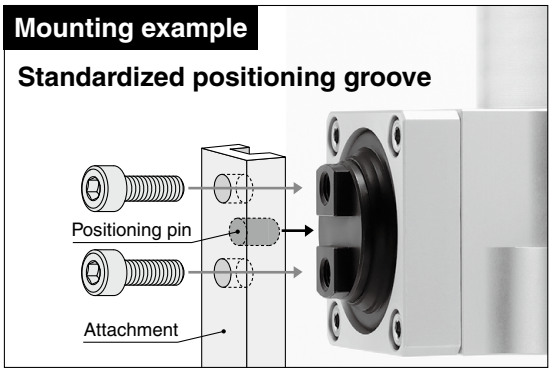

* The attachment, positioning pin, and bolts should be ordered separately by the customer.

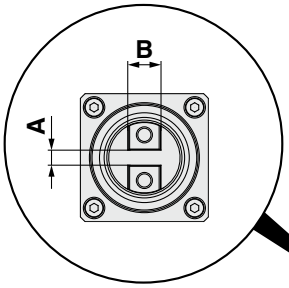

	A	B
ø32	2H9	8h9
ø63	6H9	12h9

* Refer to pages 4 and 5 for details on the depth.

Solid state auto switches are mountable.

Applicable auto switch: D-M9□

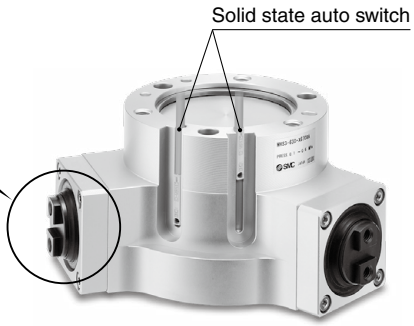

MHS3-X6708□

SMC

MHS3-X6708□
Model Selection

Model Selection Example

Selection Procedure

Step 1 Check the gripping force. → **Step 2** Check the gripping point.

Step 1 Check the gripping force.

Check the conditions. → Calculate the required gripping force. → Select the model from gripping force graph.

Example Workpiece mass: 0.4 kg

Gripping method: External gripping

Number of fingers: 3

Guidelines for the selection of the gripper with respect to workpiece mass

- Although differences will exist depending on the coefficient of friction between attachments and workpieces, select a model which will provide a gripping force as shown in the table below.
  - ∗ Refer to the model selection illustration regarding multiples of the workpiece weight.

Model	Multiples of gripping force by workpiece weight
MHS3	7 to 13 times or more

- Further allowance should be provided when great acceleration or impact is expected during workpiece transfer.

Example) For setting the gripping force to be at least 13 times greater than the workpiece weight:
Required gripping force = 0.4 kg x 13 x 9.8 m/s² ≈ 50.9 N or more

Gripping point: 20 mm

Operating pressure: 0.4 MPa

MHS3-32D-X6708□
External Gripping Force

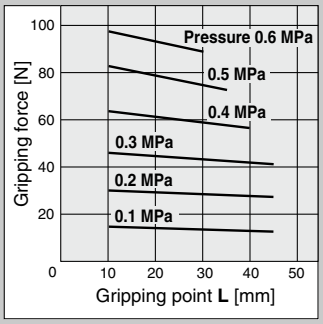

- When the **MHS3-32D** is selected A gripping force of 62 N is obtained from the intersection point of gripping point distance L = 20 mm and a pressure of 0.4 MPa.
- The gripping force is 15.5 times greater than the workpiece weight, and therefore satisfies a gripping force setting value of 13 times or more.

∗ For **Step 2**, refer to the gripping point for the effective gripping force on page 2.

Model Selection Illustration

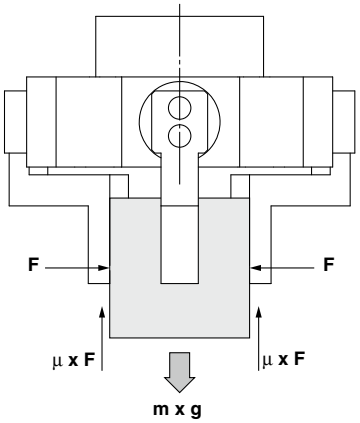

When gripping a workpiece as in the figure to the left, and with the following definitions,

3: Number of fingers
F: Gripping force [N]
μ: Coefficient of friction between the attachments and the workpiece
m: Workpiece mass [kg]
g: Gravitational acceleration (9.8 m/s²)
mg: Workpiece weight [N]

the conditions under which the workpiece will not drop are

$$3 \times \mu F > mg$$

and therefore,

$$F > \frac{mg}{3 \times \mu}$$

With "**a**" as the safety margin, **F** is determined as follows:

$$F = \frac{a \times mg}{3 \times \mu}$$

Multiples of Gripping Force by Workpiece Mass

Number of fingers: When n = 3

· SMC performs calculations allowing for impacts which occur during normal transfer, etc., using a safety margin of a = 4.

When μ = 0.2	When μ = 0.1
$F = \frac{mg}{3 \times 0.2} \times 4$	$F = \frac{mg}{3 \times 0.1} \times 4$
= 10 x mg	= 20 x mg
↑ 10 x Workpiece weight	↑ 20 x Workpiece weight

∗ · Even in cases where the coefficient of friction is greater than μ = 0.2, for reasons of safety, select a gripping force which is at least 7 to 13 times greater than the workpiece weight, as recommended by SMC.
· If high acceleration, or impact forces are encountered during motion, a further margin should be considered.

Gripping Point

- The workpiece gripping point distance should be within the gripping force ranges given for each pressure in the effective gripping force graphs below.
- If operated with the workpiece gripping point beyond the indicated ranges, an excessive offset load will be applied to the sliding section of the fingers, which can have an adverse effect on the service life of the product.

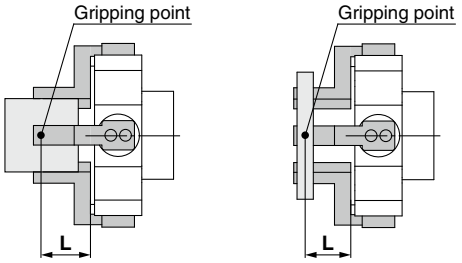

External gripping state Internal gripping state

L: Gripping point distance

Effective Gripping Force

- Indication of effective gripping force
  The effective gripping force shown in the graphs to the right is expressed as **F**, which is the thrust of one finger when all 3 of the fingers and attachments are in full contact with the workpiece as shown in the figure below.

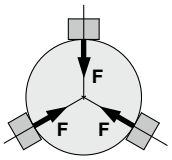

External grip

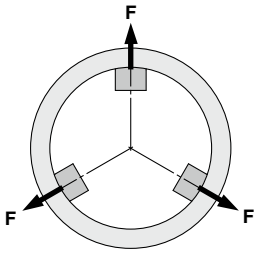

Internal grip

External Gripping Force

MHS3-32D-X6708□

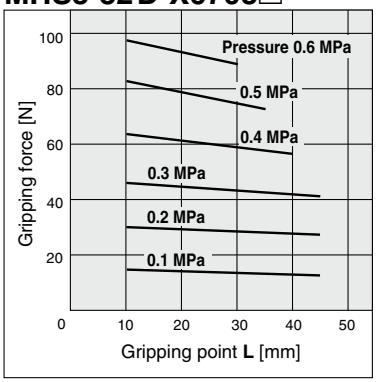

MHS3-63D-X6708□

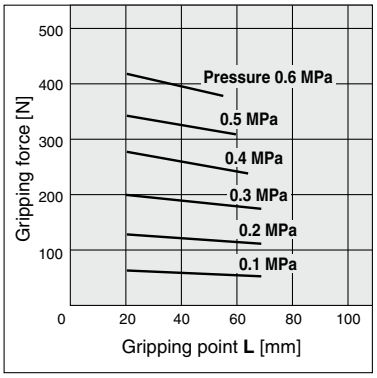

Internal Gripping Force

MHS3-32D-X6708□

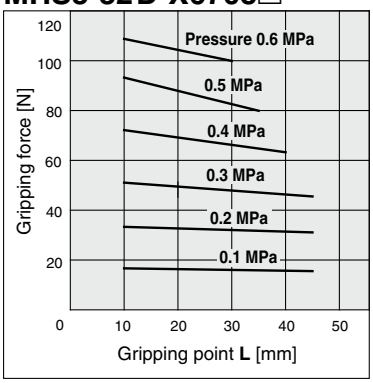

MHS3-63D-X6708□

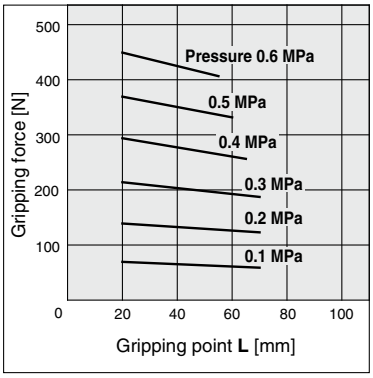

Environmentally Resistant 3-Finger Air Gripper

MHS3-X6708□

ø32, ø63

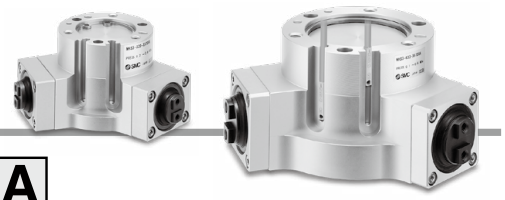

How to Order

MHS3 – 32 D – M9BA □ – X6708 A

Bore size

32	32 mm
63	63 mm

Auto switch

Nil	Without auto switch (Built-in magnet)

∗ For applicable auto switches, refer to the table below.

Number of auto switches

Nil	2
S	1

Environmentally Resistant 3-Finger Air Gripper

Specifications

A: With heavy-duty scraper + Lube-retainer

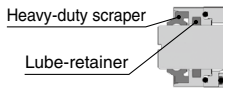

B: With water-resistant scraper + Lube-retainer

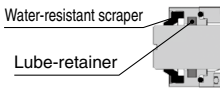

C: With double Lube-retainer

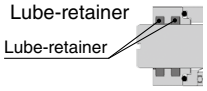

Applicable Auto Switches / Refer to the **Web Catalog** for further information on auto switches.

Type	Special function	Electrical entry	Indicator light	Wiring (Output)	Load voltage DC	Load voltage AC	Auto switch model Perpendicular	Auto switch model In-line	Lead wire length [m]∗2 0.5 (Nil)	1 (M)	3 (L)	5 (Z)	Pre-wired connector	Applicable load	
Solid state auto switch	——	Grommet	Yes	3-wire (NPN)	24 V	5 V, 12 V	—	**M9NV**	**M9N**	●	●	●	○	○	IC circuit	Relay, PLC
				3-wire (PNP)				**M9PV**	**M9P**	●	●	●	○	○		
				2-wire		12 V		**M9BV**	**M9B**	●	●	●	○	○	—	
	Diagnostic indication (2-color indicator)			3-wire (NPN)		5 V, 12 V		**M9NWV**	**M9NW**	●	●	●	○	○	IC circuit	
				3-wire (PNP)				**M9PWV**	**M9PW**	●	●	●	○	○		
				2-wire		12 V		**M9BWV**	**M9BW**	●	●	●	○	○	—	
	Water resistant (2-color indicator)			3-wire (NPN)		5 V, 12 V		**M9NAV**∗1	**M9NA**∗1	○	○	●	○	○	IC circuit	
				3-wire (PNP)				**M9PAV**∗1	**M9PA**∗1	○	○	●	○	○		
				2-wire		12 V		**M9BAV**∗1	**M9BA**∗1	○	○	●	○	○	—	

∗1 Water-resistant type auto switches can be mounted on the above models, but SMC cannot guarantee water resistance.

∗2 Lead wire length symbols: 0.5 m…… Nil (Example) M9NW; 1 m…… M (Example) M9NWM; 3 m…… L (Example) M9NWL; 5 m…… Z (Example) M9NWZ

∗ Solid state auto switches marked with "○" are produced upon receipt of order.

∗ When using the 2-color indicator type, please set it so that the indicator lights up red to ensure air gripper detection at the proper position.

Specifications

Model		MHS3-32D-X6708□	MHS3-63D-X6708□
Bore size		ø32	ø63
Fluid		Air	
Action		Double acting	
Operating pressure		0.2 to 0.6 MPa	
Ambient and fluid temperatures		–10 to 60°C	
Repeatability		±0.01 mm	
Gripping force (0.5 MPa, L = 30 mm)	External gripping force	74 N	335 N
	Internal gripping force	82 N	359 N
Finger stroke∗1		4 mm	8 mm
Seal material		NBR	
Max. operating frequency		60 c.p.m.	
Lubricant		Non-lube	
Weight		600 g	2,400 g

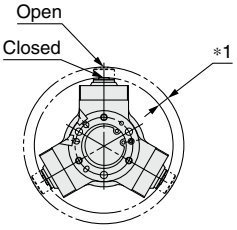

Replacement Parts

Cover assembly part number

MHS3 – A □ – X6708 □

Bore size

32	32 mm
63	63 mm

Specifications

A	With heavy-duty scraper + Lube-retainer
B	With water-resistant scraper + Lube-retainer
C	With double Lube-retainer

No.	Description	X6708 A	X6708 B	X6708 C
1	**Finger cover**	●	●	●
2	**Heavy-duty scraper**	●	—	—
3	**Water-resistant scraper**	—	●	—
4	**Lube-retainer**	●	●	●
5	**O-ring**	●	●	●
6	**Hexagon socket head cap screw**∗1	●	●	●

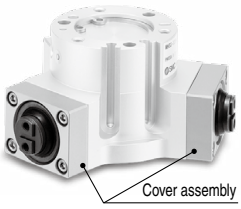

∗1 Hexagon socket head cap screws for mounting (4 pcs.) are shipped together with the product.

∗ For the cover assembly, order 3 pieces per unit.

X6708A (With heavy-duty scraper + Lube-retainer)
X6708B (With water-resistant scraper + Lube-retainer)

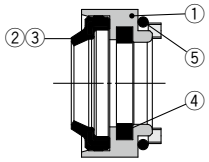

X6708C (With double Lube-retainer)

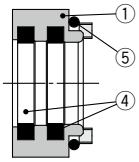

Dimensions

MHS3-32D-X6708□

(The dimensions of the model with a heavy-duty scraper + Lube-retainer, the model with a water-resistant scraper + Lube-retainer, and the model with a double Lube-retainer are the same.)

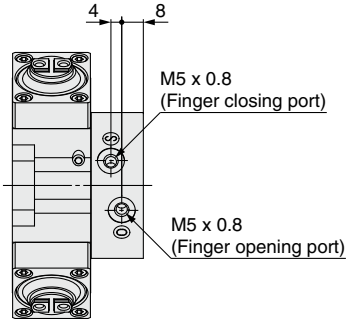

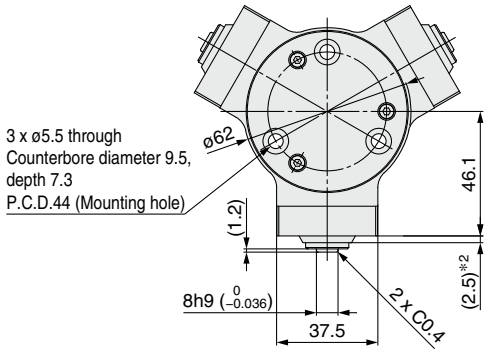

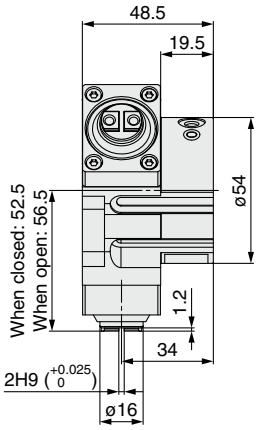

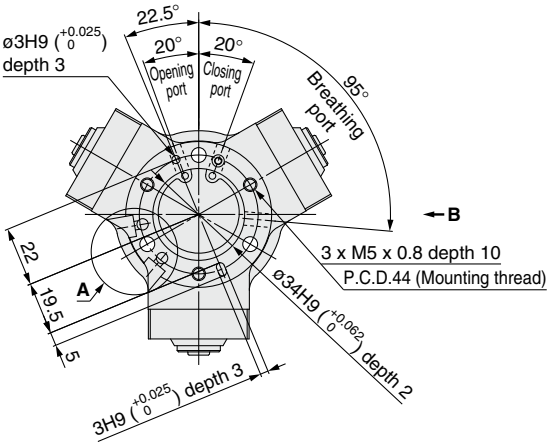

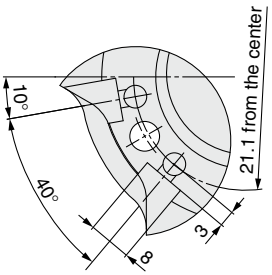

A
Auto switch mounting groove dimensions
(2 locations, same shape)

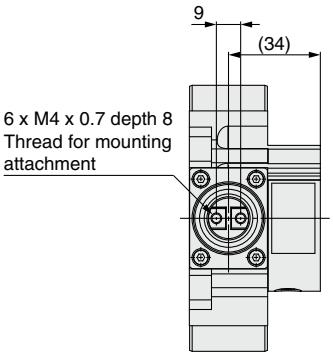

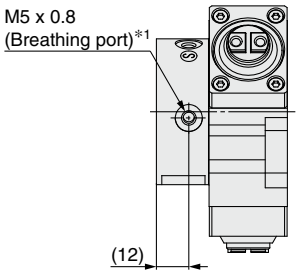

View B

*1 Connect piping to the breathing port so that the dust, water, etc., in the surrounding atmosphere does not get into the product, and open the port to a safe place.
*2 Only applies to the model with a heavy-duty scraper or water-resistant scraper

Dimensions

MHS3-63D-X6708□

(The dimensions of the model with a heavy-duty scraper + Lube-retainer, the model with a water-resistant scraper + Lube-retainer, and the model with a double Lube-retainer are the same.)

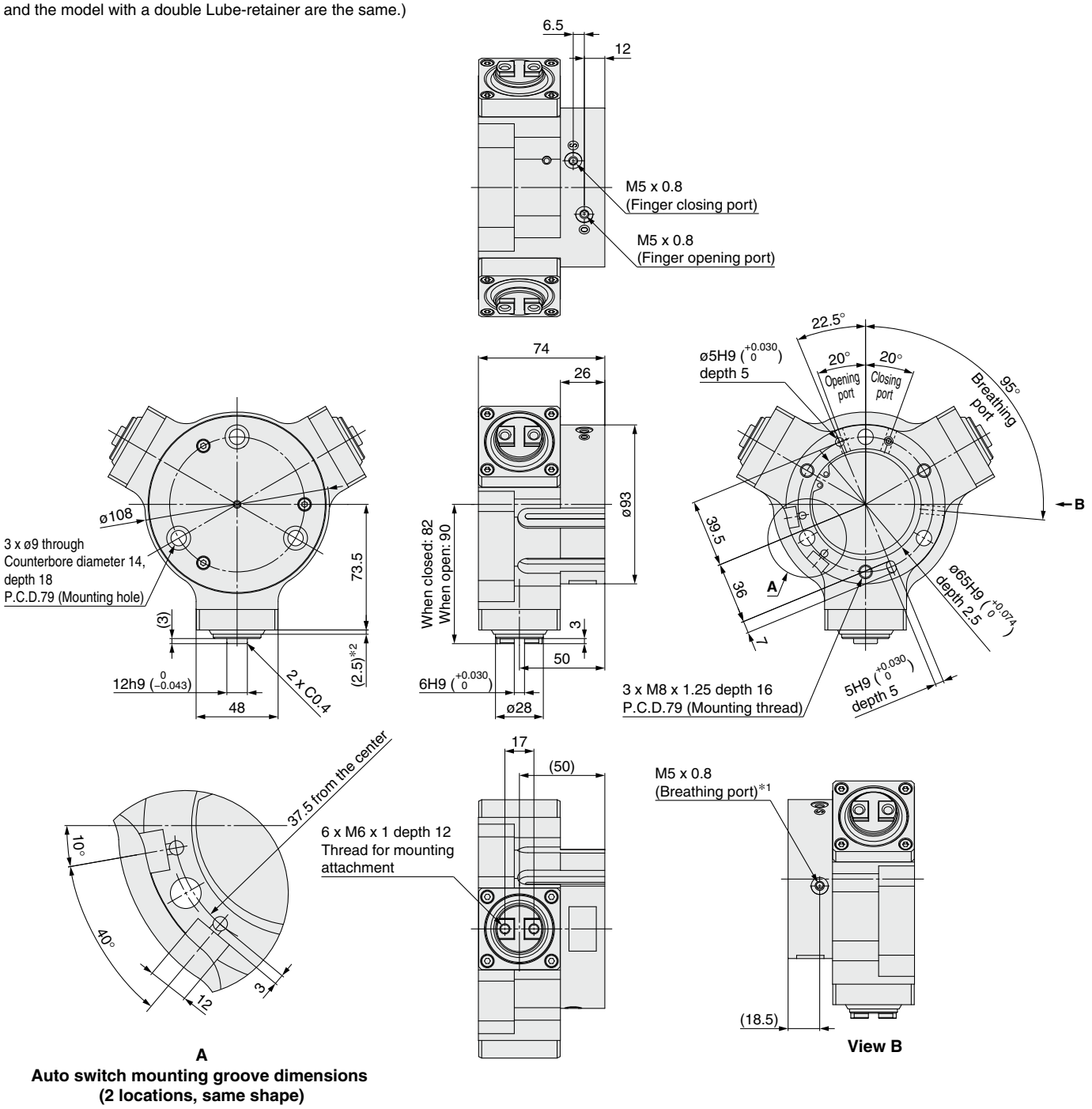

A
Auto switch mounting groove dimensions
(2 locations, same shape)

*1 Connect piping to the breathing port so that the dust, water, etc., in the surrounding atmosphere does not get into the product, and open the port to a safe place.
*2 Only applies to the model with a heavy-duty scraper or water-resistant scraper

MHS3-X6708□
Related Products

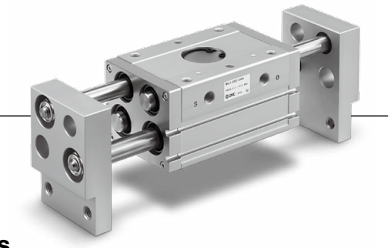

Wide Type Parallel Style Air Gripper/MHL2-X85/-X86
ø10, ø16, ø20, ø25, ø32, ø40

- **In micro-powder (10 to 100 μm) environments**
  With double Lube-retainer (-X85)
  - ∗ Prevents particles and foreign matter from entering the gripper
    The Lube-retainer ensures a consistent film of grease, improving gripper durability.

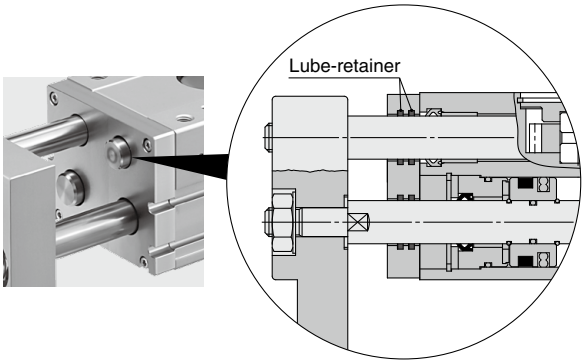

- **In dusty environments**
  With heavy-duty scraper + Lube-retainer (-X86□)
  - ∗ Applicable for environments containing particles or foreign matter
    A grease film is formed on the rod by the Lube-retainer in order to improve durability.
  - ∗ Seal material can be NBR or fluororubber.

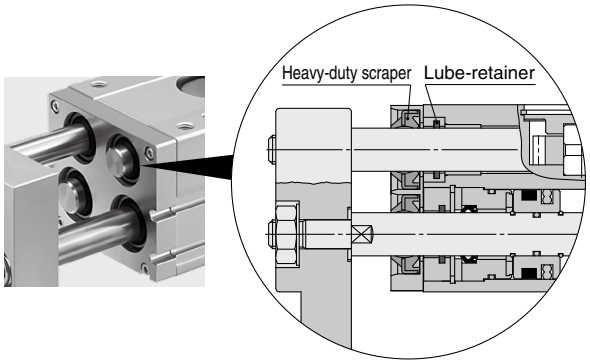

Coolant-resistant Air Gripper/MHZJ2-32D-X6544
ø32

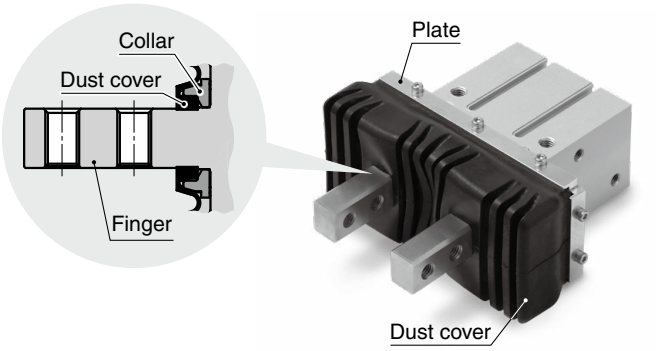

- Increased resistance to splashing coolant
- Finger portion with collar protected by dust cover prevents contamination.
- Dust cover and plate connection prevent contamination.

⚠ **Safety Instructions**	Be sure to read the “Handling Precautions for SMC Products” (M-E03-3) and “Operation Manual” before use.