Speed Controller with Indicator

Numerical indication of knob rotation for flow rate

RoHS

reduces flow setting time and setting errors!

Elbow | Universal | Brass (Electroless nickel plated) | Stainless steel

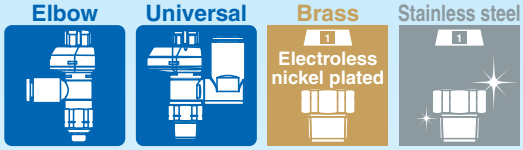

Indicator window

Body size 1		Body size 2 or larger	
Indicator window	Number of needle rotations	Indicator window	Number of needle rotations
1	1	1	1
2	2	2	2
⋮	⋮	⋮	⋮
8	8	10	10

4 indicator window directions available

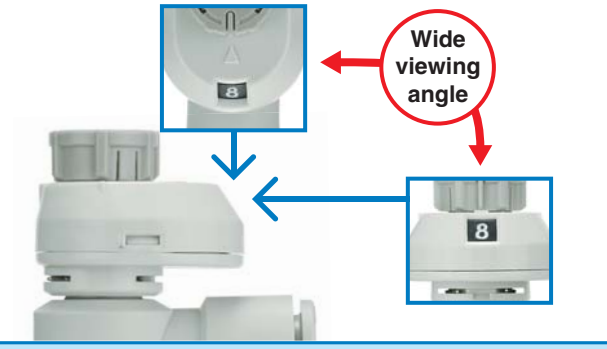

New series added!

Universal type — **Indicator window direction: 90°/270°**

AS-FS Series

SMC

CAT.EUS20-229D-UK

4 indicator window directions offer improved visibility.

Inspection and maintenance labour is reduced by selecting the indicator window direction suitable for the operating conditions. In addition, the flexibility of equipment design is improved.

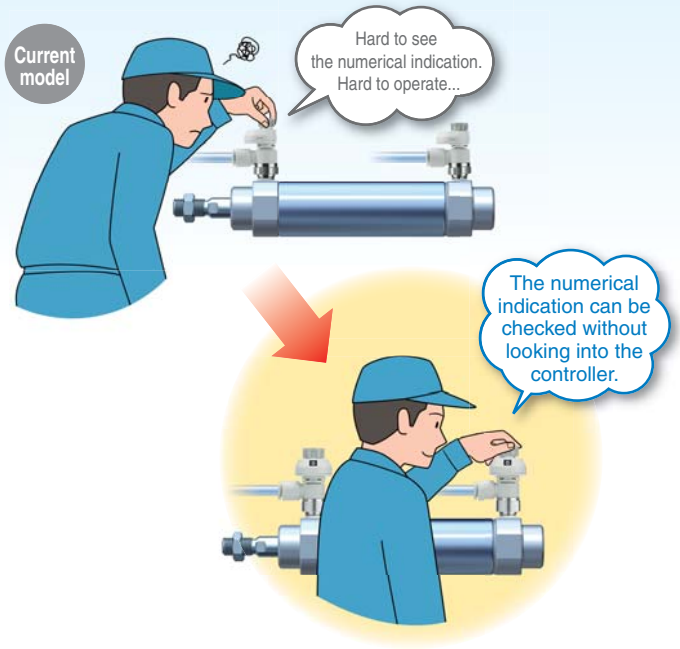

Larger push-lock type knob

Easy to lock

Easy to operate with the larger knob and marking every 90° mark

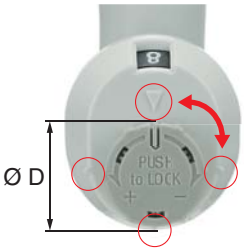

Body size	Ø D [mm]
1	9.4
2	12 (Port size 1/8) 13 (Port size 1/4)
3	16.6
4	18.8

Push-lock type

Improved reproducibility of flow rate

Fully closed

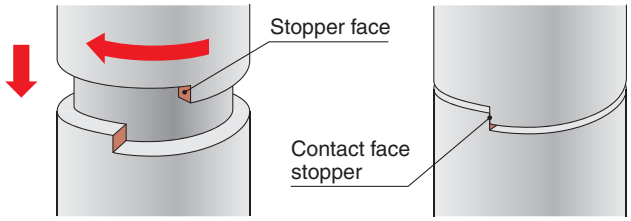

Stable knob position when fully closed (no flow rate) onto the contact face stopper (rotating stopper). Small variations in flow rate depending on the number of knob rotations

Easier to insert and remove the tube

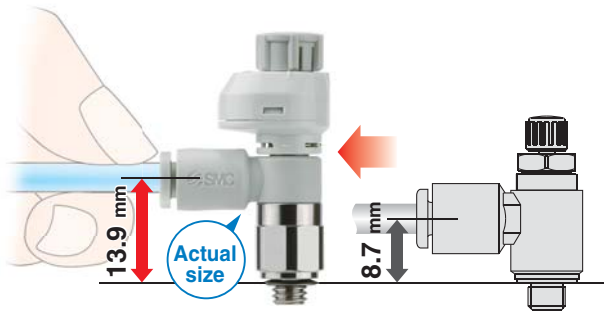

AS-FS Series

Tubing diameter	Thread	Part number
Ø 4	M5	AS12□1FS-M5□-04

Current model

Part number
AS12□1F-M5-04

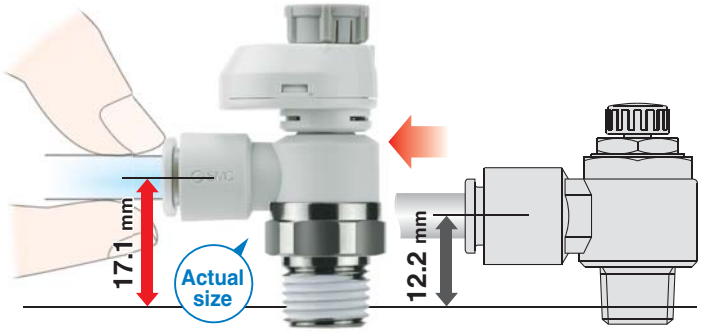

AS-FS Series

Tubing diameter	Thread	Part number
Ø 6	1/4	AS22□1FS-02-06S

Current model

Part number
AS22□1F-02-06

Easy identification of product type

Series	Release button colour			
	Meter-out	Meter-in	Metric	Inch
AS-FS AS-FS-U□	Grey	Light blue	Light grey	Orange
AS-FSG	Grey	Light blue	White	White

Series Variations

	Seal method	Body size	Port size		Applicable tubing O.D.														Metal parts material	Applicable tubing material
					Metric size								Inch size							
					2	3.2	4	6	8	10	12	16	1/8"	5/32"	1/4"	5/16"	3/8"	1/2"		
	Gasket seal	1	M5 x 0.8		Note)														• Brass/ Steel wire • Stainless steel	Nylon (Series T,TIA) Soft nylon (Series TS,TISA) Polyurethane (Series T,TIUB) Fluoropolymer (Series TLM,TILM) (Series TH,TIH)
			10-32UNF		Note)															
	Sealant	2	R NPT	1/8						Note)										
				1/4		Note)								Note)						
		3		1/4																
				3/8																
		4		1/2								Note)								
	Face seal	2	G	1/8						Note)										
				1/4		Note)														
		3		1/4																
				3/8																
		4		1/2								Note)								
	Gasket seal	2	Uni	1/8		Note)	Note)	Note)	Note)	Note)				Note)	Note)	Note)	Note)			• Brass/ Steel wire	
				1/4		Note)	Note)	Note)	Note)	Note)				Note)	Note)	Note)	Note)	Note)		
		3		1/4				Note)	Note)	Note)	Note)					Note)	Note)	Note)		
				3/8				Note)	Note)	Note)	Note)					Note)	Note)	Note)		
		4		1/2						Note)	Note)	Note)						Note)	Note)	

Note) Universal type is not available.

◎**Electroless nickel plating type is standardised.**
◎**Stainless steel type is standardised.**
◎**G thread (Face seal) type is standardised.**

Restrictor (Made to Order ➡ p. 15, 27)

• Flow control of air blow and air purge

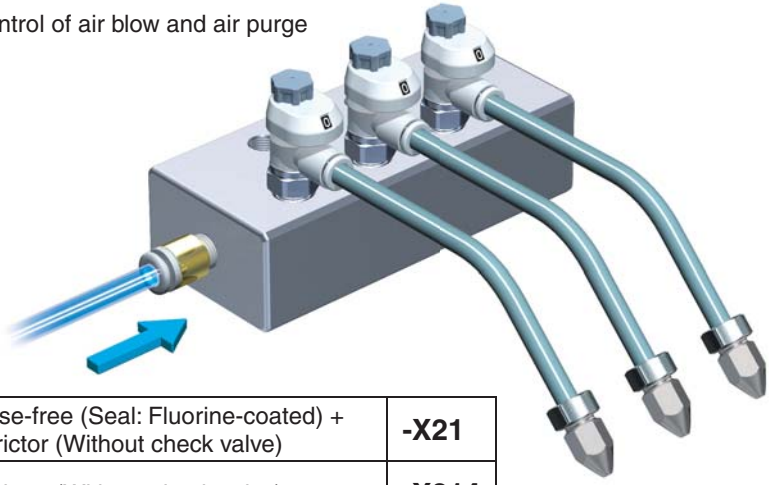

Grease-free (Seal: Fluorine-coated) + Restrictor (Without check valve)	**-X21**
Restrictor (Without check valve)	**-X214**

Speed Controller with Indicator
Elbow Type/Universal Type
AS-FS Series

RoHS

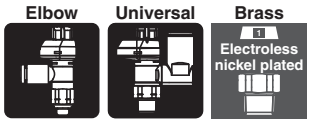

Model

Model	Port size		Seal method	Applicable tubing O.D.														Note 3) Max. number of rotations
				Metric size								Inch size						
				2 Note 2)	3.2	4	6	8	10	12	16	1/8"	5/32"	1/4"	5/16"	3/8"	1/2"	
AS1□□1FS□-M5□	M5 x 0.8		Gasket seal	●Note 4)	●	●	●					●	●	●				8
AS1□□1FS□-U10/32□	10-32UNF			●Note 4)	●	●	●					●	●	●				
AS2□□1FS□-□01	R NPT	1/8	Note 1) Sealant		●	●	●	●	●Note 4)			●	●	●	●			10
AS2□□1FS□-□02		1/4			●Note 4)	●	●	●	●			●Note 4)	●	●	●	●		
AS3□□1FS□-□02		1/4					●	●	●	●				●	●	●		
AS3□□1FS□-□03		3/8					●	●	●	●				●	●	●		
AS4□□1FS□-□04		1/2							●	●	●Note 4)					●	●	
AS2□□1FS□-G01	G	1/8	Face seal		●	●	●	●	●Note 4)									
AS2□□1FS□-G02		1/4			●Note 4)	●	●	●	●									
AS3□□1FS□-G02		1/4					●	●	●	●								
AS3□□1FS□-G03		3/8					●	●	●	●								
AS4□□1FS□-G04		1/2							●	●	●Note 4)							

Note 1) "Without sealant" type can be selected as a standard option.
Note 2) Only polyurethane tubing is applicable for Ø 2.
Note 3) There are differences in actual rate as by the indicator window over the maximum number of rotations depending on the individual product.
Note 4) Universal type is not available.

Flow Direction Symbols on Body

	Meter-out	Meter-in
Symbol	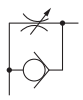	

Specifications

Fluid	Air
Proof pressure	1.5 MPa
Max. operating pressure	1 MPa
Min. operating pressure	0.1 MPa
Ambient and fluid temperature	–5 to 60°C (No freezing)
Applicable tubing material	Nylon, Soft nylon, Polyurethane Note), FEP, PFA

Note) Use caution at the max. operating pressure when using soft nylon or polyurethane tubing. (Refer to the **WEB catalogue**)

⚠ Caution

Be sure to read this before handling. Refer to the back cover for Safety Instructions. For Flow Control Equipment Precautions, refer to the "Handling Precautions for SMC Products" and "Operation Manual" on the SMC website, http://www.smc.eu

Flow Rate and Sonic Conductance

Model		AS1□□1FS-M5□		AS2□□1FS-01			AS2□□1FS-02				AS3□□1FS			AS4□□1FS	
Tubing O.D.	Metric size	Ø 2	Ø 3.2 Ø 4 Ø 6	Ø 3.2	Ø 4	Ø 6 Ø 8 Ø 10	Ø 3.2	Ø 4	Ø 6	Ø 8 Ø 10	Ø 6	Ø 8	Ø 10 Ø 12	Ø 10	Ø 12 Ø 16
	Inch size	—	Ø 1/8" Ø 1/4" Ø 5/32"	Ø 1/8"	Ø 5/32"	Ø 1/4" Ø 5/16"	Ø 1/8"	Ø 5/32"	—	Ø 1/4" Ø 5/16" Ø 3/8"	Ø 1/4"	Ø 5/16"	Ø 3/8"	Ø 3/8"	Ø 1/2"
C values: Sonic conductance [dm³/(s·bar)]	Free flow	0.2	0.3	0.4	0.6	0.6	0.7	1.0	1.3	1.5	1.6	1.7	2.5	4.4	4.8
	Controlled flow	0.2	0.3	0.4	0.7	0.8	0.6	0.9	1.3		2.1	2.4	3.3	4.4	4.9
b values: Critical pressure ratio	Free flow	0.3	0.4	0.2		0.3	0.3		0.4		0.4		0.3	0.3	
	Controlled flow	0.2		0.2		0.3	0.3				0.3			0.3	

Note 1) 10-32UNF has the same specification as M5.
Note 2) C and b values are for controlled flow with the needle fully open and free flow with the needle fully closed.

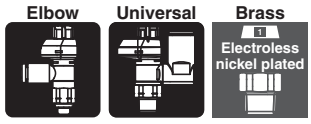

How to Order

Body size 1 AS 1 2 0 1F S □ – M5 E – 06 – □

Body size 2/3/4 AS 2 2 0 1F S □ – □ 01 – 06 S – □

Body size

1	M5 x 0.8 10-32UNF

Port size

M5	M5 x 0.8
U10/32	10-32UNF

Width across flats (H)

E	8 mm
—	9 mm

Applicable tubing O.D. Note 1)

Metric size

02	Ø 2
23	Ø 3.2 Note 2)
04	Ø 4
06	Ø 6

Inch size

01	Ø 1/8"
03	Ø 5/32"
07	Ø 1/4"

Note 1) For selecting applicable tubing O.D., refer to the "Model" on page 4.
Metric size and inch size types can be visually identified by colour of the release button.
Metric size: Light grey
Inch size: Orange
Note 2) Use Ø 1/8" tubing.

Body size

2	1/8, 1/4
3	3/8
4	1/2

Type

2	Elbow
3	Universal

Control type Note)

0	Meter-out
1	Meter-in

Note) Meter-out and meter-in types can be visually identified by colour of the knob.
Meter-out: Grey
Meter-in: Light blue

With indicator

Made to Order
Refer to page 15 for details.

Seal method

—	Without sealant
S	With sealant

∗ Face seal type is used for the G thread type.
Select "—/Without sealant".
Example) AS2201FS-G01-06

Applicable tubing O.D.∗1

Metric size

23	Ø 3.2∗2
04	Ø 4
06	Ø 6
08	Ø 8
10	Ø 10
12	Ø 12
16	Ø 16

Inch size∗3

01	Ø 1/8"
03	Ø 5/32"
07	Ø 1/4"
09	Ø 5/16"
11	Ø 3/8"
13	Ø 1/2"

∗1 For selecting applicable tubing O.D., refer to the "Model" on page 4.
∗2 Use Ø 1/8" tubing.
∗3 Only the metric size is available for the G thread type.

Port size

01	1/8
02	1/4
03	3/8
04	1/2

Thread type

—	R
N	NPT
G	G

Indicator window direction

		Elbow	Universal
—	0° 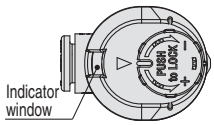	●	—
1	180° 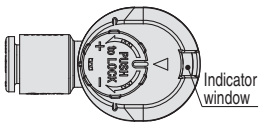	●	●
2	90° 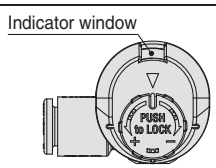	●	—
3	270° 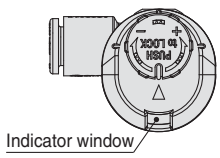	●	—

Note) Orientation of indicator direction is fixed when manufacturing, and cannot be changed by the user. In addition, the universal type is only available with 180° setting.

Made to Order
(For details, refer to page 15.)

Symbol	Specifications
-X12	Lubricant: Vaseline
-X21	Grease-free (Seal: Fluorine-coated) + Restrictor (Without check valve)
-X214	Restrictor (Without check valve)
10-	Clean series

Needle Valve/Flow Rate Characteristics

AS1□01FS□-M5□, AS1□11FS□-M5□

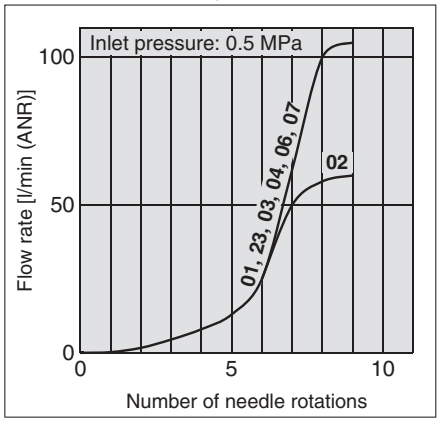

Note) -U10/32 has the same specification as M5.

AS2□01FS□-01, AS2□11FS□-01

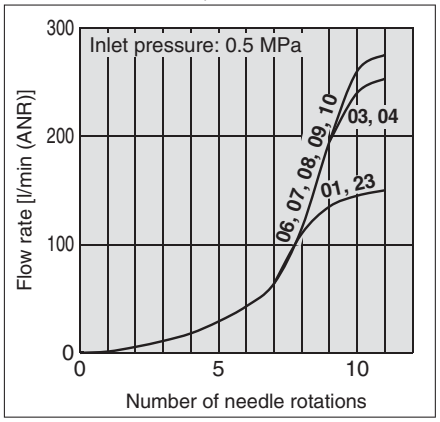

AS2□01FS□-02, AS2□11FS□-02

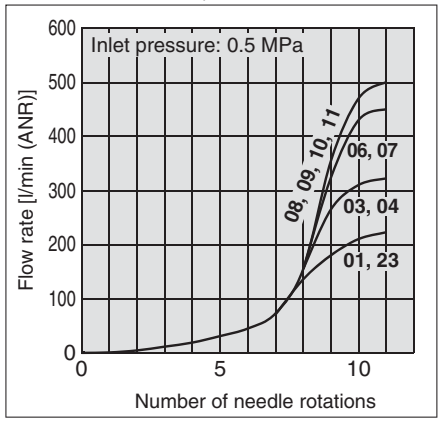

AS3□01FS□, AS3□11FS□

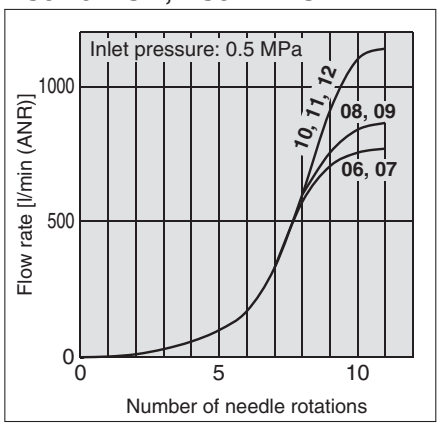

AS4□01FS□, AS4□11FS□

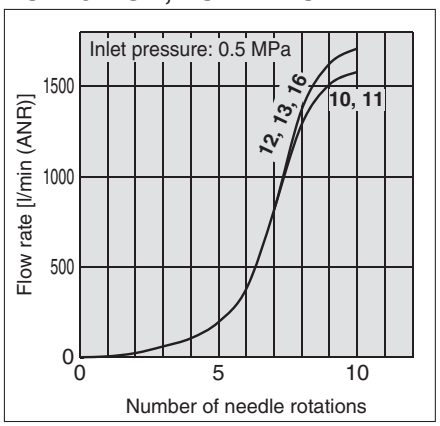

Note) The numbers above the flow rate characteristic curves in the charts show the applicable tubing outside diameter as defined by the product number.

Construction: Elbow Type

Seal method: Gasket seal
For M5, 10-32UNF

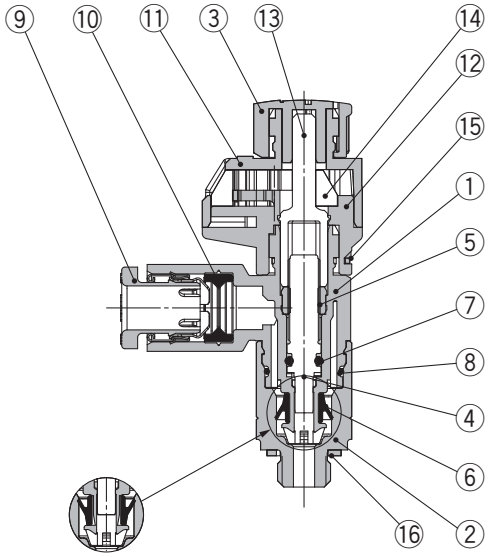

Meter-in type Meter-out type

Seal method: Sealant
For R, NPT thread

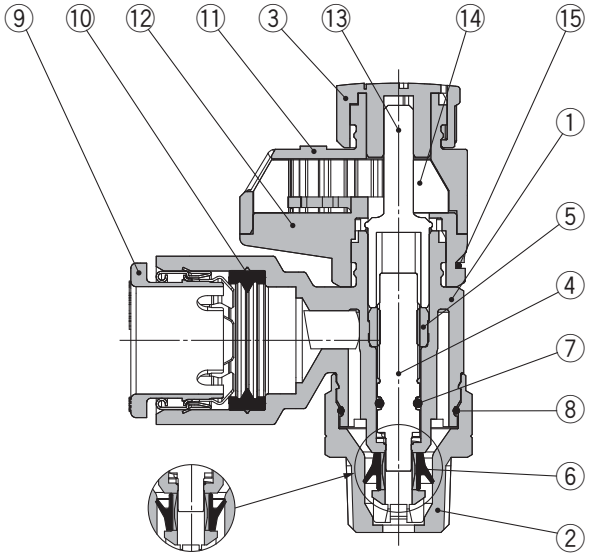

Meter-in type Meter-out type

Seal method: Face seal
For G thread

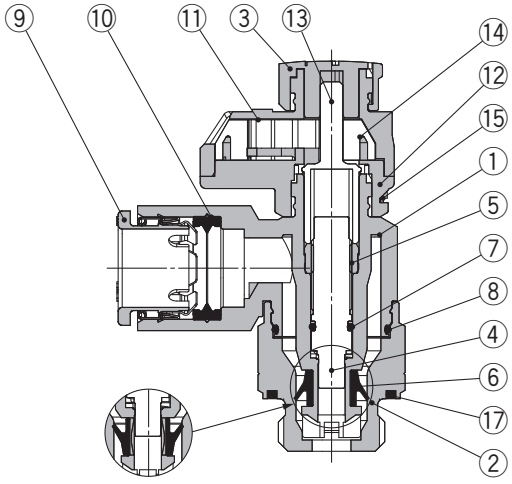

Meter-in type Meter-out type

Component Parts

No.	Description	Material	Note
1	**Body A**	PBT	
2	**Body B**	Brass	Electroless nickel plating
3	**Knob**	POM	
4	**Needle**	PBT	
5	**Needle guide**	Brass	Electroless nickel plating
6	**U-seal**	HNBR	
7	**O-ring**	NBR	
8	**O-ring**	NBR	
9	**Cassette**	—	
10	**Seal**	NBR	
11	**Bonnet A**	POM	
12	**Bonnet B**	POM	
13	**Gear**	POM	
14	**Indicator gear**	POM	
15	**Clip**	Stainless steel	
16	**Gasket**	NBR/Stainless steel	
17	**Seal**	NBR	

Construction: Universal Type

Seal method: Gasket seal
For M5, 10-32UNF

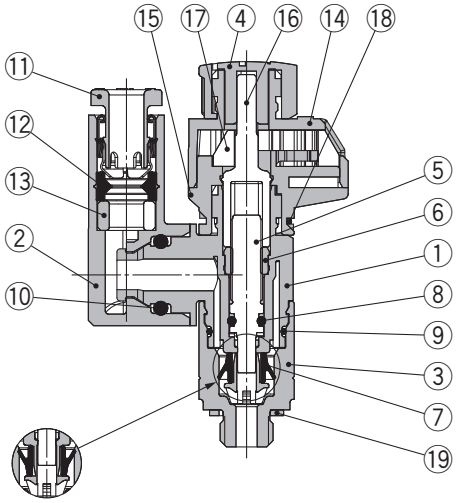

Meter-in type Meter-out type

Seal method: Sealant
For R, NPT thread

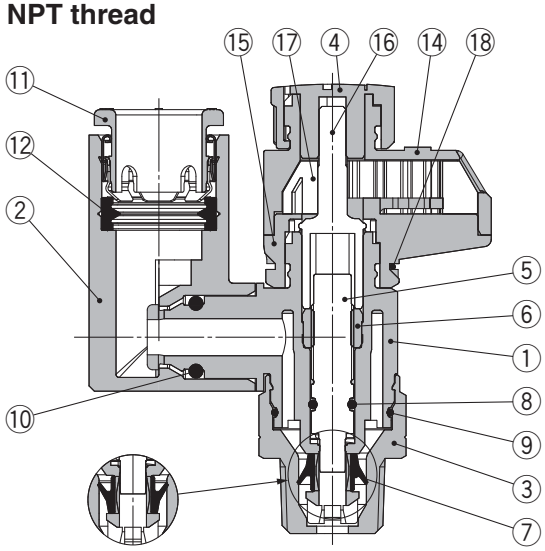

Meter-in type Meter-out type

Seal method: Face seal
For G thread

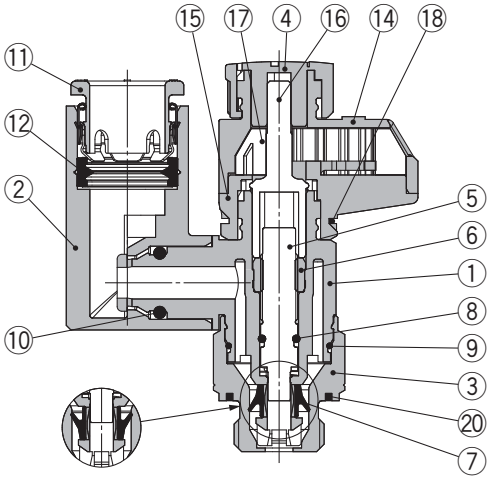

Meter-in type Meter-out type

Component Parts

No.	Description	Material	Note
1	**Body A**	PBT	
2	**Elbow body**	PBT	
3	**Body B**	Brass	Electroless nickel plating
4	**Knob**	POM	
5	**Needle**	PBT	
6	**Needle guide**	Brass	Electroless nickel plating
7	**U-seal**	HNBR	
8	**O-ring**	NBR	
9	**O-ring**	NBR	
10	**O-ring**	NBR	
11	**Cassette**	—	
12	**Seal**	NBR	
13	**Spacer**	PBT	Ø 3.2 and Ø 1/8" only
14	**Bonnet A**	POM	
15	**Bonnet B**	POM	
16	**Gear**	POM	
17	**Indicator gear**	POM	
18	**Clip**	Stainless steel	
19	**Gasket**	NBR/Stainless steel	
20	**Seal**	NBR	

Dimensions: Elbow Type

Seal method: Gasket seal
For M5, 10-32UNF

Indicator window direction: 0°

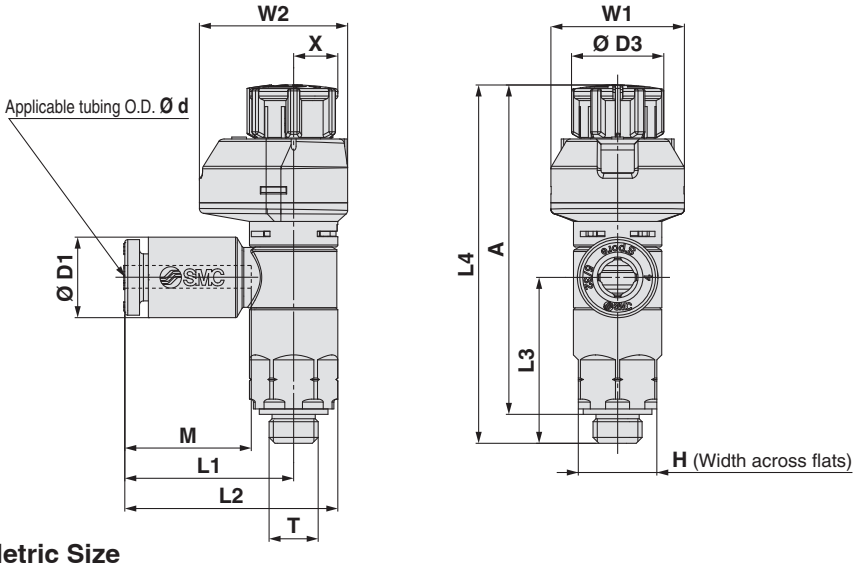

Indicator window direction: 180°

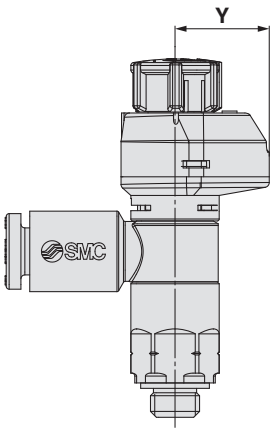

Metric Size

[mm]

Model	d	T	H*1	D1	D3	L1	L2	L3	L4*2		A*3		M	W1	W2	X	Y	Weight [g]
									Unlocked	Locked	Unlocked	Locked						
AS12□1FS□-M5E-02	2	M5 x 0.8 10/32UNF	8 (9)	5.8	9.4	15.8	20.3	16.9	39	36.5	35	33.5	11.9	13.6	15.1	5.5	9.6	7
AS12□1FS□-U10/32E-02																		
AS12□1FS□-M5E-23	3.2			7.2		17.2	21.7						13.3					
AS12□1FS□-U10/32E-23																		
AS12□1FS□-M5E-04	4			8.2														
AS12□1FS□-U10/32E-04																		
AS12□1FS□-M5E-06	6			10.4		18.6	23.1	16.5										8
AS12□1FS□-U10/32E-06																		

*1 The value in ( ) indicates that the dimension for the width across flats is 9 mm.
*2 Reference dimensions
*3 Reference dimensions of threads after installation

Inch Size

[mm]

Model	d	T	H*1	D1	D3	L1	L2	L3	L4*2		A*3		M	W1	W2	X	Y	Weight [g]
									Unlocked	Locked	Unlocked	Locked						
AS12□1FS□-M5E-01	1/8"	M5 x 0.8 10/32UNF	8 (9)	7.2	9.4	17.2	21.7	16.9	39	36.5	35	33.5	13.3	13.6	15.1	5.5	9.6	7
AS12□1FS□-U10/32E-01																		
AS12□1FS□-M5E-03	5/32"			8.2														
AS12□1FS□-U10/32E-03																		
AS12□1FS□-M5E-07	1/4"			11.2		18.6	23.1	16.5										8
AS12□1FS□-U10/32E-07																		

*1 The value in ( ) indicates that the dimension for the width across flats is 9 mm.
*2 Reference dimensions
*3 Reference dimensions of threads after installation

Dimensions: Universal Type

Seal method: Gasket seal
For M5, 10-32UNF

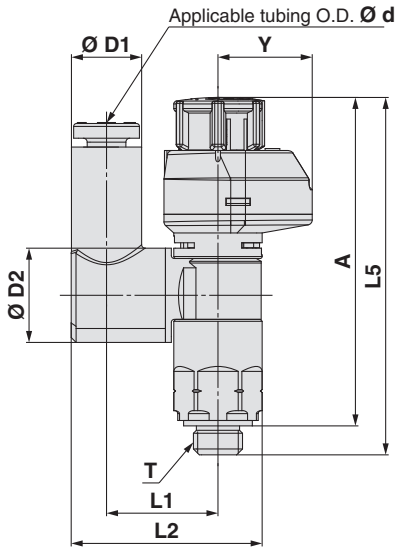

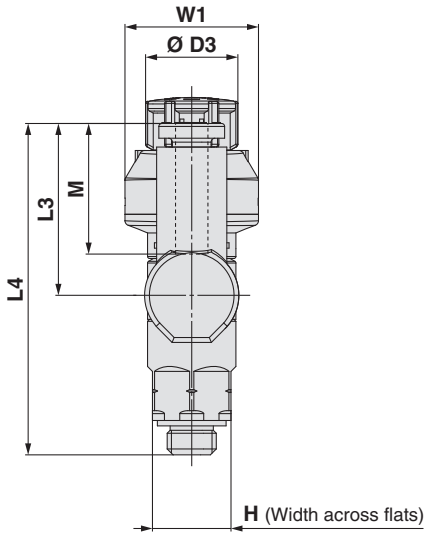

Metric Size

[mm]

Model	d	T	H∗1	D1	D2	D3	L1	L2	L3	L4	L5∗2		A∗3		M	W1	Y	Weight [g]
											Unlocked	Locked	Unlocked	Locked				
AS13□1FS1-M5E-23	3.2	M5 x 0.8 10/32UNF	8 (9)	7.2	9.6	9.4	11.6	19.4	17.5	33.8	39	36.5	35	33.5	13.3	13.6	9.6	7
AS13□1FS1-U10/32-23																		
AS13□1FS1-M5E-04	4			8.2			11.5	19.8										
AS13□1FS1-U10/32-04																		
AS13□1FS1-M5E-06	6			10.4				20.9	20.4	36.6								8
AS13□1FS1-U10/32-06																		

∗1 The value in ( ) indicates that the dimension for the width across flats is 9 mm.
∗2 Reference dimensions
∗3 Reference dimensions of threads after installation

Inch Size

[mm]

Model	d	T	H∗1	D1	D2	D3	L1	L2	L3	L4	L5∗2		A∗3		M	W1	Y	Weight [g]
											Unlocked	Locked	Unlocked	Locked				
AS13□1FS1-M5E-01	1/8	M5 x 0.8 10/32UNF	8 (9)	7.2	9.6	9.4	11.6	19.4	17.5	33.8	39	36.5	35	33.5	13.3	13.6	9.6	7
AS13□1FS1-U10/32-01																		
AS13□1FS1-M5E-03	5/32			8.2			11.5	19.8										
AS13□1FS1-U10/32-03																		
AS13□1FS1-M5E-07	1/4			11.2				21.3	20.4	36.6								8
AS13□1FS1-U10/32-07																		

∗1 The value in ( ) indicates that the dimension for the width across flats is 9 mm.
∗2 Reference dimensions
∗3 Reference dimensions of threads after installation

Dimensions: Elbow Type

Seal method: Sealant
For R, NPT thread

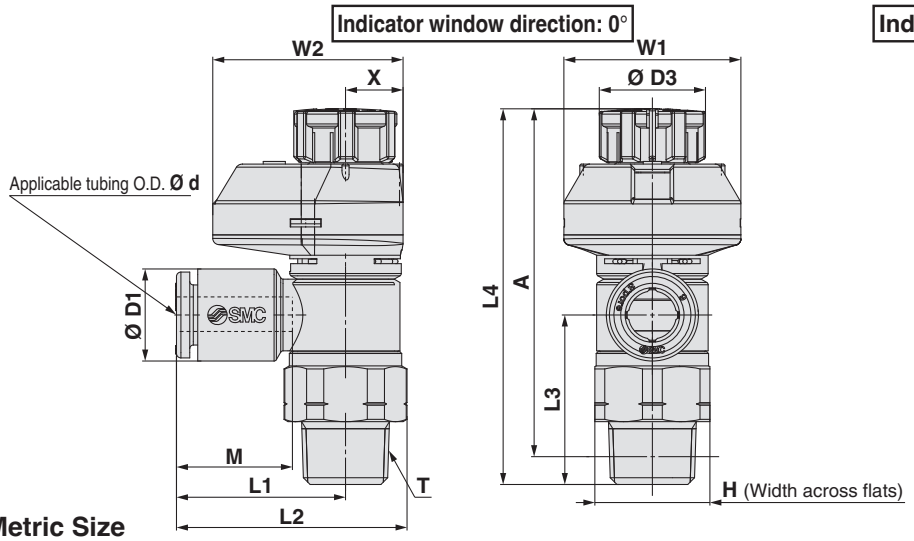

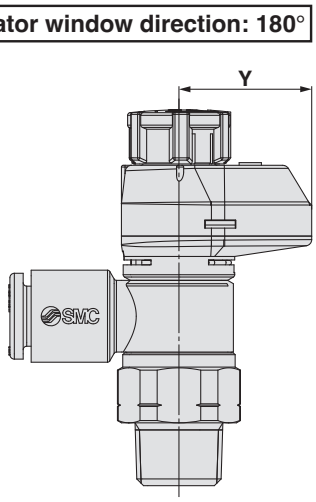

Metric Size

[mm]

Model	d	T (R, NPT)	H	D1	D3	L1	L2	L3	L4∗1 Unlocked	L4∗1 Locked	A∗2 Unlocked	A∗2 Locked	M	W1	W2	X	Y	Weight [g]
AS22□1FS□-01-23 (S)	3.2	1/8	13 (12.7)	7.2	12	19.1	26.2	19.1	43.9	42.4	40.8	39.3	13.3	20	21.5	6.5	15	13 (13)
AS22□1FS□-01-04 (S)	4			8.2														
AS22□1FS□-01-06 (S)	6			10.4														14 (13)
AS22□1FS□-01-08 (S)	8			13.2		22.4	29.5						14.2					15 (14)
AS22□1FS□-01-10 (S)	10			15.9		25.3	32.4						15.6					16 (15)
AS22□1FS□-02-23 (S)	3.2	1/4	17 (17.5)	7.2	13	20.9	30.2 (30.3)	22.6	49.7	48.3	44.2	42.8	13.3	21.5	24	7.8	16.2	23 (24)
AS22□1FS□-02-04 (S)	4			8.2														
AS22□1FS□-02-06 (S)	6			10.4		23.4	32.7 (32.8)											
AS22□1FS□-02-08 (S)	8			13.2		23.9	33.2 (33.3)						14.2					24 (25)
AS22□1FS□-02-10 (S)	10			15.9		26.9	36.2 (36.3)						15.6					25 (26)
AS32□1FS□-02-06 (S)	6	1/4	19	10.4	16.6	21.8	32.1	36.4	63.1	61.7	57.9	56.5	13.3	24.5	28.5	9.3	19.2	47 (48)
AS32□1FS□-02-08 (S)	8			13.2		22.7	33						14.2					
AS32□1FS□-02-10 (S)	10			15.9		26.7	37	35.7					15.6					38 (39)
AS32□1FS□-02-12 (S)	12			18.5		29.7	40	34.5					17					50 (51)
AS32□1FS□-03-06 (S)	6	3/8	19	10.4	16.6	21.8	32.1	28.7	55.4	54	50.2	48.8	13.3	24.5	28.5	9.3	19.2	38 (39)
AS32□1FS□-03-08 (S)	8			13.2		22.7	33						14.2					
AS32□1FS□-03-10 (S)	10			15.9		26.7	37	28					15.6					39 (40)
AS32□1FS□-03-12 (S)	12			18.5		29.7	40	26.8					17					41 (42)
AS42□1FS□-04-10 (S)	10	1/2	24 (23.8)	15.9	18.8	27.4	40.3 (40.2)	36.2	64.1	62.5	57	55.4	15.6	26	29	10	19	62 (61)
AS42□1FS□-04-12 (S)	12			18.5		30.8	43.7 (43.6)	35.1					17					64 (63)
AS42□1FS□-04-16 (S)	16			23.8		34.8	47.7 (47.6)	32.7					20.6					68 (67)

∗1 Reference dimensions ∗2 Reference dimensions of threads after installation ∗ The values in ( ) are for NPT thread.

Inch Size

[mm]

Model	d	T (R, NPT)	H	D1	D3	L1	L2	L3	L4∗1 Unlocked	L4∗1 Locked	A∗2 Unlocked	A∗2 Locked	M	W1	W2	X	Y	Weight [g]
AS22□1FS□-01-01 (S)	1/8"	1/8	13 (12.7)	7.2	12	19.1	26.2	19.1	43.9	42.4	40.8	39.3	13.3	20	21.5	6.5	15	13 (13)
AS22□1FS□-01-03 (S)	5/32"			8.2														
AS22□1FS□-01-07 (S)	1/4"			11.2		20.8	27.9											14 (13)
AS22□1FS□-01-09 (S)	5/16"			13.2		22.4	29.5						14.2					15 (14)
AS22□1FS□-02-01 (S)	1/8"	1/4	17 (17.5)	7.2	13	20.9	30.2 (30.3)	22.6	49.7	48.3	44.2	42.8	13.3	21.5	24	7.8	16.2	23 (24)
AS22□1FS□-02-03 (S)	5/32"			8.2														
AS22□1FS□-02-07 (S)	1/4"			11.2		23.4	32.7 (32.8)											24 (24)
AS22□1FS□-02-09 (S)	5/16"			13.2		23.9	33.2 (33.3)						14.2					24 (25)
AS22□1FS□-02-11 (S)	3/8"			15.5		26.4	35.7 (35.8)						15.6					25 (26)
AS32□1FS□-02-07 (S)	1/4"	1/4	19	11.2	16.6	21.8	32.1	36.4	63.1	61.7	57.9	56.5	13.3	24.5	28.5	9.3	19.2	47 (48)
AS32□1FS□-02-09 (S)	5/16"			13.2		22.7	33						14.2					
AS32□1FS□-02-11 (S)	3/8"			15.5		26.7	37	35.9					15.6					48 (49)
AS32□1FS□-03-07 (S)	1/4"	3/8	19	11.2	16.6	21.8	32.1	28.7	55.4	54	50.2	48.8	13.3	24.5	28.5	9.3	19.2	38 (39)
AS32□1FS□-03-09 (S)	5/16"			13.2		22.7	33						14.2					
AS32□1FS□-03-11 (S)	3/8"			15.5		26.7	37	28.2					15.6					39 (40)
AS42□1FS□-04-11 (S)	3/8"	1/2	24 (23.8)	15.5	18.8	27.4	40.3 (40.2)	36.2	64.1	62.5	57	55.4	15.6	26	29	10	19	62 (61)
AS42□1FS□-04-13 (S)	1/2"			19.3		30.9	43.8 (43.7)	34.7					17					64 (63)

∗1 Reference dimensions ∗2 Reference dimensions of threads after installation ∗ The values in ( ) are for NPT thread.

Dimensions: Universal Type

Seal method: Sealant
For R, NPT thread

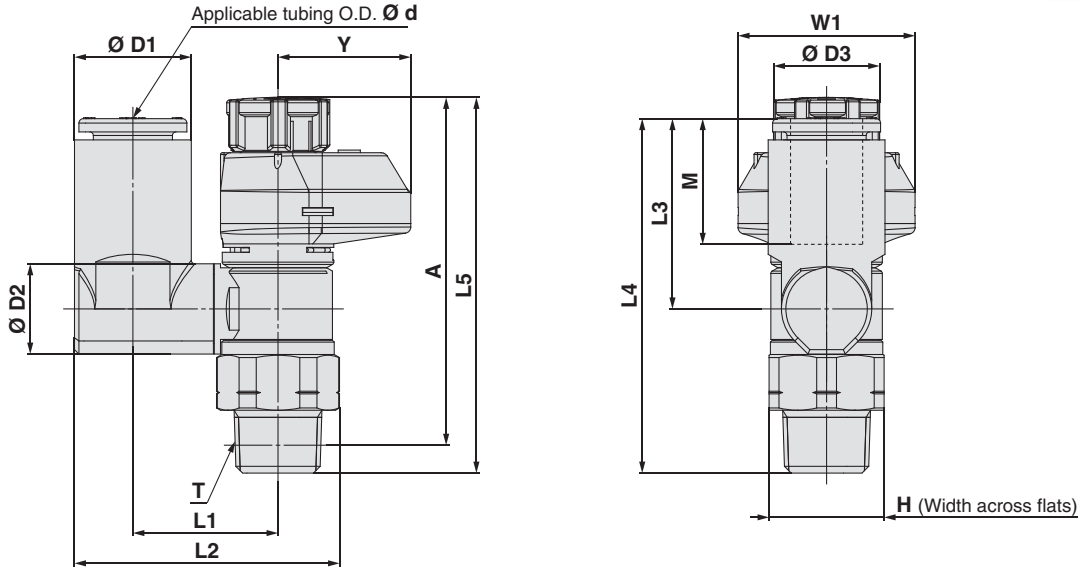

Metric Size

[mm]

Model	d	T	H	D1	D2	D3	L1	L2	L3	L4	L5		A		M	W1	Y	Weight [g]
											Unlocked	Locked	Unlocked	Locked				
AS23□1FS1-01-23 (S)	3.2	1/8	13 (12.7)	7.2	9.6	12	13.3	24	17.5	36	43.9	42.4	40.8	39.3	13.3	20	15	14
AS23□1FS1-01-04 (S)	4			8.2			13.9	25.1										
AS23□1FS1-01-06 (S)	6			10.4				26.2	20.4	38.8								15
AS23□1FS1-01-08 (S)	8			13.2	10.2		16.4	30.1	21.5	40					14.2			16
AS23□1FS1-02-04 (S)	4	1/4	17 (17.5)	8.2	12.9	13	16.5	29.9	17.5	40.1	49.7	48.3	44.2	42.8	13.3	21.5	16.2	24
AS23□1FS1-02-06 (S)	6			11.2			19	33.8	21.4	43.9					14.2			26
AS23□1FS1-02-08 (S)	8			13.2				34.9	23.5	46					15.6			27
AS23□1FS1-02-10 (S)	10			15.9			20.9	38.1	24.7	47.3					17			28
AS33□1FS1-02-06 (S)	6	1/4	19	11.2	12.9	16.6	20.2	36	21.4	57.8	63.1	61.7	57.9	56.5	13.3	24.5	19.2	49
AS33□1FS1-02-08 (S)	8			13.2				37.1	23.5	59.9					14.2			50
AS33□1FS1-02-10 (S)	10			15.9	17.4		23	41.2	26.1	62.5					15.6			53
AS33□1FS1-02-12 (S)	12			18.5				42.5	28.3	64.7					17			55
AS33□1FS1-03-06 (S)	6	3/8	19	10.4	12.9	16.6	20.2	36	21.4	50.1	55.4	54	50.2	48.8	13.3	24.5	19.2	41
AS33□1FS1-03-08 (S)	8			13.2				37.1	23.5	52.2					14.2			42
AS33□1FS1-03-10 (S)	10			15.9	17.4		23	41.2	26.1	54.8					15.6			45
AS33□1FS1-03-12 (S)	12			18.5				42.5	28.3	57					17			47
AS43□1FS1-04-10 (S)	10	1/2	24 (23.8)	15.9	17.4	18.8	25.6	46.4	26.1	61.2	64.1	62.5	57	55.4	15.6	26	19	69
AS43□1FS1-04-12 (S)	12			18.5	21		26.2	48.3	28.3	63.4					17			72

Inch Size

[mm]

Model	d	T	H	D1	D2	D3	L1	L2	L3	L4	L5		A		M	W1	Y	Weight [g]
											Unlocked	Locked	Unlocked	Locked				
AS23□1FS1-01-01 (S)	1/8	1/8	13 (12.7)	7.2	9.6	12	13.3	24	17.5	36	43.9	42.4	40.8	39.3	13.3	20	15	14
AS23□1FS1-01-03 (S)	5/32			8.2			13.9	25.1										
AS23□1FS1-01-07 (S)	1/4			11.2	10.2		16.4	29.1	20.2	38.7								15
AS23□1FS1-01-09 (S)	5/16			13.2				30.1	21.5	40					14.2			16
AS23□1FS1-02-03 (S)	5/32	1/4	17 (17.5)	8.2	12.9	13	16.5	29.9	17.5	40.1	49.7	48.3	44.2	42.8	13.3	21.5	16.2	24
AS23□1FS1-02-07 (S)	1/4			11.2			19	33.8	21.4	43.9								26
AS23□1FS1-02-09 (S)	5/16			13.2				34.9	23.5	46					14.2			27
AS23□1FS1-02-11 (S)	3/8			15.9			20.9	38.1	24.7	47.3					15.6			28
AS33□1FS1-02-07 (S)	1/4	3/8	19	11.2	12.9	16.6	20.2	36	21.4	57.8	63.1	61.7	57.9	56.5	13.3	24.5	19.2	49
AS33□1FS1-02-09 (S)	5/16			13.2				37.1	23.5	59.9					14.2			50
AS33□1FS1-02-11 (S)	3/8			15.9	17.4		23	41.2	26.1	62.5					15.6			53
AS33□1FS1-03-07 (S)	1/4	3/8	19	11.2	12.9	16.6	20.2	36	21.4	50.1	55.4	54	50.2	48.8	13.3	24.5	19.2	41
AS33□1FS1-03-09 (S)	5/16			13.2				37.1	23.5	52.2					14.2			42
AS33□1FS1-03-11 (S)	3/8			15.9	17.4		23	41.2	26.1	54.8					15.6			45
AS43□1FS1-04-11 (S)	3/8	1/2	24 (23.8)	15.9	17.4	18.8	25.6	46.4	26.1	61.2	64.1	62.5	57	55.4	15.6	26	19	69
AS43□1FS1-04-13 (S)	1/2			18.5	21		26.2	48.3	28.3	63.4					17			72

Dimensions: Elbow Type

Seal method: Face seal
For G thread

Indicator window direction: 0°

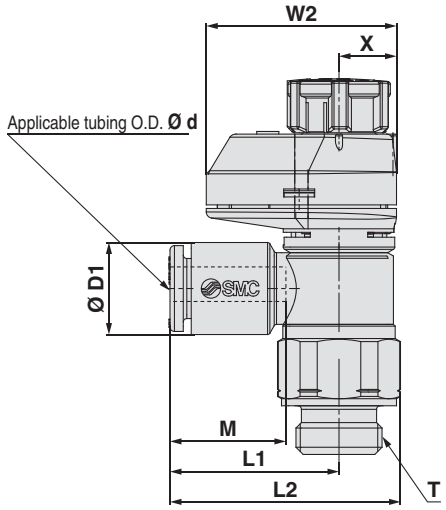

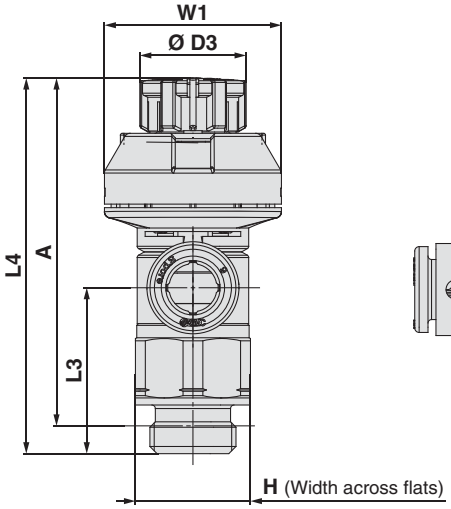

Indicator window direction: 180°

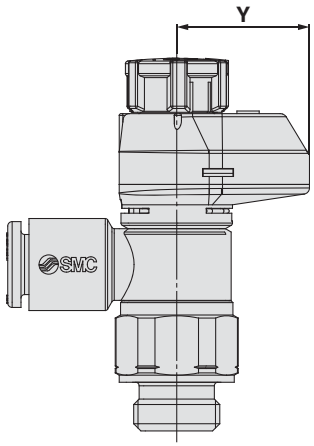

Metric Size

[mm]

Model	d	T	H	D1	D3	L1	L2	L3	L4 Note 1)		A Note 2)		M	W1	W2	X	Y	Weight [g]
									Unlocked	Locked	Unlocked	Locked						
AS22□1FS□-G01-23	3.2	1/8	13	7.2	12	19.1	26.2	18.8	43.8	42.4	38.3	36.9	13.3	20	21.5	6.5	15	14
AS22□1FS□-G01-04	4			8.2														
AS22□1FS□-G01-06	6			10.4														
AS22□1FS□-G01-08	8			13.2		22.4	29.5						14.2					15
AS22□1FS□-G01-10	10			15.9		25.3	32.4						15.6					16
AS22□1FS□-G02-23	3.2	1/4	17	7.2	13	20.9	30.2	22.6	49.7	48.3	43.2	41.8	13.3	21.5	24	7.8	16.2	26
AS22□1FS□-G02-04	4			8.2														
AS22□1FS□-G02-06	6			10.4		23.4	32.7											
AS22□1FS□-G02-08	8			13.2		23.9	33.2						14.2					27
AS22□1FS□-G02-10	10			15.9		26.9	36.2						15.6					28
AS32□1FS□-G02-06	6	1/4	21	10.4	16.6	21.8	33	36.4	63.1	61.7	54.6	53.2	13.3	24.5	28.5	9.3	19.2	55
AS32□1FS□-G02-08	8			13.2		22.7	33.9						14.2					
AS32□1FS□-G02-10	10			15.9		26.7	37.9	35.7					15.6					57
AS32□1FS□-G02-12	12			18.5		29.7	40.9	34.5					17					59
AS32□1FS□-G03-06	6	3/8	21	10.4	16.6	21.8	33	28.7	55.4	54	47.9	46.5	13.3	24.5	28.5	9.3	19.2	45
AS32□1FS□-G03-08	8			13.2		22.7	33.9						14.2					46
AS32□1FS□-G03-10	10			15.9		26.7	37.9	28					15.6					47
AS32□1FS□-G03-12	12			18.5		29.7	40.9	26.8					17					49
AS42□1FS□-G04-10	10	1/2	27	15.9	18.8	27.4	41.8	36.2	64.1	62.5	55.1	53.5	15.6	26	29	10	19	80
AS42□1FS□-G04-12	12			18.5		30.8	45.2	35.1					17					82
AS42□1FS□-G04-16	16			23.8		34.8	49.2	32.7					20.6					86

Note 1) Reference dimensions
Note 2) Reference dimensions of threads after installation

Dimensions: Universal Type

Seal method: Face seal
For G thread

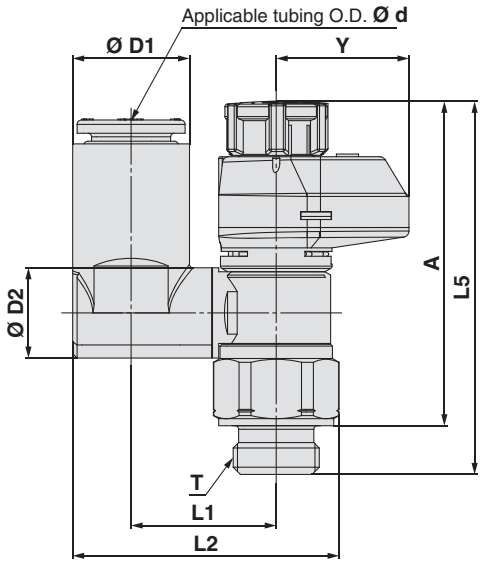

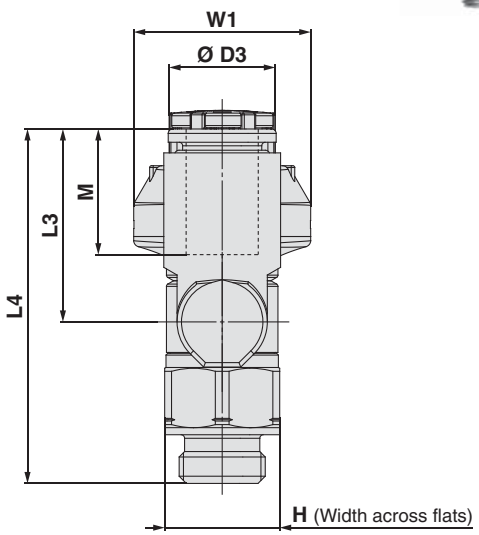

Metric Size

[mm]

Model	d	T	H	D1	D2	D3	L1	L2	L3	L4	L5		A		M	W1	Y	Weight [g]
											Unlocked	Locked	Unlocked	Locked				
AS23□1FS1-G01-23	3.2	1/8	13	7.2	9.6	12	13.2	24	17.5	35.7	43.8	42.4	38.3	36.9	13.3	20	15	14
AS23□1FS1-G01-04	4			8.2			13.9	25.1										15
AS23□1FS1-G01-06	6			10.4				26.2	20.4	38.5								15
AS23□1FS1-G01-08	8			13.2	10.2		16.4	30.1	21.5	39.7					14.2			16
AS23□1FS1-G02-04	4	1/4	17	8.2	12.9	13	16.5	29.9	17.5	40.1	49.7	48.3	43.2	41.8	13.3	21.5	16.2	26
AS23□1FS1-G02-06	6			10.4			19	33.8	21.4	43.9								28
AS23□1FS1-G02-08	8			13.2				34.9	23.5	46					14.2			29
AS23□1FS1-G02-10	10			15.9			20.9	38.1	24.7	47.3					15.6			32
AS33□1FS1-G02-06	6	1/4	21	10.4	12.9	16.6	20.2	36.1	21.4	57.8	63.1	61.7	54.6	53.2	13.3	24.5	19.2	55
AS33□1FS1-G02-08	8			13.2				38	23.5	59.9					14.2			56
AS33□1FS1-G02-10	10			15.9	17.4		23	42.2	26.1	58					15.6			59
AS33□1FS1-G02-12	12			18.5				43.5	28.3	59.9					17			61
AS33□1FS1-G03-06	6	3/8	21	10.4	12.9	16.6	20.2	36.6	21.4	50.1	55.4	54	47.9	46.5	13.3	24.5	19.2	45
AS33□1FS1-G03-08	8			13.2				38	23.5	52.2					14.2			46
AS33□1FS1-G03-10	10			15.9	17.4		23	42.2	28.1	50.3					15.6			47
AS33□1FS1-G03-12	12			18.5				43.5	28.3	52.2					17			49
AS43□1FS1-G04-10	10	1/2	27	15.9	17.4	18.8	25.6	47.9	26.1	61.2	64.1	62.5	55.1	53.5	15.6	26	19	80
AS43□1FS1-G04-12	12			18.5	21		26.2	49.8	28.3	63.4					17			82

AS-FS Series
Made to Order

Please contact SMC for detailed dimensions, specifications and delivery.

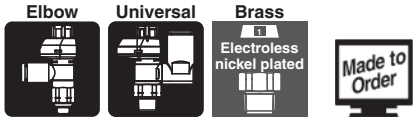

1 Lubricant: Vaseline -X12

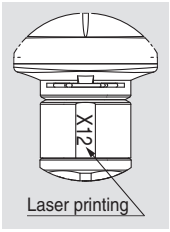

Example) AS2201FS-01-04S-X12

2 Grease-free (Seal: Fluorine-coated) + Restrictor (Without check valve) -X21

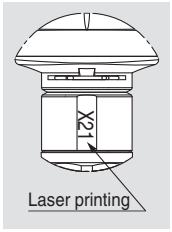

Example) AS2201FS-01-04S-X21

Note 1) Not particle-free
Note 2) This product is a restrictor without a check valve (no control direction). Be aware that all part numbers are for a meter-out type; there is no part number for a meter-in type.
Note 3) Only the needle and O-ring are fluorine-coated.

3 Restrictor (Without check valve) -X214

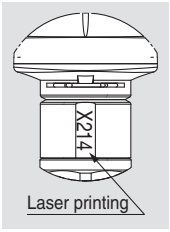

Example) AS2201FS-01-04S-X214

Note) This product is a restrictor without a check valve (no control direction). Be aware that all part numbers are for a meter-out type; there is no part number for a meter-in type.

4 Clean Series 10-

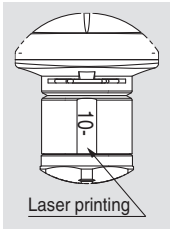

Example) 10-AS2201FS-01-04S

Note 1) Fluorine grease is used.
Note 2) The particle generation class is 5.

Speed Controller with Indicator
Stainless Steel Type
Elbow Type/Universal Type
AS-FSG Series

RoHS

Model

Model	Port size		Seal method	Applicable tubing O.D.														Note 3) Max. number of rotations
				Metric size								Inch size						
				2 Note 2)	3.2	4	6	8	10	12	16	1/8"	5/32"	1/4"	5/16"	3/8"	1/2"	
AS1□□1FSG□-M5	M5 x 0.8		Gasket seal	● Note 4)	●	●	●					●	●	●				8
AS1□□1FSG□-U10/32	10-32UNF			● Note 4)	●	●	●					●	●	●				
AS2□□1FSG□-□01	R NPT	1/8	Note 1) Sealant		●	●	●	●	●			●	●	●	●			10
AS2□□1FSG□-□02		1/4			● Note 4)	●	●	●	● Note 4)			● Note 4)	●	●	●	●		
AS3□□1FSG□-□02		1/4					●	●	●	●				●	●	●		
AS3□□1FSG□-□03		3/8					●	●	●	●				●	●	●		
AS4□□1FSG□-□04		1/2							●	●	● Note 4)					●	●	
AS2□□1FSG□-G01	G	1/8	Face seal		●	●	●	●	● Note 4)									
AS2□□1FSG□-G02		1/4			● Note 4)	●	●	●	●									
AS3□□1FSG□-G02		1/4					●	●	●	●								
AS3□□1FSG□-G03		3/8					●	●	●	●								
AS4□□1FSG□-G04		1/2							●	●	● Note 4)							

Note 1) "Without sealant" type can be selected as a standard option.
Note 2) Only polyurethane tubing is applicable for Ø 2.
Note 3) There are differences in actual rate as by the indicator window over the maximum number of rotations depending on the individual product.
Note 4) Universal type is not available.

Flow Direction Symbols on Body

	Meter-out	Meter-in
Symbol	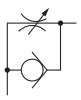	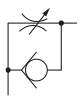

Specifications

Fluid	Air
Proof pressure	1.5 MPa
Max. operating pressure	1 MPa
Min. operating pressure	0.1 MPa
Ambient and fluid temperature	–5 to 60 °C (No freezing)
Applicable tubing material	Nylon, Soft nylon, Polyurethane Note), FEP, PFA

Note) Use caution at the max. operating pressure when using soft nylon or polyurethane tubing. (Refer to the **WEB catalogue**.)

⚠ Caution

Be sure to read this before handling. Refer to the back cover for Safety Instructions. For Flow Control Equipment Precautions, refer to the "Handling Precautions for SMC Products" and "Operation Manual" on the SMC website, http://www.smc.eu

Flow Rate and Sonic Conductance

Model		AS1□□1FSG□-M5		AS2□□1FSG□-01			AS2□□1FSG□-02				AS3□□1FSG□			AS4□□1FSG□	
Tubing O.D.	Metric size	Ø 2	Ø 3.2 Ø 4 Ø 6	Ø 3.2	Ø 4	Ø 6 Ø 8 Ø 10	Ø 3.2	Ø 4	Ø 6	Ø 8 Ø 10	Ø 6	Ø 8	Ø 10 Ø 12	Ø 10	Ø 12 Ø 16
	Inch size	—	Ø 1/8" Ø 1/4" Ø 5/32"	Ø 1/8"	Ø 5/32"	Ø 1/4" Ø 5/16"	Ø 1/8"	Ø 5/32"	—	Ø 1/4" Ø 5/16" Ø 3/8"	Ø 1/4"	Ø 5/16"	Ø 3/8"	Ø 3/8"	Ø 1/2"
C values: Sonic conductance [dm³/(s·bar)]	Free flow	0.2	0.3	0.4	0.6	0.6	0.7	1.0	1.3	1.5	1.6	1.7	2.5	4.4	4.8
	Controlled flow	0.2	0.3	0.4	0.7	0.8	0.6	0.9	1.3		2.1	2.4	3.3	4.4	4.9
b values: Critical pressure ratio	Free flow	0.3	0.4	0.2		0.3	0.3		0.4		0.4		0.3	0.3	
	Controlled flow	0.2		0.2		0.3	0.3				0.3			0.3	

Note 1) 10-32UNF has the same specification as M5.
Note 2) C and b values are for controlled flow with the needle fully open and free flow with the needle fully closed.

How to Order

Elbow | Universal | Stainless steel

Applicable tubing O.D. Note 1)

Metric size		Inch size	
02	Ø 2	**01**	Ø 1/8"
23	Ø 3.2 Note 2)	**03**	Ø 5/32"
04	Ø 4	**07**	Ø 1/4"
06	Ø 6		

Note 1) For selecting applicable tubing O.D., refer to the "Model" on page 16.
Metric size and inch size types can be visually identified by colour of the release button.
Stainless steel type: White
White is also used for inch size.
Note 2) Use Ø 1/8" tubing.

Body size

1	M5 x 0.8 10-32UNF

Port size

M5	M5 x 0.8
U10/32	10-32UNF

Body size 1 AS **1** **2** **0** **1F** **S** **G** □ – **M5** – **06** – □

Body size 2/3/4 AS **2** **2** **0** **1F** **S** **G** □ – □ **01** – **06** **S** – □

Body size

2	1/8, 1/4
3	3/8
4	1/2

Type

2	Elbow
3	Universal

With indicator

Control type Note)

0	Meter-out
1	Meter-in

Note) Meter-out and meter-in types can be visually identified by colour of the knob.
Meter-out: Grey
Meter-in: Light blue

Stainless steel type

Note 1) Metric size and inch size types can be visually identified by colour of the release button.
Stainless steel type: White
Note 2) White is also used for inch size.

Indicator window direction

		Elbow	Universal
—	0°	●	—
1	180°	●	●
2	90°	●	—
3	270°	●	—

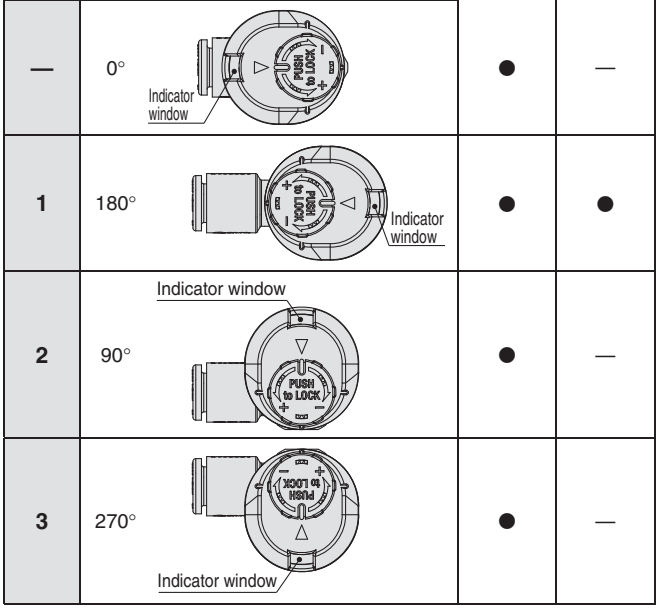

Note) Orientation of indicator direction is fixed when manufacturing, and cannot be changed by the user. In addition, the universal type is only available with 180° setting.

Made to Order
Refer to page 27 for details.

Seal method

—	Without sealant
S	With sealant

∗ Face seal type is used for the G thread type.
Select "—/Without sealant".
Example) AS2201FSG-G01-06

Applicable tubing O.D.∗1

Metric size		Inch size∗3	
23	Ø 3.2∗2	**01**	Ø 1/8"
04	Ø 4	**03**	Ø 5/32"
06	Ø 6	**07**	Ø 1/4"
08	Ø 8	**09**	Ø 5/16"
10	Ø 10	**11**	Ø 3/8"
12	Ø 12	**13**	Ø 1/2"
16	Ø 16		

∗1 For selecting applicable tubing O.D., refer to the "Model" on page 16.
∗2 Use Ø 1/8" tubing.
∗3 Only the metric size is available for the G thread type.

Port size

01	1/8
02	1/4
03	3/8
04	1/2

Thread type

—	R
N	NPT
G	G

Made to Order
(For details, refer to page 27.)

Symbol	Specifications
-X12	Lubricant: Vaseline
-X21	Grease-free (Seal: Fluorine-coated) + Restrictor (Without check valve)
-X214	Restrictor (Without check valve)
10-	Clean series

Needle Valve/Flow Rate Characteristics

AS1□01FSG□-M5, AS1□11FSG□-M5

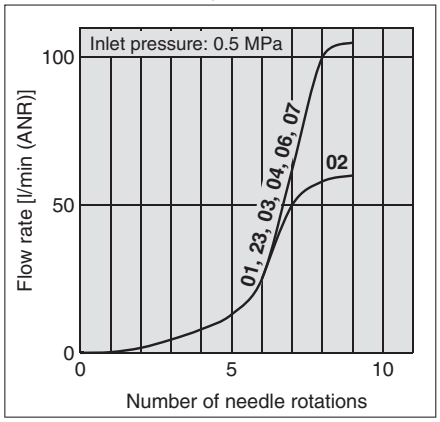

AS2□01FSG□-01, AS2□11FSG□-01

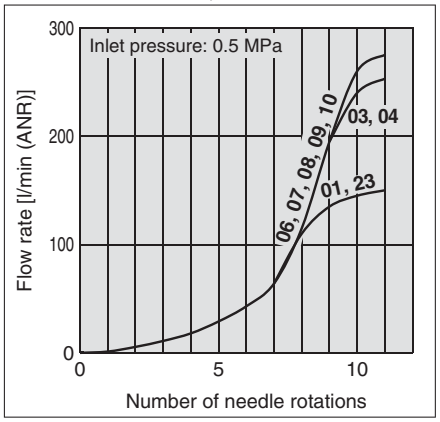

AS2□01FSG□-02, AS2□11FSG□-02

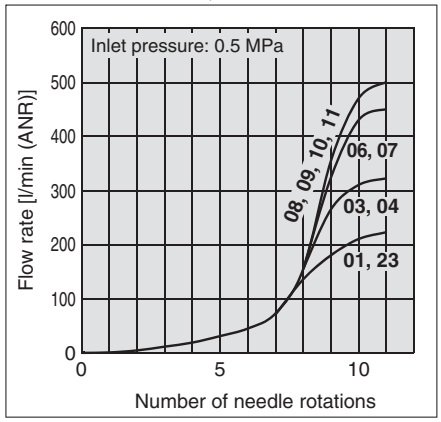

Note) -U10/32 has the same specification as M5.

AS3□01FSG□, AS3□11FSG□

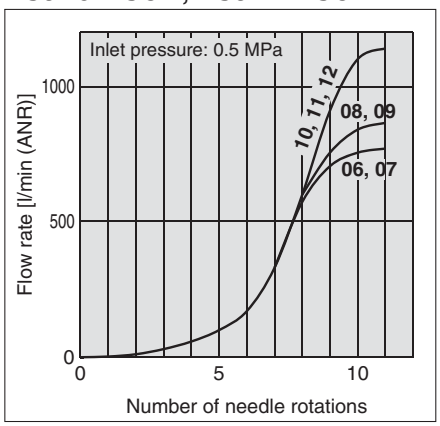

AS4□01FSG□, AS4□11FSG□

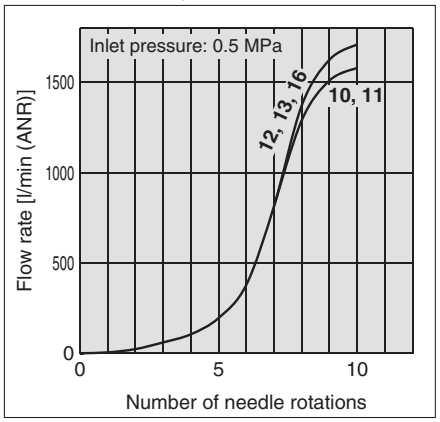

Note) The numbers above the flow rate characteristic curves in the charts show the applicable tubing outside diameter as defined by the product number.

Construction: Elbow Type

Seal method: Gasket seal
For M5, 10-32UNF

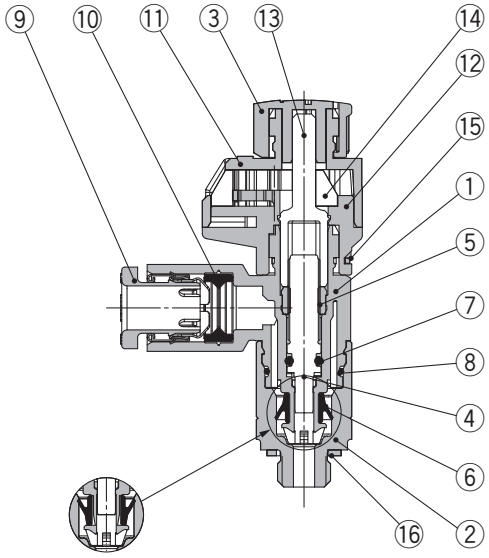

Meter-in type Meter-out type

Seal method: Sealant
For R, NPT thread

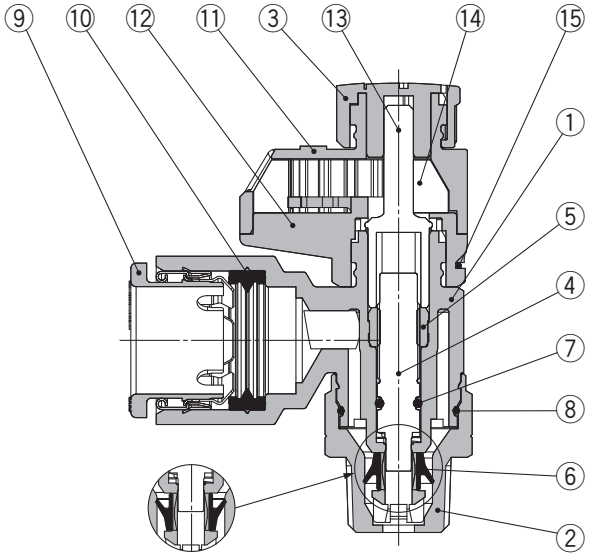

Meter-in type Meter-out type

Seal method: Face seal
For G thread

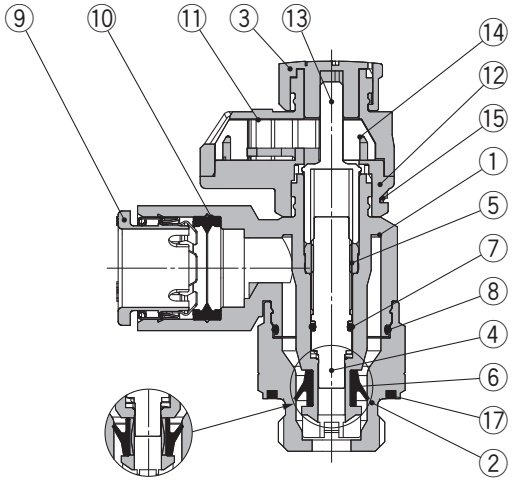

Meter-in type Meter-out type

Component Parts

No.	Description	Material	Note
1	**Body A**	PBT	
2	**Body B**	Stainless steel	
3	**Knob**	POM	
4	**Needle**	PBT	
5	**Needle guide**	Stainless steel	
6	**U-seal**	HNBR	
7	**O-ring**	NBR	
8	**O-ring**	NBR	
9	**Cassette**	—	
10	**Seal**	NBR	
11	**Bonnet A**	POM	
12	**Bonnet B**	POM	
13	**Gear**	POM	
14	**Indicator gear**	POM	
15	**Clip**	Stainless steel	
16	**Gasket**	NBR/Stainless steel	
17	**Seal**	NBR	

Construction: Universal Type

Seal method: Gasket seal
For M5, 10-32UNF

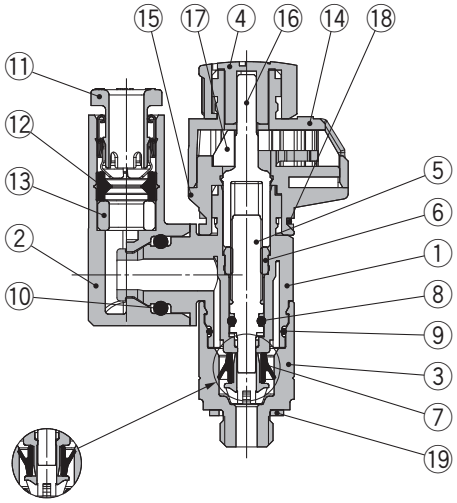

Meter-in type Meter-out type

Seal method: Sealant
For R, NPT thread

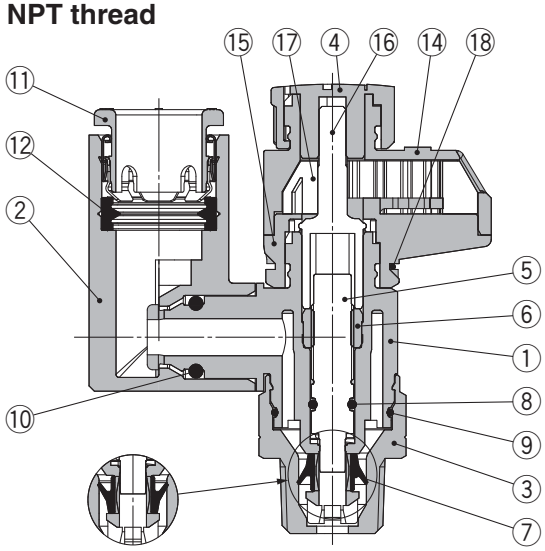

Meter-in type Meter-out type

Seal method: Face seal
For G thread

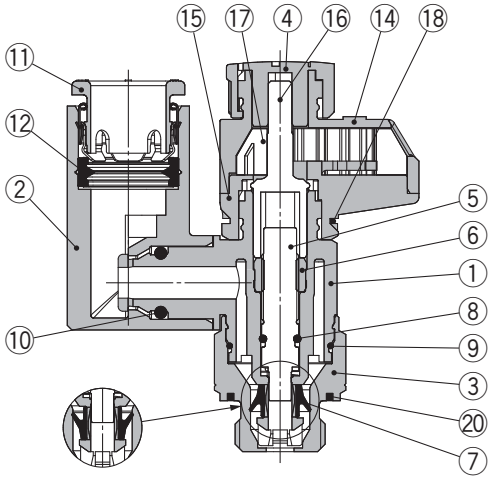

Meter-in type Meter-out type

Component Parts

No.	Description	Material	Note
1	**Body A**	PBT	
2	**Elbow body**	PBT	
3	**Body B**	Stainless steel	
4	**Knob**	POM	
5	**Needle**	PBT	
6	**Needle guide**	Stainless steel	
7	**U-seal**	HNBR	
8	**O-ring**	NBR	
9	**O-ring**	NBR	
10	**O-ring**	NBR	
11	**Cassette**	—	
12	**Seal**	NBR	
13	**Spacer**	PBT	Ø 3.2 and Ø 1/8" only
14	**Bonnet A**	POM	
15	**Bonnet B**	POM	
16	**Gear**	POM	
17	**Indicator gear**	POM	
18	**Clip**	Stainless steel	
19	**Gasket**	NBR/Stainless steel	
20	**Seal**	NBR	

Dimensions: Elbow Type

Seal method: Gasket seal
For M5, 10-32UNF

Indicator window direction: 0°

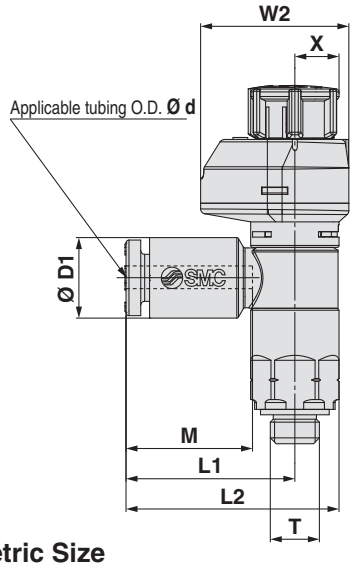

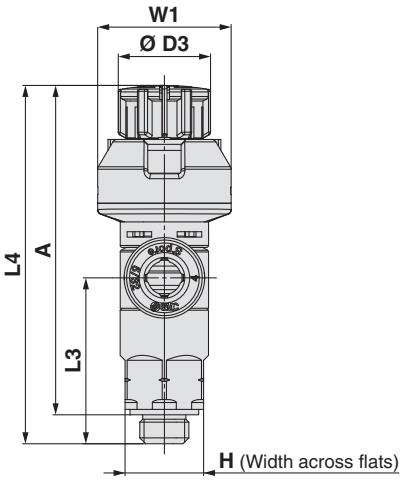

Indicator window direction: 180°

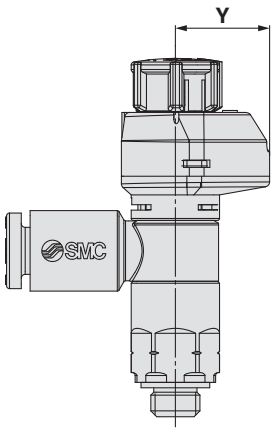

Metric Size

[mm]

Model	d	T	H	D1	D3	L1	L2	L3	L4 Note 1)		A Note 2)		M	W1	W2	X	Y	Weight [g]
									Unlocked	Locked	Unlocked	Locked						
AS12□1FSG□-M5-02	2	M5 x 0.8 10/32UNF	8	5.8	9.4	15.8	20.3	16.9	39	36.5	35	33.5	11.9	13.6	15.1	5.5	9.6	7
AS12□1FSG□-U10/32-02																		
AS12□1FSG□-M5-23	3.2			7.2		17.2	21.7						13.3					
AS12□1FSG□-U10/32-23																		
AS12□1FSG□-M5-04	4			8.2														
AS12□1FSG□-U10/32-04																		
AS12□1FSG□-M5-06	6			10.4		18.6	23.1	16.5										8
AS12□1FSG□-U10/32-06																		

Note 1) Reference dimensions
Note 2) Reference dimensions of threads after installation

Inch Size

[mm]

Model	d	T	H	D1	D3	L1	L2	L3	L4 Note 1)		A Note 2)		M	W1	W2	X	Y	Weight [g]
									Unlocked	Locked	Unlocked	Locked						
AS12□1FSG□-M5-01	1/8"	M5 x 0.8 10/32UNF	8	7.2	9.4	17.2	21.7	16.9	39.0	36.5	35	33.5	13.3	13.6	15.1	5.5	9.6	7
AS12□1FSG□-U10/32-01																		
AS12□1FSG□-M5-03	5/32"			8.2														
AS12□1FSG□-U10/32-03																		
AS12□1FSG□-M5-07	1/4"			11.2		18.6	23.1	16.5										8
AS12□1FSG□-U10/32-07																		

Note 1) Reference dimensions
Note 2) Reference dimensions of threads after installation

Dimensions: Universal Type

Seal method: Gasket seal
For M5, 10-32UNF

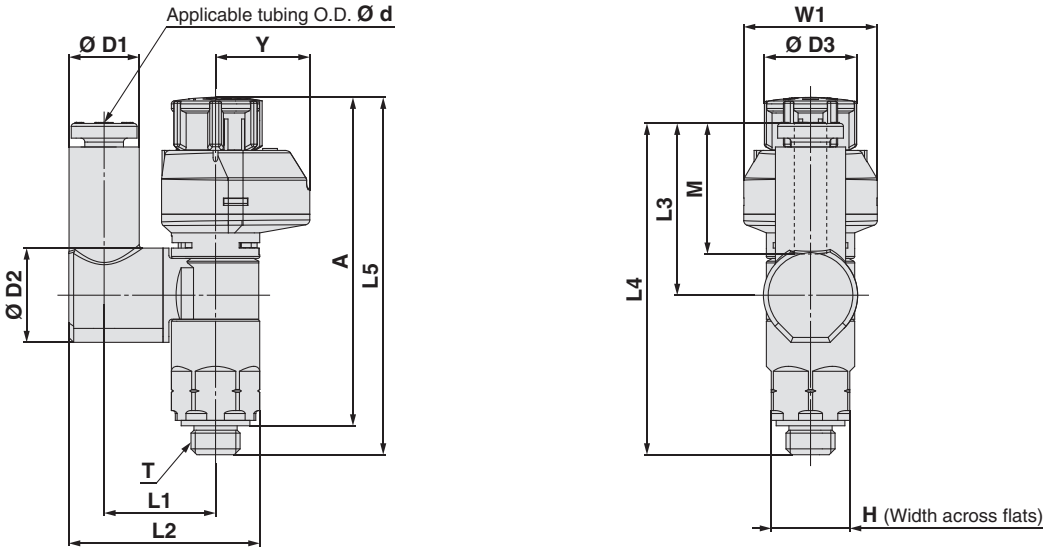

Metric Size

[mm]

Model	d	T	H	D1	D2	D3	L1	L2	L3	L4	L5*1		A*2		M	W1	Y	Weight [g]
											Unlocked	Locked	Unlocked	Locked				
AS13□1FSG1-M5-23	3.2	M5 x 0.8 10/32UNF	8	7.2	9.6	9.4	11.6	19.4	17.5	33.8	39	36.5	35	33.5	13.3	13.6	9.6	7
AS13□1FSG1-U10/32-23																		
AS13□1FSG1-M5-04	4			8.2			11.5	19.8										
AS13□1FSG1-U10/32-04																		
AS13□1FSG1-M5-06	6			10.4				20.9	20.4	36.6								8
AS13□1FSG1-U10/32-06																		

*1 Reference dimensions
*2 Reference dimensions of threads after installation

Inch Size

[mm]

Model	d	T	H	D1	D2	D3	L1	L2	L3	L4	L5*1		A*2		M	W1	Y	Weight [g]
											Unlocked	Locked	Unlocked	Locked				
AS13□1FSG1-M5-01	1/8	M5 x 0.8 10/32UNF	8	7.2	9.4	9.4	11.6	19.4	17.5	33.8	39	36.5	35	33.5	13.3	13.6	9.6	7
AS13□1FSG1-U10/32-01																		
AS13□1FSG1-M5-03	5/32			8.2				19.8										
AS13□1FSG1-U10/32-03																		
AS13□1FSG1-M5-07	1/4			11.2			11.5	20.9	20.4	36.6								8
AS13□1FSG1-U10/32-07																		

*1 Reference dimensions
*2 Reference dimensions of threads after installation

Dimensions: Elbow Type

Seal method: Sealant
For R, NPT thread

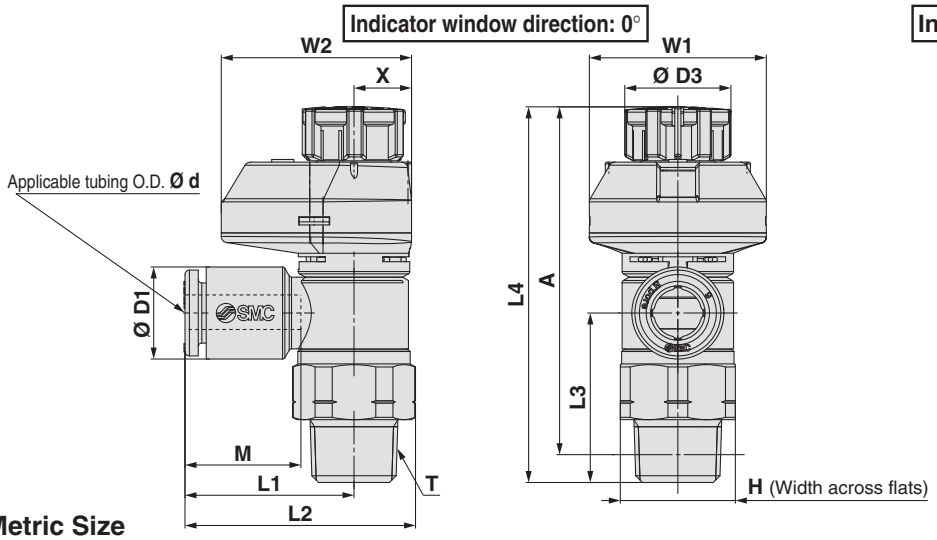

Metric Size

[mm]

Model	d	T (R, NPT)	H	D1	D3	L1	L2	L3	L4 Note 1) Unlocked	L4 Note 1) Locked	A Note 2) Unlocked	A Note 2) Locked	M	W1	W2	X	Y	Weight [g]
AS22□1FSG□-01-23 (S)	3.2	1/8	13 (12.7)	7.2	12	19.1	26.2	19.1	43.9	42.4	40.8	39.3	13.3	20	21.5	6.5	15	13 (13)
AS22□1FSG□-01-04 (S)	4			8.2														
AS22□1FSG□-01-06 (S)	6			10.4														14 (13)
AS22□1FSG□-01-08 (S)	8			13.2		22.4	29.5						14.2					15 (14)
AS22□1FSG□-01-10 (S)	10			15.9		25.3	32.4						15.6					16 (15)
AS22□1FSG□-02-23 (S)	3.2	1/4	17 (17.5)	7.2	13	20.9	30.2 (30.3)	22.6	49.7	48.3	44.2	42.8	13.3	21.5	24	7.8	16.2	23 (24)
AS22□1FSG□-02-04 (S)	4			8.2														
AS22□1FSG□-02-06 (S)	6			10.4		23.4	32.7 (32.8)											
AS22□1FSG□-02-08 (S)	8			13.2		23.9	33.2 (33.3)						14.2					24 (25)
AS22□1FSG□-02-10 (S)	10			15.9		26.9	36.2 (36.3)						15.6					25 (26)
AS32□1FSG□-02-06 (S)	6	1/4	19	10.4	16.6	21.8	32.1	36.4	63.1	61.7	57.9	56.5	13.3	24.5	28.5	9.3	19.2	47 (48)
AS32□1FSG□-02-08 (S)	8			13.2		22.7	33						14.2					
AS32□1FSG□-02-10 (S)	10			15.9		26.7	37	35.7					15.6					48 (49)
AS32□1FSG□-02-12 (S)	12			18.5		29.7	40	34.5					17					50 (51)
AS32□1FSG□-03-06 (S)	6	3/8	19	10.4	16.6	21.8	32.1	28.7	55.4	54	50.2	48.8	13.3	24.5	28.5	9.3	19.2	38 (39)
AS32□1FSG□-03-08 (S)	8			13.2		22.7	33						14.2					
AS32□1FSG□-03-10 (S)	10			15.9		26.7	37	28					15.6					39 (40)
AS32□1FSG□-03-12 (S)	12			18.5		29.7	40	26.8					17					41 (42)
AS42□1FSG□-04-10 (S)	10	1/2	24 (23.8)	15.9	18.8	27.4	40.3 (40.2)	36.2	64.1	62.5	57	55.4	15.6	26	29	10	19	62 (61)
AS42□1FSG□-04-12 (S)	12			18.5		30.8	43.7 (43.6)	35.1					17					64 (63)
AS42□1FSG□-04-16 (S)	16			23.8		34.8	47.7 (47.6)	32.7					20.6					68 (67)

Note 1) Reference dimensions Note 2) Reference dimensions of threads after installation Note 3) The values in ( ) are for NPT thread.

Inch Size

[mm]

Model	d	T (R, NPT)	H	D1	D3	L1	L2	L3	L4 Note 1) Unlocked	L4 Note 1) Locked	A Note 2) Unlocked	A Note 2) Locked	M	W1	W2	X	Y	Weight [g]
AS22□1FSG□-01-01 (S)	1/8"	1/8	13 (12.7)	7.2	12	19.1	26.2	19.1	43.9	42.4	40.8	39.3	13.3	20	21.5	6.5	15	13 (13)
AS22□1FSG□-01-03 (S)	5/32"			8.2														
AS22□1FSG□-01-07 (S)	1/4"			11.2		20.8	27.9											14 (13)
AS22□1FSG□-01-09 (S)	5/16"			13.2		22.4	29.5						14.2					15 (14)
AS22□1FSG□-02-01 (S)	1/8"	1/4	17 (17.5)	7.2	13	20.9	30.2 (30.3)	22.6	49.7	48.3	44.2	42.8	13.3	21.5	24	7.8	16.2	23 (24)
AS22□1FSG□-02-03 (S)	5/32"			8.2														
AS22□1FSG□-02-07 (S)	1/4"			11.2		23.4	32.7 (32.8)											24 (24)
AS22□1FSG□-02-09 (S)	5/16"			13.2		23.9	33.2 (33.3)						14.2					24 (25)
AS22□1FSG□-02-11 (S)	3/8"			15.5		26.4	35.7 (35.8)						15.6					25 (26)
AS32□1FSG□-02-07 (S)	1/4"	3/8	19	11.2	16.6	21.8	32.1	36.4	63.1	61.7	57.9	56.5	13.3	24.5	28.5	9.3	19.2	47 (48)
AS32□1FSG□-02-09 (S)	5/16"			13.2		22.7	33						14.2					
AS32□1FSG□-02-11 (S)	3/8"			15.5		26.7	37	35.9					15.6					48 (49)
AS32□1FSG□-03-07 (S)	1/4"	3/8	19	11.2	16.6	21.8	32.1	28.7	55.4	54	50.2	48.8	13.3	24.5	28.5	9.3	19.2	38 (39)
AS32□1FSG□-03-09 (S)	5/16"			13.2		22.7	33						14.2					
AS32□1FSG□-03-11 (S)	3/8"			15.5		26.7	37	28.2					15.6					39 (40)
AS42□1FSG□-04-11 (S)	3/8"	1/2	24 (23.8)	15.5	18.8	27.4	40.3 (40.2)	36.2	64.1	62.5	57	55.4	15.6	26	29	10	19	62 (61)
AS42□1FSG□-04-13 (S)	1/2"			19.3		30.9	43.8 (43.7)	34.7					17					64 (63)

Note 1) Reference dimensions Note 2) Reference dimensions of threads after installation Note 3) The values in ( ) are for NPT thread.

Dimensions: Universal Type

Seal method: Sealant
For R, NPT thread

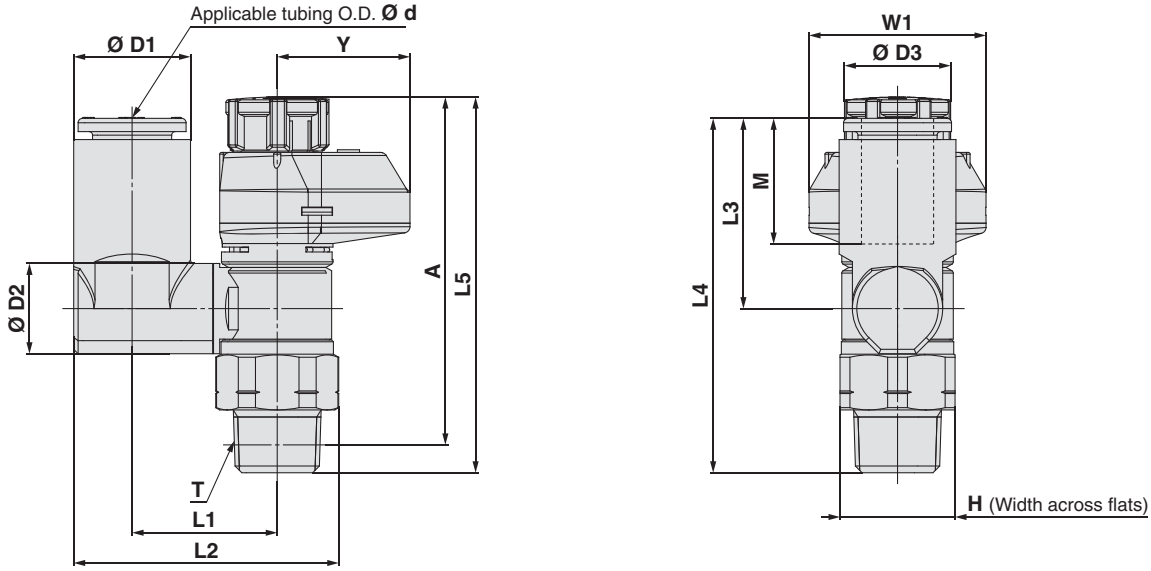

Metric Size

[mm]

Model	d	T	H	D1	D2	D3	L1	L2	L3	L4	L5		A		M	W1	Y	Weight [g]
											Unlocked	Locked	Unlocked	Locked				
AS23□1FSG1-01-23 (S)	3.2	1/8	13 (12.7)	7.2	9.6	12	13.3	24	17.5	36	43.9	42.4	40.8	39.3	13.3	21.5	16.2	14
AS23□1FSG1-01-04 (S)	4			8.2			13.9	25.1										
AS23□1FSG1-01-06 (S)	6			10.4				26.2	20.4	38.8								15
AS23□1FSG1-01-08 (S)	8			13.2	10.2		16.4	30.1	21.5	40					14.2			16
AS23□1FSG1-02-04 (S)	4	1/4	17 (17.5)	8.2	12.9	13	16.5	29.9	17.5	40.1	49.7	48.3	44.2	42.8	13.3	24.5	19.2	24
AS23□1FSG1-02-06 (S)	6			11.2			19	33.8	21.4	43.9					14.2			26
AS23□1FSG1-02-08 (S)	8			13.2				34.9	23.5	46					15.6			27
AS23□1FSG1-02-10 (S)	10			15.9			20.9	38.1	24.7	47.3					17			28
AS33□1FSG1-02-06 (S)	6	1/4	19	11.2	12.9	16.6	20.2	36	21.4	57.8	63.1	61.7	57.9	56.5	13.3	24.5	19.2	49
AS33□1FSG1-02-08 (S)	8			13.2				37.1	23.5	59.9					14.2			50
AS33□1FSG1-02-10 (S)	10			15.9	17.4		23	41.2	26.1	62.5					15.6			53
AS33□1FSG1-02-12 (S)	12			18.5				42.5	28.3	64.7					17			55
AS33□1FSG1-03-06 (S)	6	3/8	19	10.4	12.9	16.6	20.2	36	21.4	50.1	55.4	54	50.2	48.8	13.3	24.5	19.2	41
AS33□1FSG1-03-08 (S)	8			13.2				37.1	23.5	52.2					14.2			42
AS33□1FSG1-03-10 (S)	10			15.9	17.4		23	41.2	26.1	54.8					15.6			45
AS33□1FSG1-03-12 (S)	12			18.5				42.5	28.3	57					17			47
AS43□1FSG1-04-10 (S)	10	1/2	24 (23.8)	15.9	17.4	18.8	25.6	46.4	26.1	61.2	64.1	62.5	57	55.4	15.6	26	19	69
AS43□1FSG1-04-12 (S)	12			18.5	21		26.2	48.3	28.3	63.4					17			72

Inch Size

[mm]

Model	d	T	H	D1	D2	D3	L1	L2	L3	L4	L5		A		M	W1	Y	Weight [g]
											Unlocked	Locked	Unlocked	Locked				
AS23□1FSG1-01-01 (S)	1/8	1/8	13 (12.7)	7.2	9.6	12	13.3	24	17.5	36	43.9	42.4	40.8	39.3	13.3	21.5	16.2	14
AS23□1FSG1-01-03 (S)	5/32			8.2			13.9	25.1										
AS23□1FSG1-01-07 (S)	1/4			11.2	10.2		16.4	29.1	20.2	38.7								15
AS23□1FSG1-01-09 (S)	5/16			13.2				30.1	21.5	40					14.2			16
AS23□1FSG1-02-03 (S)	5/32	1/4	17 (17.5)	8.2	12.9	13	16.5	29.9	17.5	40.1	49.3	48.3	44.2	42.8	13.3	24.5	19.2	24
AS23□1FSG1-02-07 (S)	1/4			11.2			19	33.8	21.4	43.9								26
AS23□1FSG1-02-09 (S)	5/16			13.2				34.9	23.5	46					14.2			27
AS23□1FSG1-02-11 (S)	3/8			15.9			20.9	38.1	24.7	47.3					15.6			28
AS33□1FSG1-02-07 (S)	1/4	3/8	19	11.2	12.9	16.6	20.2	36	21.4	57.8	63.1	61.7	57.9	56.5	13.3	24.5	19.2	49
AS33□1FSG1-02-09 (S)	5/16			13.2				37.1	23.5	59.9					14.2			50
AS33□1FSG1-02-11 (S)	3/8			15.9	17.4		23	41.2	26.1	62.5					15.6			53
AS33□1FSG1-03-07 (S)	1/4	3/8	19	11.2	12.9	16.6	20.2	36	21.4	50.1	55.4	54	50.2	48.8	13.3	24.5	19.2	41
AS33□1FSG1-03-09 (S)	5/16			13.2				37.1	23.5	52.2					14.2			42
AS33□1FSG1-03-11 (S)	3/8			15.9	17.4		23	41.2	26.1	54.8					15.6			45
AS43□1FSG1-04-11 (S)	3/8	1/2	24 (23.8)	15.9	17.4	18.8	25.6	46.4	26.1	61.2	64.1	62.5	57	55.4	15.6	26	19	69
AS43□1FSG1-04-13 (S)	1/2			18.5	21		26.2	48.3	28.3	63.4					17			72

Dimensions: Elbow Type

Seal method: Face seal
For G thread

Indicator window direction: 0°

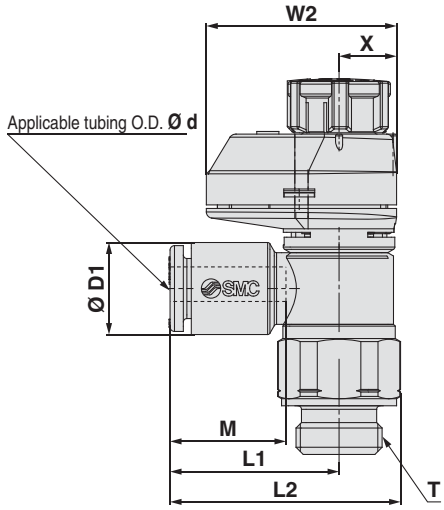

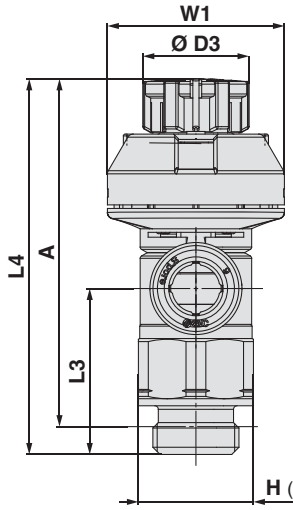

Indicator window direction: 180°

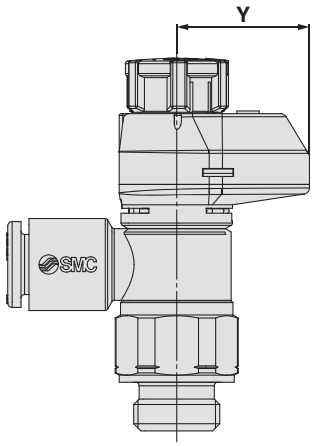

Metric Size

[mm]

Model	d	T	H	D1	D3	L1	L2	L3	L4 Note 1)		A Note 2)		M	W1	W2	X	Y	Weight [g]
									Unlocked	Locked	Unlocked	Locked						
AS22□1FSG□-G01-23	3.2	1/8	13	7.2	12	19.1	26.1	18.8	43.8	42.4	38.3	36.9	13.3	20	21.5	6.5	15	14
AS22□1FSG□-G01-04	4			8.2														
AS22□1FSG□-G01-06	6			10.4														
AS22□1FSG□-G01-08	8			13.2		22.4	29.4						14.2					15
AS22□1FSG□-G01-10	10			15.9		25.3	32.3						15.6					16
AS22□1FSG□-G02-23	3.2	1/4	17	7.2	13	20.9	30	22.6	49.7	48.3	43.2	41.8	13.3	21.5	24	7.8	16.2	26
AS22□1FSG□-G02-04	4			8.2														
AS22□1FSG□-G02-06	6			10.4		23.4	32.5											
AS22□1FSG□-G02-08	8			13.2		23.9	32.6						14.2					27
AS22□1FSG□-G02-10	10			15.9		26.9	36						15.6					28
AS32□1FSG□-G02-06	6	1/4	21	10.4	16.6	21.8	33	36.4	63.1	61.7	54.6	53.2	13.3	24.5	28.5	9.3	19.2	55
AS32□1FSG□-G02-08	8			13.2		22.7	33.9						14.2					
AS32□1FSG□-G02-10	10			15.9		26.7	37.9	35.7					15.6					57
AS32□1FSG□-G02-12	12			18.5		29.7	40.9	34.5					17					59
AS32□1FSG□-G03-06	6	3/8	21	10.4	16.6	21.8	33	28.7	55.4	54	47.9	46.5	13.3	24.5	28.5	9.3	19.2	45
AS32□1FSG□-G03-08	8			13.2		22.7	33.9						14.2					46
AS32□1FSG□-G03-10	10			15.9		26.7	37.9	28					15.6					47
AS32□1FSG□-G03-12	12			18.5		29.7	40.9	26.8					17					49
AS42□1FSG□-G04-10	10	1/2	27	15.9	18.8	27.4	41.8	36.2	64.1	62.5	55.1	53.5	15.6	26	29	10	19	80
AS42□1FSG□-G04-12	12			18.5		30.8	45.2	35.1					17					82
AS42□1FSG□-G04-16	16			23.8		34.8	49.2	32.7					20.6					86

Note 1) Reference dimensions
Note 2) Reference dimensions of threads after installation

Dimensions: Universal Type

Seal method: Face seal
For G thread

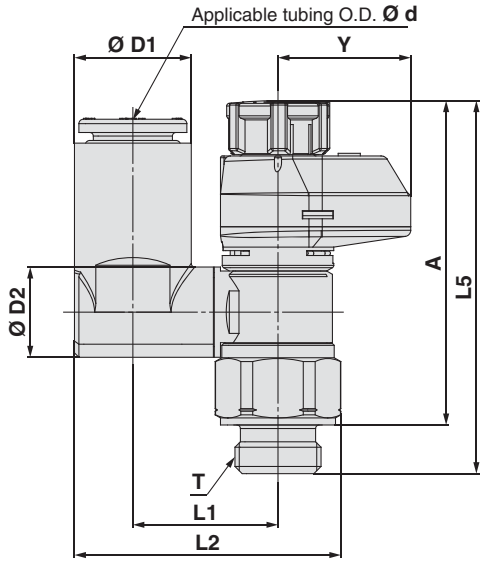

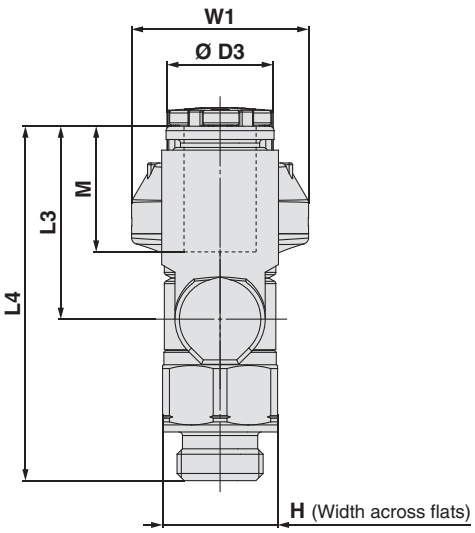

Metric Size

[mm]

Model	d	T	H	D1	D2	D3	L1	L2	L3	L4	L5		A		M	W1	Y	Weight [g]
											Unlocked	Locked	Unlocked	Locked				
AS23□1FSG1-G01-23	3.2	1/8	13	7.2	9.6	12	13.2	24	17.5	35.7	43.8	42.4	38.3	36.9	13.3	21.5	16.2	14
AS23□1FSG1-G01-04	4			8.2			13.9	25.1										15
AS23□1FSG1-G01-06	6			10.4				26.2	20.4	38.5								15
AS23□1FSG1-G01-08	8			13.2	10.2		16.4	30.1	21.5	39.7					14.2			16
AS23□1FSG1-G02-04	4	1/4	17	8.2	12.9	13	16.5	29.9	17.5	40.1	49.7	48.3	43.2	41.8	13.3	24.5	19.2	27
AS23□1FSG1-G02-06	6			10.4			19	33.8	21.4	43.9								29
AS23□1FSG1-G02-08	8			13.2				34.9	23.5	46					14.2			30
AS23□1FSG1-G02-10	10			15.9			20.9	38.1	24.7	47.3					15.6			31
AS33□1FSG1-G02-06	6	1/4	21	10.4	12.9	16.6	20.2	36.1	21.4	57.8	63.1	61.7	54.6	53.2	13.3	24.5	19.2	56
AS33□1FSG1-G02-08	8			13.2				38	23.5	59.9					14.2			57
AS33□1FSG1-G02-10	10			15.9	17.4		23	42.2	26.1	58					15.6			60
AS33□1FSG1-G02-12	12			18.5				43.5	28.3	59.9					17			63
AS33□1FSG1-G03-06	6	3/8	21	10.4	12.9	16.6	20.2	36.6	21.4	50.1	55.4	54	47.9	46.5	13.3	24.5	19.2	48
AS33□1FSG1-G03-08	8			13.2				38	23.5	52.2					14.2			49
AS33□1FSG1-G03-10	10			15.9	17.4		23	42.2	28.1	50.3					15.6			53
AS33□1FSG1-G03-12	12			18.5				43.5	28.3	52.2					17			54
AS43□1FSG1-G04-10	10	1/2	27	15.9	17.4	18.8	25.6	47.9	26.1	61.2	64.1	62.5	55.1	53.5	15.6	26	19	86
AS43□1FSG1-G04-12	12			18.5	21		26.2	49.8	28.3	63.4					17			90

AS-FSG Series
Made to Order

Please contact SMC for detailed dimensions, specifications and delivery.

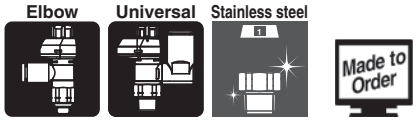

1 Lubricant: Vaseline -X12

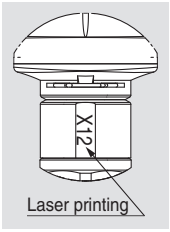

Example) AS2201FSG-01-04S-X12

2 Grease-free (Seal: Fluorine-coated) + Restrictor (Without check valve) -X21

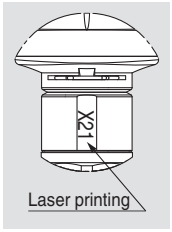

Example) AS2201FSG-01-04S-X21

Note 1) Not particle-free
Note 2) This product is a restrictor without a check valve (no control direction). Be aware that all part numbers are for a meter-out type; there is no part number for a meter-in type.
Note 3) Only the needle and O-ring are fluorine-coated.

3 Restrictor (Without check valve) -X214

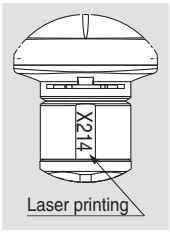

Example) AS2201FSG-01-04S-X214

Note) This product is a restrictor without a check valve (no control direction). Be aware that all part numbers are for a meter-out type; there is no part number for a meter-in type.

4 Clean Series 10-

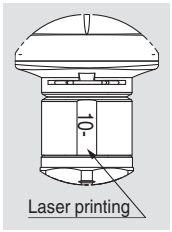

Example) 10-AS2201FSG-01-04S

Note 1) Fluorine grease is used.
Note 2) The particle generation class is 5.

Speed Controller with Indicator/ Elbow Type: Uni Thread Type

AS-FS Series

Elbow

Brass

New-stand male threads for piping that reduces the screw-in time by 1/3.

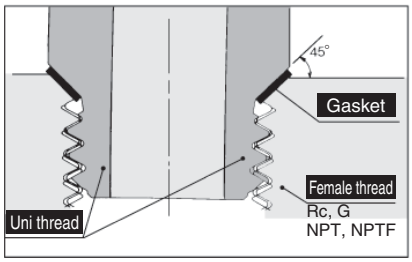

Shape of Uni thread ridge

Use of the chamfered surface of the female thread as the seat surface and adoption of gaskets made by laminating NBR on both surfaces of stainless steel plates achieve secure sealing regardless of the difference of diameters due to the female thread type, deviations due to the tolerance, or the size of the chamfered corner.
(Any standard chamfered female thread can be used.)

A ridge shape has been created as a Uni thread for common applications for Rc, G, NPT and NPTF.

The gasket seal method drastically cuts piping work-hours.

Flow Direction Symbols on Body

	Meter-out	Meter-in
Symbol	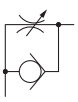	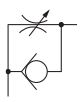

⚠ Caution

Be sure to read this before handling. Refer to the back cover for Safety Instructions. For Flow Control Equipment Precautions, refer to the "Handling Precautions for SMC Products" and "Operation Manual" on the SMC website, http://www.smc.eu

Model

Model / Elbow type	Uni thread size	Applicable tubing O.D.												
		Metric size							Inch size					
		3.2	4	6	8	10	12	16	1/8"	5/32"	1/4"	5/16"	3/8"	1/2"
AS22□1FS□-U01	1/8	●	●	●	●	●			●	●	●	●		
AS22□1FS□-U02	1/4	●	●	●	●	●			●	●	●	●	●	
AS32□1FS□-U02	1/4			●	●	●	●				●	●	●	
AS32□1FS□-U03	3/8			●	●	●	●				●	●	●	
AS42□1FS□-U04	1/2					●	●	●					●	●

Specifications

Fluid	Air
Proof pressure	1.5 MPa
Max. operating pressure	1 MPa
Min. operating pressure	0.1 MPa
Ambient and fluid temperature	–5 to 60°C (No freezing)
Applicable tubing material	Nylon, Soft nylon, Polyurethane Note)

Note) Use caution at the max. operating pressure when using soft nylon or polyurethane tubing.
(Refer to the **WEB catalogue**)

Flow Rate and Sonic Conductance

Model		AS22□1FS□-U01			AS22□1FS□-U02				AS32□1FS□			AS42□1FS□	
Tubing O.D.	Metric size	Ø 3.2	Ø 4	Ø 6 Ø 8 Ø 10	Ø 3.2	Ø 4	Ø 6	Ø 8 Ø 10	Ø 6	Ø 8	Ø 10 Ø 12	Ø 10	Ø 12 Ø 16
	Inch size	Ø 1/8"	Ø 5/32"	Ø 1/4" Ø 5/16"	Ø 1/8"	Ø 5/32"	—	Ø 1/4" Ø 5/16" Ø 3/8"	Ø 1/4"	Ø 5/16"	Ø 3/8"	Ø 3/8"	Ø 1/2"
C values: Sonic conductance [dm³/(s·bar)]	Free flow	0.4	0.6	0.6	0.7	1.0	1.3	1.5	1.6	1.7	2.5	4.4	4.8
	Controlled flow	0.4	0.7	0.8	0.6	0.9	1.3		2.1	2.4	3.3	4.4	4.9
b values: Critical pressure ratio	Free flow	0.2		0.3	0.3		0.4		0.4		0.3	0.3	
	Controlled flow	0.2		0.3	0.3				0.3			0.3	

Note) C and b values are for controlled flow with the needle fully open and free flow with the needle fully closed.

Elbow | Brass (Electroless nickel plated)

How to Order

AS 2 2 0 1F S □ – U01 – 06

Body size

2	1/8, 1/4
3	3/8
4	1/2

Type

2	Elbow

With indicator

Control type Note)

0	Meter-out
1	Meter-in

Note) Meter-out and meter-in types can be visually identified by colour of the knob.
Meter-out: Grey
Meter-in: Light blue

Indicator window direction

—	0°
1	180°

Note) Orientation of indicator direction is fixed when manufacturing, and cannot be changed by the user.

Applicable tubing O.D. Note 1)

Metric size

Tubing O.D.	
23	Ø 3.2 Note 2)
04	Ø 4
06	Ø 6
08	Ø 8
10	Ø 10
12	Ø 12
16	Ø 16

Inch size

Tubing O.D.	
01	Ø 1/8"
03	Ø 5/32"
07	Ø 1/4"
09	Ø 5/16"
11	Ø 3/8"
13	Ø 1/2"

Note 1) For selecting applicable tubing O.D., refer to the "Model" on page 28.
Metric size and inch size types can be visually identified by colour of the release button.
Metric size: Light grey
Inch size: Orange
Note 2) Use Ø 1/8" tubing.

Port size

U01	Uni 1/8
U02	Uni 1/4
U03	Uni 3/8
U04	Uni 1/2

Needle Valve/Flow Rate Characteristics

AS2201FS□-U01, AS2211FS□-U01

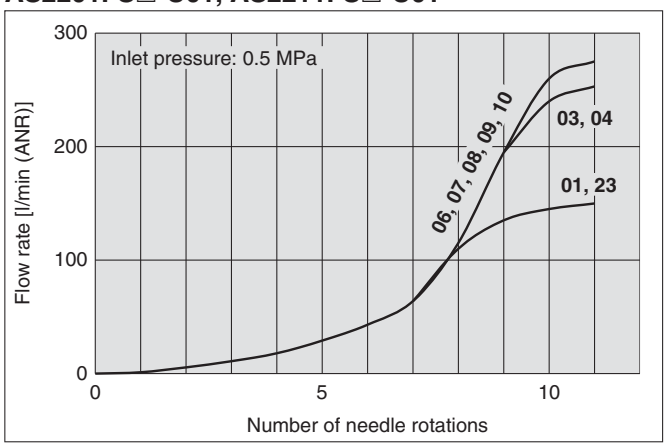

AS2201FS□-U02, AS2211FS□-U02

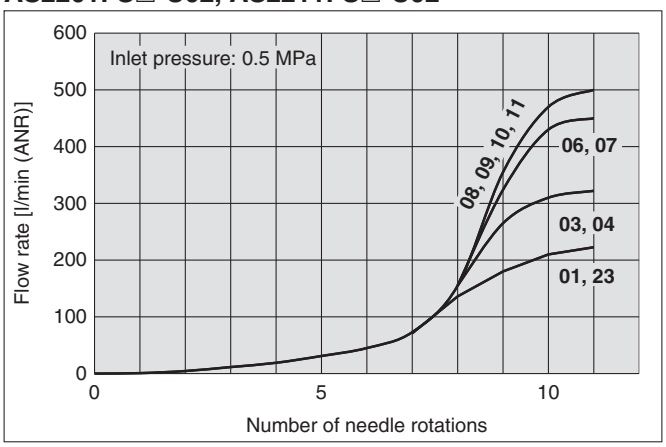

AS3201FS□, AS3211FS□

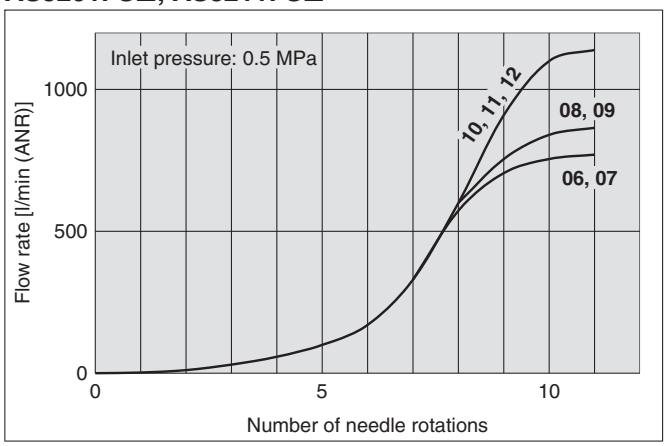

AS4201FS□, AS4211FS□

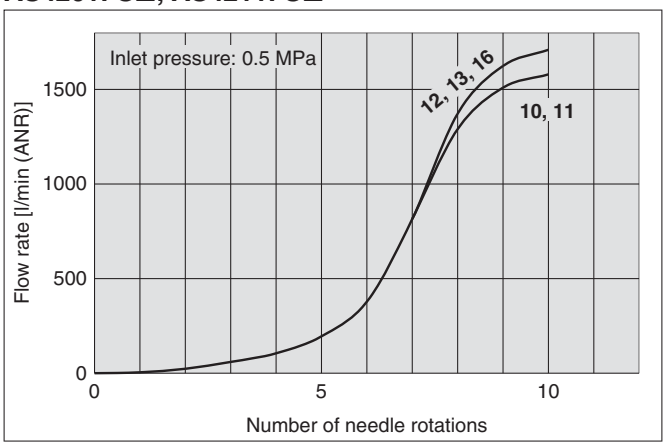

Note) The numbers above the flow rate characteristic curves in the charts show the applicable tubing outside diameter as defined by the product number.

Construction: Elbow Type

AS22□1FS□-U01-06A

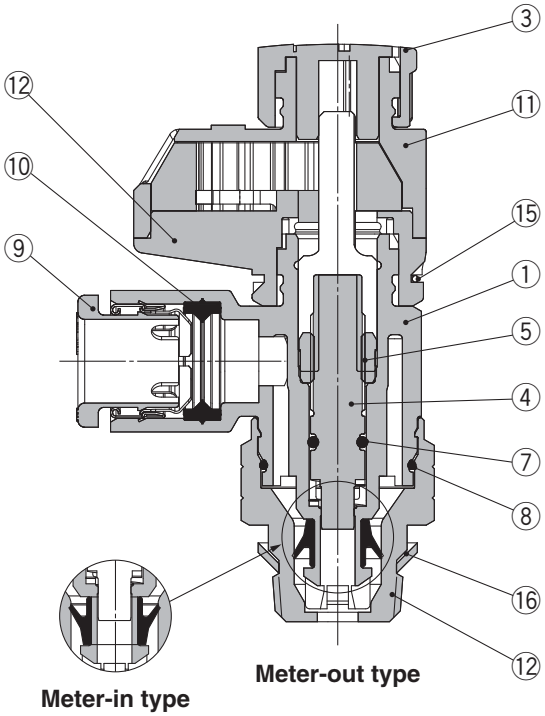

Component Parts

No.	Description	Material	Note
1	**Body A**	PBT	
2	**Body B**	Brass	Electroless nickel plating
3	**Knob**	POM	
4	**Needle**	PBT	
5	**Needle guide**	Brass	Electroless nickel plating
6	**U-seal**	HNBR	
7	**O-ring**	NBR	
8	**O-ring**	NBR	
9	**Cassette**	—	
10	**Seal**	NBR	
11	**Bonnet A**	POM	
12	**Bonnet B**	POM	
13	**Gear**	POM	
14	**Indicator gear**	POM	
15	**Clip**	Stainless steel	
16	**Gasket**	NBR/Stainless steel	

Dimensions: Elbow Type

Seal method: Gasket seal
For Uni thread

Indicator window direction: 0°

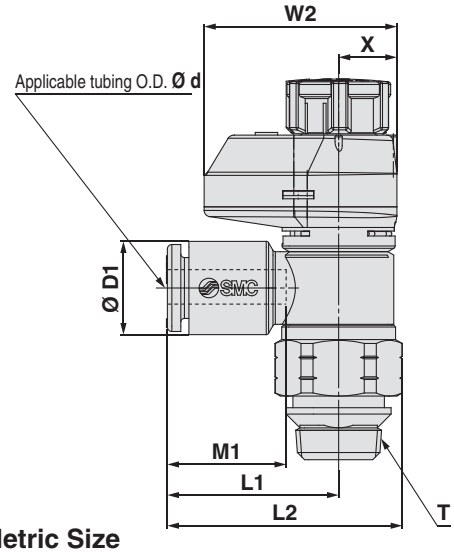

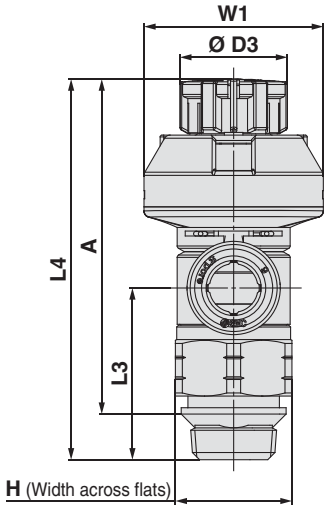

Indicator window direction: 180°

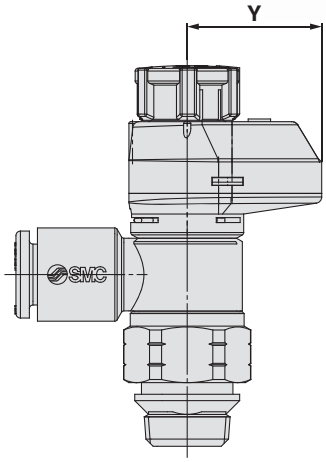

Metric Size

[mm]

Model	d	T	H	D1	D3	L1	L2	L3	L4 Note 1)		A Note 2)		M	W1	W2	X	Y	Weight [g]
									Unlocked	Locked	Unlocked	Locked						
AS22□1FS□-U01-23	3.2	1/8	13 (12.7)	7.2	12	19.1	26.1 (26)	19.1	43.9	42.4	40.8	39.3	13.3	20	21.5	6.5	15	13 (13)
AS22□1FS□-U01-04	4			8.2														
AS22□1FS□-U01-06	6			10.4														14 (13)
AS22□1FS□-U01-08	8			13.2		22.4	29.4 (29.3)						14.2					15 (14)
AS22□1FS□-U01-10	10			15.9		25.3	32.3 (32.2)						15.6					16 (15)
AS22□1FS□-U02-23	3.2	1/4	17 (17.5)	7.2	13	20.9	30 (30.3)	22.6	49.7	48.3	44.2	42.8	13.3	21.5	24	7.8	16.2	24 (25)
AS22□1FS□-U02-04	4			8.2														
AS22□1FS□-U02-06	6			10.4		23.4	32.5 (32.8)											
AS22□1FS□-U02-08	8			13.2		23.9	33 (33.3)						14.2					25 (26)
AS22□1FS□-U02-10	10			15.9		26.9	36 (36.3)						15.6					26 (27)
AS32□1FS□-U02-06	6	1/4	19	10.4	16.6	21.8	32.1	36.4	63.1	61.7	57.9	56.5	13.3	24.5	28.5	9.3	19.2	47 (48)
AS32□1FS□-U02-08	8			13.2		22.7	33						14.2					
AS32□1FS□-U02-10	10			15.9		26.7	37	35.7					15.6					48 (49)
AS32□1FS□-U02-12	12			18.5		29.7	40	34.5					17					50 (51)
AS32□1FS□-U03-06	6	3/8	19	10.4	16.6	21.8	32.1	28.7	55.4	54	50.2	48.8	13.3	24.5	28.5	9.3	19.2	36 (37)
AS32□1FS□-U03-08	8			13.2		22.7	33	28					14.2					
AS32□1FS□-U03-10	10			15.9		26.7	37						15.6					39 (40)
AS32□1FS□-U03-12	12			18.5		29.7	40	26.8					17					41 (42)
AS42□1FS□-U04-10	10	1/2	24 (23.8)	15.9	18.8	27.4	40.3 (40.2)	36.2	64.1	62.5	57	55.4	15.6	26	29	10	19	60 (59)
AS42□1FS□-U04-12	12			18.5		30.8	43.7 (43.6)	35.1					17					62 (61)
AS42□1FS□-U04-16	16			23.8		34.8	47.7 (47.6)	32.7					20.6					66 (65)

Note 1) Reference dimensions Note 2) Reference dimensions of threads after installation Note 3) The values in ( ) are for NPT thread.

Inch Size

[mm]

Model	d	T	H	D1	D3	L1	L2	L3	L4 Note 1)		A Note 2)		M	W1	W2	X	Y	Weight [g]
									Unlocked	Locked	Unlocked	Locked						
AS22□1FS□-U01-01	1/8"	1/8	13 (12.7)	7.2	12	19.1	26.1 (26)	19.1	43.9	42.4	40.8	39.3	13.3	20	21.5	6.5	15	13 (13)
AS22□1FS□-U01-03	5/32"			8.2														
AS22□1FS□-U01-07	1/4"			11.2		20.8	27.8 (27.7)											14 (13)
AS22□1FS□-U01-09	5/16"			13.2		22.4	29.4 (29.3)						14.2					15 (14)
AS22□1FS□-U02-01	1/8"	1/4	17 (17.5)	7.2	13	20.9	30 (30.3)	22.6	49.7	48.3	44.2	42.8	13.3	21.5	24	7.8	16.2	23 (24)
AS22□1FS□-U02-03	5/32"			8.2														
AS22□1FS□-U02-07	1/4"			11.2		23.4	32.5 (32.8)											24 (24)
AS22□1FS□-U02-09	5/16"			13.2		23.9	33 (33.3)						14.2					24 (25)
AS22□1FS□-U02-11	3/8"			15.5		26.4	35.5 (35.8)						15.6					25 (26)
AS32□1FS□-U02-07	1/4"	3/8	19	11.2	16.6	21.8	32.1	36.4	63.1	61.7	57.9	56.5	13.3	24.5	28.5	9.3	19.2	47 (48)
AS32□1FS□-U02-09	5/16"			13.2		22.7	33						14.2					
AS32□1FS□-U02-11	3/8"			15.5		26.7	37	35.9					15.6					48 (49)
AS32□1FS□-U03-07	1/4"	3/8	19	11.2	16.6	21.8	32.1	28.7	55.4	54	50.2	48.8	13.3	24.5	28.5	9.3	19.2	36 (37)
AS32□1FS□-U03-09	5/16"			13.2		22.7	33						14.2					
AS32□1FS□-U03-11	3/8"			15.5		26.7	37	28.2					15.6					37 (38)
AS42□1FS□-U04-11	3/8"	1/2	24 (23.8)	15.5	18.8	27.4	40.3 (40.2)	36.2	64.1	62.5	57	55.4	15.6	26	29	10	19	60 (59)
AS42□1FS□-U04-13	1/2"			19.3		30.9	43.8 (43.7)	34.7					17					62 (61)

Note 1) Reference dimensions Note 2) Reference dimensions of threads after installation Note 3) The values in ( ) are for NPT thread.

AS-FS Series
Specific Product Precautions 1

Be sure to read this before handling. Refer to the back cover for Safety Instructions. For Flow Control Equipment Precautions, refer to the "Handling Precautions for SMC Products" and "Operation Manual" on the SMC website, http://www.smc.eu

Design and Selection

⚠ Warning

1. Check the specifications.

The products in this catalogue are designed to be used in compressed air systems (including vacuum) only.
If the products are used in an environment where pressure or temperature is out of the specified range, damage and/or malfunction may result. Do not use under such conditions. (Refer to the specifications.)
Please contact SMC when using a fluid other than compressed air (including vacuum).
We do not guarantee against any damage if the product is used outside of the specification range.

2. The products in this catalogue are not designed for the use as stop valve with zero air leakage.

A certain amount of leakage is allowed in the product's specifications.
Tightening the needle to reduce leakage to zero may result in equipment damage.

3. Do not disassemble the product or make any modifications, including additional machining.

It may cause human injury and/or an accident.

4. The flow rate characteristics for each product are representative values.

The flow rate characteristics are characteristics of each individual product. Actual values may differ depending on the piping, circuitry, pressure conditions, etc.

5. Sonic conductance (C) and critical pressure ratio (b) values for products are representative values.
The speed controller's controlled flow values are with the needle fully open and free flow with the needle fully closed.

6. Check if PTFE can be used in application.

PTFE powder (Polytetrafluoroethylene resin) is included in the seal material for piping taper thread of male thread type. Confirm that the use of it will not cause any adverse effect on the system.
Please contact SMC if the Safety Data Sheet (SDS) is required.

Mounting

⚠ Warning

1. Operation Manual

Install the products and operate them only after reading the Operation Manual carefully and understanding its contents. Also, keep the Operation Manual where it can be referred to as necessary.

2. Ensure sufficient space for maintenance activities.

When installing the products, allow access for maintenance.

3. Tighten threads with the proper tightening torque.

When installing the products, follow the listed proper torque.

Mounting

⚠ Warning

4. After pushing the knob down to lock, confirm that it is locked.

It should not be possible to rotate the knob to the right or to the left.
If the knob is pulled with force, it may break. Do not pull the knob with excessive force.

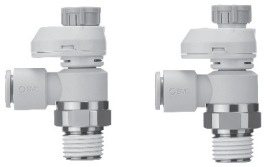

Locked **Unlocked**

5. Check the degree of rotation of the needle valve.

The products in this catalogue are retainer type so that the needle is not removed completely. Over rotation will cause damage.

6. Do not use tools such as pliers to rotate the knob.

It can cause idle rotation of the knob or damage.

7. Verify the air flow direction.

Mounting backward is dangerous, because the speed adjustment needle will not work and the actuator may lurch suddenly.

8. Adjust the speed by opening the needle slowly from the fully closed state.

Loose needle valves may cause unexpected sudden actuator lurching.
When a needle valve is turned clockwise, it is closed and actuator speed decreases. When a needle valve is turned counterclockwise, it is open and actuator speed increases.

9. Do not apply excessive force or shock to the body or fittings with an impact tool.

It can cause damage or air leakage.

10. Refer to the One-touch Fittings catalogue for more details about their piping and mounting precautions.

11. To install/remove the product, use an appropriate wrench to tighten/loosen at the supplied nut on body B.

Do not apply torque at other points as the product may be damaged. Rotate body A manually for positioning after installation.

12. Do not use body A and/or elbow body for applications involving continuous rotation.

Body A and the fitting section may be damaged.

Universal

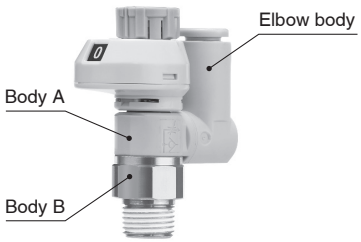

AS-FS Series
Specific Product Precautions 2

Be sure to read this before handling. Refer to the back cover for Safety Instructions. For Flow Control Equipment Precautions, refer to the "Handling Precautions for SMC Products" and "Operation Manual" on the SMC website, http://www.smc.eu

Mounting

⚠Caution

For M5, 10-32UNF

Tightening method

First, tighten it by hand, then give it an additional 1/6 turn to 1/4 turn with a wrench. A reference value for the tightening torque is 1 to 1.5 N·m.

Note) Excessive tightening may damage the thread portion or deform the gasket and cause air leakage.
If the screw is too shallowly screwed in, it may come loose or air may leak.

Chamfered area for female thread

1. Conforming to ISO 16030 (air pressure fluid dynamics – connection – ports and stud ends), the chamfered dimensions shown in the table below are recommended.

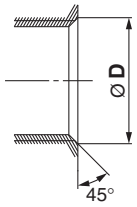

Female thread size	Chamfered dimension Ø **D** (Recommended value)
M5	5.1 to 5.4
10-32UNF	5.0 to 5.3

For R, NPT Thread (With sealant)

Tightening method

1. The proper tightening torques of the fittings are as shown in the table below. As a guide, tighten it by hand, then turn it two or three turns with a wrench. Check the dimensions of each product for the hexagon width across flats.

Connection thread size	Proper tightening torque [N·m]
NPT, R1/8	3 to 5
NPT, R1/4	8 to 12
NPT, R3/8	15 to 20
NPT, R1/2	20 to 25

Chamfered area for female thread

By chamfering as shown in the table below, machining of threads is easier and effective for burr prevention.

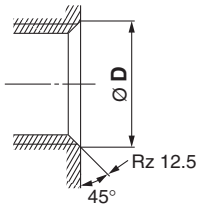

Connection thread size	Chamfered dimension Ø **D** (Recommended value)	
	Rc	NPT, NPTF
1/8	10.2 to 10.4	10.5 to 10.7
1/4	13.6 to 13.8	14.1 to 14.3
3/8	17.1 to 17.3	17.4 to 17.6
1/2	21.4 to 21.6	21.7 to 21.9

∗ For Uni thread, Rz 12.5 is necessary for sealing at the chamfered part.

For G Thread (Face seal type)

Tightening method

First, tighten the threaded portion by hand, then use a proper wrench, which could be suitable for the width across flats of the hexagon body, to tighten it further at a wrench tightening angle shown in the table below. For a tightening torque guide, refer to the table below. Check the dimensions of each product for the hexagon width across flats.

Connection thread size	Wrench tightening angle after hand-tightening [deg]	Proper tightening torque [N·m]
G1/8	10 to 20	3 to 4
G1/4	15 to 35	4 to 5
G3/8	15 to 35	8 to 9
G1/2	15 to 35	14 to 15

⚠Caution

For G Thread (Face seal type)

Chamfered area for female thread (Recommended value)

1. Conforming to ISO 16030-2001, the chamfered dimensions shown in the table below are recommended. By chamfering as shown in the table below, machining of threads is easier and effective for burr prevention.

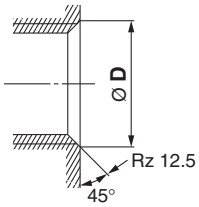

Nominal thread size	Chamfered dimension Ø **D**	
	Min.	Max.
1/8	9.8	10.2
1/4	13.3	13.7
3/8	16.8	17.2
1/2	21.0	21.4

2. Use G external threads with G internal threads.

For Uni Thread

Tightening method

1. First, tighten the threaded portion by hand, then use a proper wrench, which could be suitable for the width across flats of the hexagon body, to tighten it further at a wrench tightening angle shown in the table below. For a tightening torque guide, refer to the table below.

Connection Female Thread: Rc, NPT, NPTF

Uni thread size	Wrench tightening angle after hand-tightening [deg]	Tightening torque [N·m]
1/8	30 to 60	3 to 5
1/4	30 to 60	8 to 12
3/8	15 to 45	14 to 16
1/2	15 to 30	20 to 22

Connection Female Thread: G

Uni thread size	Wrench tightening angle after hand-tightening [deg]	Tightening torque [N·m]
1/8	30 to 45	3 to 4
1/4	15 to 30	4 to 5
3/8	15 to 30	8 to 9
1/2	15 to 30	14 to 15

2. The gasket can be reused up to 6 to 10 times.

Chamfered area for female thread

By chamfering as shown in the table below, machining of threads is easier and effective for burr prevention.

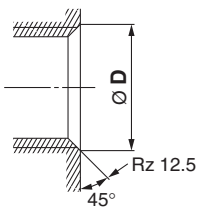

Connection thread size	Chamfered dimension Ø **D** (Recommended value)		
	G	Rc	NPT, NPTF
1/8	10.2 to 10.6	10.2 to 10.4	10.5 to 10.7
1/4	13.6 to 14.0	13.6 to 13.8	14.1 to 14.3
3/8	17.1 to 17.5	17.1 to 17.3	17.4 to 17.6
1/2	21.4 to 21.8	21.4 to 21.6	21.7 to 21.9

∗ For Uni thread, Rz 12.5 is necessary for sealing at the chamfered part.

AS-FS Series
Specific Product Precautions 3

Be sure to read this before handling. Refer to the back cover for Safety Instructions. For Flow Control Equipment Precautions, refer to the "Handling Precautions for SMC Products" and "Operation Manual" on the SMC website, http://www.smc.eu

Mounting

⚠Caution

1. This product has a stopper for fully close in rotating direction. Excess torque may break the stopper. Table below shows the maximum allowable torque of the knob.

Body size	Maximum allowable torque [N·m]
M5	0.05
1/8	0.07
1/4	0.16
3/8	0.2
1/2	0.4

When performing the piping work, turn the tightening tool in the horizontal direction to the hexagon across flats of the body B so that any moment is not applied to the body A. If the tool is in contact with the body A, this may cause the body B to come off.

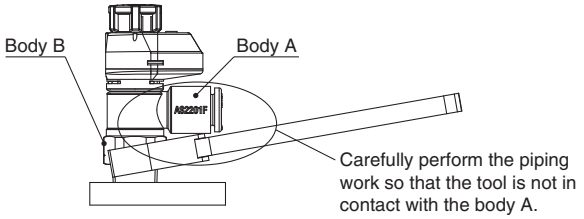

2. Actuator speed needs to be checked each time the setting is changed.

Individual product difference due to tolerance of the components, individual actuator difference, operating conditions and temperature, etc. may cause a large variation in the actuator speed, and for this reason, the final actuator speed needs to be checked every time the setting is changed.

3. Force for lifting the knob is specified as shown in the table below.

Larger lifting force than specified in the table below will cause removal of the knob, flow rate not according to the flow rate characteristics curve, incorrect flow indication with the indicator or damage to the product.

Port size	Knob lifting force
M5 10-32/UNF	1 to 1.5 N
1/8, 1/4, 3/8, 1/2	3.5 to 4 N

4. Do not rotate the product by the indicator part.

Use a wrench for mounting the product.
Otherwise, it may cause damage to the product.

Piping Threads with Sealant

⚠Caution

1. If the fitting is tightened with excessive torque, a large amount of sealant will seep out. Remove the excess sealant.

2. Insufficient tightening may loosen the threads, or cause air leakage.

3. Reuse

1) Normally, fittings with a sealant can be reused 2 to 3 times.
2) To prevent air leakage through the sealant, remove any loose sealant stuck to the fitting by blowing air over the threaded portion.
3) If the sealant no longer provides effective sealing, wind sealing tape over the sealant before reusing. Do not use the sealant in any form other than a tape type.

4. Once the fitting has been tightened, backing it out to its original position often causes the sealant to become defective. Air leakage will occur.

5. Use R external threads with Rc internal threads and NPT external threads with NPT internal threads.

Piping

⚠Caution

1. Refer to the One-touch Fittings catalogue for more details about their piping and mounting precautions.

2. Preparation before piping

Before piping is connected, it should be thoroughly blown out with air (flushing) or washed to remove chips, cutting oil and other debris from inside the pipe.

3. Winding of sealant tape

When screwing together pipes and fittings, etc., be certain that chips from the pipe threads and sealing material do not get inside the pipe. Also, when the sealant tape is used, leave ap-

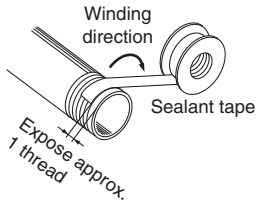

⚠ Safety Instructions

These safety instructions are intended to prevent hazardous situations and/or equipment damage. These instructions indicate the level of potential hazard with the labels of **"Caution," "Warning"** or **"Danger."** They are all important notes for safety and must be followed in addition to International Standards (ISO/IEC)*1), and other safety regulations.

⚠ Caution: **Caution** indicates a hazard with a low level of risk which, if not avoided, could result in minor or moderate injury.

⚠ Warning: **Warning** indicates a hazard with a medium level of risk which, if not avoided, could result in death or serious injury.

⚠ Danger : **Danger** indicates a hazard with a high level of risk which, if not avoided, will result in death or serious injury.

*1) ISO 4414: Pneumatic fluid power – General rules relating to systems.
ISO 4413: Hydraulic fluid power – General rules relating to systems.
IEC 60204-1: Safety of machinery – Electrical equipment of machines. (Part 1: General requirements)
ISO 10218-1: Manipulating industrial robots - Safety.
etc.

⚠ Warning

1. The compatibility of the product is the responsibility of the person who designs the equipment or decides its specifications.
Since the product specified here is used under various operating conditions, its compatibility with specific equipment must be decided by the person who designs the equipment or decides its specifications based on necessary analysis and test results. The expected performance and safety assurance of the equipment will be the responsibility of the person who has determined its compatibility with the product. This person should also continuously review all specifications of the product referring to its latest catalogue information, with a view to giving due consideration to any possibility of equipment failure when configuring the equipment.

2. Only personnel with appropriate training should operate machinery and equipment.
The product specified here may become unsafe if handled incorrectly. The assembly, operation and maintenance of machines or equipment including our products must be performed by an operator who is appropriately trained and experienced.

3. Do not service or attempt to remove product and machinery/equipment until safety is confirmed.
1. The inspection and maintenance of machinery/equipment should only be performed after measures to prevent falling or runaway of the driven objects have been confirmed.
2. When the product is to be removed, confirm that the safety measures as mentioned above are implemented and the power from any appropriate source is cut, and read and understand the specific product precautions of all relevant products carefully.
3. Before machinery/equipment is restarted, take measures to prevent unexpected operation and malfunction.

4. Contact SMC beforehand and take special consideration of safety measures if the product is to be used in any of the following conditions.
1. Conditions and environments outside of the given specifications, or use outdoors or in a place exposed to direct sunlight.
2. Installation on equipment in conjunction with atomic energy, railways, air navigation, space, shipping, vehicles, military, medical treatment, combustion and recreation, or equipment in contact with food and beverages, emergency stop circuits, clutch and brake circuits in press applications, safety equipment or other applications unsuitable for the standard specifications described in the product catalogue.
3. An application which could have negative effects on people, property, or animals requiring special safety analysis.
4. Use in an interlock circuit, which requires the provision of double interlock for possible failure by using a mechanical protective function, and periodical checks to confirm proper operation.

⚠ Caution

1. The product is provided for use in manufacturing industries.
The product herein described is basically provided for peaceful use in manufacturing industries.
If considering using the product in other industries, consult SMC beforehand and exchange specifications or a contract if necessary.
If anything is unclear, contact your nearest sales branch.

Limited warranty and Disclaimer/ Compliance Requirements

The product used is subject to the following "Limited warranty and Disclaimer" and "Compliance Requirements". Read and accept them before using the product.

Limited warranty and Disclaimer

1. The warranty period of the product is 1 year in service or 1.5 years after the product is delivered, wichever is first.*2) Also, the product may have specified durability, running distance or replacement parts. Please consult your nearest sales branch.
2. For any failure or damage reported within the warranty period which is clearly our responsibility, a replacement product or necessary parts will be provided. This limited warranty applies only to our product independently, and not to any other damage incurred due to the failure of the product.
3. Prior to using SMC products, please read and understand the warranty terms and disclaimers noted in the specified catalogue for the particular products.

*2) **Vacuum pads are excluded from this 1 year warranty.** A vacuum pad is a consumable part, so it is warranted for a year after it is delivered. Also, even within the warranty period, the wear of a product due to the use of the vacuum pad or failure due to the deterioration of rubber material are not covered by the limited warranty.

Compliance Requirements

1. The use of SMC products with production equipment for the manufacture of weapons of mass destruction (WMD) or any other weapon is strictly prohibited.
2. The exports of SMC products or technology from one country to another are governed by the relevant security laws and regulations of the countries involved in the transaction. Prior to the shipment of a SMC product to another country, assure that all local rules governing that export are known and followed.

⚠ Caution

SMC products are not intended for use as instruments for legal metrology.
Measurement instruments that SMC manufactures or sells have not been qualified by type approval tests relevant to the metrology (measurement) laws of each country. Therefore, SMC products cannot be used for business or certification ordained by the metrology (measurement) laws of each country.

⚠ Safety Instructions | Be sure to read "Handling Precautions for SMC Products" (M-E03-3) before using.

SMC Corporation (Europe)

Austria	☎+43 (0)2262622800	www.smc.at	office@smc.at
Belgium	☎+32 (0)33551464	www.smcpneumatics.be	info@smcpneumatics.be
Bulgaria	☎+359 (0)2807670	www.smc.bg	office@smc.bg
Croatia	☎+385 (0)13707288	www.smc.hr	office@smc.hr
Czech Republic	☎+420 541424611	www.smc.cz	office@smc.cz
Denmark	☎+45 70252900	www.smcdk.com	smc@smcdk.com
Estonia	☎+372 6510370	www.smcpneumatics.ee	smc@smcpneumatics.ee
Finland	☎+358 207513513	www.smc.fi	smcfi@smc.fi
France	☎+33 (0)164761000	www.smc-france.fr	info@smc-france.fr
Germany	☎+49 (0)61034020	www.smc.de	info@smc.de
Greece	☎+30 210 2717265	www.smchellas.gr	sales@smchellas.gr
Hungary	☎+36 23513000	www.smc.hu	office@smc.hu
Ireland	☎+353 (0)14039000	www.smcpneumatics.ie	sales@smcpneumatics.ie
Italy	☎+39 0292711	www.smcitalia.it	mailbox@smcitalia.it
Latvia	☎+371 67817700	www.smclv.lv	info@smclv.lv
Lithuania	☎+370 5 2308118	www.smclt.lt	info@smclt.lt
Netherlands	☎+31 (0)205318888	www.smcpneumatics.nl	info@smcpneumatics.nl
Norway	☎+47 67129020	www.smc-norge.no	post@smc-norge.no
Poland	☎+48 222119600	www.smc.pl	office@smc.pl
Portugal	☎+351 226166570	www.smc.eu	postpt@smc.smces.es
Romania	☎+40 213205111	www.smcromania.ro	smcromania@smcromania.ro
Russia	☎+7 8127185445	www.smc-pneumatik.ru	info@smc-pneumatik.ru
Slovakia	☎+421 (0)413213212	www.smc.sk	office@smc.sk
Slovenia	☎+386 (0)73885412	www.smc.si	office@smc.si
Spain	☎+34 902184100	www.smc.eu	post@smc.smces.es
Sweden	☎+46 (0)86031200	www.smc.nu	post@smc.nu
Switzerland	☎+41 (0)523963131	www.smc.ch	info@smc.ch
Turkey	☎+90 212 489 0 440	www.smcpnomatik.com.tr	info@smcpnomatik.com.tr
UK	☎+44 (0)845 121 5122	www.smcpneumatics.co.uk	sales@smcpneumatics.co.uk

SMC CORPORATION Akihabara UDX 15F, 4-14-1, Sotokanda, Chiyoda-ku, Tokyo 101-0021, JAPAN Phone: 03-5207-8249 FAX: 03-5298-5362

1st printing WP printing WP 00 Printed in Spain

Specifications are subject to change without prior notice and any obligation on the part of the manufacturer.