Speed Controller with Compact Indicator

RoHS

Height Max. 5.4 mm shorter

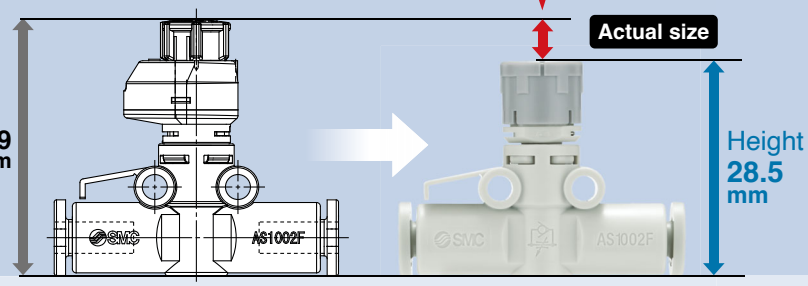

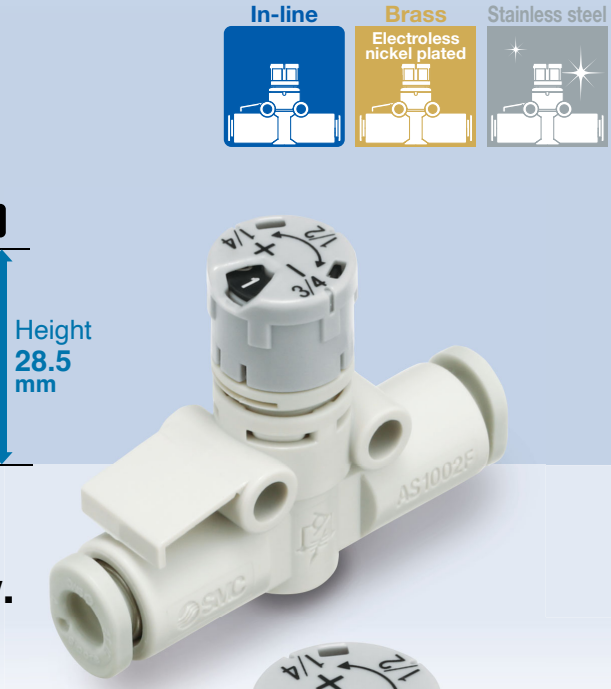

Flow rate can be controlled numerically with the indicator window.

- Due to the vernier indication, it is possible to configure fine settings in 1/4 increments.
  - · 32 divisions (body size 100)
  - · 40 divisions (body size 200)
- Reduces work-hours and setting mistakes

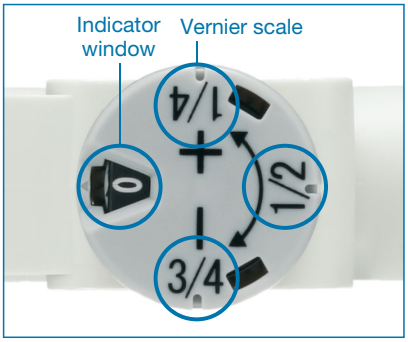

Indicator window	Vernier scale
0	1/4
	1/2
	3/4
⋮	⋮
10*1	1/4
	1/2
	3/4

*1 Body size 100 makes 8 rotations.

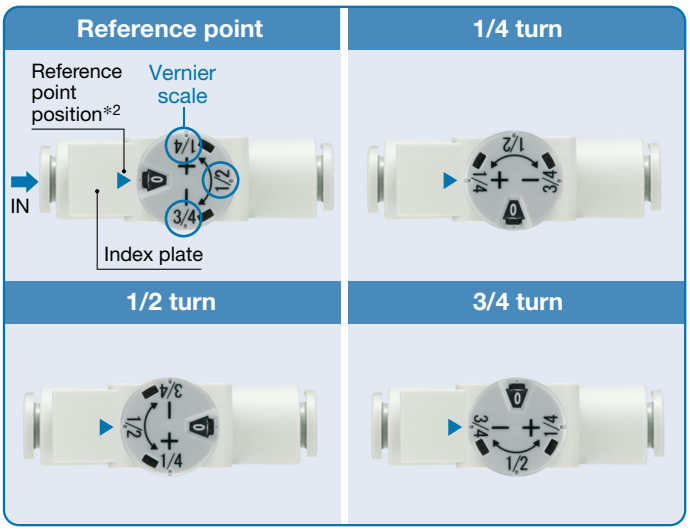

*2 For AS2002FS size (The number of reference points differs depending on the size. For details, refer to the operation manual.)

New A type with a panel mount adapter has been added. p. 4

No tools required, Reduced installation work

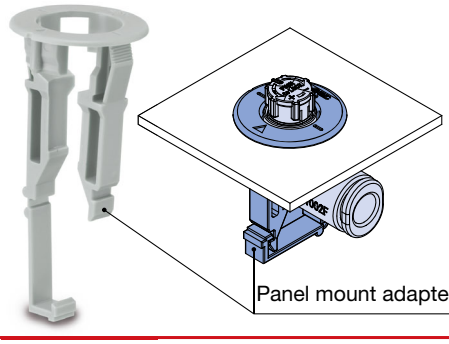

AS-FSA Series

SMC

CAT.EUS20-281B-UK

Series Variations

Model	Applicable tubing O.D.												Max. number of rotations
	Metric size						Inch size						
	3.2	4	6	8	10	12	1/8"	5/32"	1/4"	5/16"	3/8"	1/2"	
AS1002FS□A	●	●	●				●	●	●				8
AS2002FS□A		●	●					●	●				10
AS2052FS□A			●	●					●	●			
AS3002FS□A			●	●	●	●			●	●	●		
AS4002FS□A					●	●					●	●	

Easy Identification of Product Type

By index plate

It is possible to **identify the product when multiple controllers are mounted** and **identify the flow direction** by attaching an identification label.

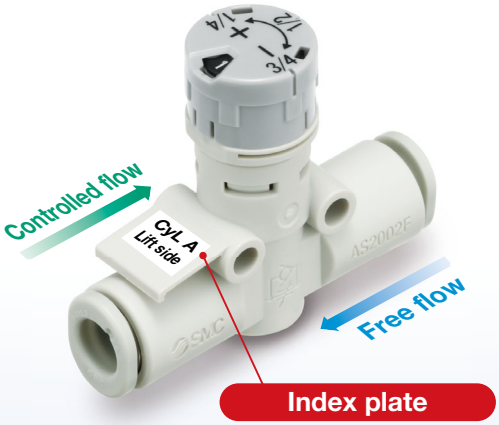

(Example with identification label attached)

By colour

Model	Release button colour	
	Metric	Inch
p. 2 AS-FSA Series	Light grey 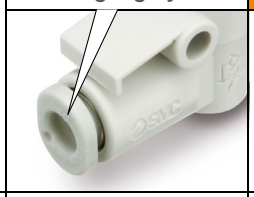	Orange 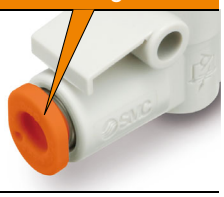
p. 8 AS-FSGA Series	White 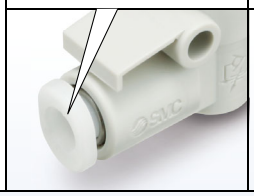	White 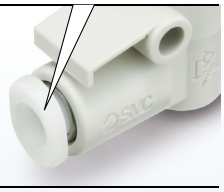

CONTENTS

Speed Controller with Compact Indicator
In-line Type
AS-FSA Series

In-line | Brass (Electroless nickel plated)

Model, Specifications, Flow Rate and Sonic Conductance, How to Order, Made to Order ..... p. 2
Options ..... p. 3
Needle Valve: Flow Rate Characteristics ..... p. 4
Dimensions ..... p. 5

Speed Controller with Compact Indicator
Stainless Steel Series In-line Type
AS-FSGA Series

In-line | Stainless steel

Model, Specifications, Flow Rate and Sonic Conductance, How to Order, Made to Order ..... p. 8
Options ..... p. 9
Needle Valve: Flow Rate Characteristics ..... p. 10
Dimensions ..... p. 11

Holder for Speed Controller TMH Series ..... p. 13

Speed Controller with Compact Indicator
In-line Type
AS-FSA Series

RoHS

In-line | Brass Electroless nickel plated

Model

Model	Applicable tubing O.D.											
	Metric size						Inch size					
	3.2	4	6	8	10	12	1/8"	5/32"	1/4"	5/16"	3/8"	1/2"
AS1002FS-□A	●	●	●				●	●	●			
AS2002FS-□A		●	●					●	●			
AS2052FS-□A			●	●					●	●		
AS3002FS-□A			●	●	●	●			●	●	●	
AS4002FS-□A					●	●					●	●

Specifications

Fluid	Air
Proof pressure	1.5 MPa
Max. operating pressure	1 MPa
Min. operating pressure	0.1 MPa
Ambient and fluid temperatures	–5 to 60 °C (No freezing)
Applicable tubing material	Nylon, Soft nylon, Polyurethane*1, FEP, PFA

*1 Use caution at the max. operating pressure when using soft nylon or polyurethane tubing. (Refer to the **web catalogue on www.smc.eu** for details.)

Flow Rate and Sonic Conductance

Model		AS1002FS-□A			AS2002FS-□A		AS2052FS-□A		AS3002FS-□A				AS4002FS-□A	
Tubing O.D.	Metric size	Ø 3.2	Ø 4	Ø 6	Ø 4	Ø 6	Ø 6	Ø 8	Ø 6	Ø 8	Ø 10	Ø 12	Ø 10	Ø 12
	Inch size	Ø 1/8"	Ø 5/32"	Ø 1/4"	Ø 5/32"	Ø 1/4"	Ø 1/4"	Ø 5/16"	Ø 1/4"	Ø 5/16"	Ø 3/8"	—	Ø 3/8"	Ø 1/2"
C values: Sonic conductance $dm^3/(s \cdot bar)$	Free flow	0.3	0.4	0.6	0.4	0.6	1.0	1.2	1.1	1.6	2.2	2.6	2.4	3.5
	Controlled flow	0.3			0.4	0.6	1.0	1.2	1.3	1.9	2.7	3.3	2.8	4.1
b values: Critical pressure ratio	Free flow	0.3	0.2		0.3	0.1	0.2		0.2				0.3	0.2
	Controlled flow	0.2	0.3	0.4	0.2		0.2	0.3	0.1		0.2		0.1	0.2

* C and b values are for controlled flow with the needle fully open and free flow with the needle fully closed.
* The same specifications also apply to the AS-FSG series (stainless steel type).

Flow Direction Symbol on Body

Symbol
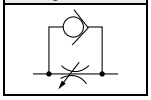

How to Order

AS 200 2 F S – 06 A – □ – □

- **Body size**
- **With One-touch fittings**
- **With indicator**
- **With compact indicator**
- **Made to Order**

Panel mount adapter

–	None
3	With panel mount adapter

100	M5 standard	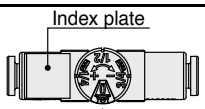 Index plate; Reference point position
200	1/8 standard	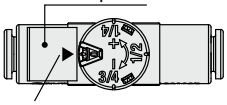 Index plate; Reference point position
205	1/4 standard	
300	3/8 standard	
400	1/2 standard	

Applicable tubing O.D.*1

Metric size		Inch size	
23	Ø 3.2*2	**01**	Ø 1/8"
04	Ø 4	**03**	Ø 5/32"
06	Ø 6	**07**	Ø 1/4"
08	Ø 8	**09**	Ø 5/16"
10	Ø 10	**11**	Ø 3/8"
12	Ø 12	**13**	Ø 1/2"

*1 For selecting applicable tubing O.D., refer to the "Model" shown above.
*2 Use Ø 1/8" tubing.

Made to Order

Made to Order

Lubricant: Vaseline **-X12**

Example) AS2002FS-04A-X12

Grease-free (Seal: Fluorine-coated) + Restrictor (Without check valve) **-X21**

Example) AS2002FS-04A-X21

* Not particle-free
* The parts in contact with fluid are grease-free.

Restrictor (Without check valve) **-X214**

Example) AS2002FS-04A-X214

Clean Series **10-**

Example) 10-AS2002FS-04A

* Fluorine grease is used.
* The cleanliness class (ISO class) is 5.
* The panel mount adapter is packaged in a general environment.

⚠ Caution

Be sure to read this before handling the products. Refer to the back cover for safety instructions. For flow control equipment precautions, refer to the "Handling Precautions for SMC Products" and the "Operation Manual" on the SMC website: https://www.smc.eu

Options

①Adapter for Direct Mounting

∗ For use when the mounting surface interferes with the bonnet.

Part no.	Applicable model
AS-10A1	AS1002FS-□A
AS-20A1	AS2002FS-□A

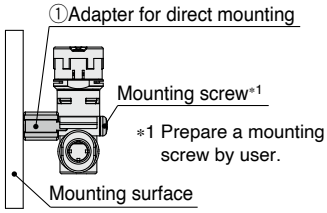

∗ The AS2052FS-□A, AS3002FS-□A, and AS4002FS-□A can be mounted without an adapter.

②DIN Rail Mounting Bracket

Part no.	Applicable model
AS-10D	AS1002FS-□A
AS-20D	AS2002FS-□A
AS-25D	AS2052FS-□A
AS-30D	AS3002FS-□A
AS-40D	AS4002FS-□A

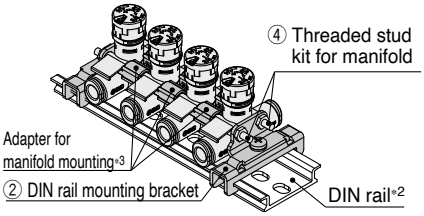

③L-Bracket

Part no.	Applicable model
AS-10L	AS1002FS-□A
AS-20L	AS2002FS-□A
AS-25L	AS2052FS-□A
AS-30L	AS3002FS-□A
AS-40L	AS4002FS-□A

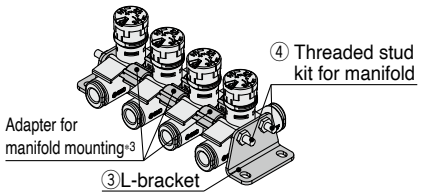

∗2 Prepare DIN rail by user.
∗3 It is included in the threaded stud kit for manifold. Refer to the following details of the kit.

④Threaded Stud Kit for Manifold

Part number				Applicable model	
4 stations	6 stations	8 stations	10 stations	Metric size	Inch size
AS-1AB	**AS-3AB**	**AS-5AB**	**AS-7AB**	AS1002FS-23A	AS1002FS-01A
				AS1002FS-04A	AS1002FS-03A
	AS-4AB	**AS-6AB**	**AS-8AB**	AS1002FS-06A	—
AS-2AB			**AS-23AB**	—	AS1002FS-07A
AS-9AB	**AS-10AB**	**AS-11AB**	**AS-12AB**	AS2002FS-04A	AS2002FS-03A
				AS2002FS-06A	—
				—	AS2002FS-07A
AS-41B	**AS-42B**	**AS-44B**	**AS-45B**	AS2052FS-06A	—
				—	AS2052FS-07A
				AS2052FS-08A	AS2052FS-09A
AS-42B	**AS-44B**	**AS-45B**	**AS-47B**	AS3002FS-06A	—
	AS-44B			—	AS3002FS-07A
				AS3002FS-08A	AS3002FS-09A
				AS3002FS-10A	—
		AS-46B		—	AS3002FS-11A
				AS3002FS-12A	—
AS-43B	**AS-45B**	**AS-47B**	**AS-48B**	AS4002FS-10A	—
				—	AS4002FS-11A
				AS4002FS-12A	—
				—	AS4002FS-13A

∗ AS2052FS□A to AS4002FS□A sizes can be mounted with the threaded stud kit only.

Details of Threaded Stud Kit for Manifold

Part no.	Adapter for manifold mounting		Threaded stud		Accessories			
	Part no.	Quantity	Length	Quantity	Hexagon nut	Quantity	Flat washer	Quantity
AS-1AB	AS-10A	3	72	2	M3	4	M3	4
AS-2AB			90	2				
AS-3AB		5	104	2				
AS-4AB			114	2				
AS-5AB		7	135	2				
AS-6AB			143	2				
AS-7AB		9	167	2				
AS-8AB			170	2				
AS-23AB			180	2				
AS-9AB	AS-20A	3	90	2				
AS-10AB		5	135	2				
AS-11AB		7	180	2				
AS-12AB		9	220	2				
AS-41B	—		78	2	M4	4	M4	4
AS-42B			111	2				
AS-43B			119	2				
AS-44B			147	2				
AS-45B			179	2				
AS-46B			191	2				
AS-47B			236	2				
AS-48B			277	2				

Ordering Example

Threaded studs for manifold are not included when L-bracket and DIN rail mounting bracket are ordered. Please order them according to the number of stations.

Ex.) AS2002FS-06A

When connecting 4 pcs. and mounting L-brackets on both sides

- Speed controller **AS2002FS-06A** 4 pcs.
- L-bracket **AS-20L** ····· 2 pcs.
- Threaded stud kit for manifold **AS-9AB** ····· 1 set
  (Adapter for manifold mounting is included.)

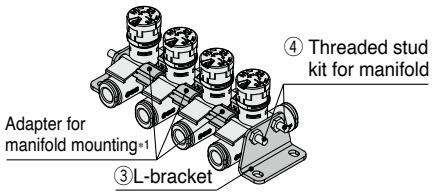

∗1 It is included in the threaded stud kit for manifold. Refer to the details of the kit shown on the left.

Options

④ Panel Mount Adapter

Panel mount adapter model: Refer to the tables below.
Metric Size Table

Applicable series	Applicable tubing O.D.					
	23	04	06	08	10	12
	Ø 3.2	Ø 4	Ø 6	Ø 8	Ø 10	Ø 12
AS1002FS-□A	**PMA-1002-A**		**PMA-1002-B**	—	—	—
AS2002FS-□A	—	**PMA-2002**		—	—	—
AS2052FS-□A	—	—	**PMA-2052**		—	—
AS3002FS-□A	—	—	**PMA-3002**			
AS4002FS-□A	—	—	—	—	**PMA-4002**	

∗ For the AS 1 0 0 2 FS, the part number varies depending on the applicable tubing O.D.

④ Panel Mount Adapter

Panel mount adapter model: Refer to the tables below.
Inch Size Table

Applicable series	Applicable tubing O.D.					
	01	03	07	09	11	13
	Ø 1/8"	Ø 5/32"	Ø 1/4"	Ø 5/16"	Ø 3/8"	Ø 1/2"
AS1002FS-□A	**PMA-1002-A**		**PMA-1002-B**	—	—	—
AS2002FS-□A	—	**PMA-2002**		—	—	—
AS2052FS-□A	—	—	**PMA-2052**		—	—
AS3002FS-□A	—	—	**PMA-3002**			—
AS4002FS-□A	—	—	—	—	**PMA-4002**	

∗ For the AS 1 0 0 2 FS, the part number varies depending on the applicable tubing O.D.

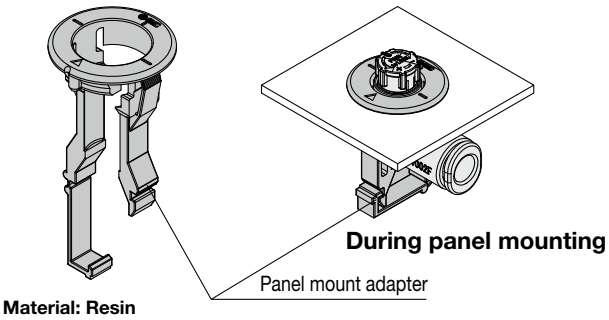

Needle Valve: Flow Rate Characteristics

∗ The flow rate characteristics are representative values.

AS1002FS-□A

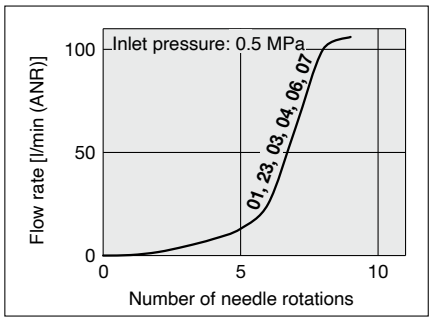

AS2002FS-□A

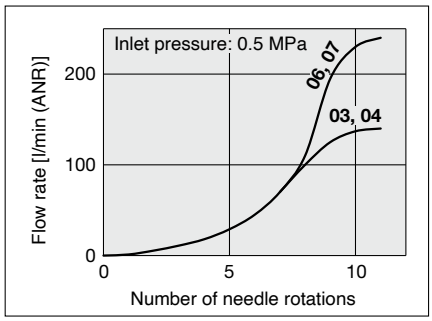

AS2052FS-□A

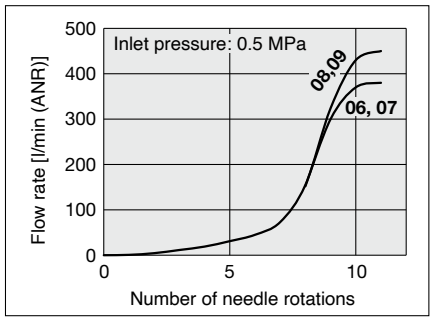

AS3002FS-□A

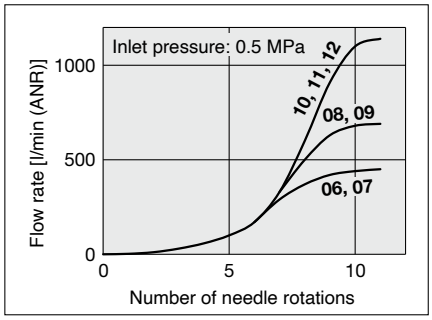

AS4002FS-□A

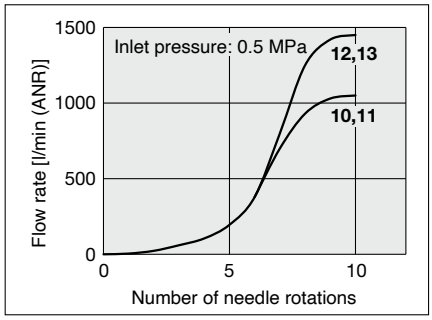

∗ The numbers above the flow rate characteristic curves in the charts show the applicable tubing outside diameter as defined by the product number.

Refer to the operation manual for the construction.

Dimensions

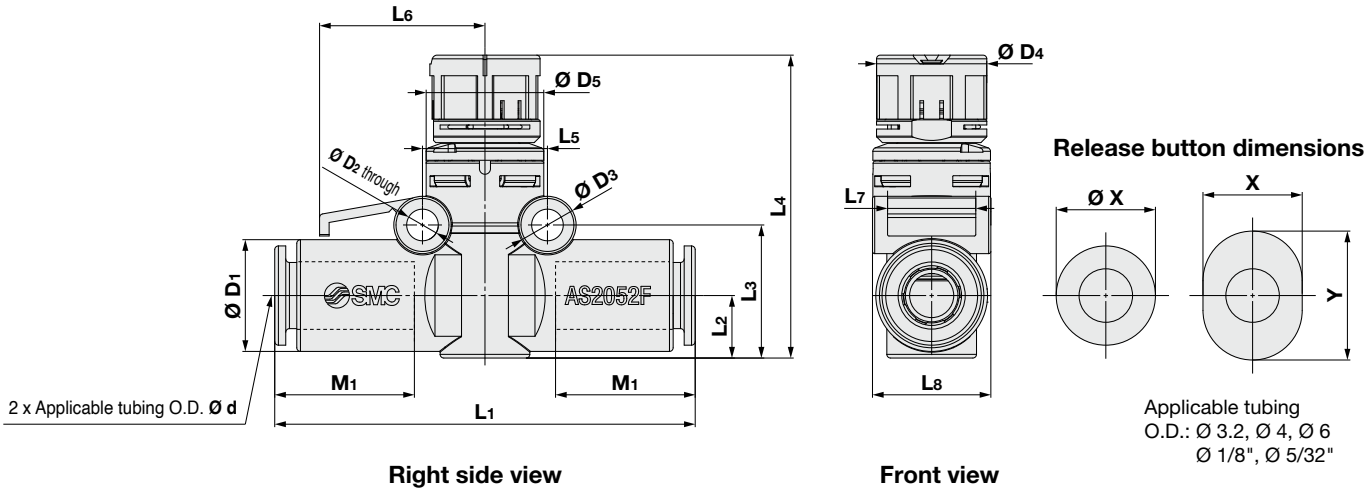

Metric Size

[mm]

Model	Applicable tubing O.D. Ø d	D1	Release button Ø X (X)	Release button Y	D2	D3	D4	D5	L1	L2	L3	L4*1 Max.	L4*1 Min.	L5	L6	L7	L8	M1	Weight [g]
AS1002FS-23A	3.2	8.4	6.7	9.5	3.3	5.5	11	10	36.6	5.1	11.8	29.6	28.5	11	15.4	8.8	10.1	13.5	4.4
AS1002FS-04A	4	9.3	7.7	10	3.3	5.5	11	10	37.6	5.1	11.8	29.6	28.5	11	15.4	8.8	10.1	13	4.7
AS1002FS-06A	6	11.6	9.7	12	3.3	5.5	11	10	40.1	6.1	12.8	30.6	29.5	11	15.4	8.8	12.3	13	5.8
AS2002FS-04A	4	9.3	7.7	10	3.3	5.5	14	12	41.3	6.3	13.4	37.2	35.7	12.6	17	10.5	12.3	13	6.9
AS2002FS-06A	6	11.6	9.7	12	3.3	5.5	14	12	43.1	6.3	13.4	37.2	35.7	12.6	17	10.5	12.3	13	7.8
AS2052FS-06A	6	12.8	11.5	—	4.3	7.8	15	16	54.2	7.6	17.2	42.6	41.1	17	22.5	12	16.1	17	13.2
AS2052FS-08A	8	15.2	13.5	—	4.3	7.8	15	16	57.2	8.5	18.1	43.5	42	17	22.5	12	16.1	19	15.6
AS3002FS-06A	6	13.2	11.5	—	4.5	8	17.7	20	60	9.8	21.7	49.9	48.4	21.8	25	12	20.5	17	20.6
AS3002FS-08A	8	15.2	13.5	—	4.5	8	17.7	20	65	9.8	21.7	49.9	48.4	21.8	25	12	20.5	19	22.8
AS3002FS-10A	10	18.5	16.5	—	4.5	8	17.7	20	70.4	9.8	21.7	49.9	48.4	21.8	25	12	20.5	21	27.4
AS3002FS-12A	12	20.9	18.5	—	4.5	8	17.7	20	76	10.9	22.8	51	49.5	21.8	25	12	22.1	22	31
AS4002FS-10A	10	18.5	16.5	—	4.3	8	19.7	26	76.9	11.3	23.7	58.7	57.2	28	33	14	26.2	21	39.4
AS4002FS-12A	12	21.7	18.5	—	4.3	8	19.7	26	81.3	11.3	23.7	58.7	57.2	28	33	14	26.2	22	44.8

*1 Reference dimensions

Inch Size

[mm]

Model	Applicable tubing O.D. Ø d	D1	Release button Ø X (X)	Release button Y	D2	D3	D4	D5	L1	L2	L3	L4*2 Max.	L4*2 Min.	L5	L6	L7	L8	M1	Weight [g]
AS1002FS-01A	1/8"	8.4	6.7	9.5	3.3	5.5	11	10	36.6	5.1	11.8	29.6	28.5	11	15.4	8.8	10.1	13.5	4.26
AS1002FS-03A	5/32"	9.3	7.7	10	3.3	5.5	11	10	37.6	5.1	11.8	29.6	28.5	11	15.4	8.8	10.1	13	4.56
AS1002FS-07A	1/4"	12	10.9	—	3.3	5.5	11	10	40.1	6.2	12.9	30.7	29.6	11	15.4	8.8	12.8	13.5	5.76
AS2002FS-03A	5/32"	9.3	7.7	10	3.3	5.5	14	12	41.3	6.3	13.4	37.2	35.7	12.6	17	10.5	12.3	13	7.05
AS2002FS-07A	1/4"	12	10.9	—	3.3	5.5	14	12	43.2	6.5	13.6	37.4	35.9	12.6	17	10.5	12.8	13.5	8.15
AS2052FS-07A	1/4"	13.2	12	—	4.3	7.8	15	16	53.4	7.6	17.2	42.6	41.1	17	22.5	12	16.1	17	13.6
AS2052FS-09A	5/16"	15.2	13.5	—	4.3	7.8	15	16	57.2	8.5	18.1	43.5	42	17	22.5	12	16.1	19	15.6
AS3002FS-07A	1/4"	13.2	12	—	4.5	8	17.7	20	59	9.8	21.7	49.9	48.4	21.8	25	12	20.5	17	20.4
AS3002FS-09A	5/16"	15.2	13.5	—	4.5	8	17.7	20	65	9.8	21.7	49.9	48.4	21.8	25	12	20.5	19	22.8
AS3002FS-11A	3/8"	18.5	16	—	4.5	8	17.7	20	69.8	9.8	21.7	49.9	48.4	21.8	25	12	20.5	21	34.9
AS4002FS-11A	3/8"	18.5	16	—	4.3	8	19.7	26	76.9	11.3	23.7	58.7	57.2	28	33	14	26.2	21	47.1
AS4002FS-13A	1/2"	21.7	20	—	4.3	8	19.7	26	81.3	11.3	23.7	58.7	57.2	28	33	14	26.2	22	54.3

*2 Reference dimensions

Dimensions: With Panel Mount Adapter

Refer to the operation manual for panel mounting instructions.

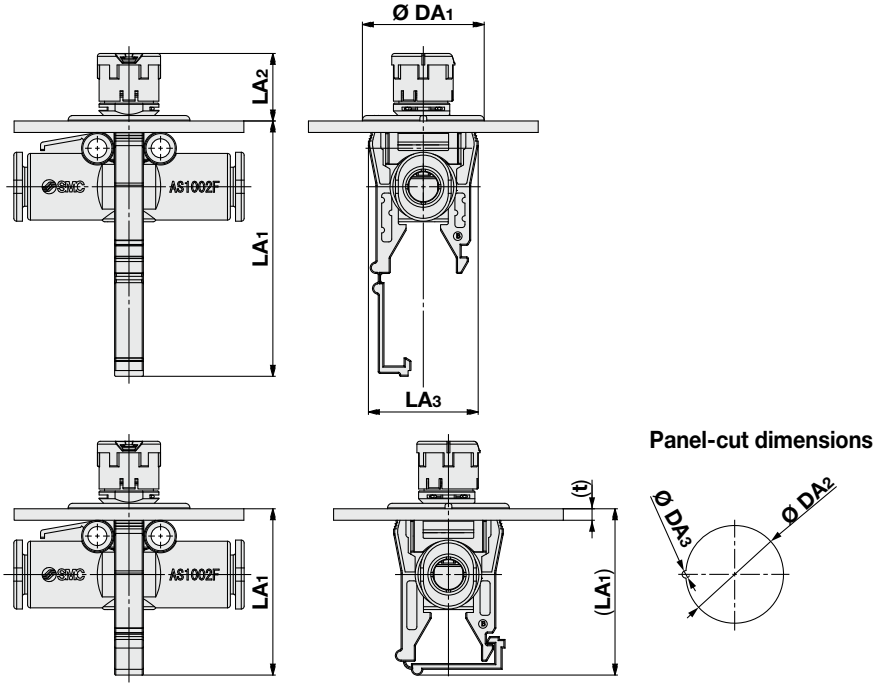

Metric Size

[mm]

Model	Applicable tubing O.D. Ø **d**	**LA1**∗1		**LA2**∗1		**LA3**∗2	Ø **DA1**	Panel-cut dimensions		Applicable panel thickness **t**	Weight [g]
		Max.	Min.	Max.	Min.			Ø **DA2**∗3 (+0.1/0)	Ø **DA3**∗3 (+0.1/0)		
AS1002FS(G)-23A-3	3.2	44.5	29.0	13.0	11.9	19.1	Ø 21.2	Ø 17.5	Ø 2	1 to 2	6
AS1002FS(G)-04A-3	4	44.5	29.0	13.0	11.9	19.1	Ø 21.2	Ø 17.5	Ø 2		6
AS1002FS(G)-06A-3	6	44.5	29.0	13.0	11.9	19.1	Ø 21.2	Ø 17.5	Ø 2		7
AS2002FS(G)-04A-3	4	53.3	35.2	14.4	12.9	22.1	Ø 24.2	Ø 20.5	Ø 2	1 to 3.5	9
AS2002FS(G)-06A-3	6	53.3	35.2	14.4	12.9	22.1	Ø 24.2	Ø 20.5	Ø 2		10
AS2052FS(G)-06A-3	6	59.2	39.6	16.5	15.0	24.1	Ø 26.7	Ø 22.5	Ø 2.5		16
AS2052FS(G)-08A-3	8	59.2	39.6	16.5	15.0	24.1	Ø 26.7	Ø 22.5	Ø 2.5		18
AS3002FS(G)-06A-3	6	67.0	44.2	18.3	16.8	28.1	Ø 31.2	Ø 26	Ø 3		25
AS3002FS(G)-08A-3	8	67.0	44.2	18.3	16.8	28.1	Ø 31.2	Ø 26	Ø 3		27
AS3002FS(G)-10A-3	10	67.0	44.2	18.3	16.8	28.1	Ø 31.2	Ø 26	Ø 3		31
AS3002FS(G)-12A-3	12	67.0	44.2	18.3	16.8	28.1	Ø 31.2	Ø 26	Ø 3		35
AS4002FS(G)-10A-3	10	74.1	48.5	20.4	18.9	34.1	Ø 39.2	Ø 32.5	Ø 5		46
AS4002FS(G)-12A-3	12	74.1	48.5	20.4	18.9	34.1	Ø 39.2	Ø 32.5	Ø 5		51

∗1 Reference dimensions
∗2 Max. dimension before panel mounting
∗3 Be sure to check the following dimensional tolerances or the "Specific Product Precautions" page before cutting the panel. Ø DA2 [+0.1/0] Ø DA3 [+0.1/0]
In addition, the centre position of Ø DA3 is on the circumference of Ø DA2.
∗ Refer to the speed controller dimensions on page 6 for the dimensions of speed controllers not listed in this table.

Inch Size

[mm]

Model	Applicable tubing O.D. Ø **d**	**LA1**∗1		**LA2**∗1		**LA3**∗2	Ø **DA1**	Panel-cut dimensions		Applicable panel thickness **t**	Weight [g]
		Max.	Min.	Max.	Min.			Ø **DA2**∗3 (+0.1/0)	Ø **DA3**∗3 (+0.1/0)		
AS1002FS(G)-01A-3	1/8"	44.5	29.0	13.0	11.9	19.1	Ø 21.2	Ø 17.5	Ø 2	1 to 2	6
AS1002FS(G)-03A-3	5/32"	44.5	29.0	13.0	11.9	19.1	Ø 21.2	Ø 17.5	Ø 2		6
AS1002FS(G)-07A-3	1/4"	44.5	29.0	13.0	11.9	19.1	Ø 21.2	Ø 17.5	Ø 2		7
AS2002FS(G)-03A-3	5/32"	53.3	35.2	14.4	12.9	22.1	Ø 24.2	Ø 20.5	Ø 2	1 to 3.5	9
AS2002FS(G)-07A-3	1/4"	53.3	35.2	14.4	12.9	22.1	Ø 24.2	Ø 20.5	Ø 2		10
AS2052FS(G)-07A-3	1/4"	59.2	39.6	16.5	15.0	24.1	Ø 26.7	Ø 22.5	Ø 2.5		16
AS2052FS(G)-09A-3	5/16"	59.2	39.6	16.5	15.0	24.1	Ø 26.7	Ø 22.5	Ø 2.5		18
AS3002FS(G)-07A-3	1/4"	67.0	44.2	18.3	16.8	28.1	Ø 31.2	Ø 26	Ø 3		24
AS3002FS(G)-09A-3	5/16"	67.0	44.2	18.3	16.8	28.1	Ø 31.2	Ø 26	Ø 3		27
AS3002FS(G)-11A-3	3/8"	67.0	44.2	18.3	16.8	28.1	Ø 31.2	Ø 26	Ø 3		39
AS4002FS(G)-11A-3	3/8"	74.1	48.5	20.4	18.9	34.1	Ø 39.2	Ø 32.5	Ø 5		53
AS4002FS(G)-13A-3	1/2"	74.1	48.5	20.4	18.9	34.1	Ø 39.2	Ø 32.5	Ø 5		60

∗1 Reference dimensions
∗2 Max. dimension before panel mounting
∗3 Be sure to check the following dimensional tolerances or the "Specific Product Precautions" page before cutting the panel. Ø DA2 [+0.1/0] Ø DA3 [+0.1/0]
In addition, the centre position of Ø DA3 is on the circumference of Ø DA2.
∗ Refer to the speed controller dimensions on page 6 for the dimensions of speed controllers not listed in this table.

Dimensions

L-Bracket
Bracket on a single side

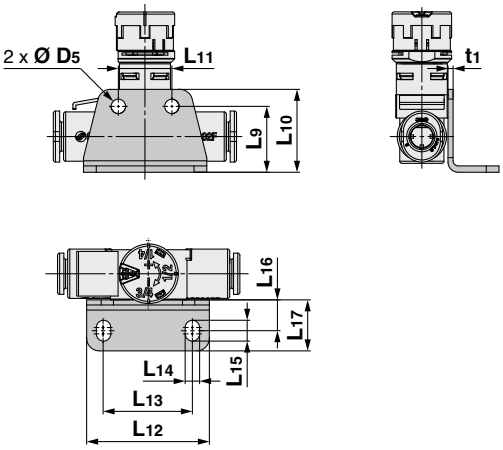

DIN Rail Mounting Bracket
Bracket on a single side

AS1002FS-□A
AS2002FS-□A

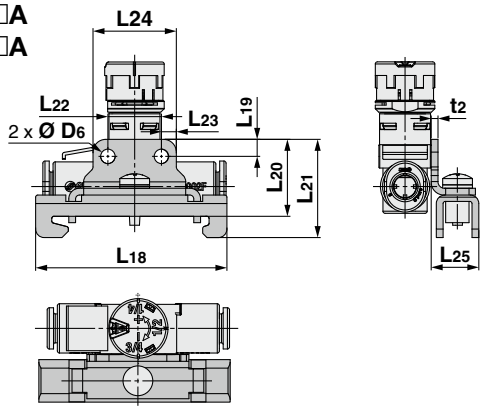

AS2052FS-□A
AS3002FS-□A
AS4002FS-□A

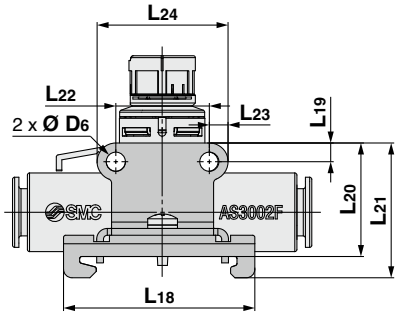

Part no.	Applicable model	D5	L9	L10	L11	L12	L13	L14	L15	L16	L17	t1
AS-10L	AS1002FS-□A	3.4	14.8	18.3	11	27.5	19.5	3.4	4.9	7.3	12	1
AS-20L	AS2002FS-□A		15.6	19.6	12.6	29	21					1.2
AS-25L	AS2052FS-□A	4.5	19.6	24.6	17	38	28	4.5	6.5	9.5	15.5	
AS-30L	AS3002FS-□A		24.8	29.8	22	43	33					1.4
AS-40L	AS4002FS-□A		25.7	30.7	28	49	39					

Part no.	Applicable model	D6	L18	L19	L20	L21	L22	L23	L24	L25	t2
AS-10D	AS1002FS-□A	3.4	45	3.5	18.2	23.2	11	3.5	18	11.3	1.6
AS-20D	AS2002FS-□A				18.6	23.6	12.6		19.6		
AS-25D	AS2052FS-□A	4.5		4.4	22	27	17	4.4	25.8		
AS-30D	AS3002FS-□A				27.2	32.2	22		30.8		
AS-40D	AS4002FS-□A				28.1	33.1	28		36.8		

Adapter for Manifold Mounting
Part no.: AS-□□A

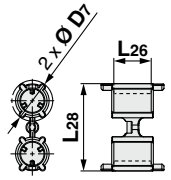

Part no.	Applicable model	D7	L26	L28
AS-10A	AS1002FS-□A	9.2	4	18.7
AS-20A	AS2002FS-□A	9.4	8.8	20.4

∗ The AS2052FS-□A, AS3002FS-□A, and AS4002FS-□A can be mounted without an adapter.

Adapter for Direct Mounting
Part no.: AS-□□A1

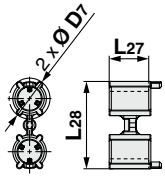

Part no.	Applicable model	D7	L27	L28
AS-10A1	AS1002FS-□A	9.2	4.5	18.7
AS-20A1	AS2002FS-□A	9.4	9.3	20.4

∗ The AS2052FS-□A, AS3002FS-□A, and AS4002FS-□A can be mounted without an adapter.

L-Bracket
Brackets on both sides

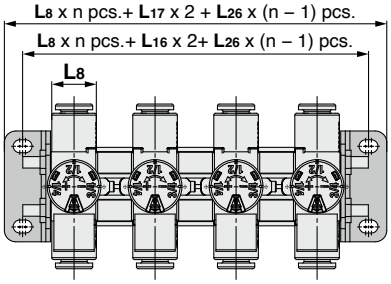

∗ Refer to page 5 for L8.
∗ The figure above shows the manifold with speed controllers connected using two L-brackets, adapters and a threaded stud kit for manifold.
Refer to page 3 for threaded stud kits for manifold.

DIN Rail Mounting Bracket
Brackets on both sides

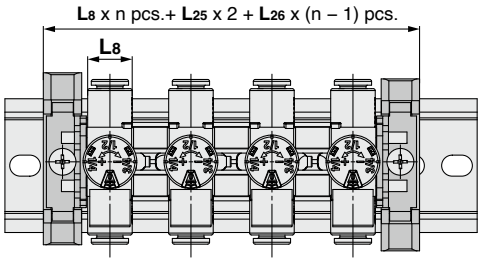

∗ Refer to page 5 for L8.
∗ The figure above shows the manifold with speed controllers connected using two DIN rail mounting brackets, adapters and a threaded stud kit for manifold.
Refer to page 3 for threaded stud kits for manifold.

Adapter
Direct mounting

∗ For use when the mounting surface interferes with the knob.

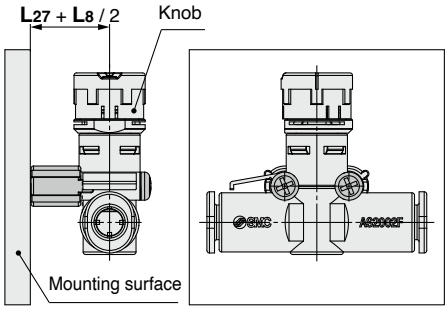

∗ Refer to page 5 for L8.
∗ The AS2052FS-□A, AS3002FS-□A, and AS4002FS-□A can be mounted without an adapter.

Speed Controller with Compact Indicator
Stainless Steel Series
In-line Type
AS-FSGA Series

RoHS

In-line Stainless steel

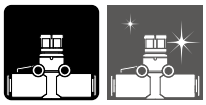

Model

Model	Applicable tubing O.D.											
	Metric size						Inch size					
	3.2	4	6	8	10	12	1/8"	5/32"	1/4"	5/16"	3/8"	1/2"
AS1002FSG-□A	●	●	●				●	●	●			
AS2002FSG-□A		●	●					●	●			
AS2052FSG-□A			●	●					●	●		
AS3002FSG-□A			●	●	●	●			●	●	●	
AS4002FSG-□A					●	●					●	●

Specifications

Fluid	Air
Proof pressure	1.5 MPa
Max. operating pressure	1 MPa
Min. operating pressure	0.1 MPa
Ambient and fluid temperatures	-5 to 60 °C (No freezing)
Applicable tubing material	Nylon, Soft nylon, Polyurethane*1, FEP, PFA

*1 Use caution at the max. operating pressure when using soft nylon or polyurethane tubing. (Refer to the **web catalogue on www.smc.eu** for details.)

Flow Rate and Sonic Conductance

Model		AS1002FSG-□A			AS2002FSG-□A		AS2052FSG-□A		AS3002FSG-□A				AS4002FSG-□A	
Tubing O.D.	Metric size	Ø 3.2	Ø 4	Ø 6	Ø 4	Ø 6	Ø 6	Ø 8	Ø 6	Ø 8	Ø 10	Ø 12	Ø 10	Ø 12
	Inch size	Ø 1/8"	Ø 5/32"	Ø 1/4"	Ø 5/32"	Ø 1/4"	Ø 1/4"	Ø 5/16"	Ø 1/4"	Ø 5/16"	Ø 3/8"	—	Ø 3/8"	Ø 1/2"
C values: Sonic conductance $dm^3/(s \cdot bar)$	Free flow	0.3	0.4	0.6	0.4	0.6	1.0	1.2	1.1	1.6	2.2	2.6	2.4	3.5
	Controlled flow	0.3			0.4	0.6	1.0	1.2	1.3	1.9	2.7	3.3	2.8	4.1
b values: Critical pressure ratio	Free flow	0.3	0.2		0.3	0.1	0.2		0.2				0.3	0.2
	Controlled flow	0.2	0.3	0.4	0.2		0.2	0.3	0.1		0.2		0.1	0.2

* C and b values are for controlled flow with the needle fully open and free flow with the needle fully closed.
* The same specifications also apply to the AS-FSG series (stainless steel type).

Flow Direction Symbol on Body

Symbol
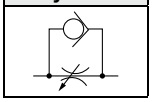

How to Order

AS 200 2 F S G – 06 A – [ ]

- **Body size**

100	M5 standard
200	1/8 standard
205	1/4 standard
300	3/8 standard
400	1/2 standard

- **With One-touch fittings**
- **With indicator**
- **Stainless steel type (Stainless steel 303)**
  * The material can be visually identified by colour of the release button.
    Stainless steel type: White
  * White is also used for inch size.
- **Applicable tubing O.D.*1**

Metric size		Inch size	
23	Ø 3.2*2	**01**	Ø 1/8"
04	Ø 4	**03**	Ø 5/32"
06	Ø 6	**07**	Ø 1/4"
08	Ø 8	**09**	Ø 5/16"
10	Ø 10	**11**	Ø 3/8"
12	Ø 12	**13**	Ø 1/2"

*1 For selecting applicable tubing O.D., refer to the "Model" shown above.
*2 Use Ø 1/8" tubing.

- **With compact indicator**
- **Made to Order**

Made to Order

Made to Order

Lubricant: Vaseline **-X12**

Example) AS2002FSG-04A-X12

Grease-free (Seal: Fluorine-coated) + Restrictor (Without check valve) **-X21**

Example) AS2002FSG-04A-X21

* Not particle-free
* The parts in contact with fluid are grease-free.

Restrictor (Without check valve) **-X214**

Example) AS2002FSG-04A-X214

Clean Series **10-**

Example) 10-AS2002FSG-04A

* Fluorine grease is used.
* The cleanliness class (ISO class) is 5.

Options

①Adapter for Direct Mounting

∗ For use when the mounting surface interferes with the bonnet.

Part no.	Applicable model
AS-10A1	AS1002FSG-□A
AS-20A1	AS2002FSG-□A

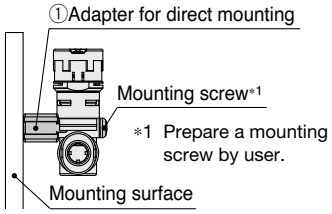

∗ The AS2052FSG-□A, AS3002FSG-□A, and AS4002FSG-□A can be mounted without an adapter.

②DIN Rail Mounting Bracket

Part no.	Applicable model
AS-10D	AS1002FSG-□A
AS-20D	AS2002FSG-□A
AS-25D	AS2052FSG-□A
AS-30D	AS3002FSG-□A
AS-40D	AS4002FSG-□A

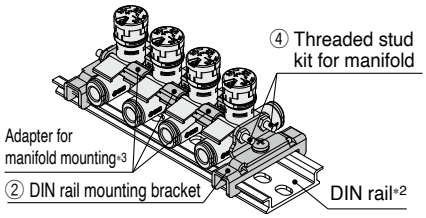

③L-Bracket

Part no.	Applicable model
AS-10L	AS1002FSG-□A
AS-20L	AS2002FSG-□A
AS-25L	AS2052FSG-□A
AS-30L	AS3002FSG-□A
AS-40L	AS4002FSG-□A

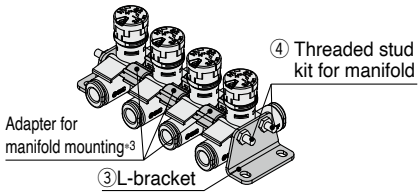

∗2 Prepare DIN rail by user.
∗3 It is included in the threaded stud kit for manifold. Refer to the following details of the kit.

④Threaded Stud Kit for Manifold

Part number				Applicable model	
4 stations	6 stations	8 stations	10 stations	Metric size	Inch size
AS-1AB	**AS-3AB**	**AS-5AB**	**AS-7AB**	AS1002FSG-23A	AS1002FSG-01A
				AS1002FSG-04A	AS1002FSG-03A
	AS-4AB	**AS-6AB**	**AS-8AB**	AS1002FSG-06A	—
AS-2AB			**AS-23AB**	—	AS1002FSG-07A
AS-9AB	**AS-10AB**	**AS-11AB**	**AS-12AB**	AS2002FSG-04A	AS2002FSG-03A
				AS2002FSG-06A	—
				—	AS2002FSG-07A
AS-41B	**AS-42B**	**AS-44B**	**AS-45B**	AS2052FSG-06A	—
				—	AS2052FSG-07A
				AS2052FSG-08A	AS2052FSG-09A
AS-42B	**AS-44B**	**AS-45B**	**AS-47B**	AS3002FSG-06A	—
				—	AS3002FSG-07A
	AS-44B			AS3002FSG-08A	AS3002FSG-09A
				AS3002FSG-10A	—
		AS-46B		—	AS3002FSG-11A
				AS3002FSG-12A	—
AS-43B	**AS-45B**	**AS-47B**	**AS-48B**	AS4002FSG-10A	—
				—	AS4002FSG-11A
				AS4002FSG-12A	—
				—	AS4002FSG-13A

∗ AS2052FS□A to AS4002FS□A sizes can be mounted with the threaded stud kit only.

Details of Threaded Stud Kit for Manifold

Part no.	Adapter for manifold mounting		Threaded stud		Accessories			
	Part no.	Quantity	Length	Quantity	Hexagon nut	Quantity	Flat washer	Quantity
AS-1AB	AS-10A	3	72	2	M3	4	M3	4
AS-2AB			90	2				
AS-3AB		5	104	2				
AS-4AB			114	2				
AS-5AB		7	135	2				
AS-6AB			143	2				
AS-7AB		9	167	2				
AS-8AB			170	2				
AS-23AB			180	2				
AS-9AB	AS-20A	3	90	2				
AS-10AB		5	135	2				
AS-11AB		7	180	2				
AS-12AB		9	220	2				
AS-41B	—		78	2	M4	4	M4	4
AS-42B			111	2				
AS-43B			119	2				
AS-44B			147	2				
AS-45B			179	2				
AS-46B			191	2				
AS-47B			236	2				
AS-48B			277	2				

Ordering Example

Threaded studs for manifold are not included when L-bracket and DIN rail mounting bracket are ordered. Please order them according to the number of stations.

Ex.) AS2002FSG-06A

When connecting 4 pcs. and mounting L-brackets on both sides

- Speed controller **AS2002FSG-06A** ·· 4 pcs.
- L-bracket **AS-20L** ····· 2 pcs.
- Threaded stud kit for manifold **AS-9AB** ····· 1 set
  (Adapter for manifold mounting is included.)

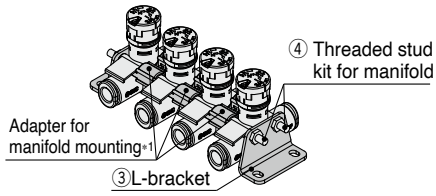

∗1 It is included in the threaded stud kit for manifold. Refer to the details of the kit shown on the left.

Options

④ Panel Mount Adapter

Panel mount adapter model: Refer to the tables below.

Metric Size Table

Applicable series	Applicable tubing O.D.					
	23	04	06	08	10	12
	Ø 3.2	Ø 4	Ø 6	Ø 8	Ø 10	Ø 12
AS1002FSG-□A	**PMA-1002-A**		**PMA-1002-B**	—	—	—
AS2002FSG-□A	—	**PMA-2002**		—	—	—
AS2052FSG-□A	—	—	**PMA-2052**		—	—
AS3002FSG-□A	—	—	**PMA-3002**			
AS4002FSG-□A	—	—	—	—	**PMA-4002**	

∗ For the AS 1 0 0 2 FSG, the part number varies depending on the applicable tubing O.D.

④ Panel Mount Adapter

Panel mount adapter model: Refer to the tables below.

Inch Size Table

Applicable series	Applicable tubing O.D.					
	01	03	07	09	11	13
	Ø 1/8"	Ø 5/32"	Ø 1/4"	Ø 5/16"	Ø 3/8"	Ø 1/2"
AS1002FSG-□A	**PMA-1002-A**		**PMA-1002-B**	—	—	—
AS2002FSG-□A	—	**PMA-2002**		—	—	—
AS2052FSG-□A	—	—	**PMA-2052**		—	—
AS3002FSG-□A	—	—	**PMA-3002**			—
AS4002FSG-□A	—	—	—	—	**PMA-4002**	

∗ For the AS 1 0 0 2 FSG, the part number varies depending on the applicable tubing O.D.

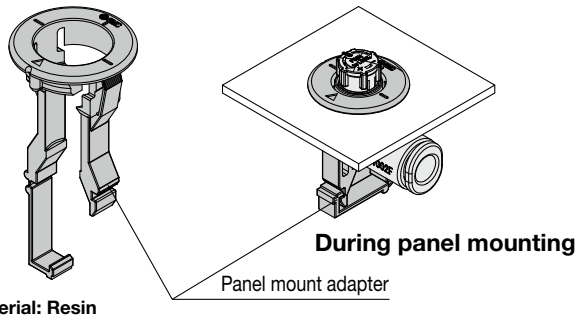

The dimensions when the panel mount adapter is mounted to the speed controller are the same as those of the standard AS□□□□2FS-□A-3 (brass type). Refer to page 6.

Needle Valve: Flow Rate Characteristics

∗ The flow rate characteristics are representative values.

AS1002FSG-□A

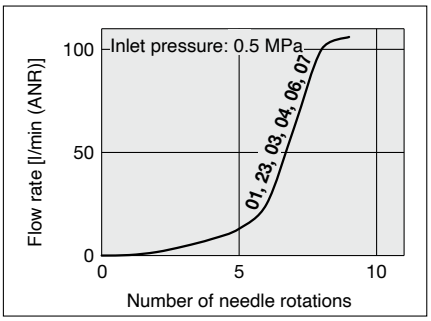

AS2002FSG-□A

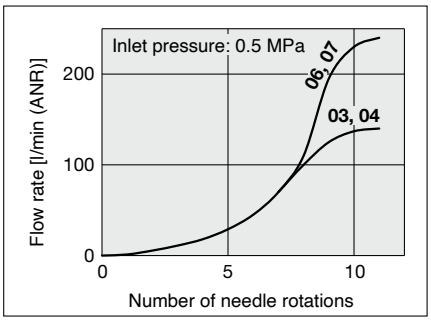

AS2052FSG-□A

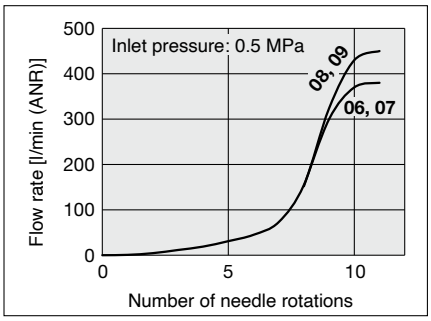

AS3002FSG-□A

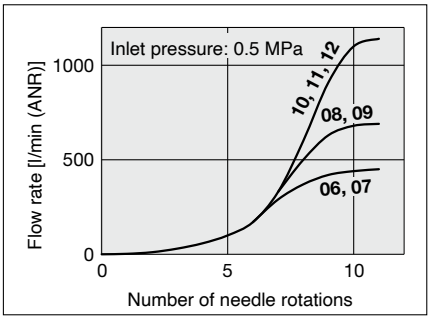

AS4002FSG-□A

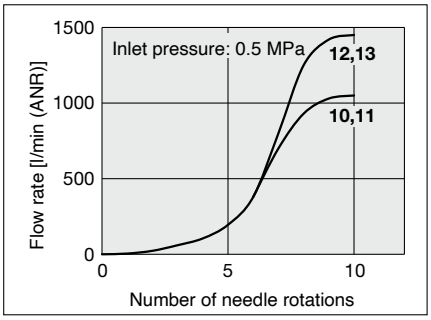

∗ The numbers above the flow rate characteristic curves in the charts show the applicable tubing outside diameter as defined by the product number.

Refer to the operation manual for the construction.

Dimensions

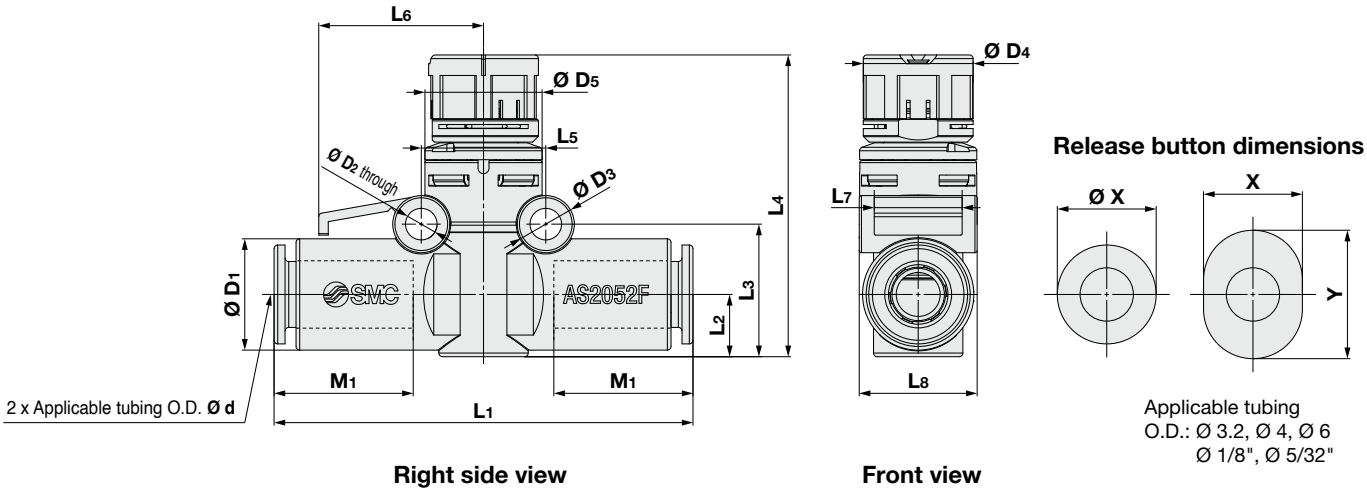

Metric Size

[mm]

Model	Applicable tubing O.D. Ø d	D_1	Release button		D_2	D_3	D_4	D_5	L_1	L_2	L_3	L_4*1		L_5	L_6	L_7	L_8	M_1	Weight [g]
			Ø X (X)	Y								Max.	Min.						
AS1002FSG-23A	3.2	8.4	6.7	9.5	3.3	5.5	11	10	36.6	5.1	11.8	29.6	28.5	11	15.4	8.8	10.1	13.5	4.4
AS1002FSG-04A	4	9.3	7.7	10	3.3	5.5	11	10	37.6	5.1	11.8	29.6	28.5	11	15.4	8.8	10.1	13	4.7
AS1002FSG-06A	6	11.6	9.7	12	3.3	5.5	11	10	40.1	6.1	12.8	30.6	29.5	11	15.4	8.8	12.3	13	5.8
AS2002FSG-04A	4	9.3	7.7	10	3.3	5.5	14	12	41.3	6.3	13.4	37.2	35.7	12.6	17	10.5	12.3	13	6.9
AS2002FSG-06A	6	11.6	9.7	12	3.3	5.5	14	12	43.1	6.3	13.4	37.2	35.7	12.6	17	10.5	12.3	13	7.8
AS2052FSG-06A	6	12.8	11.5	—	4.3	7.8	15	16	54.2	7.6	17.2	42.6	41.1	17	22.5	12	16.1	17	13.2
AS2052FSG-08A	8	15.2	13.5	—	4.3	7.8	15	16	57.2	8.5	18.1	43.5	42	17	22.5	12	16.1	19	15.6
AS3002FSG-06A	6	13.2	11.5	—	4.5	8	17.7	20	60	9.8	21.7	49.9	48.4	21.8	25	12	20.5	17	20.6
AS3002FSG-08A	8	15.2	13.5	—	4.5	8	17.7	20	65	9.8	21.7	49.9	48.4	21.8	25	12	20.5	19	22.8
AS3002FSG-10A	10	18.5	16.5	—	4.5	8	17.7	20	70.4	9.8	21.7	49.9	48.4	21.8	25	12	20.5	21	27.4
AS3002FSG-12A	12	20.9	18.5	—	4.5	8	17.7	20	76	10.9	22.8	51	49.5	21.8	25	12	22.1	22	31
AS4002FSG-10A	10	18.5	16.5	—	4.3	8	19.7	26	76.9	11.3	23.7	58.7	57.2	28	33	14	26.2	21	39.4
AS4002FSG-12A	12	21.7	18.5	—	4.3	8	19.7	26	81.3	11.3	23.7	58.7	57.2	28	33	14	26.2	22	44.8

*1 Reference dimensions

Inch Size

[mm]

Model	Applicable tubing O.D. Ø d	D_1	Release button		D_2	D_3	D_4	D_5	L_1	L_2	L_3	L_4*2		L_5	L_6	L_7	L_8	M_1	Weight [g]
			Ø X (X)	Y								Max.	Min.						
AS1002FSG-01A	1/8"	8.4	6.7	9.5	3.3	5.5	11	10	36.6	5.1	11.8	29.6	28.5	11	15.4	8.8	10.1	13.5	4.26
AS1002FSG-03A	5/32"	9.3	7.7	10	3.3	5.5	11	10	37.6	5.1	11.8	29.6	28.5	11	15.4	8.8	10.1	13	4.56
AS1002FSG-07A	1/4"	12	10.9	—	3.3	5.5	11	10	40.1	6.2	12.9	30.7	29.6	11	15.4	8.8	12.8	13.5	5.76
AS2002FSG-03A	5/32"	9.3	7.7	10	3.3	5.5	14	12	41.3	6.3	13.4	37.2	35.7	12.6	17	10.5	12.3	13	7.05
AS2002FSG-07A	1/4"	12	10.9	—	3.3	5.5	14	12	43.2	6.5	13.6	37.4	35.9	12.6	17	10.5	12.8	13.5	8.15
AS2052FSG-07A	1/4"	13.2	12	—	4.3	7.8	15	16	53.4	7.6	17.2	42.6	41.1	17	22.5	12	16.1	17	13.6
AS2052FSG-09A	5/16"	15.2	13.5	—	4.3	7.8	15	16	57.2	8.5	18.1	43.5	42	17	22.5	12	16.1	19	15.6
AS3002FSG-07A	1/4"	13.2	12	—	4.5	8	17.7	20	59	9.8	21.7	49.9	48.4	21.8	25	12	20.5	17	20.4
AS3002FSG-09A	5/16"	15.2	13.5	—	4.5	8	17.7	20	65	9.8	21.7	49.9	48.4	21.8	25	12	20.5	19	22.8
AS3002FSG-11A	3/8"	18.5	16	—	4.5	8	17.7	20	69.8	9.8	21.7	49.9	48.4	21.8	25	12	20.5	21	34.9
AS4002FSG-11A	3/8"	18.5	16	—	4.3	8	19.7	26	76.9	11.3	23.7	58.7	57.2	28	33	14	26.2	21	47.1
AS4002FSG-13A	1/2"	21.7	20	—	4.3	8	19.7	26	81.3	11.3	23.7	58.7	57.2	28	33	14	26.2	22	54.3

*2 Reference dimensions

Dimensions

L-Bracket
Bracket on a single side

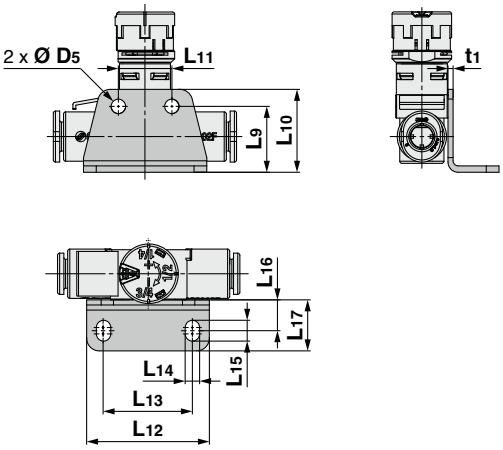

DIN Rail Mounting Bracket
Bracket on a single side

AS1002FSG-□A
AS2002FSG-□A

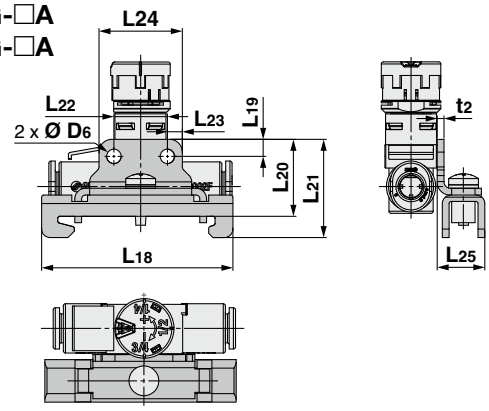

AS2052FSG-□A
AS3002FSG-□A
AS4002FSG-□A

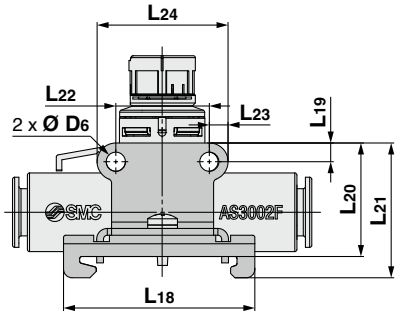

Part no.	Applicable model	D_5	L_9	L_{10}	L_{11}	L_{12}	L_{13}	L_{14}	L_{15}	L_{16}	L_{17}	t_1
AS-10L	**AS1002FSG-□A**	3.4	14.8	18.3	11	27.5	19.5	3.4	4.9	7.3	12	1
AS-20L	**AS2002FSG-□A**		15.6	19.6	12.6	29	21					1.2
AS-25L	**AS2052FSG-□A**	4.5	19.6	24.6	17	38	28	4.5	6.5	9.5	15.5	
AS-30L	**AS3002FSG-□A**		24.8	29.8	22	43	33					1.4
AS-40L	**AS4002FSG-□A**		25.7	30.7	28	49	39					

Part no.	Applicable model	D_6	L_{18}	L_{19}	L_{20}	L_{21}	L_{22}	L_{23}	L_{24}	L_{25}	t_2
AS-10D	**AS1002FSG-□A**	3.4	45	3.5	18.2	23.2	11	3.5	18	11.3	1.6
AS-20D	**AS2002FSG-□A**				18.6	23.6	12.6		19.6		
AS-25D	**AS2052FSG-□A**	4.5		4.4	22	27	17	4.4	25.8		
AS-30D	**AS3002FSG-□A**				27.2	32.2	22		30.8		
AS-40D	**AS4002FSG-□A**				28.1	33.1	28		36.8		

Adapter for Manifold Mounting
Part no.: AS-□□A

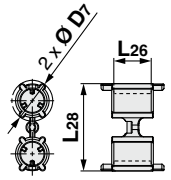

Part no.	Applicable model	D_7	L_{26}	L_{28}
AS-10A	**AS1002FSG-□A**	9.2	4	18.7
AS-20A	**AS2002FSG-□A**	9.4	8.8	20.4

∗ The AS2052FSG-□A, AS3002FSG-□A, and AS4002FSG-□A can be mounted without an adapter.

Adapter for Direct Mounting
Part no.: AS-□□A1

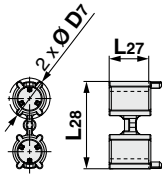

Part no.	Applicable model	D_7	L_{27}	L_{28}
AS-10A1	**AS1002FSG-□A**	9.2	4.5	18.7
AS-20A1	**AS2002FSG-□A**	9.4	9.3	20.4

∗ The AS2052FSG-□A, AS3002FSG-□A, and AS4002FSG-□A can be mounted without an adapter.

L-Bracket
Brackets on both sides

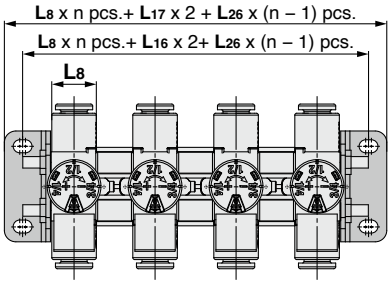

∗ Refer to page 11 for L_8.
∗ The figure above shows the manifold with speed controllers connected using two L-brackets, adapters and a threaded stud kit for manifold.
Refer to page 9 for threaded stud kits for manifold.

DIN Rail Mounting Bracket
Brackets on both sides

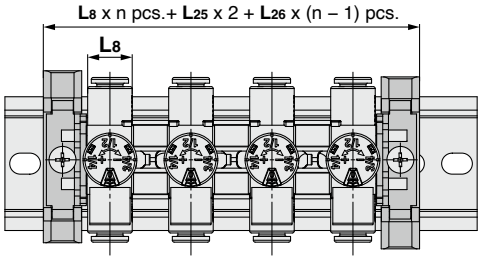

∗ Refer to page 11 for L_8.
∗ The figure above shows the manifold with speed controllers connected using two DIN rail mounting brackets, adapters and a threaded stud kit for manifold.
Refer to page 3 for threaded stud kits for manifold.

Adapter
Direct mounting

∗ For use when the mounting surface interferes with the knob.

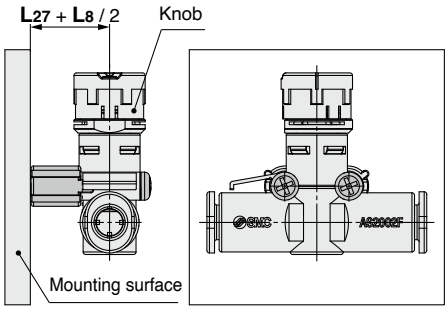

∗ Refer to page 11 for L_8.
∗ The AS2052FSG-□A, AS3002FSG-□A, and AS4002FSG-□A can be mounted without an adapter.

Holder for Speed Controller
TMH Series

A holder for securing a speed controller with One-touch fittings (In-line type)

Possible to hold a single controller

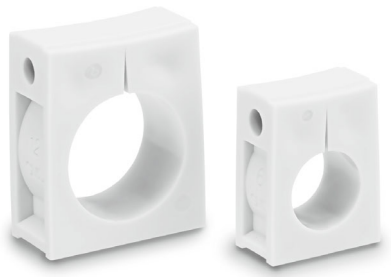

Holder mounting

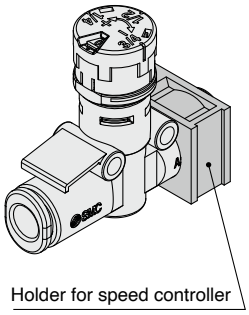

Specifications

Ambient temperature	–20 to 60 °C
Material	Polypropylene
Colour	White

Accessory: Cross Recessed Round Head Screw for Mounting (Zinc chromated)

Part no.		Size (Nominal x Length)	Quantity
Metric size	Inch size		
TMH-23J	**TMH-01J**	M3 x 15	1
TMH-04J	**TMH-03J**		
TMH-06J	**TMH-07J**	M3 x 20	
TMH-06	**TMH-07**	M4 x 25	
TMH-08	**TMH-09**		
TMH-10	–	M4 x 35	
TMH-12	**TMH-13**		

Series

Select the applicable holder/TMH for each speed controller from the table below.

Metric Size

Tubing size / Applicable model	Applicable tubing					
	23	04	06	08	10	12
	Ø 3.2	Ø 4	Ø 6	Ø 8	Ø 10	Ø 12
AS1002FS(G)-□A	**TMH-23J**	**TMH-04J**	**TMH-06J**			
AS2002F(SG)-□A						
AS2052FS(G)-□A			**TMH-06**	**TMH-08**		
AS3002FS(G)-□A			**TMH-07**		**TMH-10**	**TMH-12**
AS4002FS(G)-□A						**TMH-13**

∗ The applicable TMH for the AS1002F(G)-02 is not available.

Inch Size

Tubing size / Applicable model	Applicable tubing					
	01	03	07	09	11	13
	Ø 1/8"	Ø 5/32"	Ø 1/4"	Ø 5/16"	Ø 3/8"	Ø 1/2"
AS1002FS(G)-□A	**TMH-01J**	**TMH-03J**	**TMH-07J**			
AS2002FS(G)-□A						
AS2052FS(G)-□A			**TMH-07**	**TMH-09**		
AS3002FS(G)-□A					**TMH-10**	
AS4002FS(G)-□A						**TMH-13**

Dimensions

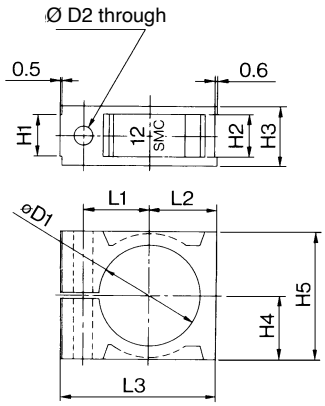

Part no.		Ø D1	Ø D2	H1	H2	H3	H4	H5	L1	L2	L3	Symbol
Metric size	Inch size											
TMH-23J	**TMH-01J**	8.5	3.3	4.5	4.6	7.5	6	12	7.2	6.6	18	1/8J
TMH-04J	**TMH-03J**	9.4										4 5/32J
TMH-06J	–	11.7	3.3	6.3	6.4	9.3	7.7	15.4	8.5	8.3	21	6J
–	**TMH-07J**	12.1										1/4J
TMH-06	–	13.1	4.3	7.1	7.2	11.1	10	20	11	10.6	26.5	6
–	**TMH-07**	13.5										1/4
TMH-08	**TMH-09**	15.5										8 5/16
TMH-10	–	18.8	4.3	9.5	9.6	13.5	14	28	14.2	14.6	34	10
TMH-12	–	21.2										12
–	**TMH-13**	22										1/2

⚠ Safety Instructions

These safety instructions are intended to prevent hazardous situations and/or equipment damage. These instructions indicate the level of potential hazard with the labels of **"Caution," "Warning"** or **"Danger."** They are all important notes for safety and must be followed in addition to International Standards (ISO/IEC) [1], and other safety regulations.

⚠ **Danger:**	**Danger** indicates a hazard with a high level of risk which, if not avoided, will result in death or serious injury.
⚠ **Warning:**	**Warning** indicates a hazard with a medium level of risk which, if not avoided, could result in death or serious injury.
⚠ **Caution:**	**Caution** indicates a hazard with a low level of risk which, if not avoided, could result in minor or moderate injury.

1) ISO 4414: Pneumatic fluid power – General rules and safety requirements for systems and their components.
ISO 4413: Hydraulic fluid power – General rules and safety requirements for systems and their components.
IEC 60204-1: Safety of machinery – Electrical equipment of machines. (Part 1: General requirements)
ISO 10218-1: Robots and robotic devices - Safety requirements for industrial robots - Part 1: Robots.
etc.

⚠ Warning

1. **The compatibility of the product is the responsibility of the person who designs the equipment or decides its specifications.**
   Since the product specified here is used under various operating conditions, its compatibility with specific equipment must be decided by the person who designs the equipment or decides its specifications based on necessary analysis and test results. The expected performance and safety assurance of the equipment will be the responsibility of the person who has determined its compatibility with the product. This person should also continuously review all specifications of the product referring to its latest catalogue information, with a view to giving due consideration to any possibility of equipment failure when configuring the equipment.

2. **Only personnel with appropriate training should operate machinery and equipment.**
   The product specified here may become unsafe if handled incorrectly. The assembly, operation and maintenance of machines or equipment including our products must be performed by an operator who is appropriately trained and experienced.

3. **Do not service or attempt to remove product and machinery/ equipment until safety is confirmed.**
   1. The inspection and maintenance of machinery/equipment should only be performed after measures to prevent falling or runaway of the driven objects have been confirmed.
   2. When the product is to be removed, confirm that the safety measures as mentioned above are implemented and the power from any appropriate source is cut, and read and understand the specific product precautions of all relevant products carefully.
   3. Before machinery/equipment is restarted, take measures to prevent unexpected operation and malfunction.

4. **Our products cannot be used beyond their specifications.**
   Our products are not developed, designed, and manufactured to be used under the following conditions or environments.
   Use under such conditions or environments is not covered.
   1. Conditions and environments outside of the given specifications, or use outdoors or in a place exposed to direct sunlight.
   2. Use for nuclear power, railways, aviation, space equipment, ships, vehicles, military application, equipment affecting human life, body, and property, fuel equipment, entertainment equipment, emergency shut-off circuits, press clutches, brake circuits, safety equipment, etc., and use for applications that do not conform to standard specifications such as catalogues and operation manuals.
   3. Use for interlock circuits, except for use with double interlock such as installing a mechanical protection function in case of failure. Please periodically inspect the product to confirm that the product is operating properly.

⚠ Caution

We develop, design, and manufacture our products to be used for automatic control equipment, and provide them for peaceful use in manufacturing industries.
Use in non-manufacturing industries is not covered.
Products we manufacture and sell cannot be used for the purpose of transactions or certification specified in the Measurement Act.
The new Measurement Act prohibits use of any unit other than SI units in Japan.

Limited warranty and Disclaimer/Compliance Requirements

The product used is subject to the following "Limited warranty and Disclaimer" and "Compliance Requirements".Read and accept them before using the product.

Limited warranty and Disclaimer

1. The warranty period of the product is 1 year in service or 1.5 years after the product is delivered, whichever is first. [2] Also, the product may have specified durability, running distance or replacement parts. Please consult your nearest sales branch.
2. For any failure or damage reported within the warranty period which is clearly our responsibility, a replacement product or necessary parts will be provided. This limited warranty applies only to our product independently, and not to any other damage incurred due to the failure of the product.
3. Prior to using SMC products, please read and understand the warranty terms and disclaimers noted in the specified catalogue for the particular products.

2) Vacuum pads are excluded from this 1 year warranty.
A vacuum pad is a consumable part, so it is warranted for a year after it is delivered. Also, even within the warranty period, the wear of a product due to the use of the vacuum pad or failure due to the deterioration of rubber material are not covered by the limited warranty.

Compliance Requirements

1. The use of SMC products with production equipment for the manufacture of weapons of mass destruction (WMD) or any other weapon is strictly prohibited.
2. The exports of SMC products or technology from one country to another are governed by the relevant security laws and regulations of the countries involved in the transaction. Prior to the shipment of a SMC product to another country, assure that all local rules governing that export are known and followed.

Revision History

Edition B	- A panel mount type has been added. - The number of pages has been increased from 12 to 16.	CU

SMC Corporation (Europe)

Austria	+43 (0)2262622800	www.smc.at	office@smc.at
Belgium	+32 (0)33551464	www.smc.be	info@smc.be
Bulgaria	+359 (0)2807670	www.smc.bg	office@smc.bg
Croatia	+385 (0)13707288	www.smc.hr	office@smc.hr
Czech Republic	+420 541424611	www.smc.cz	office@smc.cz
Denmark	+45 70252900	www.smcdk.com	smc@smcdk.com
Estonia	+372 651 0370	www.smcee.ee	info@smcee.ee
Finland	+358 207513513	www.smc.fi	smcfi@smc.fi
France	+33 (0)164761000	www.smc-france.fr	supportclient@smc-france.fr
Germany	+49 (0)61034020	www.smc.de	info@smc.de
Greece	+30 210 2717265	www.smchellas.gr	sales@smchellas.gr
Hungary	+36 23513000	www.smc.hu	office@smc.hu
Ireland	+353 (0)14039000	www.smcautomation.ie	sales@smcautomation.ie
Italy	+39 03990691	www.smcitalia.it	mailbox@smcitalia.it
Latvia	+371 67817700	www.smc.lv	info@smc.lv
Lithuania	+370 5 2308118	www.smclt.lt	info@smclt.lt
Netherlands	+31 (0)205318888	www.smc.nl	info@smc.nl
Norway	+47 67129020	www.smc-norge.no	post@smc-norge.no
Poland	+48 222119600	www.smc.pl	sales@smc.pl
Portugal	+351 214724500	www.smc.eu	apoioclientept@smc.smces.es
Romania	+40 213205111	www.smcromania.ro	smcromania@smcromania.ro
Russia	+7 (812)3036600	www.smc.eu	sales@smcru.com
Slovakia	+421 (0)413213212	www.smc.sk	office@smc.sk
Slovenia	+386 (0)73885412	www.smc.si	office@smc.si
Spain	+34 945184100	www.smc.eu	post@smc.smces.es
Sweden	+46 (0)86031240	www.smc.nu	smc@smc.nu
Switzerland	+41 (0)523963131	www.smc.ch	info@smc.ch
Turkey	+90 212 489 0 440	www.smcturkey.com.tr	info@smcturkey.com.tr
UK	+44 (0)845 121 5122	www.smc.uk	sales@smc.uk
South Africa	+27 10 900 1233	www.smcza.co.za	zasales@smcza.co.za

Printing CU 00 Printed in Spain

Specifications are subject to change without prior notice and any obligation on the part of the manufacturer