Air Cylinders

New

RoHS

C85 (ISO 6432) Series: Ø 8, Ø 10, Ø 12, Ø 16, Ø 20, Ø 25
C75 Series: Ø 32, Ø 40

Part numbers set for actuators with mounting brackets, rod end brackets and auto switches available.

Now it is not necessary to order a bracket and the applicable cylinder separately, which can save time.

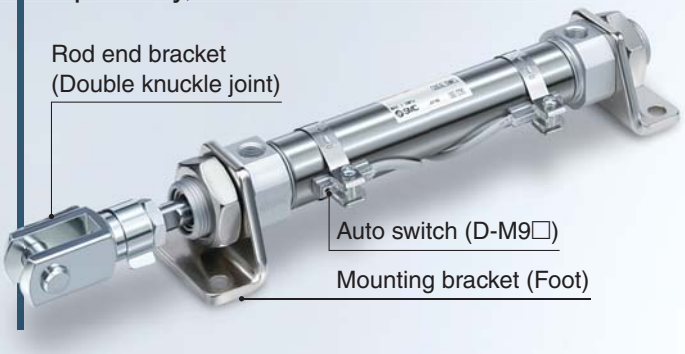

Easy fine adjustment of auto switch position

Fine adjustment of the auto switch position is possible by simply loosening the screw attached to the auto switch.

Transparent switch bracket improves visibility of indicator LED.

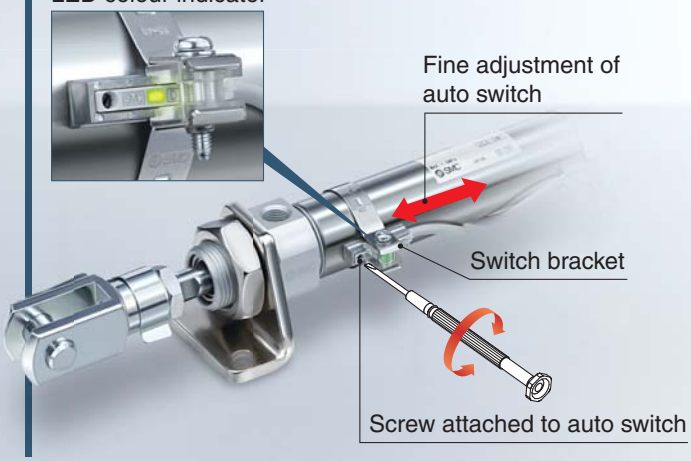

Made to Order

Change of rod end shape: -XA0 to 30
Heat resistant cylinder (-10 to 150 °C): -XB6
Made of stainless steel: -XC6□ etc. are added.

C85/C75 Series

SMC

CAT.EUS20-251A-UK

Part numbers set for actuators with mounting brackets, rod end brackets and auto switches available.

Not necessary to order a bracket for the applicable cylinder separately

Example) **CD85N20-40CJ L W -B- M9BW**

Mounting bracket	
—	None
L	Single foot
M	Double foot
G	Flange
U	Trunnion
N	Clevis

Rod end bracket	
—	None
V	Rod end
W*1	Double knuckle joint

*1 C85 only

Auto switch
Solid state auto switch D-M9□W
Reed auto switch D-A9□

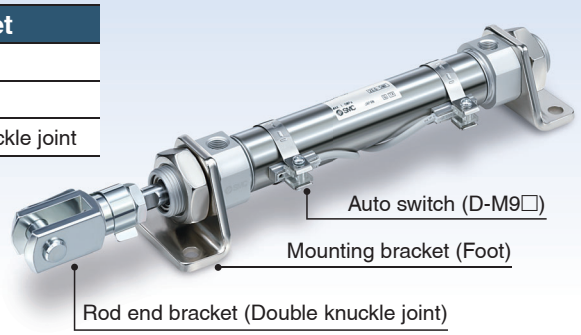

Various mounting bracket options

- Suitable mounting brackets can be selected for the installation condition.
- Improved amount of mounting freedom

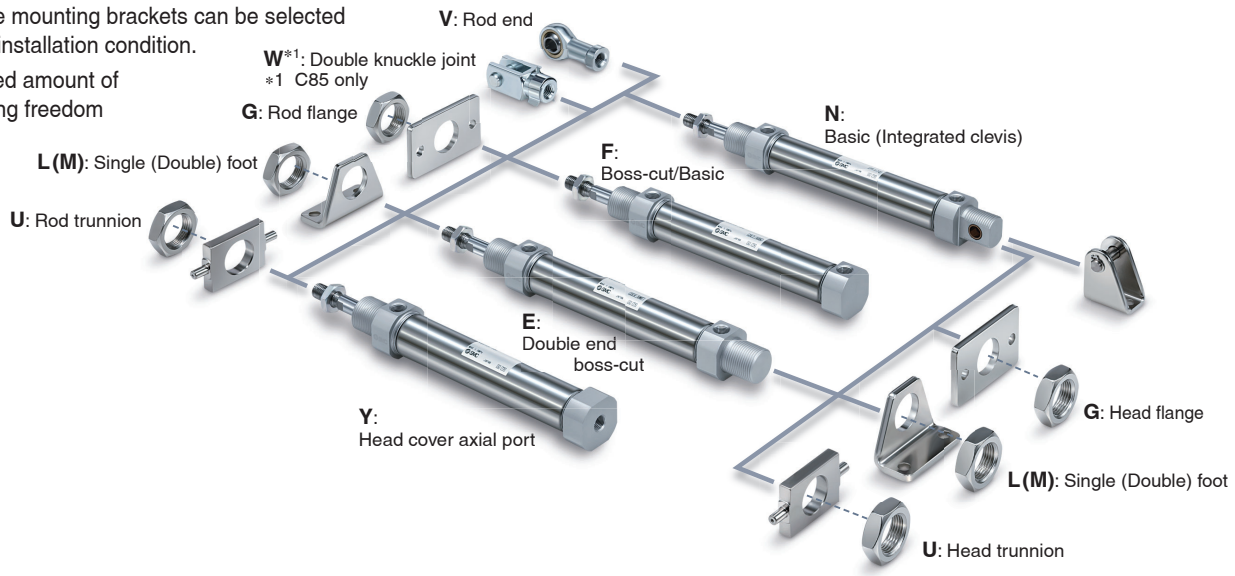

Series Variations

Type	ISO Standards	Series	Action	Bore size [mm] 8	10	12	16	20	25	32	40	Page
Standard	ISO 6432	C85	Double acting, Single rod	●	●	●	●	●	●			2
			Double acting, Double rod	●	●	●	●	●	●			13
			Single acting, Single rod	●	●	●	●	●	●			19
	—	C75	Double acting, Single rod							●	●	56
			Double acting, Double rod							●	●	64
			Single acting, Single rod							●	●	70
Non-rotating rod	ISO 6432	C85	Double acting, Single rod	●	●	●	●	●	●			33
			Single acting, Single rod	●	●	●	●	●	●			38
	—	C75	Double acting, Single rod							●	●	81
			Single acting, Single rod							●	●	86
Direct mount	—	C85 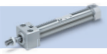	Double acting, Single rod	●	●	●	●	●	●			52
		C75	Double acting, Single rod							●	●	97

Air Cylinder: Standard Double Acting, Single Rod

C85 Series

Ø 8, Ø 10, Ø 12, Ø 16, Ø 20, Ø 25

RoHS

How to Order

Double acting, Single rod

C D 85 N 20 – 40 C J L V – B – M9BW S –

Head cover type

N	Basic (Integrated clevis)
E	Double end boss-cut
F	Boss-cut/Basic
Y	Head cover axial port

Applicable head cover

Action	Head cover type			
	N	E	F	Y
Rubber bumper	●	●	●	●
Air cushion	●*1	—	—	—

*1 Except Ø 8

Bore size

8	8 mm
10	10 mm
12	12 mm
16	16 mm
20	20 mm
25	25 mm

Cylinder stroke [mm]

Refer to the next page for standard strokes.

Built-in magnet

—	None
D	Built-in magnet

Cushion

—	Rubber bumper (Standard)
C	Air cushion

Rod boot (Ø 20, Ø 25 only)

—	Without rod boot
J	Nylon tarpaulin (One end)
K	Heat resistant tarpaulin (One end)

Mounting bracket*1

—	None
L	Single foot
M	Double foot
G	Flange
U	Trunnion
N	Clevis

*1 Refer to Mounting Brackets/Accessories on page 4 for details of mounting brackets.
* Mounting bracket is shipped together with the product.

Applicable mounting bracket

Action	Head cover type	Mounting bracket				
		L	M	G	U	N
Rubber bumper	N	●	●	●	●	●
	E	●	●	●	●	—
	F	●	—	●	●	—
	Y	●	—	●	●	—
Air cushion	N*1	●	●	●	●	●

*1 Except Ø 8

Accessory*1

—	None
V	Rod end
W	Double knuckle joint

*1 Refer to Mounting Brackets/Accessories on page 4 for details of accessories.
* Accessory is shipped together with the product.

Auto switch mounting type*1

A	Rail mounting
B	Band mounting

*1 The symbol is "—" for no magnet.

Number of auto switches

—	2
S	1
n	n

Auto switch

—	Without auto switch

* For applicable auto switches, refer to the table below.
* Auto switches are shipped together with the product.

Made to order

For details, refer to page 3.

Applicable Auto Switches/Refer to the **Auto Switch** Guide for further information.

Type	Special function	Electrical entry	Indicator light	Wiring (Output)	Load voltage DC	Load voltage AC	Auto switch model: Band mounting Perpendicular	Band mounting In-line	Rail mounting Perpendicular	Rail mounting In-line	Lead wire length [m] 0.5 (—)	1 (M)	3 (L)	5 (Z)	None (N)	Pre-wired connector	Applicable load	
Solid state auto switch	—	Grommet	Yes	3-wire (NPN)	5 V, 12 V	—	M9NV	M9N	M9NV	M9N	●	●	●	○	—	○	IC circuit	Relay, PLC
				3-wire (PNP)			M9PV	M9P	M9PV	M9P	●	●	●	○	—	○		
				2-wire	12 V		M9BV	M9B	M9BV	M9B	●	●	●	○	—	○	—	
		Connector					—	H7C	J79C	—	●	—	●	●	●	—		
	Diagnostic indication (2-colour indicator)	Grommet		3-wire (NPN)	5 V, 12 V		M9NWV	M9NW	M9NWV	M9NW	●	●	●	○	—	○	IC circuit	
				3-wire (PNP)			M9PWV	M9PW	M9PWV	M9PW	●	●	●	○	—	○		
				2-wire	12 V		M9BWV	M9BW	M9BWV	M9BW	●	●	●	○	—	○	—	
	Water resistant (2-colour indicator)			3-wire (NPN)	5 V, 12 V		M9NAV*1	M9NA*1	M9NAV*1	M9NA*1	○	○	●	○	—	○	IC circuit	
				3-wire (PNP)			M9PAV*1	M9PA*1	M9PAV*1	M9PA*1	○	○	●	○	—	○		
				2-wire	12 V		M9BAV*1	M9BA*1	M9BAV*1	M9BA*1	○	○	●	○	—	○	—	
	With diagnostic output (2-colour indicator)			4-wire (NPN)	5 V, 12 V		—	H7NF	—	F79F	●	—	●	○	—	○	IC circuit	
Reed auto switch	—	Grommet	Yes	3-wire (NPN equivalent)	5 V	—	A96V	A96	A96V	A96	●	—	●	—	—	—	IC circuit	—
				2-wire	—	200 V	—	—	A72	A72H	●	—	●	—	—	—	—	Relay, PLC
					24 V: 12 V	100 V	A93V*2	A93	A93V*2	A93	●	●	●	●	—	—		
			No			100 V or less	A90V	A90	A90V	A90	●	—	●	—	—	—	IC circuit	
			Yes			—	—	C73C	A73C	—	●	—	●	●	●	—	—	
		Connector	No			24 V or less	—	C80C	A80C	—	●	—	●	●	●	—	IC circuit	
	Diagnostic indication (2-colour indicator)	Grommet	Yes		—	—	—	—	A79W	—	●	—	●	—	—	—	—	

*1 Water resistant type auto switches can be mounted on the above models, but SMC cannot guarantee water resistance. Please contact SMC regarding water resistant types with the above model numbers.
*2 1 m lead wire is only applicable to the D-A93.
* Lead wire length symbols: 0.5 m····· — (Example) M9NW; 1 m····· M (Example) M9NWM; 3 m····· L (Example) M9NWL; 5 m····· Z (Example) M9NWZ; None····· N (Example) H7CN

* Since there are other applicable auto switches than listed above, refer to page 111 for details.
* Solid state auto switches marked with "○" are produced upon receipt of order.
* D-A9□/M9□/A7□/A80□/F7□/J7□ auto switches are shipped together, but not assembled. (For band mounting, only the auto switch mounting brackets are assembled before shipment.)
* When mounting a band on bore size Ø 8, Ø 10, or Ø 12, the D-A9□(V) cannot be mounted.
* When mounting a rail on bore size Ø 8, Ø 10, or Ø 12, the D-A9□(V) and A79W cannot be mounted.
* When mounting a rail on bore size Ø 20 or Ø 25, the D-M9□(V), M9□W(V), and M9□A(V) cannot be mounted.

Specifications

Bore size [mm]		8	10	12	16	20	25
Type		Pneumatic					
Action		Double acting, Single rod					
Fluid		Air					
Proof pressure		1.5 MPa					
Max. operating pressure		1.0 MPa					
Min. operating pressure	**Rubber bumper**	0.1 MPa	0.08 MPa		0.05 MPa		
	Air cushion	—	0.08 MPa		0.05 MPa		
Ambient and fluid temperature		Without auto switch: –20 °C to 80 °C (No freezing)					
		With auto switch: –10 °C to 60 °C (No freezing)					
Lubricant		Not required (Non-lube)					
Stroke length tolerance		$^{+1.0}_{0}$ mm				$^{+1.4}_{0}$ mm	
Piston speed		50 to 1500 mm/s					
Cushion		Rubber bumper					
		—	Air cushion				
Allowable kinetic energy	**Rubber bumper**	0.02 J	0.03 J	0.04 J	0.09 J	0.27 J	0.4 J
	Air cushion	—	0.17 J	0.19 J	0.4 J	0.66 J	0.97 J

Symbol

Double acting, Single rod

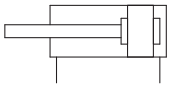

Air cushion

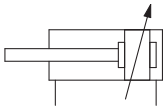

Refer to pages 101 to 111 for cylinders with auto switches.

- Auto Switch Proper Mounting Position (Detection at stroke end) and Mounting Height
- Minimum Stroke for Auto Switch Mounting
- Operating Range
- Auto Switch Mounting Brackets/Part No.

Standard Strokes

Bore size [mm]	Standard stroke [mm]*2*4	Max. stroke*3 [mm]
8*1	10, 25, 40, 50, 80, 100	200
10		400
12	10, 25, 40, 50, 80, 100, 125, 160, 200	
16		
20	10, 25, 40, 50, 80, 100, 125, 160, 200, 250, 300	1000
25		

*1 Not available with air cushion.
*2 Other strokes are available on request.
*3 For exceeding the standard stroke range, it will be available as a special order (-X2018).
*4 The minimum stroke with air cushion is 25 mm.

Made to Order

Made to Order
(For details, refer to pages 115 to 120.)

Symbol	Specifications
-XA	Change of rod end shape*1
-XB6	Heat resistant cylinder (–10 to 150 °C)*2
-XB7	Cold resistant cylinder (-40 to 70 °C)
-XB9	Low speed cylinder (10 to 50 mm/s)
-XC4	With heavy duty scraper
-XC6□	Made of stainless steel

*1 Exclude Ø 8 air cushion.
*2 Rubber bumper Ø 10 to Ø 25 only

Option: Ordering Example of Cylinder Assembly

Cylinder model: CD85N20-50CNW-B-M9BW

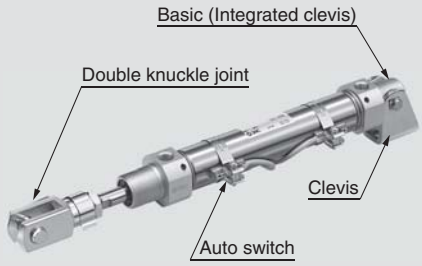

Head cover N: Basic (Integrated clevis)
Mounting bracket N: Clevis
Rod end bracket W: Double knuckle joint
Auto switch D-M9BW: Band mounting, 2 pcs.

* Mounting bracket, double knuckle joint, and auto switch are shipped together with the product.

⚠ Precautions

Be sure to read this before handling the products. Refer to the back cover for safety instructions. For actuator and auto switch precautions, refer to the "Handling Precautions for SMC Products" and the "Operation Manual" on the SMC website: http://www.smc.eu

Mounting Brackets/Accessories

Mounting bracket/ Accessory			Standard (mounted to the body)		Mounting bracket (shipped together)							Accessory (shipped together)	
			Mounting nut	Rod end nut	Mounting nut	Foot	Flange	Trunnion	Clevis pivot bracket	Clevis pin	Pin retaining ring	Rod end	Double knuckle joint
Mounting bracket symbol	L	Single foot	● (1 pc.)	● (1 pc.)	—	● (1 pc.)	—	—	—	—	—	—	—
	M	Double foot	● (1 pc.)	● (1 pc.)	● (1 pc.)	● (2 pcs.)	—	—	—	—	—	—	—
	G	Flange	● (1 pc.)	● (1 pc.)	—	—	● (1 pc.)	—	—	—	—	—	—
	U	Trunnion	● (1 pc.)	● (1 pc.)	—	—	—	● (1 pc.)	—	—	—	—	—
	N	Clevis	● (1 pc.)	● (1 pc.)	—	—	—	—	● (1 pc.)	● (1 pc.)	● (2 pcs.)	—	—
Accessory symbol	V	Rod end	● (1 pc.)	● (1 pc.)	—	—	—	—	—	—	—	● (1 pc.)	—
	W	Double knuckle joint	● (1 pc.)	● (1 pc.)	—	—	—	—	—	—	—	—	● (1 pc.)

Mounting Bracket/Accessory Part Nos.

Mounting bracket/Accessory		Bore size [mm]						Contents
		8	10	12	16	20	25	
Mounting bracket	Rod end nut	C85NT10		C85NT16		C85NT20	C85NT25	1 rod end nut
	Mounting nut	C85SN10		C85SN16		C85SN25		1 mounting nut
	Foot (1 pc.)	C85L10A		C85L16A		C85L25A		1 foot
	Foot (2 pcs. with 1 mounting nut)	C85L10B		C85L16B		C85L25B		2 foots, 1 mounting nut
	Foot (1 pc. with 1 mounting nut)	C85L10C		C85L16C		C85L25C		1 foot, 1 mounting nut
	Flange	C85F10		C85F16		C85F25		1 flange
	Trunnion	C85T10		C85T16		C85T25		1 trunnion
	Clevis	C85C10		C85C16		C85C25		1 clevis pivot bracket, 1 clevis pin, 2 pin retaining rings
Accessory	Rod end	KJ4D		KJ6D		KJ8D	KJ10D	1 rod end
	Double knuckle joint	GKM4-8		GKM6-12		GKM8-16	GKM10-20	1 double knuckle joint
	Floating joint	JA10-4-070		JA15-6-100		JA20-8-125	JA30-10-125	1 floating joint

∗ Refer to page 12 for dimensions of accessories.

Replacement Parts: For Standard Type

Bore size [mm]	Part no.	Note
20	C85A-20PS	Every set includes: 1 rod seal 1 flat washer 1 retaining ring
25	C85A-25PS	

∗ When replacing the seals, use **grease (GR-S-010: ordered separately)** on the sliding parts.

Weights

[g]

Bore size [mm]			8	10	12	16	20	25
Basic weight	Without magnet	C85N	37	38 (44)	77 (84)	89 (95)	179 (176)	244 (241)
		C85E	39	40	81	93	185	249
		C85F	35	37	71	79	164	227
		C85Y	35	37	72	79	165	228
	With magnet	CD85N	37	39 (44)	78 (84)	90 (96)	183 (179)	248 (245)
		CD85E	39	41	81	93	188	253
		CD85F	35	37	72	80	168	231
		CD85Y	36	37	72	80	168	232
Additional weight per 10 mm of stroke			2.1	2.3	4.1	5.1	8.1	11.3
Mounting bracket	Foot (1 pc.)	C85L□A	20		40		95	
	Foot (2 pcs. with 1 mounting nut)	C85L□B	55		105		210	
	Flange	C85F□	12		25		90	
	Trunnion	C85T□	20		50		75	
	Clevis	C85C□	20		40		85	
Accessory	Rod end	KJ□D	17		25		45	70
	Double knuckle joint	GKM□-□	10		20		50	100
	Floating joint	JA□-□-□	10		20		50	70

( ): For air cushion

Calculation example: **C85N20-50NV**
- Basic weight ····· 179 g (Ø 20)
- Additional weight ··· 8.1 g (at 10 mm stroke)
- Cylinder stroke ····· 50 mm
- Mounting bracket: Clevis ··· 85 g
- Accessory: Rod end ····· 45 g

179 + 8.1 x 50/10 + 85 + 45 ≈ **350 g**

Stroke Selection

Relationship between cylinder size and maximum stroke

The below table shows the applicable maximum stroke (in cm units), found by calculation assuming the case where the force generated by the cylinder itself acts as buckling force on the piston rod, or piston rod and cylinder tube. Therefore, it is possible to find the applicable maximum stroke for each cylinder size using the relationship between the size of the operating pressure and the cylinder support type, regardless of the load ratio.

[Reference] If it is stopped with the external stopper on the cylinder extension side, even with a light load, the maximum generated force of the cylinder will act on the cylinder itself.

[cm]

Mounting			Nominal symbol	Operating pressure [MPa]	Applicable maximum stroke according to buckling strength					
Support bracket nominal symbol and schematic diagram					C85					
					8	10	12	16	20	25
Foot: M	Rod flange: G	Head flange: G	M	0.3	24	18	36	26	38	48
			G (Rod side)	0.5	18	14	27	19	29	36
				0.7	14	11	22	16	23	30
			G (Head side)	0.3	9	6	15	10	15	20
				0.5	6	4	10	6	10	14
				0.7	4	3	8	4	8	11
Clevis: N	Rod trunnion: U		N	0.3	22	17	35	24	36	46
				0.5	16	12	26	18	27	34
				0.7	13	10	21	14	22	28
Head trunnion: U			U (Rod side)	0.3	(40)*1	(40)*1	(40)*1	(40)*1	80	(100)*1
				0.5	38	30	(40)*1	(40)*1	61	77
				0.7	32	25	(40)*1	35	51	64
			U (Head side)	0.3	22	17	35	24	37	47
				0.5	16	12	26	18	27	35
				0.7	13	10	21	14	22	28
Foot: M	Rod flange: G	Head flange: G	M	0.3	(40)*1	(40)*1	(40)*1	(40)*1	(100)*1	(100)*1
			G (Rod side)	0.5	(40)*1	(40)*1	(40)*1	(40)*1	89	(100)*1
				0.7	(40)*1	36	(40)*1	(40)*1	74	93
			G (Head side)	0.3	33	26	(40)*1	37	54	69
				0.5	25	19	39	27	41	52
				0.7	20	15	32	22	33	43
Foot: M	Rod flange: G	Head flange: G	M	0.3	(40)*1	(40)*1	(40)*1	(40)*1	(100)*1	(100)*1
			G (Rod side)	0.5	(40)*1	(40)*1	(40)*1	(40)*1	(100)*1	(100)*1
				0.7	(40)*1	(40)*1	(40)*1	(40)*1	(100)*1	(100)*1
			G (Head side)	0.3	(40)*1	38	(40)*1	(40)*1	79	(100)*1
				0.5	37	29	(40)*1	(40)*1	60	76
				0.7	30	23	(40)*1	34	50	63

*1 The data in ( ) are limited by max. stroke length.

The maximum stroke at which the cylinder can be operated under a lateral load

The region that does not exceed the bold solid line represents the allowable lateral load in relation to the cylinder of a given stroke length. In the graph, the range of the broken line shows that the long stroke limit has been exceeded. In this region, as a rule, operate the cylinder by providing a guide along the direction of movement.

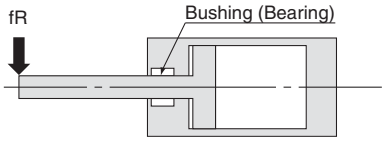

C85 Series: Ø 8, Ø 10, Ø 12, Ø 16

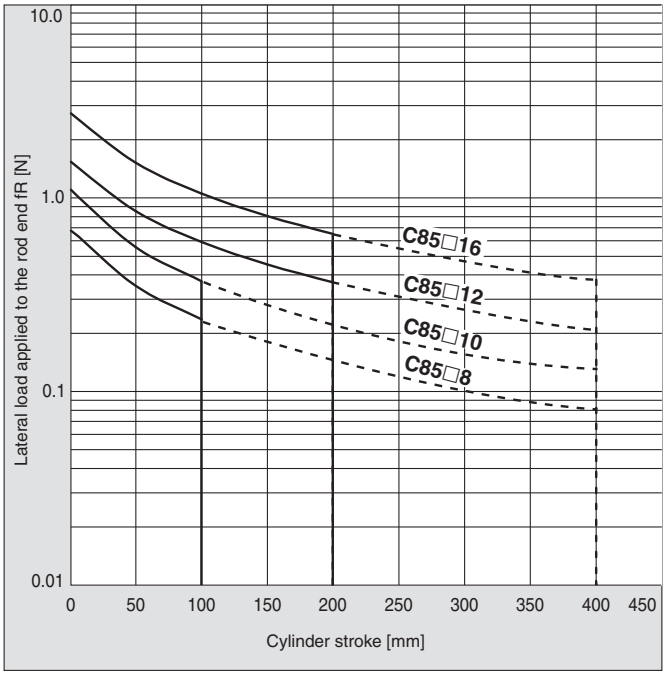

C85 Series: Ø 20, Ø 25

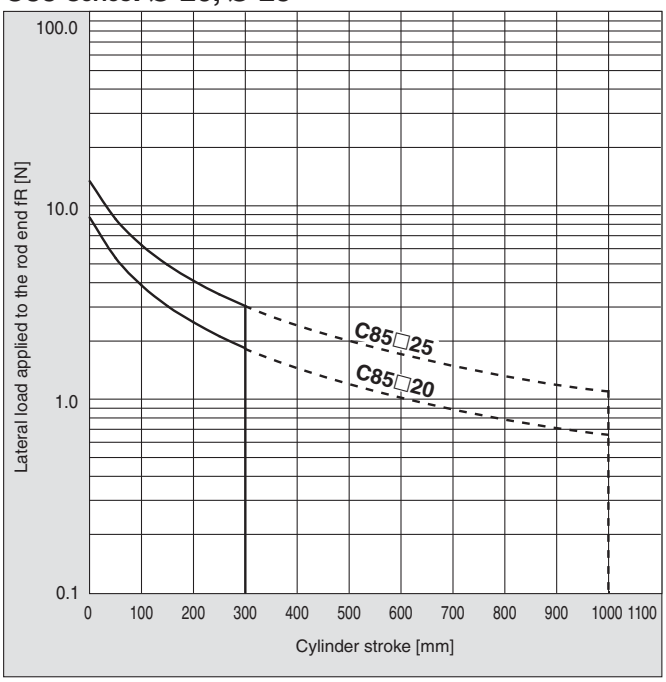

Dimensions

Basic (Integrated clevis)

Rubber bumper: C□85N Bore size – Stroke – □

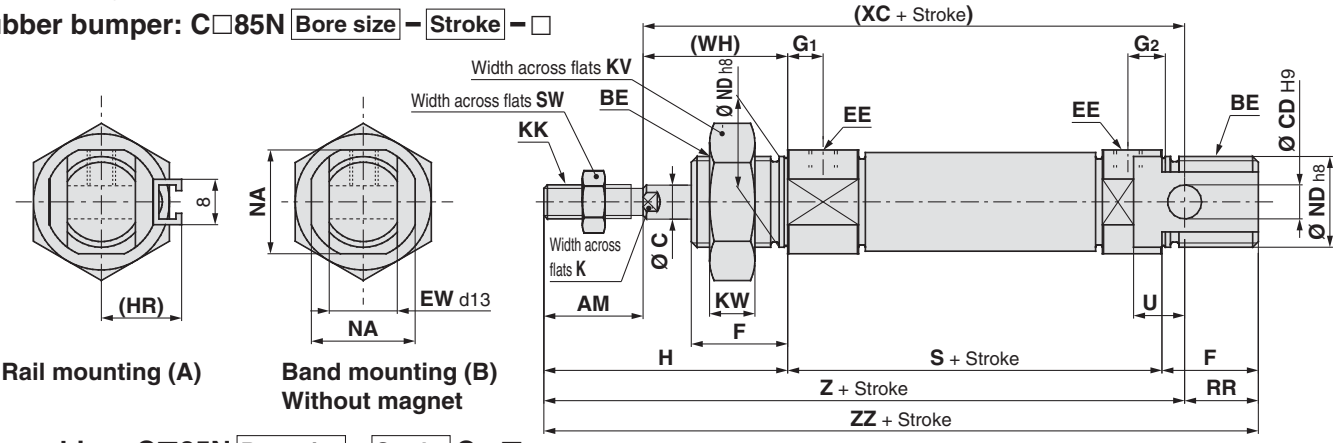

Rail mounting (A)

Band mounting (B)
Without magnet

Air cushion: C□85N Bore size – Stroke C – □

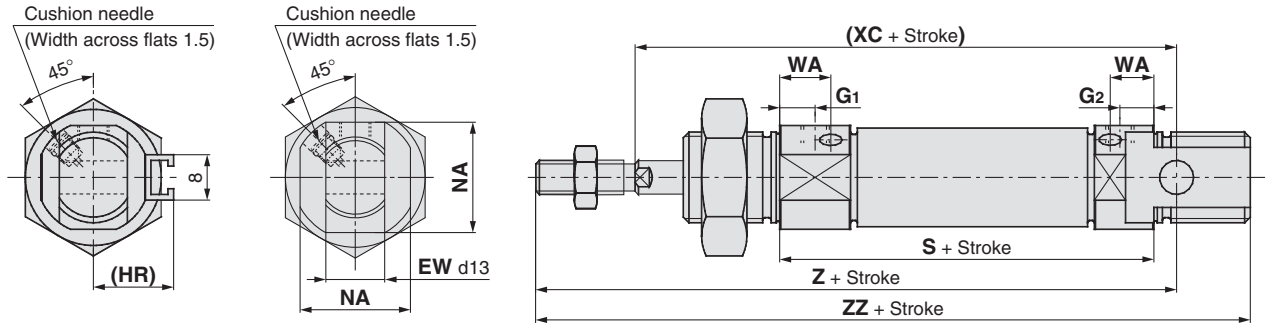

Rail mounting (A)

Band mounting (B)
Without magnet

With rod boot

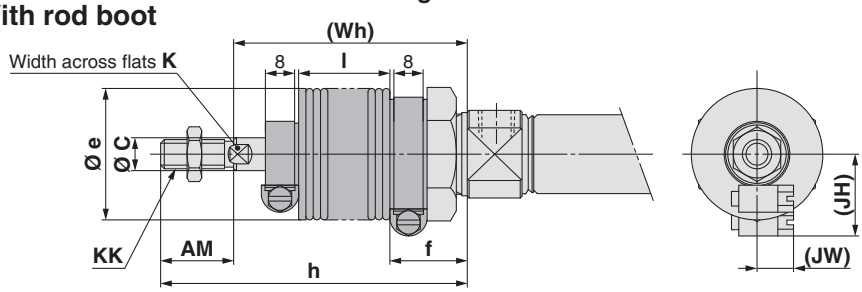

Dimensions

[mm]

Bore size	AM	BE	C	CD	EE	EW	F	G_1	G_2	H	(HR)	K	KK	KV	KW	NA	ND	RR	S	SW	U	WA	(WH)	(XC)	Z	ZZ
8	12	M12 x 1.25	4	4	M5 x 0.8	8	12	7	5	28	13.4	—	M4 x 0.7	19	6	15	12	10	46	7	6	—	16	64	76	86
10	12	M12 x 1.25	4	4	M5 x 0.8	8	12	7 (5.5)	5 (5.5)	28	14.2	—	M4 x 0.7	19	6	15	12	10	46 (53)	7	6	10.5	16	64 (71)	76 (83)	86 (93)
12	16	M16 x 1.5	6	6	M5 x 0.8	12	17	8 (5.5)	6 (5.5)	38	14.2	5	M6 x 1	24	8	18.3	16	14	50 (54)	10	9	9.5	22	75 (79)	91 (95)	105 (109)
16	16	M16 x 1.5	6	6	M5 x 0.8	12	17	8 (5.5)	6 (5.5)	38	14.2	5	M6 x 1	24	8	18.3	16	13	56	10	9	9.5	22	82	98	111
20	20	M22 x 1.5	8	8	G1/8	16	20	8	8	44	17	6	M8 x 1.25	32	11	24	22	11	62	13	12	13	24	95	115	126
25	22	M22 x 1.5	10	8	G1/8	16	22	8	8	50	20	8	M10 x 1.25	32	11	30	22	11	65	17	12	13	28	104	126	137

( ): For air cushion

With Rod Boot

[mm]

Bore size \ Stroke \ Item	AM	C	e	f	K	KK	h						
							1 to 50	51 to 100	101 to 150	151 to 200	201 to 300	301 to 400	401 to 500
20	20	8	36	22	6	M8 x 1.25	71	84	96	109	134	159	—
25	22	10	36	22	8	M10 x 1.25	74	87	99	112	137	162	187

Bore size \ Stroke \ Item	l							(JH)	(JW)	(Wh)						
	1 to 50	51 to 100	101 to 150	151 to 200	201 to 300	301 to 400	401 to 500	Reference	Reference	1 to 50	51 to 100	101 to 150	151 to 200	201 to 300	301 to 400	401 to 500
20	12.5	25	37.5	50	75	100	—	23.5	10.5	51	64	76	89	114	139	—
25	12.5	25	37.5	50	75	100	125	23.5	10.5	52	65	77	90	115	140	165

Refer to page 12 of Standard Type Single Rod for details of accessories (rod end, double knuckle joint, floating joint).

Dimensions

Double end boss-cut
Rubber bumper: C□85E Bore size – Stroke – □

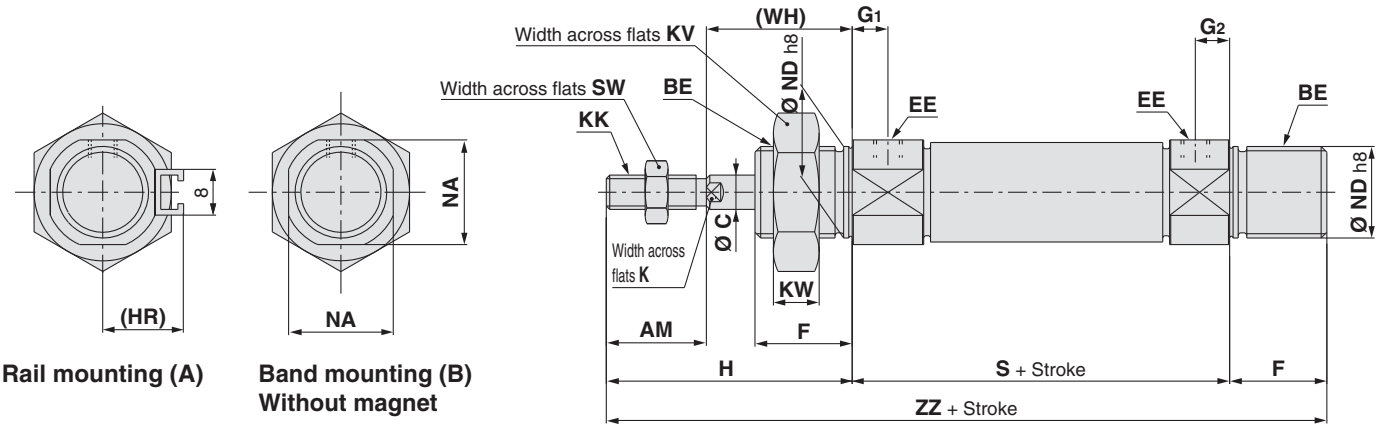

Rail mounting (A)

Band mounting (B)
Without magnet

With rod boot

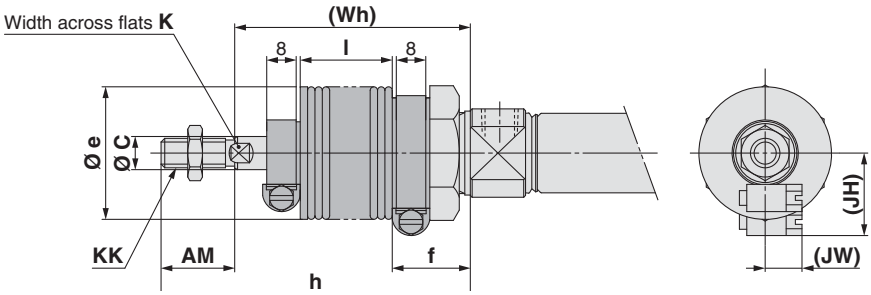

Dimensions

[mm]

Bore size	AM	BE	C	EE	F	G_1	G_2	H	(HR)	K	KK	KV	KW	NA	ND	S	SW	(WH)	ZZ
8	12	M12 x 1.25	4	M5 x 0.8	12	7	5	28	13.4	—	M4 x 0.7	19	6	15	12	46	7	16	86
10	12	M12 x 1.25	4	M5 x 0.8	12	7	5	28	14.2	—	M4 x 0.7	19	6	15	12	46	7	16	86
12	16	M16 x 1.5	6	M5 x 0.8	17	8	6	38	14.2	5	M6 x 1	24	8	18.3	16	50	10	22	105
16	16	M16 x 1.5	6	M5 x 0.8	17	8	6	38	14.2	5	M6 x 1	24	8	18.3	16	56	10	22	111
20	20	M22 x 1.5	8	G1/8	20	8	8	44	17	6	M8 x 1.25	32	11	24	22	62	13	24	126
25	22	M22 x 1.5	10	G1/8	22	8	8	50	20	8	M10 x 1.25	32	11	30	22	65	17	28	137

With Rod Boot

[mm]

Bore size \ Stroke \ Item	AM	C	e	f	K	KK	h						
							1 to 50	51 to 100	101 to 150	151 to 200	201 to 300	301 to 400	401 to 500
20	20	8	36	22	6	M8 x 1.25	71	84	96	109	134	159	—
25	22	10	36	22	8	M10 x 1.25	74	87	99	112	137	162	187

Bore size \ Stroke \ Item	l							(JH)	(JW)	(Wh)						
	1 to 50	51 to 100	101 to 150	151 to 200	201 to 300	301 to 400	401 to 500	Reference	Reference	1 to 50	51 to 100	101 to 150	151 to 200	201 to 300	301 to 400	401 to 500
20	12.5	25	37.5	50	75	100	—	23.5	10.5	51	64	76	89	114	139	—
25	12.5	25	37.5	50	75	100	125	23.5	10.5	52	65	77	90	115	140	165

Refer to page 12 of Standard Type Single Rod for details of accessories (rod end, double knuckle joint, floating joint).

Dimensions

Boss-cut/Basic, Head cover axial port

Rubber bumper: C□85F/Y Bore size – Stroke – □

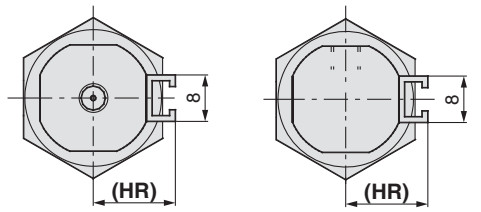

Head cover axial port

Boss-cut/Basic

Rail mounting (A)

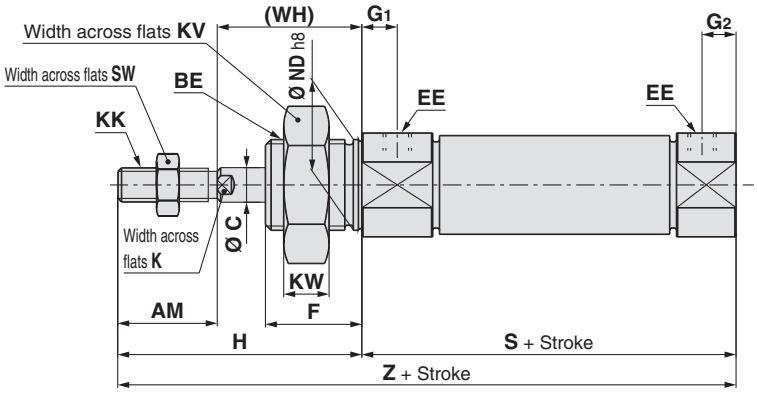

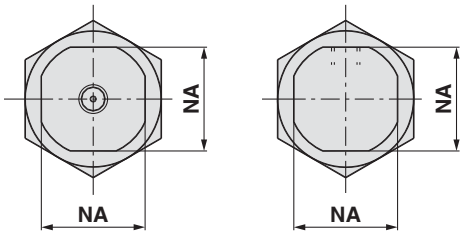

Head cover axial port

Boss-cut/Basic

Band mounting (B)
Without magnet

With rod boot

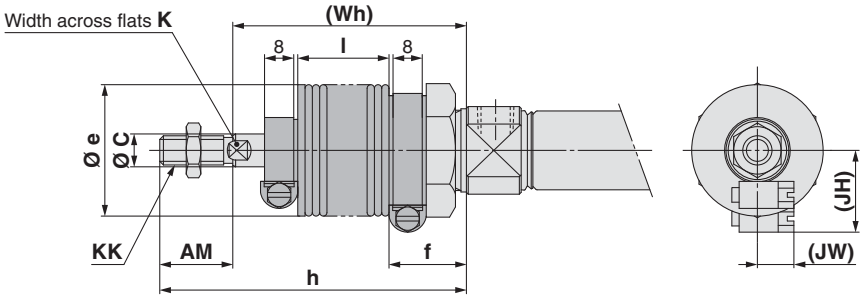

Dimensions

[mm]

Bore size	AM	BE	C	EE	F	G_1	G_2	H	(HR)	K	KK	KV	KW	NA	ND	S	SW	(WH)	Z
8	12	M12 x 1.25	4	M5 x 0.8	12	7	5	28	13.4	—	M4 x 0.7	19	6	15	12	46	7	16	74
10	12	M12 x 1.25	4	M5 x 0.8	12	7	5	28	14.2	—	M4 x 0.7	19	6	15	12	46	7	16	74
12	16	M16 x 1.5	6	M5 x 0.8	17	8	6	38	14.2	5	M6 x 1	24	8	18.3	16	50	10	22	88
16	16	M16 x 1.5	6	M5 x 0.8	17	8	6	38	14.2	5	M6 x 1	24	8	18.3	16	50	10	22	88
20	20	M22 x 1.5	8	G1/8	20	8	8	44	17	6	M8 x 1.25	32	11	24	22	62	13	24	106
25	22	M22 x 1.5	10	G1/8	22	8	8	50	20	8	M10 x 1.25	32	11	30	22	65	17	28	115

With Rod Boot

[mm]

Bore size \ Item / Stroke	AM	C	e	f	K	KK	h						
							1 to 50	51 to 100	101 to 150	151 to 200	201 to 300	301 to 400	401 to 500
20	20	8	36	22	6	M8 x 1.25	71	84	96	109	134	159	—
25	22	10	36	22	8	M10 x 1.25	74	87	99	112	137	162	187

Bore size \ Item / Stroke	l							(JH)	(JW)	(Wh)						
	1 to 50	51 to 100	101 to 150	151 to 200	201 to 300	301 to 400	401 to 500	Reference	Reference	1 to 50	51 to 100	101 to 150	151 to 200	201 to 300	301 to 400	401 to 500
20	12.5	25	37.5	50	75	100	—	23.5	10.5	51	64	76	89	114	139	—
25	12.5	25	37.5	50	75	100	125	23.5	10.5	52	65	77	90	115	140	165

Refer to page 12 of Standard Type Single Rod for details of accessories (rod end, double knuckle joint, floating joint).

Dimensions

Bracket is shipped together with the product.

Single foot: C□85N□−□L
(With mounting bracket)

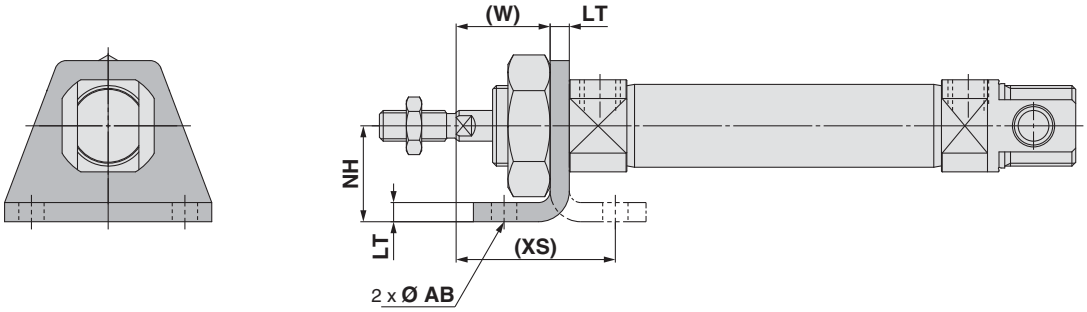

Double foot: C□85N□−□M
(With mounting bracket)

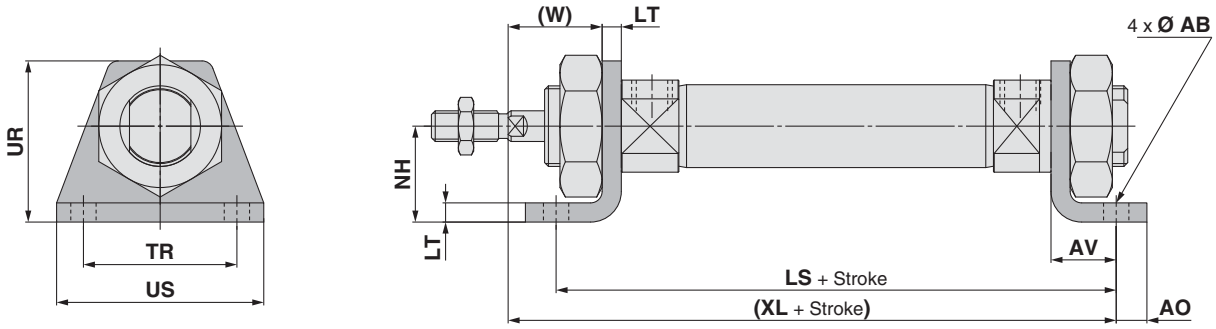

[mm]

Bore size	AB	AO	AV	LS	LT	NH	TR$_{JS14}$	UR	US	(W)	(XL)	(XS)
8	4.5	5	11	68	3.2	16	25	26	35	12.8	73	23.8
10	4.5	5	11	68 (75)	3.2	16	25	26	35	12.8	73 (80)	23.8
12	5.5	6	14	78 (82)	4	20	32	33	42	18	86 (90)	32
16	5.5	6	14	84	4	20	32	33	42	18	92	32
20	6.6	8	17	96	5	25	40	42	54	19	103	36
25	6.6	8	17	99	5	25	40	42	54	23	110	40

( ): For air cushion

Refer to page 12 of Standard Type Single Rod for details of accessories (rod end, double knuckle joint, floating joint).

Dimensions

Bracket is shipped together with the product.

Rod flange: C□85N□−□G (With mounting bracket)

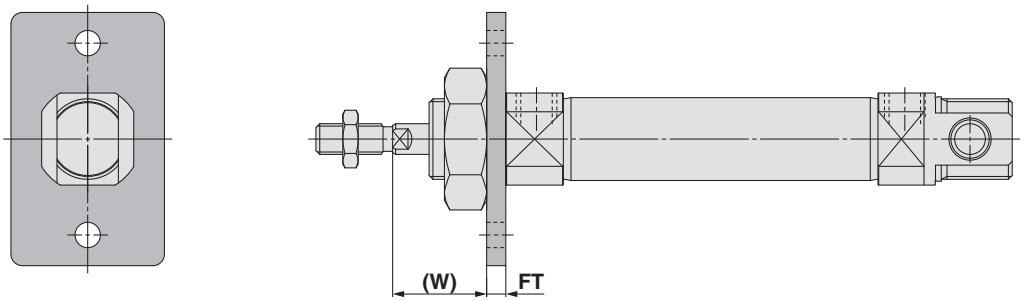

Head flange: C□85N□−□G (With mounting bracket)

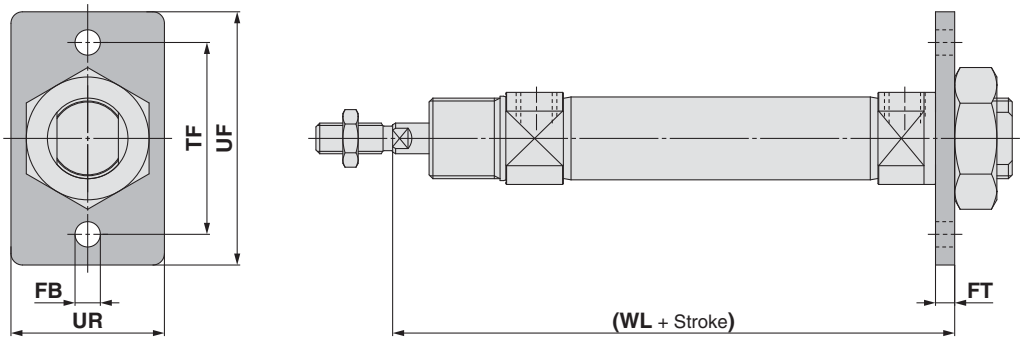

[mm]

Bore size	FB$_{H13}$	FT	TF	UF	UR	(W)	(WL)
8	4.5	3.2	30	40	22	12.8	65.2
10	4.5	3.2	30	40	22	12.8	65.2 (72.2)
12	5.5	4	40	52	30	18	76 (80)
16	5.5	4	40	52	30	18	82
20	6.6	5	50	66	40	19	91
25	6.6	5	50	66	40	23	98

( ): For air cushion

Refer to page 12 of Standard Type Single Rod for details of accessories (rod end, double knuckle joint, floating joint).

Dimensions

Bracket is shipped together with the product.

Rod trunnion: C□85N□−□U (With mounting bracket)

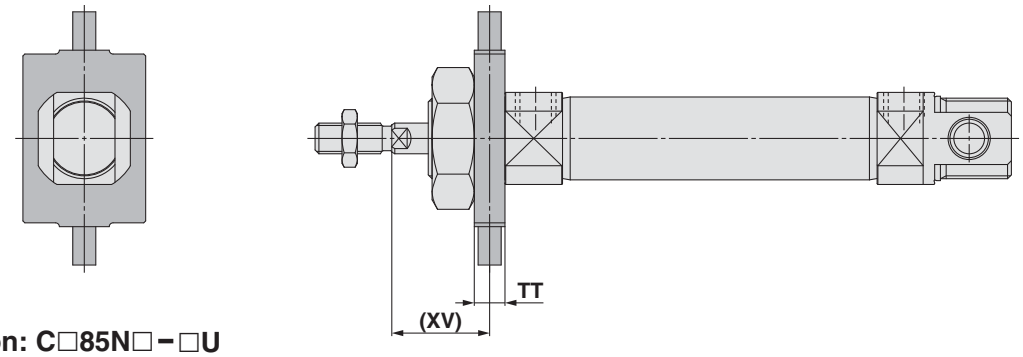

Head trunnion: C□85N□−□U (With mounting bracket)

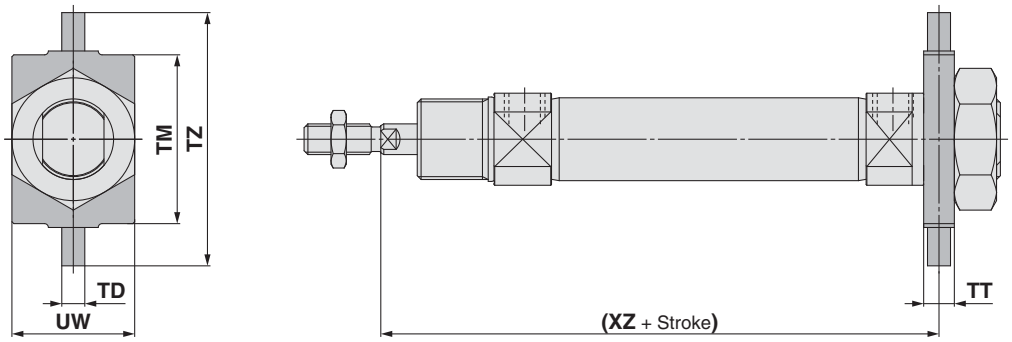

[mm]

Bore size	TD$_{e8}$	TM	TT	TZ	UW	(XV)	(XZ)
8	4	26	6	38	20	13	65
10	4	26	6	38	20	13	65 (72)
12	6	38	8	58	25	18	76 (80)
16	6	38	8	58	25	18	82
20	6	46	8	66	32	20	90
25	6	46	8	66	32	24	97

( ): For air cushion

Clevis: C□85N□−□N (With mounting bracket)

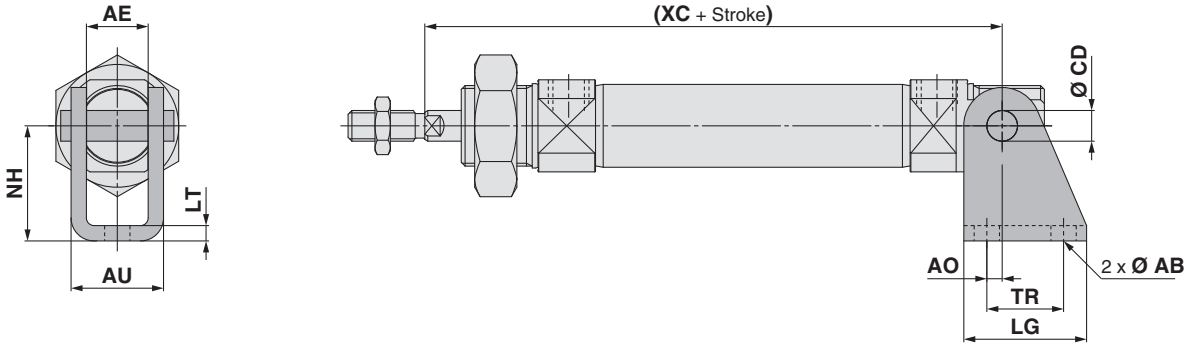

[mm]

Bore size	AB	AE	AO	AU	CD$_{H9}$	LG	LT	NH	TR	(XC)
8	4.5	8.1	1.5	13.1	4	20	2.5	24	12.5	64
10	4.5	8.1	1.5	13.1	4	20	2.5	24	12.5	64 (71)
12	5.5	12.1	2	18.5	6	25	3.2	27	15	75 (79)
16	5.5	12.1	2	18.5	6	25	3.2	27	15	82
20	6.6	16.1	4	24.1	8	32	4	30	20	95
25	6.6	16.1	4	24.1	8	32	4	30	20	104

( ): For air cushion

Refer to page 12 of Standard Type Single Rod for details of accessories (rod end, double knuckle joint, floating joint).

Dimensions of Accessories

Rod End

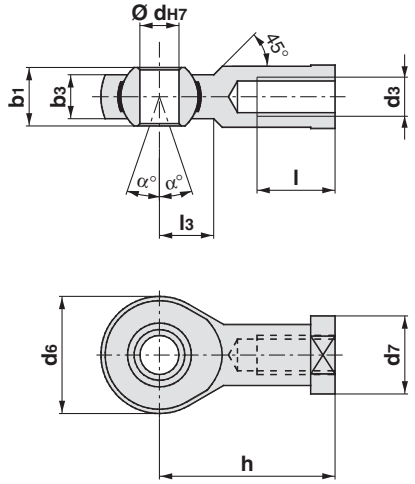

[mm]

Bore size	Part no.	b_1	b_3	d_{H7}	d_6	d_7	h	l	l_3	d_3	α°
8	**KJ4D**	8	6.0	5	18	11	27	10	10	M4 x 0.7	13
10	**KJ4D**	8	6.0	5	18	11	27	10	10	M4 x 0.7	13
12	**KJ6D**	9	6.75	6	20	13	30	12	11	M6 x 1	13
16	**KJ6D**	9	6.75	6	20	13	30	12	11	M6 x 1	13
20	**KJ8D**	12	9	8	24	16	36	16	13	M8 x 1.25	14
25	**KJ10D**	14	10.5	10	28	19	43	20	15	M10 x 1.25	13

Double Knuckle Joint

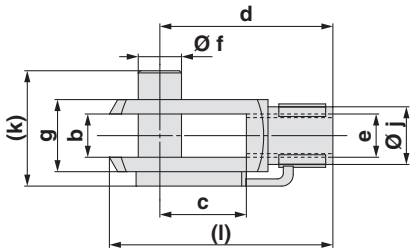

[mm]

Bore size	Part no.	b	c	d	f	g	j	k	e	l
8	**GKM4-8**	4	8	16	4	8	8	11	M4 x 0.7	21
10	**GKM4-8**	4	8	16	4	8	8	11	M4 x 0.7	21
12	**GKM6-12**	6	12	24	6	12	10	18	M6 x 1	31
16	**GKM6-12**	6	12	24	6	12	10	18	M6 x 1	31
20	**GKM8-16**	8	16	32	8	16	14	23	M8 x 1.25	42
25	**GKM10-20**	10	20	40	10	20	18	27	M10 x 1.25	52

Floating Joint: JA

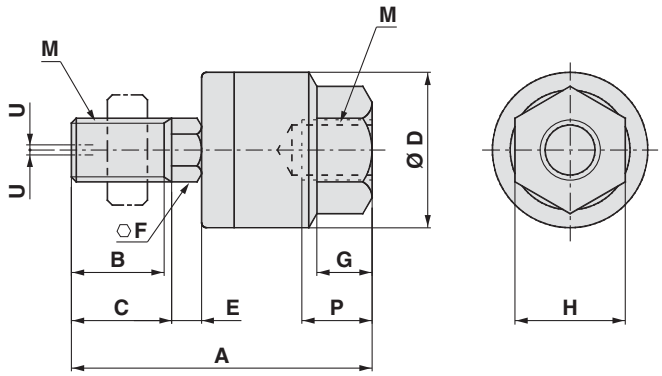

In the case of dimension without C

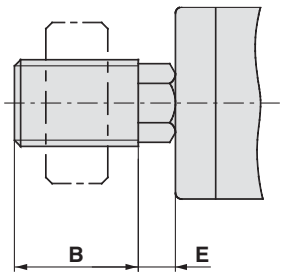

[mm]

Bore size	Part no.	M		A	B	C	D	E	F	G	H	Max. screw-in depth **P**	Allowable eccentricity **U**	Max. operating tension and compression power [kN]
		Nominal thread dia.	Pitch											
8, 10	**JA10-4-070**	4	0.7	26	9	10	12	1.5	4	4	7	5.5	0.5	0.054
12, 16	**JA15-6-100**	6	1	34.5	12.5	14	16	2	6	5	10	7	0.5	0.123
20	**JA20-8-125**	8	1.25	44	17.5	—	21	4.5	7	7	13	8	0.5	1.1
25	**JA30-10-125**	10	1.25	49.5	19.5	—	24	5	8	8	17	9	0.5	2.5

ISO Standards Air Cylinder: Standard Double Acting, Double Rod

C85W Series

Ø 8, Ø 10, Ø 12, Ø 16, Ø 20, Ø 25 RoHS

How to Order

Double acting, Double rod C D 85WE 20 – 40 C J L V – B – M9BW S –

Built-in magnet

—	None
D	Built-in magnet

Bore size

8	8 mm
10	10 mm
12	12 mm
16	16 mm
20	20 mm
25	25 mm

Cylinder stroke [mm]
Refer to the next page for standard strokes.

Cushion

—	Rubber bumper (Standard)
C	Air cushion

Rod boot (Ø 20, Ø 25 only)

—	Without rod boot
J	Nylon tarpaulin (One end)
K	Heat resistant tarpaulin (One end)
JJ	Nylon tarpaulin (Both ends)
KK	Heat resistant tarpaulin (Both ends)

Accessory∗1

—	None
V	Rod end
W	Double knuckle joint

∗1 Refer to Mounting Brackets/ Accessories on page 15 for details of accessories.
∗ Accessory is shipped together with the product.

Auto switch mounting type∗1

A	Rail mounting
B	Band mounting

∗1 The symbol is "—" for no magnet.

Mounting bracket∗1

—	None
L	Single foot
M	Double foot
G	Flange
U	Trunnion

∗1 Refer to Mounting Brackets/Accessories on page 15 for details of mounting brackets.
∗ Mounting bracket is shipped together with the product.

Number of auto switches

—	2
S	1
n	n

Auto switch

—	Without auto switch

∗ For applicable auto switches, refer to the table below.
∗ Auto switches are shipped together with the product.

Made to order
For details, refer to page 14.

Applicable mounting bracket

Action	Mounting bracket			
	L	M	G	U
Rubber bumper	●	●	●	●
Air cushion∗1	●	●	●	●

∗1 Except Ø 8

Applicable Auto Switches/Refer to the **Auto Switch** Guide for further information.

Type	Special function	Electrical entry	Indicator light	Wiring (Output)	Load voltage DC	Load voltage AC	Auto switch model: Band mounting Perpendicular	Band mounting In-line	Rail mounting Perpendicular	Rail mounting In-line	Lead wire length [m] 0.5 (—)	1 (M)	3 (L)	5 (Z)	None (N)	Pre-wired connector	Applicable load	
Solid state auto switch	—	Grommet	Yes	3-wire (NPN)	5 V, 12 V	—	M9NV	M9N	M9NV	M9N	●	●	●	○	—	○	IC circuit	Relay, PLC
				3-wire (PNP)			M9PV	M9P	M9PV	M9P	●	●	●	○	—	○		
				2-wire	12 V		M9BV	M9B	M9BV	M9B	●	●	●	○	—	○	—	
		Connector					—	H7C	J79C	—	●	—	●	●	●	—		
	Diagnostic indication (2-colour indicator)	Grommet		3-wire (NPN)	5 V, 12 V		M9NWV	M9NW	M9NWV	M9NW	●	●	●	○	—	○	IC circuit	
				3-wire (PNP)			M9PWV	M9PW	M9PWV	M9PW	●	●	●	○	—	○		
				2-wire	12 V		M9BWV	M9BW	M9BWV	M9BW	●	●	●	○	—	○	—	
	Water resistant (2-colour indicator)			3-wire (NPN)	5 V, 12 V		M9NAV∗1	M9NA∗1	M9NAV∗1	M9NA∗1	○	○	●	○	—	○	IC circuit	
				3-wire (PNP)			M9PAV∗1	M9PA∗1	M9PAV∗1	M9PA∗1	○	○	●	○	—	○		
				2-wire	12 V		M9BAV∗1	M9BA∗1	M9BAV∗1	M9BA∗1	○	○	●	○	—	○	—	
	With diagnostic output (2-colour indicator)			4-wire (NPN)	5 V, 12 V		—	H7NF	—	F79F	●	—	●	○	—	○	IC circuit	
Reed auto switch	—	Grommet	Yes	3-wire (NPN equivalent)	—	5 V	—	A96V	A96	A96V	A96	●	—	●	—	—	—	IC circuit	—
				2-wire	24 V	—	200 V	—	—	A72	A72H	●	—	●	—	—	—	—	Relay, PLC
						12 V	100 V	A93V∗2	A93	A93V∗2	A93	●	●	●	●	—	—		
			No				100 V or less	A90V	A90	A90V	A90	●	—	●	—	—	—	IC circuit	
			Yes				—	—	C73C	A73C	—	●	—	●	●	●	—	—	
		Connector	No				24 V or less	—	C80C	A80C	—	●	—	●	●	●	—	IC circuit	
	Diagnostic indication (2-colour indicator)	Grommet	Yes			—	—	—	—	A79W	—	●	—	●	—	—	—	—	

∗1 Water resistant type auto switches can be mounted on the above models, but SMC cannot guarantee water resistance. Please contact SMC regarding water resistant types with the above model numbers.
∗2 1 m lead wire is only applicable to the D-A93.
∗ Lead wire length symbols: 0.5 m····· — (Example) M9NW
1 m····· M (Example) M9NWM
3 m····· L (Example) M9NWL
5 m····· Z (Example) M9NWZ
None····· N (Example) H7CN

∗ Since there are other applicable auto switches than listed above, refer to page 111 for details.
∗ Solid state auto switches marked with "○" are produced upon receipt of order.
∗ D-A9□/M9□/A7□/A80□/F7□/J7□ auto switches are shipped together, but not assembled. (For band mounting, only the auto switch mounting brackets are assembled before shipment.)
∗ When mounting a band on bore size Ø 8, Ø 10, or Ø 12, the D-A9□(V) cannot be mounted.
∗ When mounting a rail on bore size Ø 8, Ø 10, or Ø 12, the D-A9□(V) and A79W cannot be mounted.
∗ When mounting a rail on bore size Ø 20 or Ø 25, the D-M9□(V), M9□W(V), and M9□A(V) cannot be mounted.

Specifications

Bore size [mm]		8	10	12	16	20	25
Type		Pneumatic					
Action		Double acting, Double rod					
Fluid		Air					
Proof pressure		1.5 MPa					
Max. operating pressure		1.0 MPa					
Min. operating pressure	**Rubber bumper**	0.1 MPa	0.08 MPa		0.05 MPa		
	Air cushion	—	0.08 MPa		0.05 MPa		
Ambient and fluid temperature		Without auto switch: -20 °C to 80 °C (No freezing)					
		With auto switch: -10 °C to 60 °C (No freezing)					
Lubricant		Not required (Non-lube)					
Stroke length tolerance		$^{+1.0}_{0}$ mm				$^{+1.4}_{0}$ mm	
Piston speed		50 to 1500 mm/s					
Cushion		Rubber bumper					
		—	Air cushion				
Allowable kinetic energy	**Rubber bumper**	0.02 J	0.03 J	0.04 J	0.09 J	0.27 J	0.4 J
	Air cushion	—	0.17 J	0.19 J	0.4 J	0.66 J	0.97 J

Symbol

Rubber bumper

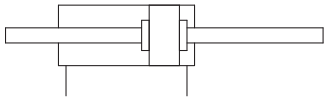

Air cushion

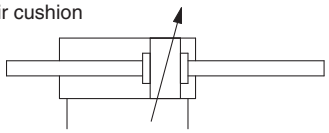

Standard Strokes

Bore size [mm]	Standard stroke [mm]*2*4	Max. stroke*3 [mm]
8*1	10, 25, 40, 50, 80, 100	100
10		
12	10, 25, 40, 50, 80, 100, 125, 160, 200	200
16		
20	10, 25, 40, 50, 80, 100, 125, 160, 200, 250, 300	500
25		

*1 Not available with air cushion.
*2 Other strokes are available on request.
*3 For exceeding the standard stroke range, it will be available as a special order (-X2018).
*4 The minimum stroke with air cushion is 25 mm.

Refer to pages 101 to 111 for cylinders with auto switches.

- Auto Switch Proper Mounting Position (Detection at stroke end) and Mounting Height
- Minimum Stroke for Auto Switch Mounting
- Operating Range
- Auto Switch Mounting Brackets/Part No.

Made to Order

(For details, refer to pages 115 to 120.)

Symbol	Specifications
-XA	Change of rod end shape*1
-XB6	Heat resistant cylinder (-10 to 150 °C)*2
-XB7	Cold resistant cylinder (-40 to 70 °C)*3
-XC4	With heavy duty scraper*3
-XC6□	Made of stainless steel*4

*1 Exclude Ø 8 air cushion.
*2 Rubber bumper Ø 10 to Ø 25 only
*3 Rubber bumper Ø 20 to Ø 25 only
*4 Rubber bumper only

Option: Ordering Example of Cylinder Assembly

Cylinder model: CD85WE20-50MW-B-M9BW

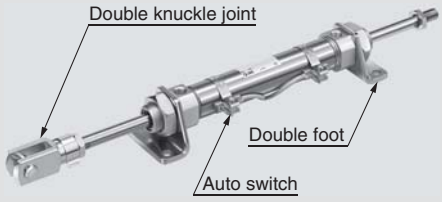

Mounting bracket M: Double foot
Rod end bracket W: Double knuckle joint
Auto switch D-M9BW: Band mounting, 2 pcs.

* Mounting bracket, double knuckle joint, and auto switch are shipped together with the product.

⚠ Precautions

Be sure to read this before handling the products. Refer to the back cover for safety instructions. For actuator and auto switch precautions, refer to the "Handling Precautions for SMC Products" and the "Operation Manual" on the SMC website: http://www.smc.eu

Mounting Brackets/Accessories

Mounting bracket/Accessory			Standard (mounted to the body)		Mounting bracket (shipped together)				Accessory (shipped together)	
			Mounting nut	Rod end nut	Mounting nut	Foot	Flange	Trunnion	Rod end	Double knuckle joint
Mounting bracket symbol	L	Single foot	● (1 pc.)	● (2 pcs.)	—	● (1 pc.)	—	—	—	—
	M	Double foot	● (1 pc.)	● (2 pcs.)	● (1 pc.)	● (2 pcs.)	—	—	—	—
	G	Flange	● (1 pc.)	● (2 pcs.)	—	—	● (1 pc.)	—	—	—
	U	Trunnion	● (1 pc.)	● (2 pcs.)	—	—	—	● (1 pc.)	—	—
Accessory symbol	V	Rod end	● (1 pc.)	● (2 pcs.)	—	—	—	—	● (1 pc.)	—
	W	Double knuckle joint	● (1 pc.)	● (2 pcs.)	—	—	—	—	—	● (1 pc.)

Mounting Bracket/Accessory Part Nos.

Mounting bracket/Accessory		Bore size [mm]						Contents
		8	10	12	16	20	25	
Mounting bracket	Rod end nut	C85NT10		C85NT16		C85NT20	C85NT25	1 rod end nut
	Mounting nut	C85SN10		C85SN16		C85SN25		1 mounting nut
	Foot (1 pc.)	C85L10A		C85L16A		C85L25A		1 foot
	Foot (2 pcs. with 1 mounting nut)	C85L10B		C85L16B		C85L25B		2 foots, 1 mounting nut
	Foot (1 pc. with 1 mounting nut)	C85L10C		C85L16C		C85L25C		1 foot, 1 mounting nut
	Flange	C85F10		C85F16		C85F25		1 flange
	Trunnion	C85T10		C85T16		C85T25		1 trunnion
Accessory	Rod end	KJ4D		KJ6D		KJ8D	KJ10D	1 rod end
	Double knuckle joint	GKM4-8		GKM6-12		GKM8-16	GKM10-20	1 double knuckle joint
	Floating joint	JA10-4-070		JA15-6-100		JA20-8-125	JA30-10-125	1 floating joint

∗ Refer to page 12 for dimensions of accessories.

Replacement Parts: For Standard Type

Bore size [mm]	Part no.	Note
20	C85A-20PS	Every set includes: 1 rod seal 1 flat washer 1 retaining ring
25	C85A-25PS	

∗ When replacing the seals, use **grease (GR-S-010: ordered separately)** on the sliding parts.
When replacing seals for a double rod actuator, order 2 sets of replacement parts.

Weights

[g]

Bore size [mm]			8	10	12	16	20	25
Basic weight	Without magnet	C85WE	43	46 (51)	96 (97)	106 (106)	205 (205)	289 (291)
	With magnet	CD85WE	46	46 (52)	96 (97)	106 (107)	208 (208)	293 (294)
Additional weight per 10 mm of stroke			3.0	3.3	6.4	7.4	12.0	17.5
Mounting bracket	Foot (1 pc.)	C85L□A	20		40		95	
	Foot (2 pcs. with 1 mounting nut)	C85L□B	55		105		210	
	Flange	C85F□	12		25		90	
	Trunnion	C85T□	20		50		75	
Accessory	Rod end	KJ□D	17		25		45	70
	Double knuckle joint	GKM□-□	10		20		50	100
	Floating joint	JA□-□-□	10		20		50	70

( ): For air cushion

Calculation example: **C85WE20-50MV**
- Basic weight ·····205 g (Ø 20)
- Additional weight ···12.0 g (at 10 mm stroke)
- Cylinder stroke ·····50 mm
- Mounting bracket: Double foot ···210 g
- Accessory: Rod end ·····45 g

205 + 12.0 x 50/10 + 210 + 45 = **520 g**

Dimensions

Double end boss-cut

C□85WE Bore size – Stroke – □

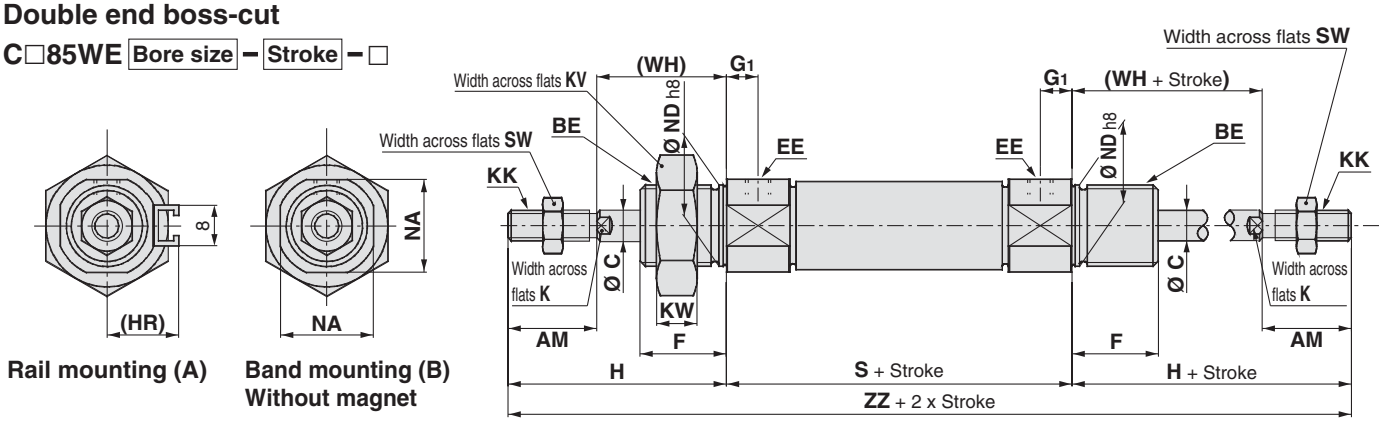

Rail mounting (A) Band mounting (B) Without magnet

Air cushion: C□85WE Bore size – Stroke C – □

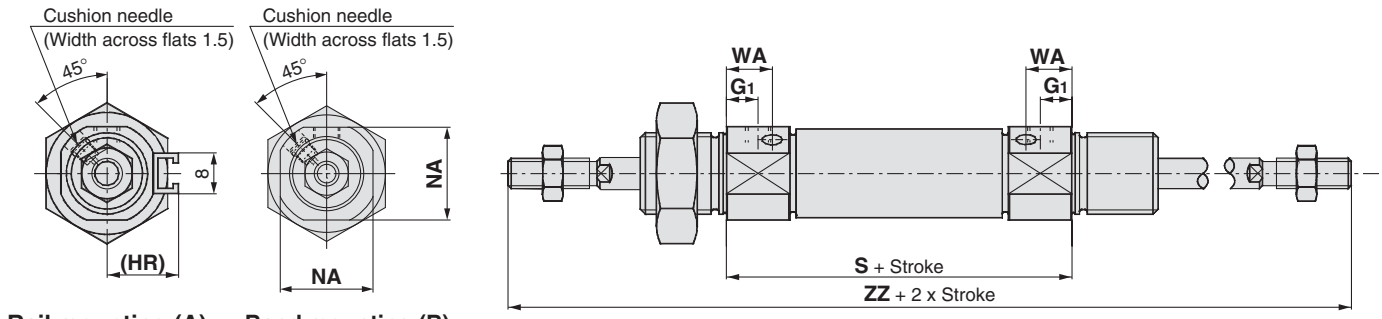

Rail mounting (A) Band mounting (B) Without magnet

With rod boot

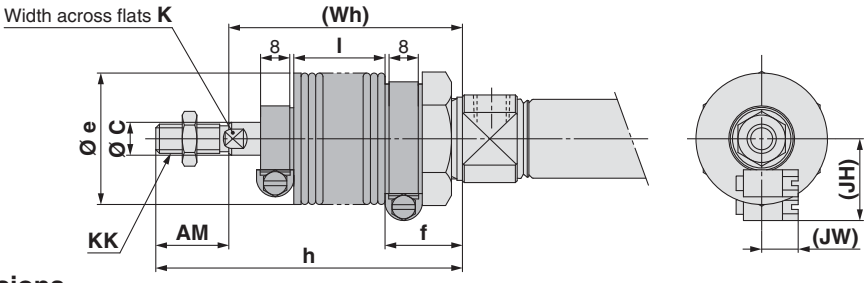

Dimensions

[mm]

Bore size	AM	BE	C	EE	F	G1	H	(HR)	K	KK	KV	KW	NA	ND	S	SW	WA	(WH)	ZZ
8	12	M12 x 1.25	4	M5 x 0.8	12	7	28	13.4	—	M4 x 0.7	19	6	15	12	48 {54}	7	—	16	104 {110}
10	12	M12 x 1.25	4	M5 x 0.8	12	7 (5.5)	28	14.2	—	M4 x 0.7	19	6	15	12	48 (53)	7	10.5	16	104 (109)
12	16	M16 x 1.5	6	M5 x 0.8	17	8 (5.5)	38	14.2	5	M6 x 1	24	8	18.3	16	52 (54)	10	9.5	22	128 (130)
16	16	M16 x 1.5	6	M5 x 0.8	17	8 (5.5)	38	14.2	5	M6 x 1	24	8	18.3	16	52 (54)	10	9.5	22	128 (130)
20	20	M22 x 1.5	8	G1/8	20	8	44	17	6	M8 x 1.25	32	11	24	22	62	13	13	24	150
25	22	M22 x 1.5	10	G1/8	22	8	50	20	8	M10 x 1.25	32	11	30	22	65	17	13	28	165

( ): For air cushion { }: For built-in magnet

With Rod Boot

[mm]

Bore size \ Stroke \ Item	AM	C	e	f	K	KK	h						
							1 to 50	51 to 100	101 to 150	151 to 200	201 to 300	301 to 400	401 to 500
20	20	8	36	22	6	M8 x 1.25	71	84	96	109	134	159	—
25	22	10	36	22	8	M10 x 1.25	74	87	99	112	137	162	187

Bore size \ Stroke \ Item	l							(JH)	(JW)	(Wh)						
	1 to 50	50 to 100	101 to 150	151 to 200	201 to 300	301 to 400	401 to 500	Reference	Reference	1 to 50	51 to 100	101 to 150	151 to 200	201 to 300	301 to 400	401 to 500
20	12.5	25	37.5	50	75	100	—	23.5	10.5	51	64	76	89	114	139	—
25	12.5	25	37.5	50	75	100	125	23.5	10.5	52	65	77	90	115	140	165

Refer to page 12 of Standard Type Single Rod for details of accessories (rod end, double knuckle joint, floating joint).

Dimensions

Bracket is shipped together with the product.

Single foot: C□85WE□−□L
(With mounting bracket)

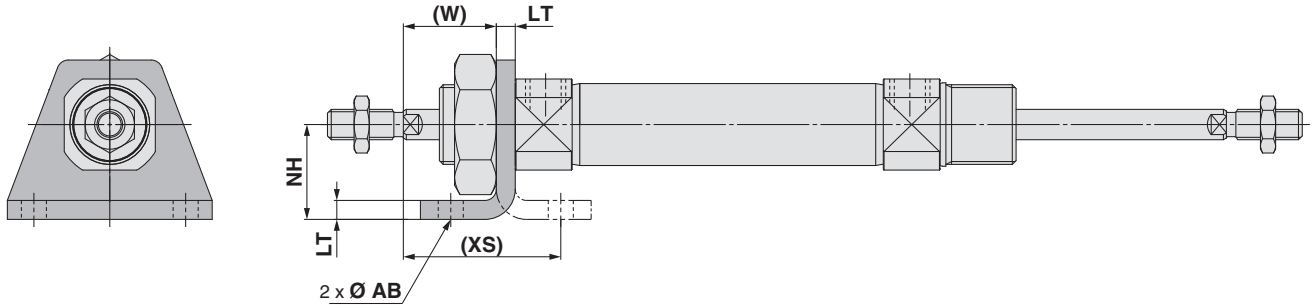

Double foot: C□85WE□−□M
(With mounting bracket)

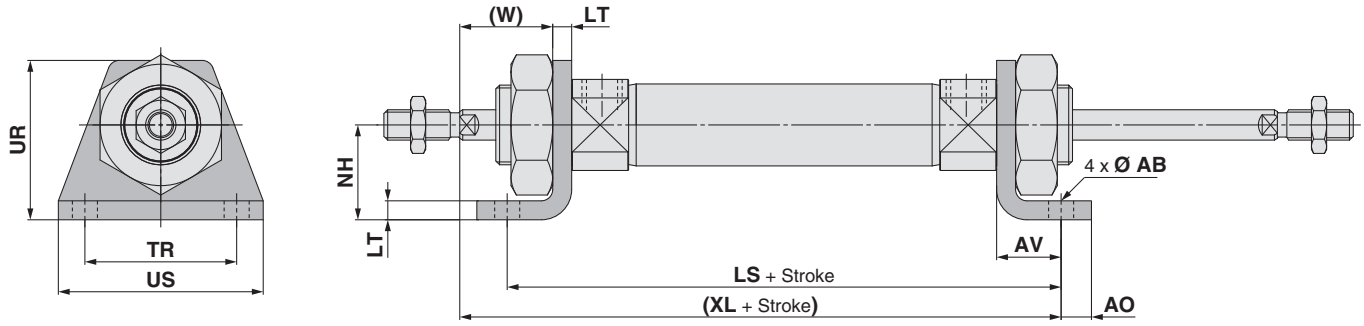

[mm]

Bore size	AB	AO	AV	LS	LT	NH	TR JS14	UR	US	(W)	(XL)	(XS)
8	4.5	5	11	70 {76}	3.2	16	25	26	35	12.8	75 {81}	23.8
10	4.5	5	11	70 (75)	3.2	16	25	26	35	12.8	75 (80)	23.8
12	5.5	6	14	80 (82)	4	20	32	33	42	18	88 (90)	32
16	5.5	6	14	80 (82)	4	20	32	33	42	18	88 (90)	32
20	6.6	8	17	96	5	25	40	42	54	19	103	36
25	6.6	8	17	99	5	25	40	42	54	23	110	40

( ): For air cushion { }: For built-in magnet

Refer to page 12 of Standard Type Single Rod for details of accessories (rod end, double knuckle joint, floating joint).

Dimensions

Bracket is shipped together with the product.

Flange: C□85WE□−□G
(With mounting bracket)

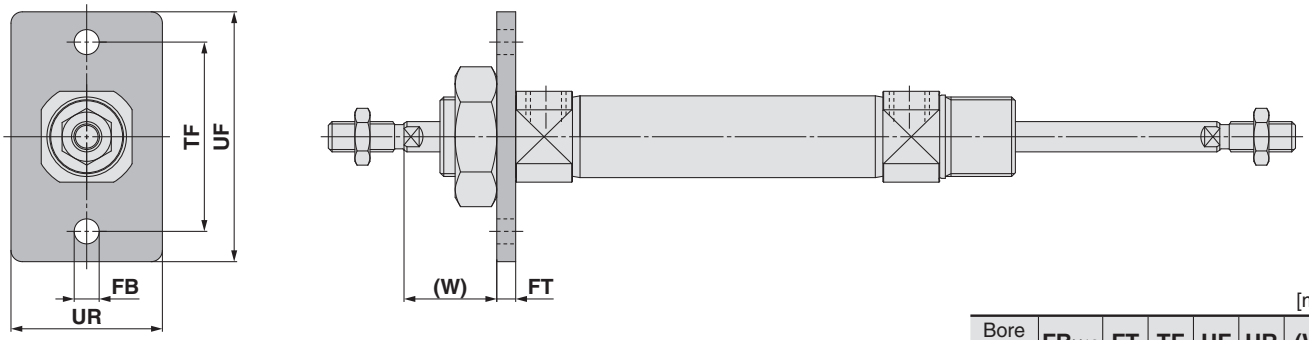

[mm]

Bore size	FB_{H13}	FT	TF	UF	UR	(W)
8	4.5	3.2	30	40	22	12.8
10	4.5	3.2	30	40	22	12.8
12	5.5	4	40	52	30	18
16	5.5	4	40	52	30	18
20	6.6	5	50	66	40	19
25	6.6	5	50	66	40	23

Trunnion: C□85WE□−□U
(With mounting bracket)

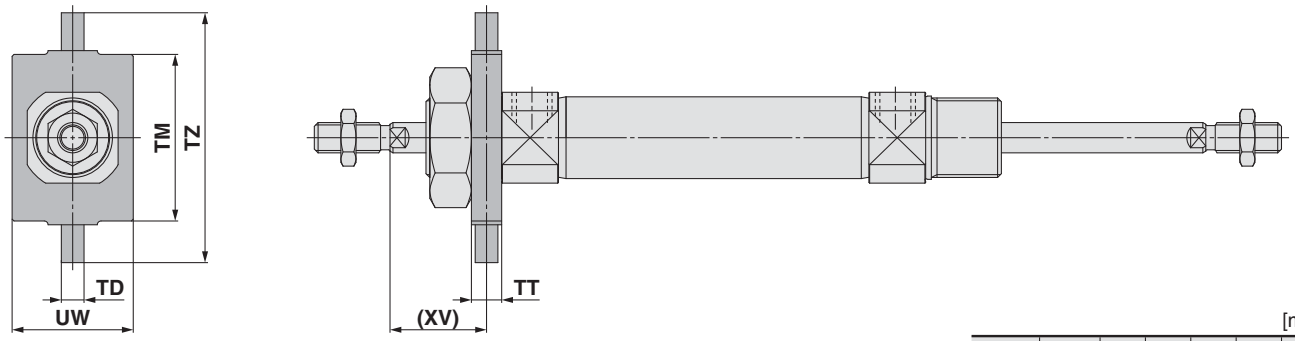

[mm]

Bore size	TD_{e8}	TM	TT	TZ	UW	(XV)
8	4	26	6	38	20	13
10	4	26	6	38	20	13
12	6	38	8	58	25	18
16	6	38	8	58	25	18
20	6	46	8	66	32	20
25	6	46	8	66	32	24

Refer to page 12 of Standard Type Single Rod for details of accessories (rod end, double knuckle joint, floating joint).

ISO Standards Air Cylinder: Standard Single Acting, Spring Return/Extend

C85 Series

Ø 8, Ø 10, Ø 12, Ø 16, Ø 20, Ø 25 RoHS

How to Order

Single acting, Spring return/extend

C D 85 N 20 – 40 S L V – B – M9BW S – ☐

Built-in magnet

—	None
D	Built-in magnet

Head cover type

N	Basic (Integrated clevis)
E	Double end boss-cut
F	Boss-cut/Basic
Y	Head cover axial port

Applicable head cover

Action	Head cover type			
	N	E	F	Y
Single acting, Spring return	●	●	●	●
Single acting, Spring extend	●	●	●	—

Bore size

8	8 mm
10	10 mm
12	12 mm
16	16 mm
20	20 mm
25	25 mm

Cylinder stroke [mm]
Refer to the next page for standard strokes.

Action

S	Single acting, Spring return
T	Single acting, Spring extend

Mounting bracket∗1

—	None
L	Single foot
M	Double foot
G	Flange
U	Trunnion
N	Clevis

∗1 Refer to Mounting Brackets/Accessories on page 21 for details of mounting brackets.
∗ Mounting bracket is shipped together with the product.

Applicable mounting bracket

Action	Head cover type	Mounting bracket				
		L	M	G	U	N
Single acting, Spring return	N	●	●	●	●	●
	E	●	●	●	●	—
	F	●	—	●	●	—
	Y	●	—	●	●	—
Single acting, Spring extend	N	●	●	●	●	●
	E	●	●	●	●	—
	F	●	—	●	●	—

Accessory∗1

—	None
V	Rod end
W	Double knuckle joint

∗1 Refer to Mounting Brackets/Accessories on page 21 for details of accessories.
∗ Accessory is shipped together with the product.

Auto switch mounting type∗1

A	Rail mounting
B	Band mounting

∗1 The symbol is "—" for no magnet.

Number of auto switches

—	2
S	1
n	n

Made to order
For details, refer to page 20.

Auto switch

—	Without auto switch

∗ For applicable auto switches, refer to the table below.
∗ Auto switches are shipped together with the product.

Applicable Auto Switches/Refer to the **Auto Switch** Guide for further information.

Type	Special function	Electrical entry	Indicator light	Wiring (Output)	Load voltage DC	Load voltage AC	Auto switch model: Band mounting Perpendicular	Band mounting In-line	Rail mounting Perpendicular	Rail mounting In-line	Lead wire length [m] 0.5 (—)	1 (M)	3 (L)	5 (Z)	None (N)	Pre-wired connector	Applicable load	
Solid state auto switch	—	Grommet	Yes	3-wire (NPN)	5 V, 12 V	—	M9NV	M9N	M9NV	M9N	●	●	●	○	—	○	IC circuit	Relay, PLC
				3-wire (PNP)			M9PV	M9P	M9PV	M9P	●	●	●	○	—	○		
				2-wire	12 V		M9BV	M9B	M9BV	M9B	●	●	●	○	—	○	—	
		Connector					—	H7C	J79C	—	●	—	●	●	●	—		
	Diagnostic indication (2-colour indicator)	Grommet		3-wire (NPN)	5 V, 12 V		M9NWV	M9NW	M9NWV	M9NW	●	●	●	○	—	○	IC circuit	
				3-wire (PNP)			M9PWV	M9PW	M9PWV	M9PW	●	●	●	○	—	○		
				2-wire	12 V		M9BWV	M9BW	M9BWV	M9BW	●	●	●	○	—	○	—	
	Water resistant (2-colour indicator)			3-wire (NPN)	5 V, 12 V		M9NAV∗1	M9NA∗1	M9NAV∗1	M9NA∗1	○	○	●	○	—	○	IC circuit	
				3-wire (PNP)			M9PAV∗1	M9PA∗1	M9PAV∗1	M9PA∗1	○	○	●	○	—	○		
				2-wire	12 V		M9BAV∗1	M9BA∗1	M9BAV∗1	M9BA∗1	○	○	●	○	—	○	—	
	With diagnostic output (2-colour indicator)			4-wire (NPN)	5 V, 12 V		—	H7NF	—	F79F	●	—	●	○	—	○	IC circuit	
Reed auto switch	—	Grommet	Yes	3-wire (NPN equivalent)	—	5 V	—	A96V	A96	A96V	A96	●	—	●	—	—	—	IC circuit	—
				2-wire	24 V	—	200 V	—	—	A72	A72H	●	—	●	—	—	—	—	Relay, PLC
						12 V	100 V	A93V∗2	A93	A93V∗2	A93	●	●	●	●	—	—		
			No				100 V or less	A90V	A90	A90V	A90	●	—	●	—	—	—	IC circuit	
			Yes				—	—	C73C	A73C	—	●	—	●	●	●	—	—	
		Connector	No				24 V or less	—	C80C	A80C	—	●	—	●	●	●	—	IC circuit	
	Diagnostic indication (2-colour indicator)	Grommet	Yes			—	—	—	—	A79W	—	●	—	●	—	—	—	—	

∗1 Water resistant type auto switches can be mounted on the above models, but SMC cannot guarantee water resistance. Please contact SMC regarding water resistant types with the above model numbers.
∗2 1 m lead wire is only applicable to the D-A93.
∗ Lead wire length symbols: 0.5 m····· — (Example) M9NW; 1 m····· M (Example) M9NWM; 3 m····· L (Example) M9NWL; 5 m····· Z (Example) M9NWZ; None····· N (Example) H7CN

∗ Since there are other applicable auto switches than listed above, refer to page 111 for details.
∗ Solid state auto switches marked with "○" are produced upon receipt of order.
∗ D-A9□/M9□/A7□/A80□/F7□/J7□ auto switches are shipped together, but not assembled. (For band mounting, only the auto switch mounting brackets are assembled before shipment.)
∗ When mounting a band on bore size Ø 8, Ø 10, or Ø 12, the D-A9□(V) cannot be mounted.
∗ When mounting a rail on bore size Ø 8, Ø 10, or Ø 12, the D-A9□(V) and A79W cannot be mounted.
∗ When mounting a rail on bore size Ø 20 or Ø 25, the D-M9□(V), M9□W(V), and M9□A(V) cannot be mounted.

Symbol

Single acting: Spring return, Rubber bumper

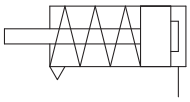

Single acting: Spring extend, Rubber bumper

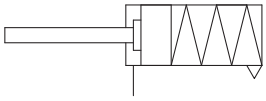

Refer to pages 101 to 111 for cylinders with auto switches.

- Auto Switch Proper Mounting Position (Detection at stroke end) and Mounting Height
- Minimum Stroke for Auto Switch Mounting
- Operating Range
- Auto Switch Mounting Brackets/Part No.

Made to Order

(For details, refer to pages 115 to 120.)

Symbol	Specifications
-XA	Change of rod end shape
-XC6□	Made of stainless steel

⚠ Precautions

Be sure to read this before handling the products. Refer to the back cover for safety instructions. For actuator and auto switch precautions, refer to the "Handling Precautions for SMC Products" and the "Operation Manual" on the SMC website: http://www.smc.eu

⚠ Caution

1. Avoid using the air cylinder in such a way that rotational torque would be applied to the piston rod.

To screw a bracket or a nut onto the threaded portion at the tip of the piston rod, make sure to retract the piston rod entirely, and place a wrench over the flat portion of the rod that protrudes.
Tighten it by giving consideration to prevent the tightening torque from being applied to the non-rotating guide.

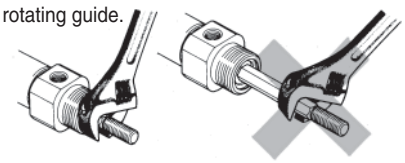

Specifications

Bore size [mm]	8	10	12	16	20	25
Type	Pneumatic					
Action	Single acting, Single rod					
Fluid	Air					
Proof pressure	1.5 MPa					
Max. operating pressure	1.0 MPa					
Min. operating pressure	0.22 MPa	0.18 MPa		0.13 MPa	Return: 0.18 MPa, Extend: 0.23 MPa	
Ambient and fluid temperature	Without auto switch: -20 °C to 80 °C (No freezing)					
	With auto switch: -10 °C to 60 °C (No freezing)					
Lubricant	Not required (Non-lube)					
Stroke length tolerance	$^{+1.0}_{0}$ mm				$^{+1.4}_{0}$ mm	
Piston speed	50 to 1500 mm/s					
Cushion	Rubber bumper					
Allowable kinetic energy	0.02 J	0.03 J	0.04 J	0.09 J	0.27 J	0.4 J

Standard Strokes

Bore size [mm]	Standard stroke [mm]*1	Max. stroke [mm]
8	10, 25, 50	50
10		
12		
16	10, 25, 50, 100, 150	150
20		
25		

*1 Other strokes are available on request. (Request based production)

Spring Retracting Force

Spring Return

[N]

Bore size [mm]	Standard stroke [mm]	Spring force 10 Rod extended	10 Rod retracted	25 Rod extended	25 Rod retracted	50 Rod extended	50 Rod retracted	100 Rod extended	100 Rod retracted	150 Rod extended	150 Rod retracted
8	10, 25, 50	4.4	4.0	4.4	3.4	4.4	2.5	—	—	—	—
10		6.3	5.7	6.3	4.9	6.3	3.5	—	—	—	—
12		7.2	6.6	7.2	5.8	7.2	4.4	—	—	—	—
16	10, 25, 50, 100, 150	13.2	12.1	13.2	10.3	13.2	7.5	13.2	7.5	13.2	7.5
20		21.6	18.6	21.6	16.7	21.6	11.8	39.2	9.8	39.2	9.8
25		27.5	25.3	27.5	22.1	27.5	16.7	47.1	13.7	47.1	15.7

Spring Extend

[N]

Bore size [mm]	Standard stroke [mm]	Spring force 10 Rod retracted	10 Rod extended	25 Rod retracted	25 Rod extended	50 Rod retracted	50 Rod extended	100 Rod retracted	100 Rod extended	150 Rod retracted	150 Rod extended
8	10, 25, 50	5.3	3.9	5.3	3.1	5.3	2.7	—	—	—	—
10		6.0	4.8	6.0	4.0	6.0	3.5	—	—	—	—
12		6.6	5.6	6.6	4.9	6.6	4.5	—	—	—	—
16	10, 25, 50, 100, 150	14.7	11.3	14.7	9.2	14.7	7.9	14.7	7.9	14.7	7.9
20		39.2	33.0	39.2	23.5	39.2	9.8	39.2	9.8	39.2	9.8
25		47.1	40.4	47.1	30.4	47.1	13.7	47.1	13.7	47.1	15.7

Option: Ordering Example of Cylinder Assembly

Cylinder model: CD85N20-50SNW-B-M9BW

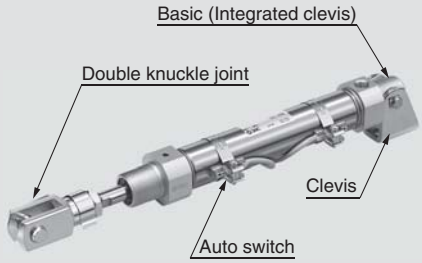

Head cover N: Basic (Integrated clevis)
Mounting bracket N: Clevis
Rod end bracket W: Double knuckle joint
Auto switch D-M9BW: Band mounting, 2 pcs.

* Mounting bracket, double knuckle joint, and auto switch are shipped together with the product.

Mounting Brackets/Accessories

Mounting bracket/ Accessory			Standard (mounted to the body)		Mounting bracket (shipped together)							Accessory (shipped together)	
			Mounting nut	Rod end nut	Mounting nut	Foot	Flange	Trunnion	Clevis pivot bracket	Clevis pin	Pin retaining ring	Rod end	Double knuckle joint
Mounting bracket symbol	L	Single foot	● (1 pc.)	● (1 pc.)	—	● (1 pc.)	—	—	—	—	—	—	—
	M	Double foot	● (1 pc.)	● (1 pc.)	● (1 pc.)	● (2 pcs.)	—	—	—	—	—	—	—
	G	Flange	● (1 pc.)	● (1 pc.)	—	—	● (1 pc.)	—	—	—	—	—	—
	U	Trunnion	● (1 pc.)	● (1 pc.)	—	—	—	● (1 pc.)	—	—	—	—	—
	N	Clevis	● (1 pc.)	● (1 pc.)	—	—	—	—	● (1 pc.)	● (1 pc.)	● (2 pcs.)	—	—
Accessory symbol	V	Rod end	● (1 pc.)	● (1 pc.)	—	—	—	—	—	—	—	● (1 pc.)	—
	W	Double knuckle joint	● (1 pc.)	● (1 pc.)	—	—	—	—	—	—	—	—	● (1 pc.)

Mounting Bracket/Accessory Part Nos.

Mounting bracket/Accessory		Bore size [mm]						Contents
		8	10	12	16	20	25	
Mounting bracket	Rod end nut	C85NT10		C85NT16		C85NT20	C85NT25	1 rod end nut
	Mounting nut	C85SN10		C85SN16		C85SN25		1 mounting nut
	Foot (1 pc.)	C85L10A		C85L16A		C85L25A		1 foot
	Foot (2 pcs. with 1 mounting nut)	C85L10B		C85L16B		C85L25B		2 foots, 1 mounting nut
	Foot (1 pc. with 1 mounting nut)	C85L10C		C85L16C		C85L25C		1 foot, 1 mounting nut
	Flange	C85F10		C85F16		C85F25		1 flange
	Trunnion	C85T10		C85T16		C85T25		1 trunnion
	Clevis	C85C10		C85C16		C85C25		1 clevis pivot bracket, 1 clevis pin, 2 pin retaining rings
Accessory	Rod end	KJ4D		KJ6D		KJ8D	KJ10D	1 rod end
	Double knuckle joint	GKM4-8		GKM6-12		GKM8-16	GKM10-20	1 double knuckle joint
	Floating joint	JA10-4-070		JA15-6-100		JA20-8-125	JA30-10-125	1 floating joint

∗ Refer to page 12 for dimensions of accessories.

Replacement Parts: For Standard Type (Only for single acting, spring extend)

Bore size [mm]	Part no.	Note
20	C85A-20PS	Every set includes: 1 rod seal 1 flat washer 1 retaining ring
25	C85A-25PS	

∗ When replacing the seals, use **grease (GR-S-010: ordered separately)** on the sliding parts.
In the single acting, spring return type, there is no rod seal so it is not possible to replace any seals.

Weights

Single Acting, Spring Return (S)

[g]

Bore size [mm]				8	10	12	16	20	25
Basic weight	Without magnet	1 to 50 mm stroke	C85N□-□S	36	40	80	98	185	249
			C85E□-□S	38	42	83	102	190	254
			C85F□-□S	35	38	74	88	170	232
			C85Y□-□S	35	38	74	88	170	233
		51 to 100 mm stroke	C85N□-□S	—	—	—	119	248	340
			C85E□-□S	—	—	—	123	253	345
			C85F□-□S	—	—	—	109	233	323
			C85Y□-□S	—	—	—	109	234	324
		101 to 150 mm stroke	C85N□-□S	—	—	—	140	283	390
			C85E□-□S	—	—	—	144	288	395
			C85F□-□S	—	—	—	131	268	373
			C85Y□-□S	—	—	—	131	268	374
	With magnet	1 to 50 mm stroke	CD85N□-□S	38	42	86	102	188	253
			CD85E□-□S	40	44	89	106	193	258
			CD85F□-□S	37	40	80	90	173	236
			CD85Y□-□S	37	40	80	92	174	237
		51 to 100 mm stroke	CD85N□-□S	—	—	—	123	251	344
			CD85E□-□S	—	—	—	127	257	349
			CD85F□-□S	—	—	—	113	236	326
			CD85Y□-□S	—	—	—	113	237	328
		101 to 150 mm stroke	CD85N□-□S	—	—	—	144	286	394
			CD85E□-□S	—	—	—	148	291	399
			CD85F□-□S	—	—	—	135	271	376
			CD85Y□-□S	—	—	—	135	272	378
Additional weight per 10 mm of stroke				2.1	2.3	4.1	5.1	8.1	11.3
Mounting bracket	Foot (1 pc.)		C85L□A	20		40		95	
	Foot (2 pcs. with 1 mounting nut)		C85L□B	55		105		210	
	Flange		C85F□	12		25		90	
	Trunnion		C85T□	20		50		75	
	Clevis		C85C□	20		40		85	
Accessory	Rod end		KJ□D	17		25		45	70
	Double knuckle joint		GKM□-□	10		20		50	100
	Floating joint		JA□-□-□	10		20		50	70

Calculation example: **C85N20-50SNV**
- Basic weight ····· 185 g (Ø 20)
- Additional weight ··· 8.1 g (at 10 mm stroke)
- Cylinder stroke ····· 50 mm
- Mounting bracket: Clevis ··· 85 g
- Accessory: Rod end ····· 45 g

185 + 8.1 x 50/10 + 85 + 45 ≈ **356 g**

Single Acting, Spring Extend (T)

[g]

Bore size [mm]				8	10	12	16	20	25
Basic weight	Without magnet	1 to 50 mm stroke	C85N□-□T	43	47	90	116	205	274
			C85E□-□T	45	49	93	120	209	279
			C85F□-□T	41	46	84	106	189	257
		51 to 100 mm stroke	C85N□-□T	—	—	—	146	229	309
			C85E□-□T	—	—	—	150	234	314
			C85F□-□T	—	—	—	137	214	291
		101 to 150 mm stroke	C85N□-□T	—	—	—	177	256	344
			C85E□-□T	—	—	—	181	260	349
			C85F□-□T	—	—	—	167	240	327
	With magnet	1 to 50 mm stroke	CD85N□-□T	45	49	93	120	208	278
			CD85E□-□T	47	51	96	124	213	283
			CD85F□-□T	43	48	87	110	193	261
		51 to 100 mm stroke	CD85N□-□T	—	—	—	150	233	312
			CD85E□-□T	—	—	—	154	238	317
			CD85F□-□T	—	—	—	141	218	295
		101 to 150 mm stroke	CD85N□-□T	—	—	—	181	259	348
			CD85E□-□T	—	—	—	184	264	353
			CD85F□-□T	—	—	—	171	244	331
Additional weight per 10 mm of stroke				2.1	2.3	4.1	5.1	8.1	11.3
Mounting bracket	Foot (1 pc.)		C85L□A	20		40		95	
	Foot (2 pcs. with 1 mounting nut)		C85L□B	55		105		210	
	Flange		C85F□	12		25		90	
	Trunnion		C85T□	20		50		75	
	Clevis		C85C□	20		40		85	
Accessory	Rod end		KJ□D	17		25		45	70
	Double knuckle joint		GKM□-□	10		20		50	100
	Floating joint		JA□-□-□	10		20		50	70

Calculation example: **C85N20-50TNV**
- Basic weight ····· 205 g (Ø 20)
- Additional weight ··· 8.1 g (at 10 mm stroke)
- Cylinder stroke ····· 50 mm
- Mounting bracket: Clevis ··· 85 g
- Accessory: Rod end ····· 45 g

205 + 8.1 x 50/10 + 85 + 45 ≈ **376 g**

Dimensions: Single Acting, Spring Return

Basic (Integrated clevis)

C□85N Bore size **–** Stroke **S –** □

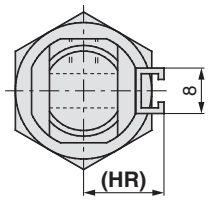

Rail mounting (A)

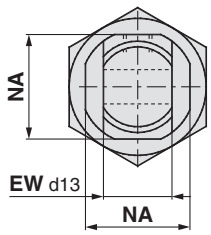

Band mounting (B)
Without magnet

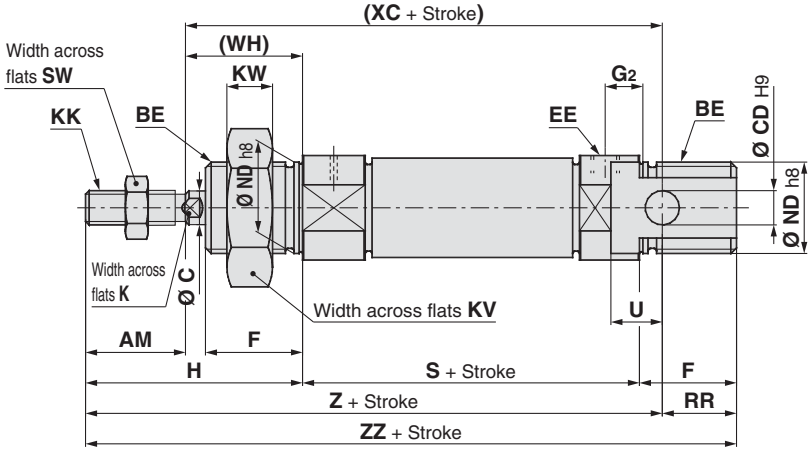

Double end boss-cut

C□85E Bore size **–** Stroke **S –** □

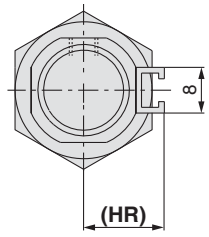

Rail mounting (A)

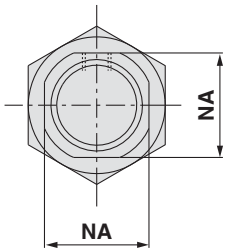

Band mounting (B)
Without magnet

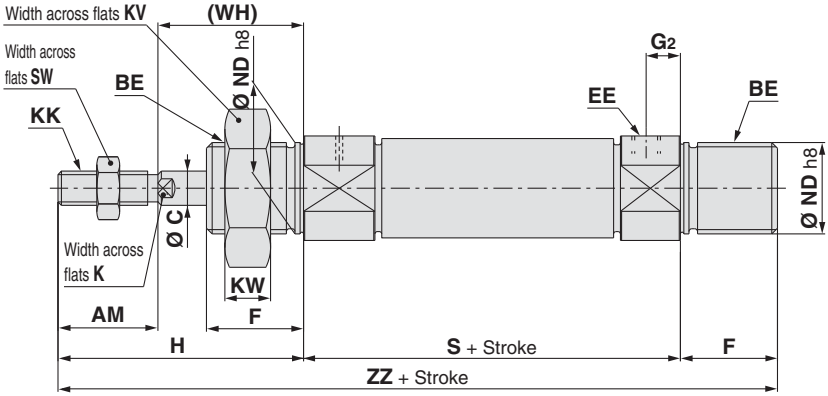

Dimensions

[mm]

Bore size	AM	BE	C	CD	EE	EW	F	G_2	H	(HR)	K	KK	KV	KW	NA	ND	RR	SW	U	(WH)
8	12	M12 x 1.25	4	4	M5 x 0.8	8	12	5	28	13.4	—	M4 x 0.7	19	6	15	12	10	7	6	16
10	12	M12 x 1.25	4	4	M5 x 0.8	8	12	5	28	14.2	—	M4 x 0.7	19	6	15	12	10	7	6	16
12	16	M16 x 1.5	6	6	M5 x 0.8	12	17	6	38	14.2	5	M6 x 1	24	8	18.3	16	14	10	9	22
16	16	M16 x 1.5	6	6	M5 x 0.8	12	17	6	38	14.2	5	M6 x 1	24	8	18.3	16	13	10	9	22
20	20	M22 x 1.5	8	8	G1/8	16	20	8	44	17	6	M8 x 1.25	32	11	24	22	11	13	12	24
25	22	M22 x 1.5	10	8	G1/8	16	22	8	50	20	8	M10 x 1.25	32	11	30	22	11	17	12	28

Bore size	S			(XC)			Z			ZZ		
	1 to 50	51 to 100	101 to 150	1 to 50	51 to 100	101 to 150	1 to 50	51 to 100	101 to 150	1 to 50	51 to 100	101 to 150
8	46 (52)	—	—	64 (70)	—	—	76 (82)	—	—	86 (92)	—	—
10	46 (50)	—	—	64 (68)	—	—	76 (80)	—	—	86 (90)	—	—
12	50 (53.5)	—	—	75 (78.5)	—	—	91 (94.5)	—	—	105 (108.5)	—	—
16	56 (59.5)	71.5 (75)	87 (90.5)	82 (85.5)	97.5 (101)	113 (116.5)	98 (101.5)	113.5 (117)	129 (132.5)	111 (114.5)	126.5 (130)	142 (145.5)
20	62	112	137	95	145	170	115	165	190	126	176	201
25	65	113.5	138.5	104	152.5	177.5	126	174.5	199.5	137	185.5	210.5

( ): For built-in magnet

Refer to page 12 of Standard Type Single Rod for details of accessories (rod end, double knuckle joint, floating joint).

Dimensions: Single Acting, Spring Return

Boss-cut/Basic, Head cover axial port

C□85F/Y Bore size – Stroke S – □

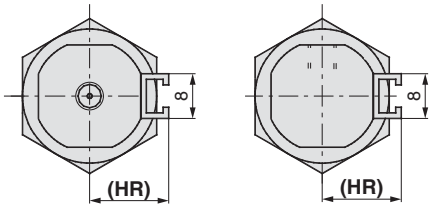

Head cover axial port Boss-cut/Basic

Rail mounting (A)

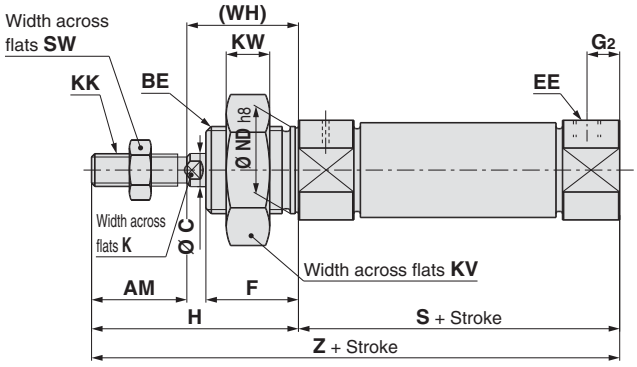

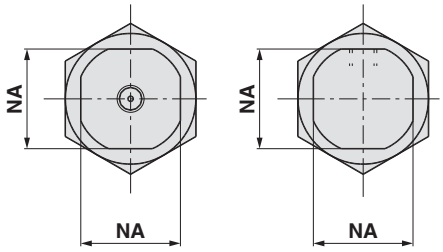

Head cover axial port Boss-cut/Basic

Band mounting (B)
Without magnet

Dimensions

[mm]

Bore size	AM	BE	C	EE	F	G_2	H	(HR)	K	KK	KV	KW	NA	ND	SW	(WH)
8	12	M12 x 1.25	4	M5 x 0.8	12	5	28	13.4	—	M4 x 0.7	19	6	15	12	7	16
10	12	M12 x 1.25	4	M5 x 0.8	12	5	28	14.2	—	M4 x 0.7	19	6	15	12	7	16
12	16	M16 x 1.5	6	M5 x 0.8	17	6	38	14.2	5	M6 x 1	24	8	18.3	16	10	22
16	16	M16 x 1.5	6	M5 x 0.8	17	6	38	14.2	5	M6 x 1	24	8	18.3	16	10	22
20	20	M22 x 1.5	8	G1/8	20	8	44	17	6	M8 x 1.25	32	11	24	22	13	24
25	22	M22 x 1.5	10	G1/8	22	8	50	20	8	M10 x 1.25	32	11	30	22	17	28

Bore size	S			Z		
	1 to 50	51 to 100	101 to 150	1 to 50	51 to 100	101 to 150
8	46 (52)	—	—	74 (80)	—	—
10	46 (50)	—	—	74 (78)	—	—
12	50 (53.5)	—	—	88 (91.5)	—	—
16	50 (53.5)	65.5 (69)	81 (84.5)	88 (91.5)	103.5 (107)	119 (122.5)
20	62	112	137	106	156	181
25	65	113.5	138.5	115	163.5	188.5

( ): For built-in magnet

Refer to page 12 of Standard Type Single Rod for details of accessories (rod end, double knuckle joint, floating joint).

Dimensions: Single Acting, Spring Return

Bracket is shipped together with the product.

Single foot: C□85N□−□SL
(With mounting bracket)

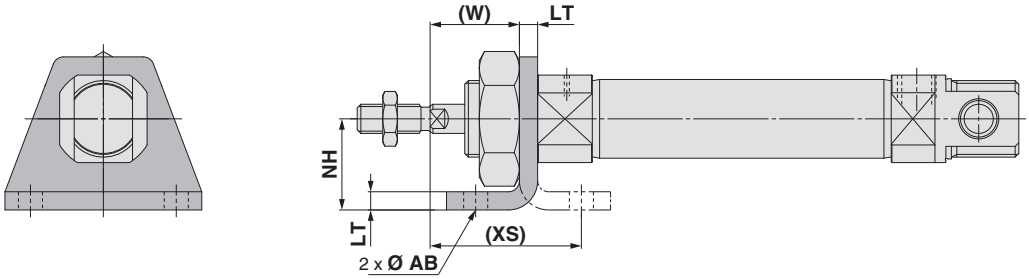

Double foot: C□85N□−□SM
(With mounting bracket)

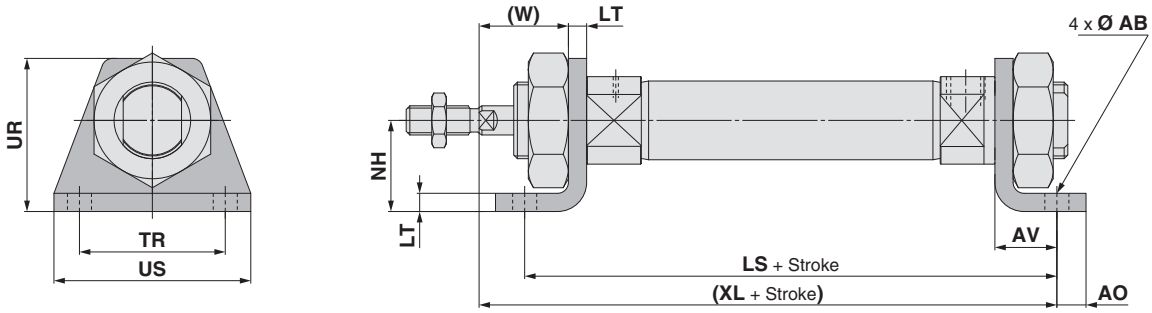

[mm]

Bore size	AB	AO	AV	LS			LT	NH	TR$_{Js14}$	UR	US	(W)	(XS)	(XL)		
				1 to 50	51 to 100	101 to 150								1 to 50	51 to 100	101 to 150
8	4.5	5	11	68 (74)	—	—	3.2	16	25	26	35	12.8	23.8	73 (79)	—	—
10	4.5	5	11	68 (72)	—	—	3.2	16	25	26	35	12.8	23.8	73 (77)	—	—
12	5.5	6	14	78 (81.5)	—	—	4	20	32	33	42	18	32	86 (89.5)	—	—
16	5.5	6	14	84 (87.5)	99.5 (103)	115 (118.5)	4	20	32	33	42	18	32	92 (95.5)	107.5 (111)	123 (126.5)
20	6.6	8	17	96	146	171	5	25	40	42	54	19	36	103	153	178
25	6.6	8	17	96	147.5	172.5	5	25	40	42	54	23	40	110	158.5	183.5

( ): For built-in magnet

Refer to page 12 of Standard Type Single Rod for details of accessories (rod end, double knuckle joint, floating joint).

Dimensions: Single Acting, Spring Return

Bracket is shipped together with the product.

Rod flange: C□85N□−□SG
(With mounting bracket)

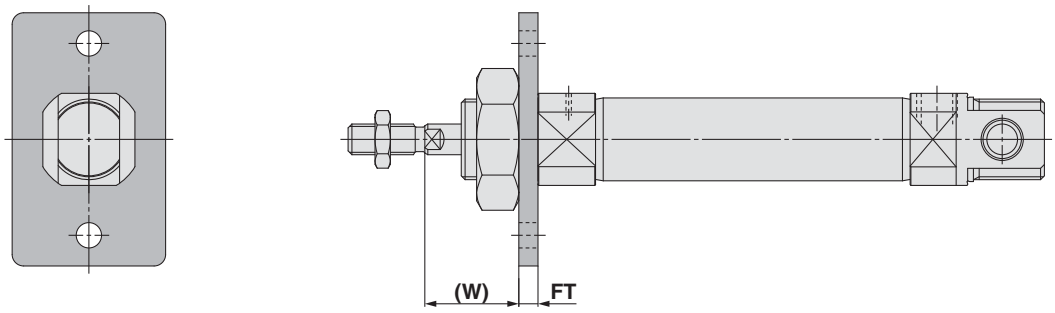

Head flange: C□85N□−□SG
(With mounting bracket)

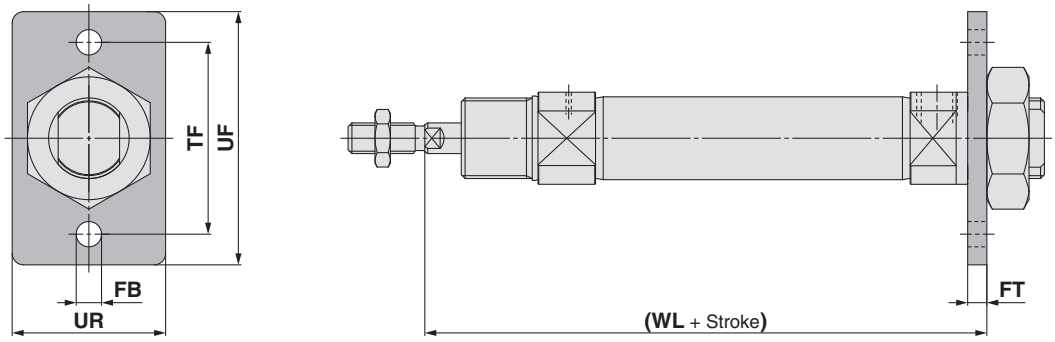

[mm]

Bore size	FB H13	FT	TF	UF	UR	(W)	(WL)		
							1 to 50	51 to 100	101 to 150
8	4.5	3.2	30	40	22	12.8	65.2 (71.2)	—	—
10	4.5	3.2	30	40	22	12.8	65.2 (69.2)	—	—
12	5.5	4	40	52	30	18	76 (79.5)	—	—
16	5.5	4	40	52	30	18	82 (85.5)	97.5 (101)	113 (116.5)
20	6.6	5	50	66	40	19	91	141	166
25	6.6	5	50	66	40	23	98	146.5	171.5

( ): For built-in magnet

Refer to page 12 of Standard Type Single Rod for details of accessories (rod end, double knuckle joint, floating joint).

Dimensions: Single Acting, Spring Return

Bracket is shipped together with the product.

Rod trunnion: C□85N□−□SU (With mounting bracket)

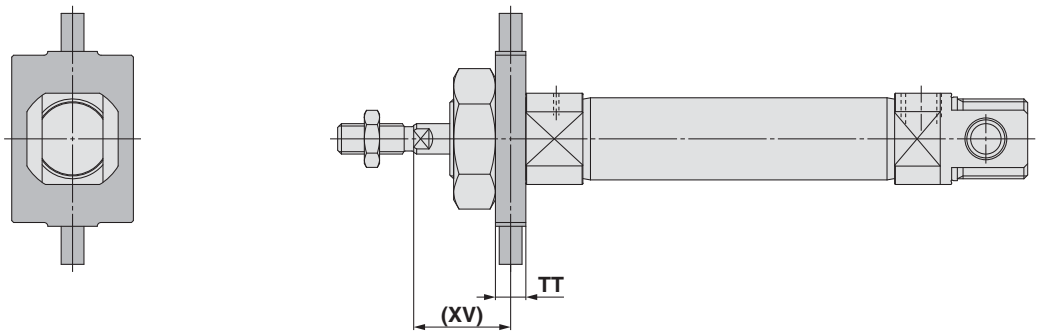

Head trunnion: C□85N□−□SU (With mounting bracket)

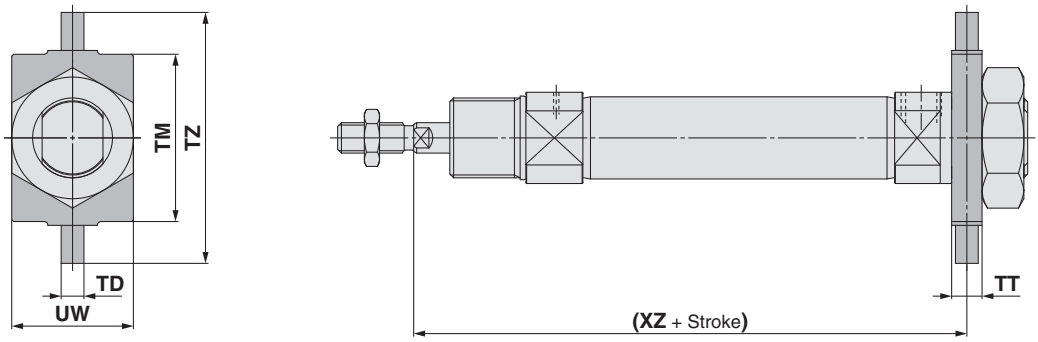

[mm]

Bore size	TD e8	TM	TT	TZ	UW	(XV)	(XZ) 1 to 50	(XZ) 51 to 100	(XZ) 101 to 150
8	4	26	6	38	20	13	65 (71)	—	—
10	4	26	6	38	20	13	65 (69)	—	—
12	6	38	8	58	25	18	76 (79.5)	—	—
16	6	38	8	58	25	18	82 (85.5)	97.5 (101)	113 (116.5)
20	6	46	8	66	32	20	90	140	165
25	6	46	8	66	32	24	97	145.5	170.5

( ): For built-in magnet

Clevis: C□85N□−□SN (With mounting bracket)

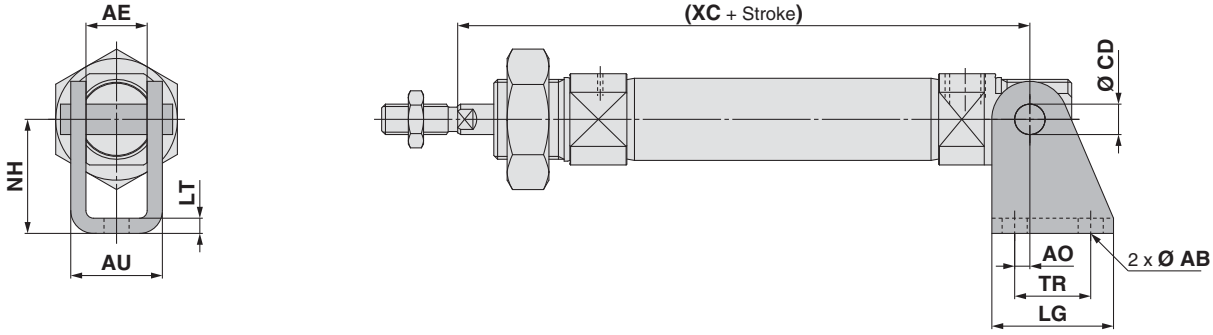

[mm]

Bore size	AB	AE	AO	AU	CD H9	LG	LT	NH	TR	(XC) 1 to 50	(XC) 51 to 100	(XC) 101 to 150
8	4.5	8.1	1.5	13.1	4	20	2.5	24	12.5	64 (70)	—	—
10	4.5	8.1	1.5	13.1	4	20	2.5	24	12.5	64 (68)	—	—
12	5.5	12.1	2	18.5	6	25	3.2	27	15	75 (78.5)	—	—
16	5.5	12.1	2	18.5	6	25	3.2	27	15	82 (85.5)	97.5 (101)	113 (116.5)
20	6.6	16.1	4	24.1	8	32	4	30	20	95	145	170
25	6.6	16.1	4	24.1	8	32	4	30	20	104	152.5	177.5

( ): For built-in magnet

Refer to page 12 of Standard Type Single Rod for details of accessories (rod end, double knuckle joint, floating joint).

Dimensions: Single Acting, Spring Extend

Basic (Integrated clevis)

C□85N Bore size – Stroke T – □

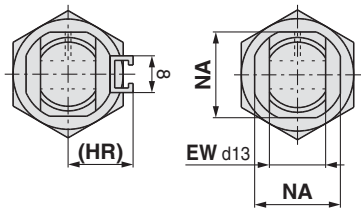

Rail mounting (A)

Band mounting (B)
Without magnet

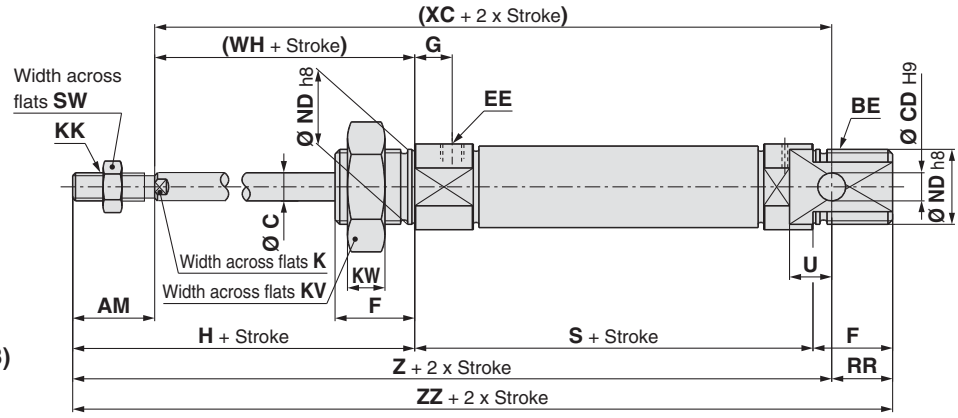

Double end boss-cut

C□85E Bore size – Stroke T – □

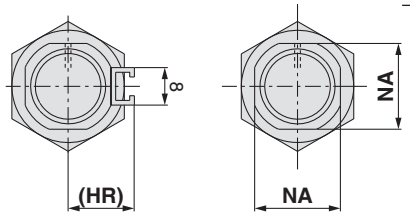

Rail mounting (A)

Band mounting (B)
Without magnet

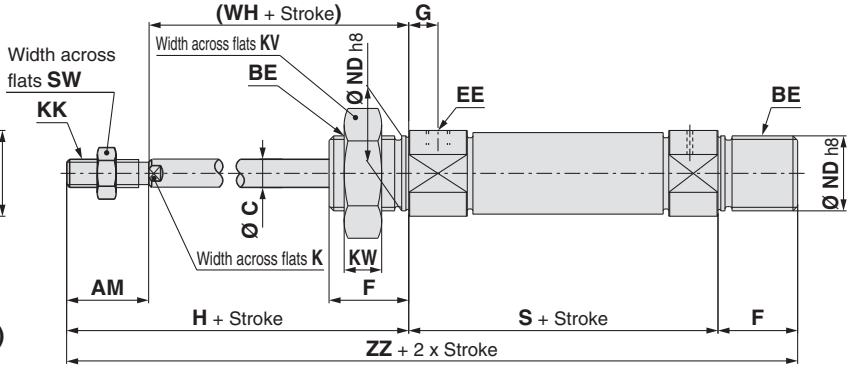

Dimensions

[mm]

Bore size	AM	BE	C	CD	EE	EW	F	G	H	(HR)	K	KK	KV	KW	NA	ND	RR	SW	U	(WH)
8	12	M12 x 1.25	4	4	M5 x 0.8	8	12	7	28	13.4	—	M4 x 0.7	19	6	15	12	10	7	6	16
10	12	M12 x 1.25	4	4	M5 x 0.8	8	12	7	28	14.2	—	M4 x 0.7	19	6	15	12	10	7	6	16
12	16	M16 x 1.5	6	6	M5 x 0.8	12	17	8	38	14.2	5	M6 x 1	24	8	18.3	16	14	10	9	22
16	16	M16 x 1.5	6	6	M5 x 0.8	12	17	8	38	14.2	5	M6 x 1	24	8	18.3	16	13	10	9	22
20	20	M22 x 1.5	8	8	G1/8	16	20	8	44	17	6	M8 x 1.25	32	11	24	22	11	13	12	24
25	22	M22 x 1.5	10	8	G1/8	16	22	8	50	20	8	M10 x 1.25	32	11	30	22	11	17	12	28

Bore size	S			(XC)			Z			ZZ		
	1 to 50	51 to 100	101 to 150	1 to 50	51 to 100	101 to 150	1 to 50	51 to 100	101 to 150	1 to 50	51 to 100	101 to 150
8	64.5 (70.5)	—	—	82.5 (88.5)	—	—	94.5 (100.5)	—	—	104.5 (110.5)	—	—
10	64.5 (68.5)	—	—	82.5 (86.5)	—	—	94.5 (98.5)	—	—	104.5 (108.5)	—	—
12	70 (73.5)	—	—	95 (98.5)	—	—	111 (114.5)	—	—	125 (128.5)	—	—
16	75 (78.5)	101 (104.5)	127 (130.5)	101 (104.5)	127 (130.5)	153 (156.5)	117 (120.5)	143 (146.5)	169 (172.5)	130 (133.5)	156 (159.5)	182 (185.5)
20	87	112	137	120	145	170	140	165	190	151	176	201
25	88.5	113.5	138.5	127.5	152.5	177.5	149.5	174.5	199.5	160.5	185.5	210.5

( ): For built-in magnet

Refer to page 12 of Standard Type Single Rod for details of accessories (rod end, double knuckle joint, floating joint).

Dimensions: Single Acting, Spring Extend

Boss-cut/Basic

C□85F Bore size **–** Stroke **T –** □

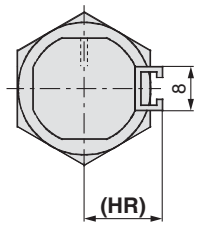

Rail mounting (A)

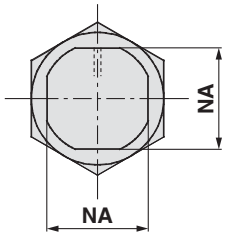

Band mounting (B)
Without magnet

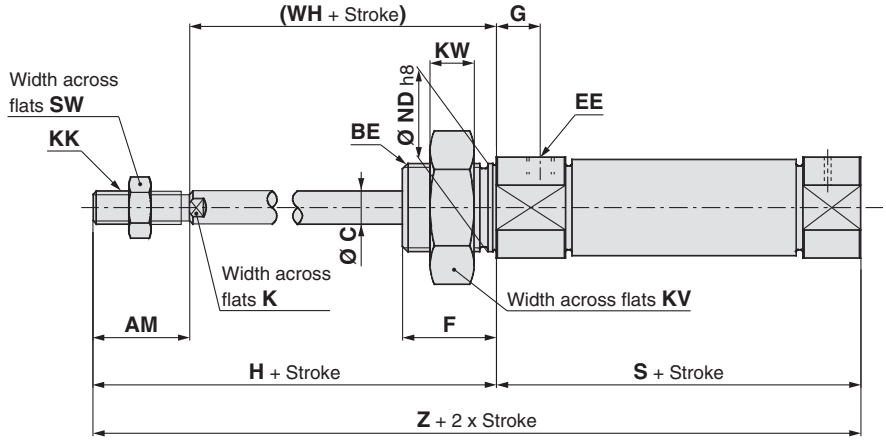

Dimensions

[mm]

Bore size	AM	BE	C	EE	F	G	H	(HR)	K	KK	KV	KW	NA	ND	SW	(WH)
8	12	M12 x 1.25	4	M5 x 0.8	12	7	28	13.4	—	M4 x 0.7	19	6	15	12	7	16
10	12	M12 x 1.25	4	M5 x 0.8	12	7	28	14.2	—	M4 x 0.7	19	6	15	12	7	16
12	16	M16 x 1.5	6	M5 x 0.8	17	8	38	14.2	5	M6 x 1	24	8	18.3	16	10	22
16	16	M16 x 1.5	6	M5 x 0.8	17	8	38	14.2	5	M6 x 1	24	8	18.3	16	10	22
20	20	M22 x 1.5	8	G1/8	20	8	44	17	6	M8 x 1.25	32	11	24	22	13	24
25	20	M22 x 1.5	10	G1/8	22	8	50	20	8	M10 x 1.25	32	11	30	22	17	28

Bore size	S			Z		
	1 to 50	51 to 100	101 to 150	1 to 50	51 to 100	101 to 150
8	64.5 (70.5)	—	—	92.5 (98.5)	—	—
10	64.5 (68.5)	—	—	92.5 (96.5)	—	—
12	70 (73.5)	—	—	108 (111.5)	—	—
16	69 (72.5)	95 (98.5)	121 (124.5)	107 (110.5)	133 (136.5)	159 (162.5)
20	87	112	137	131	156	181
25	88.5	113.5	138.5	138.5	163.5	188.5

( ): For built-in magnet

Refer to page 12 of Standard Type Single Rod for details of accessories (rod end, double knuckle joint, floating joint).

Dimensions: Single Acting, Spring Extend

Bracket is shipped together with the product.

Single foot: C□85N□−□TL
(With mounting bracket)

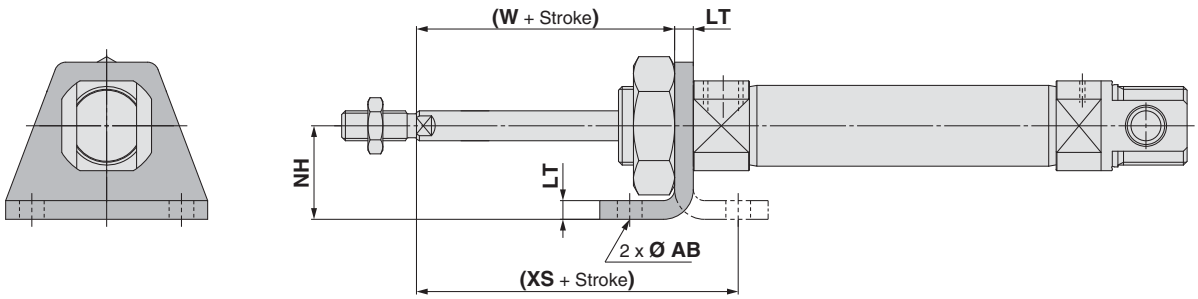

Double foot: C□85N□−□TM
(With mounting bracket)

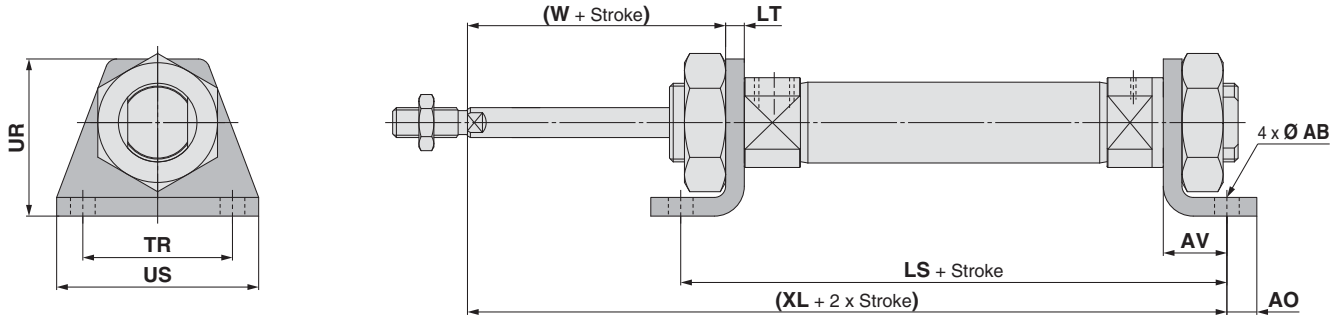

[mm]

Bore size	AB	AO	AV	LS			LT	NH	TR$_{Js14}$	UR	US	(W)	(XS)	(XL)		
				1 to 50	51 to 100	101 to 150								1 to 50	51 to 100	101 to 150
8	4.5	5	11	86.5 (92.5)	—	—	3.2	16	25	26	35	12.8	23.8	91.5 (97.5)	—	—
10	4.5	5	11	86.5 (90.5)	—	—	3.2	16	25	26	35	12.8	23.8	91.5 (95.5)	—	—
12	5.5	6	14	98 (101.5)	—	—	4	20	32	33	42	18	32	106 (109.5)	—	—
16	5.5	6	14	103 (106.5)	129 (132.5)	155 (158.5)	4	20	32	33	42	18	32	111 (114.5)	137 (140.5)	163 (166.5)
20	6.6	8	17	121	146	171	5	25	40	42	54	19	36	128	153	178
25	6.6	8	17	122.5	147.5	172.5	5	25	40	42	54	23	40	133.5	158.5	183.5

( ): For built-in magnet

Refer to page 12 of Standard Type Single Rod for details of accessories (rod end, double knuckle joint, floating joint).

Dimensions: Single Acting, Spring Extend

Bracket is shipped together with the product.

Rod flange: C□85N□−□TG
(With mounting bracket)

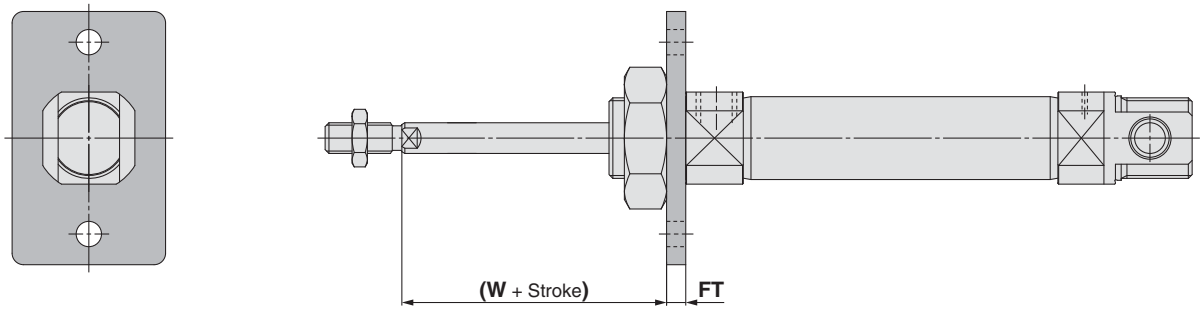

Head flange: C□85N□−□TG
(With mounting bracket)

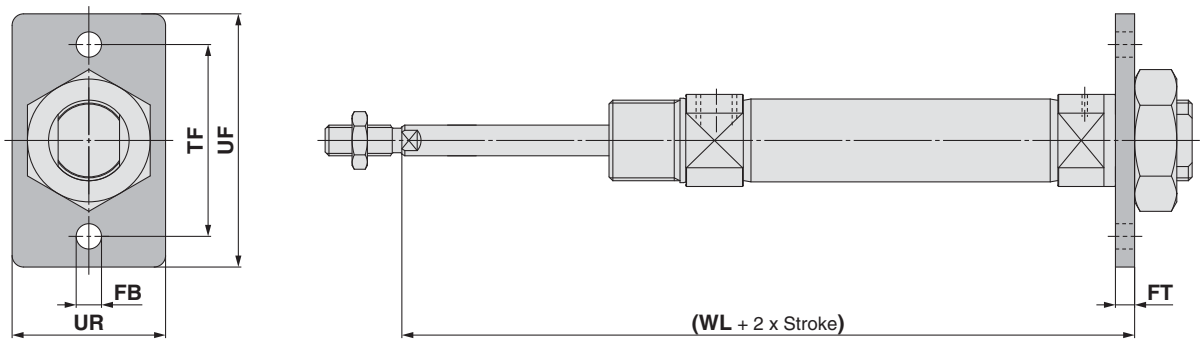

[mm]

Bore size	FB$_{H13}$	FT	TF	UF	UR	(W)	(WL)		
							1 to 50	51 to 100	101 to 150
8	4.5	3.2	30	40	22	12.8	83.7 (89.7)	—	—
10	4.5	3.2	30	40	22	12.8	83.7 (87.7)	—	—
12	5.5	4	40	52	30	18	96 (99.5)	—	—
16	5.5	4	40	52	30	18	101 (104.5)	127 (130.5)	153 (156.5)
20	6.6	5	50	66	40	19	116	141	166
25	6.6	5	50	66	40	23	121.5	146.5	171.5

( ): For built-in magnet

Refer to page 12 of Standard Type Single Rod for details of accessories (rod end, double knuckle joint, floating joint).

Dimensions: Single Acting, Spring Extend

Bracket is shipped together with the product.

Rod trunnion: C□85N□−□TU
(With mounting bracket)

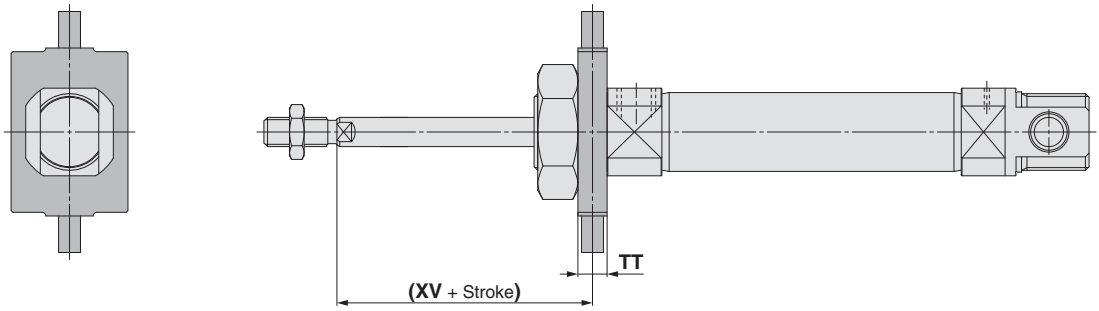

Head trunnion: C□85N□−□TU
(With mounting bracket)

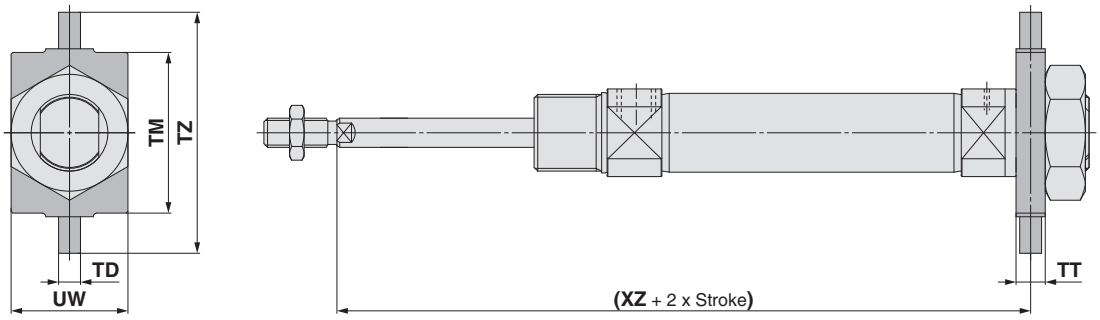

[mm]

Bore size	TD e8	TM	TT	TZ	UW	(XV)	(XZ)		
							1 to 50	51 to 100	101 to 150
8	4	26	6	38	20	13	83.5 (89.5)	—	—
10	4	26	6	38	20	13	83.5 (87.5)	—	—
12	6	38	8	58	25	18	96 (99.5)	—	—
16	6	38	8	58	25	18	101 (104.5)	127 (130.5)	153 (156.5)
20	6	46	8	66	32	20	115	140	165
25	6	46	8	66	32	24	120.5	145.5	170.5

( ): For built-in magnet

Clevis: C□85N□−□TN
(With mounting bracket)

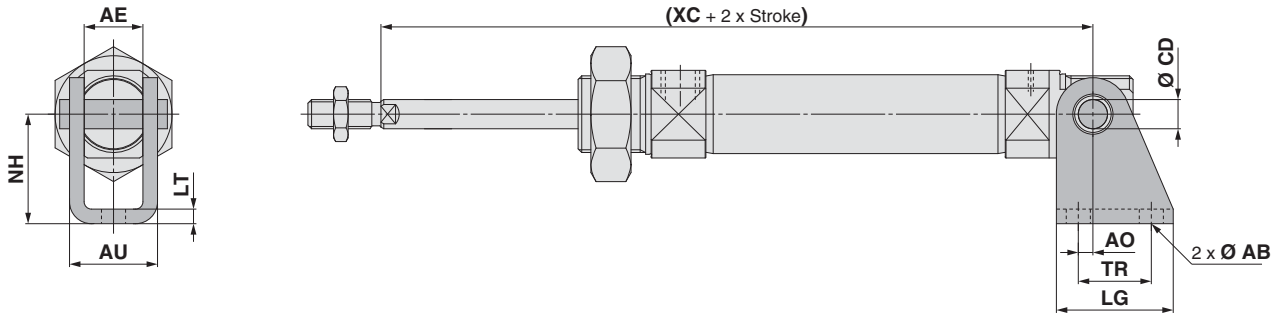

[mm]

Bore size	AB	AE	AO	AU	CD H9	LG	LT	NH	TR	(XC)		
										1 to 50	51 to 100	101 to 150
8	4.5	8.1	1.5	13.1	4	20	2.5	24	12.5	82.5 (88.5)	—	—
10	4.5	8.1	1.5	13.1	4	20	2.5	24	12.5	82.5 (86.5)	—	—
12	5.5	12.1	2	18.5	6	25	3.2	27	15	95 (98.5)	—	—
16	5.5	12.1	2	18.5	6	25	3.2	27	15	101 (104.5)	127 (130.5)	153 (156.5)
20	6.6	16.1	4	24.1	8	32	4	30	20	120	145	170
25	6.6	16.1	4	24.1	8	32	4	30	20	127.5	152.5	177.5

( ): For built-in magnet

Refer to page 12 of Standard Type Single Rod for details of accessories (rod end, double knuckle joint, floating joint).

ISO Standards Air Cylinder: Non-rotating Rod
Double Acting, Single Rod
C85K Series
Ø 8, Ø 10, Ø 12, Ø 16, Ø 20, Ø 25 RoHS

How to Order

Double acting, Single rod C D 85K N 20 – 40 L V – B – M9BW S – ☐

Built-in magnet

—	None
D	Built-in magnet

Head cover type

N	Basic (Integrated clevis)
E	Double end boss-cut
F	Boss-cut/Basic
Y	Head cover axial port

Applicable head cover

Action	Head cover type			
	N	E	F	Y
Rubber bumper	●	●	●	●

Bore size

8	8 mm
10	10 mm
12	12 mm
16	16 mm
20	20 mm
25	25 mm

Cylinder stroke [mm]
Refer to the next page for standard strokes.

Mounting bracket∗1

—	None
L	Single foot
M	Double foot
G	Flange
U	Trunnion
N	Clevis

∗1 Refer to Mounting Brackets/Accessories on page 35 for details of mounting brackets.
∗ Mounting bracket is shipped together with the product.

Applicable mounting bracket

Action	Head cover type	Mounting bracket				
		L	M	G	U	N
Rubber bumper	N	●	●	●	●	●
	E	●	●	●	●	—
	F	●	—	●	●	—
	Y	●	—	●	●	—

Accessory∗1

—	None
V	Rod end
W	Double knuckle joint

∗1 Refer to Mounting Brackets/Accessories on page 35 for details of accessories.
∗ Accessory is shipped together with the product.

Auto switch mounting type∗1

A	Rail mounting
B	Band mounting

∗1 The symbol is "—" for no magnet.

Auto switch

—	Without auto switch

∗ For applicable auto switches, refer to the table below.
∗ Auto switches are shipped together with the product.

Number of auto switches

—	2
S	1
n	n

Made to order
For details, refer to page 34.

Applicable Auto Switches/Refer to the **Auto Switch** Guide for further information.

Type	Special function	Electrical entry	Indicator light	Wiring (Output)	Load voltage DC	Load voltage AC	Auto switch model: Band mounting Perpendicular	Band mounting In-line	Rail mounting Perpendicular	Rail mounting In-line	Lead wire length [m] 0.5 (—)	1 (M)	3 (L)	5 (Z)	None (N)	Pre-wired connector	Applicable load	
Solid state auto switch	—	Grommet	Yes	3-wire (NPN)	24 V	5 V, 12 V	—	M9NV	M9N	M9NV	M9N	●	●	●	○	—	○	IC circuit	Relay, PLC
				3-wire (PNP)				M9PV	M9P	M9PV	M9P	●	●	●	○	—	○		
				2-wire		12 V		M9BV	M9B	M9BV	M9B	●	●	●	○	—	○	—	
		Connector						—	H7C	J79C	—	●	—	●	●	●	—		
	Diagnostic indication (2-colour indicator)	Grommet		3-wire (NPN)		5 V, 12 V		M9NWV	M9NW	M9NWV	M9NW	●	●	●	○	—	○	IC circuit	
				3-wire (PNP)				M9PWV	M9PW	M9PWV	M9PW	●	●	●	○	—	○		
				2-wire		12 V		M9BWV	M9BW	M9BWV	M9BW	●	●	●	○	—	○	—	
	Water resistant (2-colour indicator)			3-wire (NPN)		5 V, 12 V		M9NAV∗1	M9NA∗1	M9NAV∗1	M9NA∗1	○	○	●	○	—	○	IC circuit	
				3-wire (PNP)				M9PAV∗1	M9PA∗1	M9PAV∗1	M9PA∗1	○	○	●	○	—	○		
				2-wire		12 V		M9BAV∗1	M9BA∗1	M9BAV∗1	M9BA∗1	○	○	●	○	—	○	—	
	With diagnostic output (2-colour indicator)			4-wire (NPN)		5 V, 12 V		—	H7NF	—	F79F	●	—	●	○	—	○	IC circuit	
Reed auto switch	—	Grommet	Yes	3-wire (NPN equivalent)	—	5 V	—	A96V	A96	A96V	A96	●	—	●	—	—	—	IC circuit	—
				2-wire	24 V	—	200 V	—	—	A72	A72H	●	—	●	—	—	—	—	Relay, PLC
						12 V	100 V	A93V∗2	A93	A93V∗2	A93	●	●	●	●	—	—		
			No				100 V or less	A90V	A90	A90V	A90	●	—	●	—	—	—	IC circuit	
			Yes				—	—	C73C	A73C	—	●	—	●	●	●	—	—	
		Connector	No				24 V or less	—	C80C	A80C	—	●	—	●	●	●	—	IC circuit	
	Diagnostic indication (2-colour indicator)	Grommet	Yes			—	—	—	—	A79W	—	●	—	●	—	—	—	—	

∗1 Water resistant type auto switches can be mounted on the above models, but SMC cannot guarantee water resistance. Please contact SMC regarding water resistant types with the above model numbers.
∗2 1 m lead wire is only applicable to the D-A93.
∗ Lead wire length symbols: 0.5 m····· — (Example) M9NW
1 m····· M (Example) M9NWM
3 m····· L (Example) M9NWL
5 m····· Z (Example) M9NWZ
None····· N (Example) H7CN

∗ Since there are other applicable auto switches than listed above, refer to page 111 for details.
∗ Solid state auto switches marked with "○" are produced upon receipt of order.
∗ D-A9□/M9□/A7□/A80□/F7□/J7□ auto switches are shipped together, but not assembled. (For band mounting, only the auto switch mounting brackets are assembled before shipment.)
∗ When mounting a band on bore size Ø 8, Ø 10, or Ø 12, the D-A9□(V) cannot be mounted.
∗ When mounting a rail on bore size Ø 8, Ø 10, or Ø 12, the D-A9□(V) and A79W cannot be mounted.
∗ When mounting a rail on bore size Ø 20 or Ø 25, the D-M9□(V), M9□W(V), and M9□A(V) cannot be mounted.

Specifications

Bore size [mm]	8	10	12	16	20	25
Type	Pneumatic					
Action	Double acting, Single rod					
Fluid	Air					
Proof pressure	1.5 MPa					
Max. operating pressure	1.0 MPa					
Min. operating pressure	0.1 MPa	0.08 MPa		0.05 MPa		
Ambient and fluid temperature	Without auto switch: -20 °C to 80 °C (No freezing)					
	With auto switch: -10 °C to 60 °C (No freezing)					
Lubricant	Not required (Non-lube)					
Stroke length tolerance	$^{+1.0}_{0}$ mm				$^{+1.4}_{0}$ mm	
Piston speed	50 to 1500 mm/s					
Cushion	Rubber bumper					
Allowable kinetic energy	0.02 J	0.03 J	0.04 J	0.09 J	0.27 J	0.4 J
Non-rotating accuracy	±1.5°		±1°		±0.7°	

Symbol

Rubber bumper

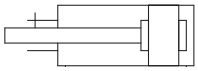

Refer to pages 101 to 111 for cylinders with auto switches.

- Auto Switch Proper Mounting Position (Detection at stroke end) and Mounting Height
- Minimum Stroke for Auto Switch Mounting
- Operating Range
- Auto Switch Mounting Brackets/Part No.

Standard Strokes

Bore size [mm]	Standard stroke [mm]*1	Max. stroke*2 [mm]
8	10, 25, 40, 50, 80, 100	100
10		
12	10, 25, 40, 50, 80, 100, 125, 160, 200	200
16		
20	10, 25, 40, 50, 80, 100, 125, 160, 200, 250, 300	1000
25		

*1 Other strokes are available on request.
*2 For exceeding the standard stroke range, it will be available as a special order (-X2018).

Made to Order

Made to Order
(For details, refer to pages 115 to 120.)

Symbol	Specifications
-XA	Change of rod end shape
-XC6□	Made of stainless steel

Option: Ordering Example of Cylinder Assembly

Cylinder model: CD85KN20-50NW-B-M9BW

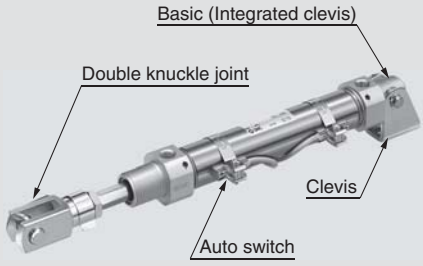

Head cover N: Basic (Integrated clevis)
Mounting bracket N: Clevis
Rod end bracket W: Double knuckle joint
Auto switch D-M9BW: Band mounting, 2 pcs.

* Mounting bracket, double knuckle joint, and auto switch are shipped together with the product.

⚠ Precautions

Be sure to read this before handling the products. Refer to the back cover for safety instructions. For actuator and auto switch precautions, refer to the "Handling Precautions for SMC Products" and the "Operation Manual" on the SMC website: http://www.smc.eu

Mounting Brackets/Accessories

Mounting bracket/ Accessory			Standard (mounted to the body)		Mounting bracket (shipped together)							Accessory (shipped together)	
			Mounting nut	Rod end nut	Mounting nut	Foot	Flange	Trunnion	Clevis pivot bracket	Clevis pin	Pin retaining ring	Rod end	Double knuckle joint
Mounting bracket symbol	L	Single foot	● (1 pc.)	● (1 pc.)	—	● (1 pc.)	—	—	—	—	—	—	—
	M	Double foot	● (1 pc.)	● (1 pc.)	● (1 pc.)	● (2 pcs.)	—	—	—	—	—	—	—
	G	Flange	● (1 pc.)	● (1 pc.)	—	—	● (1 pc.)	—	—	—	—	—	—
	U	Trunnion	● (1 pc.)	● (1 pc.)	—	—	—	● (1 pc.)	—	—	—	—	—
	N	Clevis	● (1 pc.)	● (1 pc.)	—	—	—	—	● (1 pc.)	● (1 pc.)	● (2 pcs.)	—	—
Accessory symbol	V	Rod end	● (1 pc.)	● (1 pc.)	—	—	—	—	—	—	—	● (1 pc.)	—
	W	Double knuckle joint	● (1 pc.)	● (1 pc.)	—	—	—	—	—	—	—	—	● (1 pc.)

Mounting Bracket/Accessory Part Nos.

Mounting bracket/Accessory		Bore size [mm]						Contents
		8	10	12	16	20	25	
Mounting bracket	Rod end nut	C85NT10		C85NT16		C85NT20	C85NT25	1 rod end nut
	Mounting nut	C85SN10		C85SN16		C85SN25		1 mounting nut
	Foot (1 pc.)	C85L10A		C85L16A		C85L25A		1 foot
	Foot (2 pcs. with 1 mounting nut)	C85L10B		C85L16B		C85L25B		2 foots, 1 mounting nut
	Foot (1 pc. with 1 mounting nut)	C85L10C		C85L16C		C85L25C		1 foot, 1 mounting nut
	Flange	C85F10		C85F16		C85F25		1 flange
	Trunnion	C85T10		C85T16		C85T25		1 trunnion
	Clevis	C85C10		C85C16		C85C25		1 clevis pivot bracket, 1 clevis pin, 2 pin retaining rings
Accessory	Rod end	KJ4D		KJ6D		KJ8D	KJ10D	1 rod end
	Double knuckle joint	GKM4-8		GKM6-12		GKM8-16	GKM10-20	1 double knuckle joint
	Floating joint	JA10-4-070		JA15-6-100		JA20-8-125	JA30-10-125	1 floating joint

∗ Refer to page 12 for dimensions of accessories.

Replacement Parts: For Non-rotating Rod Type (K)

Bore size [mm]	Part no.	Note
20	C85K-20PS	Every set includes: 1 rod seal 1 flat washer 1 retaining ring
25	C85K-25PS	

∗ When replacing the seals, use **grease (GR-S-010: ordered separately)** on the sliding parts.

Weights

[g]

Bore size [mm]			8	10	12	16	20	25
Basic weight	Without magnet	C85KN	39	41	82	95	189	257
		C85KE	41	43	86	98	194	262
		C85KF	37	39	77	85	174	240
		C85KY	37	39	77	85	175	241
	With magnet	CD85KN	39	41	83	95	193	261
		CD85KE	41	43	86	99	198	266
		CD85KF	37	39	77	85	178	244
		CD85KY	37	39	78	85	178	245
Additional weight per 10 mm of stroke			2.3	2.5	4.5	5.5	8.7	12.2
Mounting bracket	Foot (1 pc.)	C85L□A	20		40		95	
	Foot (2 pcs. with 1 mounting nut)	C85L□B	55		105		210	
	Flange	C85F□	12		25		90	
	Trunnion	C85T□	20		50		75	
	Clevis	C85C□	20		40		85	
Accessory	Rod end	KJ□D	17		25		45	70
	Double knuckle joint	GKM□-□	10		20		50	100
	Floating joint	JA□-□-□	10		20		50	70

Calculation example: **C85KN20-50NV**
- Basic weight ····· 189 g (Ø 20)
- Additional weight ··· 8.7 g (at 10 mm stroke)
- Cylinder stroke ····· 50 mm
- Mounting bracket: Clevis ··· 85 g
- Accessory: Rod end ····· 45 g

189 + 8.7 x 50/10 + 85 + 45 ≈ **363 g**

Dimensions

Basic (Integrated clevis)

Rubber bumper: C□85KN Bore size – Stroke – □

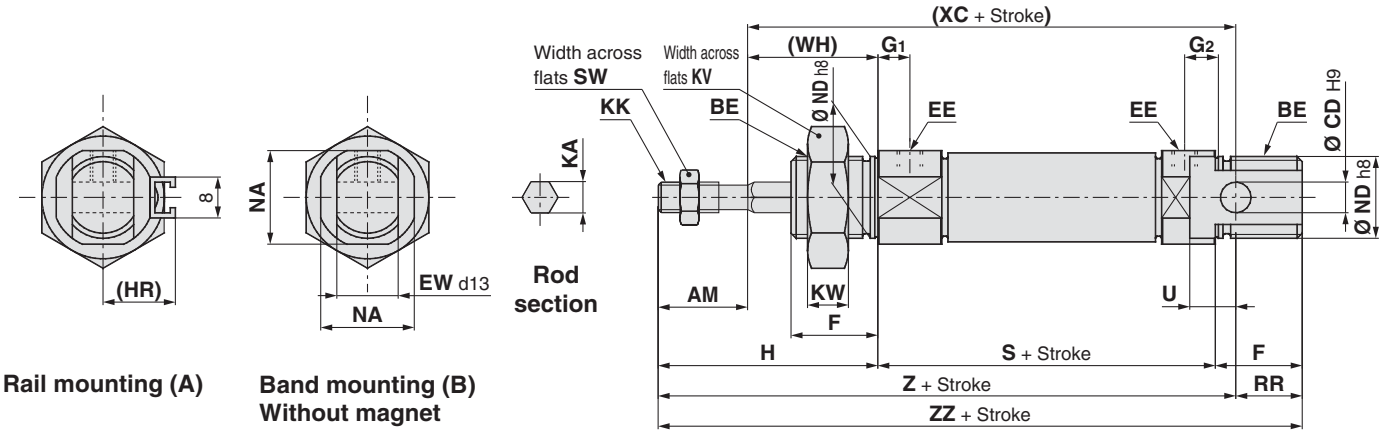

Double end boss-cut

Rubber bumper: C□85KE Bore size – Stroke – □

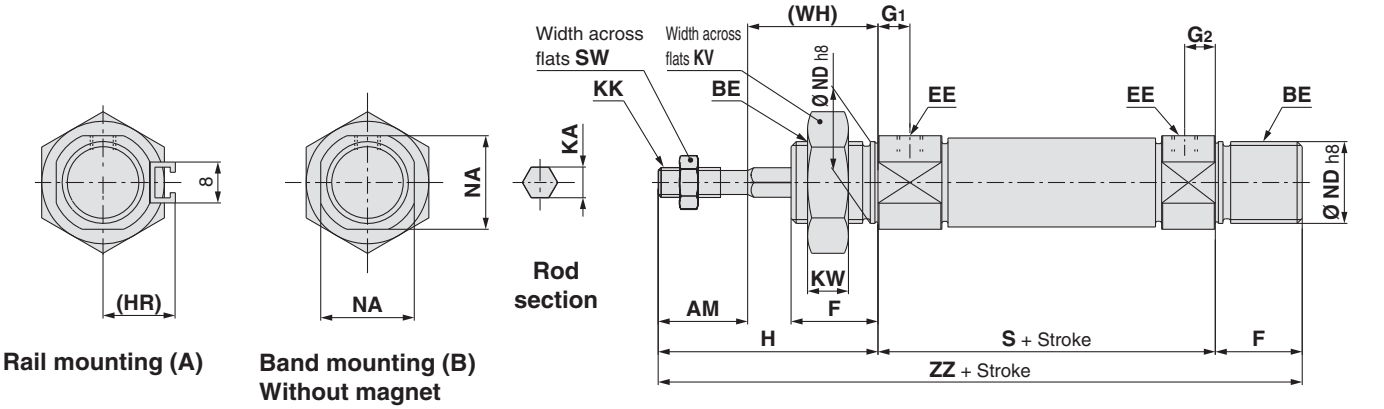

Dimensions

[mm]

Bore size	AM	BE	CD	EE	EW	F	G_1	G_2	H	(HR)	KA	KK	KV	KW	NA	ND	RR	S	SW	U	(WH)	(XC)	Z	ZZ
8	12	M12 x 1.25	4	M5 x 0.8	8	12	7	5	28	13.4	4.2	M4 x 0.7	19	6	15	12	10	46	7	6	16	64	76	86
10	12	M12 x 1.25	4	M5 x 0.8	8	12	7	5	28	14.2	4.2	M4 x 0.7	19	6	15	12	10	46	7	6	16	64	76	86
12	16	M16 x 1.5	6	M5 x 0.8	12	17	8	6	38	14.2	6.2	M6 x 1	24	8	18.3	16	14	50	10	9	22	75	91	105
16	16	M16 x 1.5	6	M5 x 0.8	12	17	8	6	38	14.2	6.2	M6 x 1	24	8	18.3	16	13	56	10	9	22	82	98	111
20	20	M22 x 1.5	8	G1/8	16	20	8	8	44	17	8.2	M8 x 1.25	32	11	24	22	11	62	13	12	24	95	115	126
25	22	M22 x 1.5	8	G1/8	16	22	8	8	50	20	10.2	M10 x 1.25	32	11	30	22	11	65	17	12	28	104	126	137

Refer to page 9 to 11 of Standard Type Single Rod for details of the mounting brackets, and refer to page 12 of Standard Type Single Rod for details of accessories (rod end, double knuckle joint, floating joint).

Dimensions

Boss-cut/Basic, Head cover axial port
Rubber bumper: C□85KF/Y Bore size – Stroke – □
Without magnet/Built-in magnet

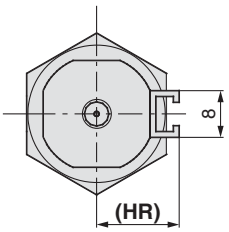

Head cover axial port

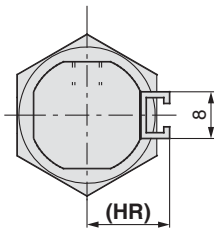

Boss-cut/Basic

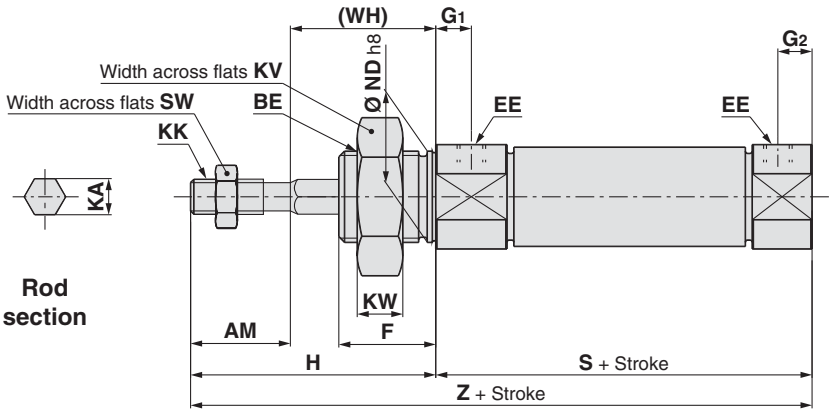

Rail mounting (A)

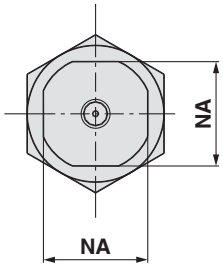

Head cover axial port

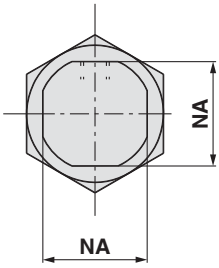

Boss-cut/Basic

Band mounting (B)
Without magnet

Dimensions

[mm]

Bore size	AM	BE	EE	F	G_1	G_2	H	(HR)	KA	KK	KV	KW	NA	ND	S	SW	(WH)	Z
8	12	M12 x 1.25	M5 x 0.8	12	7	5	28	13.4	4.2	M4 x 0.7	19	6	15	12	46	7	16	74
10	12	M12 x 1.25	M5 x 0.8	12	7	5	28	14.2	4.2	M4 x 0.7	19	6	15	12	46	7	16	74
12	16	M16 x 1.5	M5 x 0.8	17	8	6	38	14.2	6.2	M6 x 1	24	8	18.3	16	50	10	22	88
16	16	M16 x 1.5	M5 x 0.8	17	8	6	38	14.2	6.2	M6 x 1	24	8	18.3	16	50	10	22	88
20	20	M22 x 1.5	G1/8	20	8	8	44	17	8.2	M8 x 1.25	32	11	24	22	62	13	24	106
25	22	M22 x 1.5	G1/8	22	8	8	50	20	10.2	M10 x 1.25	32	11	30	22	65	17	28	115

Refer to page 9 to 11 of Standard Type Single Rod for details of the mounting brackets, and refer to page 12 of Standard Type Single Rod for details of accessories (rod end, double knuckle joint, floating joint).

Air Cylinder: Non-rotating Rod
Single Acting, Spring Return/Extend
C85K Series
Ø 8, Ø 10, Ø 12, Ø 16, Ø 20, Ø 25

RoHS

How to Order

Single acting, Spring return/extend

C D 85K N 20 – 40 S L V – B – M9BW S – ☐

Built-in magnet

—	None
D	Built-in magnet

Head cover type

N	Basic (Integrated clevis)
E	Double end boss-cut
F	Boss-cut/Basic
Y	Head cover axial port

Applicable head cover

Action	Head cover type			
	N	E	F	Y
Single acting, Spring return	●	●	●	●
Single acting, Spring extend	●	●	●	—

Bore size

8	8 mm
10	10 mm
12	12 mm
16	16 mm
20	20 mm
25	25 mm

Cylinder stroke [mm]
Refer to the next page for standard strokes.

Action

S	Single acting, Spring return
T	Single acting, Spring extend

Accessory∗1

—	None
V	Rod end
W	Double knuckle joint

∗1 Refer to Mounting Brackets/ Accessories on page 40 for details of accessories.
∗ Accessory is shipped together with the product.

Auto switch mounting type∗1

A	Rail mounting
B	Band mounting

∗1 The symbol is "—" for no magnet.

Mounting bracket∗1

—	None
L	Single foot
M	Double foot
G	Flange
U	Trunnion
N	Clevis

∗1 Refer to Mounting Brackets/Accessories on page 40 for details of mounting brackets.
∗ Mounting bracket is shipped together with the product.

Number of auto switches

—	2
S	1
n	n

Auto switch

—	Without auto switch

∗ For applicable auto switches, refer to the table below.
∗ Auto switches are shipped together with the product.

Made to order
For details, refer to page 39.

Applicable mounting bracket

Action	Head cover type	Mounting bracket				
		L	M	G	U	N
Single acting, Spring return	N	●	●	●	●	●
	E	●	●	●	●	—
	F	●	—	●	●	—
	Y	●	—	●	●	—
Single acting, Spring extend	N	●	●	●	●	●
	E	●	●	●	●	—
	F	●	—	●	●	—

Applicable Auto Switches/Refer to the **Auto Switch** Guide for further information.

Type	Special function	Electrical entry	Indicator light	Wiring (Output)	Load voltage DC	Load voltage AC	Auto switch model: Band mounting Perpendicular	Band mounting In-line	Rail mounting Perpendicular	Rail mounting In-line	Lead wire length [m] 0.5 (—)	1 (M)	3 (L)	5 (Z)	None (N)	Pre-wired connector	Applicable load	
Solid state auto switch	—	Grommet	Yes	3-wire (NPN)	5 V, 12 V	—	M9NV	M9N	M9NV	M9N	●	●	●	○	—	○	IC circuit	Relay, PLC
				3-wire (PNP)			M9PV	M9P	M9PV	M9P	●	●	●	○	—	○		
				2-wire	12 V		M9BV	M9B	M9BV	M9B	●	●	●	○	—	○	—	
		Connector					—	H7C	J79C	—	●	—	●	●	●	—		
	Diagnostic indication (2-colour indicator)	Grommet		3-wire (NPN)	5 V, 12 V		M9NWV	M9NW	M9NWV	M9NW	●	●	●	○	—	○	IC circuit	
				3-wire (PNP)			M9PWV	M9PW	M9PWV	M9PW	●	●	●	○	—	○		
				2-wire	12 V		M9BWV	M9BW	M9BWV	M9BW	●	●	●	○	—	○	—	
	Water resistant (2-colour indicator)			3-wire (NPN)	5 V, 12 V		M9NAV∗1	M9NA∗1	M9NAV∗1	M9NA∗1	○	○	●	○	—	○	IC circuit	
				3-wire (PNP)			M9PAV∗1	M9PA∗1	M9PAV∗1	M9PA∗1	○	○	●	○	—	○		
				2-wire	12 V		M9BAV∗1	M9BA∗1	M9BAV∗1	M9BA∗1	○	○	●	○	—	○	—	
	With diagnostic output (2-colour indicator)			4-wire (NPN)	5 V, 12 V		—	H7NF	—	F79F	●	—	●	○	—	○	IC circuit	
Reed auto switch	—	Grommet	Yes	3-wire (NPN equivalent)	5 V	—	A96V	A96	A96V	A96	●	—	●	—	—	—	IC circuit	—
				2-wire	—	200 V	—	—	A72	A72H	●	—	●	—	—	—	—	Relay, PLC
					24 V: 12 V	100 V	A93V∗2	A93	A93V∗2	A93	●	●	●	●	—	—		
			No			100 V or less	A90V	A90	A90V	A90	●	—	●	—	—	—	IC circuit	
			Yes			—	—	C73C	A73C	—	●	—	●	●	●	—	—	
		Connector	No			24 V or less	—	C80C	A80C	—	●	—	●	●	●	—	IC circuit	
	Diagnostic indication (2-colour indicator)	Grommet	Yes		—	—	—	—	A79W	—	●	—	●	—	—	—	—	

∗1 Water resistant type auto switches can be mounted on the above models, but SMC cannot guarantee water resistance. Please contact SMC regarding water resistant types with the above model numbers.
∗2 1 m lead wire is only applicable to the D-A93.
∗ Lead wire length symbols: 0.5 m····· — (Example) M9NW; 1 m····· M (Example) M9NWM; 3 m····· L (Example) M9NWL; 5 m····· Z (Example) M9NWZ; None····· N (Example) H7CN

∗ Since there are other applicable auto switches than listed above, refer to page 111 for details.
∗ Solid state auto switches marked with "○" are produced upon receipt of order.
∗ D-A9□/M9□/A7□/A80□/F7□/J7□ auto switches are shipped together, but not assembled. (For band mounting, only the auto switch mounting brackets are assembled before shipment.)
∗ When mounting a band on bore size Ø 8, Ø 10, or Ø 12, the D-A9□(V) cannot be mounted.
∗ When mounting a rail on bore size Ø 8, Ø 10, or Ø 12, the D-A9□(V) and A79W cannot be mounted.
∗ When mounting a rail on bore size Ø 20 or Ø 25, the D-M9□(V), M9□W(V), and M9□A(V) cannot be mounted.

Symbol

Single acting: Spring return, Rubber bumper

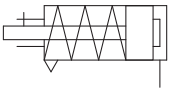

Single acting: Spring extend, Rubber bumper

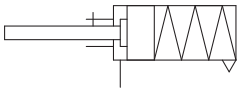

Refer to pages 101 to 111 for cylinders with auto switches.

- Auto Switch Proper Mounting Position (Detection at stroke end) and Mounting Height
- Minimum Stroke for Auto Switch Mounting
- Operating Range
- Auto Switch Mounting Brackets/Part No.

Made to Order
(For details, refer to pages 115 to 120.)

Symbol	Specifications
-XA	Change of rod end shape
-XC6□	Made of stainless steel

⚠ Precautions

Be sure to read this before handling the products. Refer to the back cover for safety instructions. For actuator and auto switch precautions, refer to the "Handling Precautions for SMC Products" and the "Operation Manual" on the SMC website: http://www.smc.eu

⚠ Caution

1. Avoid using the air cylinder in such a way that rotational torque would be applied to the piston rod.

If rotational torque is applied, the non-rotating guide will become deformed, thus affecting the non-rotating accuracy.
Refer to the table below for the approximate values of the allowable range of rotational torque.

Allowable rotational torque (N·m or less)	Ø 8	Ø 10	Ø 12	Ø 16	Ø 20	Ø 25
	0.02	0.04		0.2	0.25	

To screw a bracket or a nut onto the threaded portion at the tip of the piston rod, make sure to retract the piston rod entirely, and place a wrench over the flat portion of the rod that protrudes.
Tighten it by giving consideration to prevent the tightening torque from being applied to the non-rotating guide.

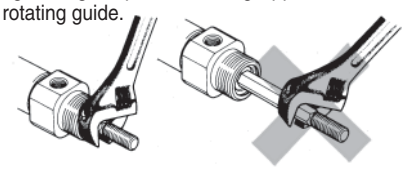

Specifications

Bore size [mm]	8	10	12	16	20	25
Type	Pneumatic					
Action	Single acting, Single rod					
Fluid	Air					
Proof pressure	1.5 MPa					
Max. operating pressure	1.0 MPa					
Min. operating pressure	0.22 MPa	0.18 MPa		0.13 MPa	Return: 0.18 MPa, Extend: 0.23 MPa	
Ambient and fluid temperature	Without auto switch: -20 °C to 80 °C (No freezing)					
	With auto switch: -10 °C to 60 °C (No freezing)					
Lubricant	Not required (Non-lube)					
Stroke length tolerance	$^{+1.0}_{0}$ mm				$^{+1.4}_{0}$ mm	
Piston speed	50 to 1500 mm/s					
Cushion	Rubber bumper					
Allowable kinetic energy	0.02 J	0.03 J	0.04 J	0.09 J	0.27 J	0.4 J
Non-rotating accuracy	±1.5°		±1°		±0.7°	

Standard Strokes

Bore size [mm]	Standard stroke [mm]*1	Max. stroke [mm]
8	10, 25, 50	50
10		
12		
16	10, 25, 50, 100, 150	150
20		
25		

*1 Other strokes are available on request. (Request based production)

Spring Retracting Force

Spring Return

[N]

Bore size [mm]	Standard stroke [mm]	Spring force									
		10		25		50		100		150	
		Rod extended	Rod retracted	Rod extended	Rod retracted	Rod extended	Rod retracted	Rod extended	Rod retracted	Rod extended	Rod retracted
8	10, 25, 50	4.4	4.0	4.4	3.4	4.4	2.5	—	—	—	—
10		6.3	5.7	6.3	4.9	6.3	3.5	—	—	—	—
12		7.2	6.6	7.2	5.8	7.2	4.4	—	—	—	—
16	10, 25, 50, 100, 150	13.2	12.1	13.2	10.3	13.2	7.5	13.2	7.5	13.2	7.5
20		21.6	18.6	21.6	16.7	21.6	11.8	39.2	9.8	39.2	9.8
25		27.5	25.3	27.5	22.1	27.5	16.7	47.1	13.7	47.1	15.7

Spring Extend

[N]

Bore size [mm]	Standard stroke [mm]	Spring force									
		10		25		50		100		150	
		Rod retracted	Rod extended	Rod retracted	Rod extended	Rod retracted	Rod extended	Rod retracted	Rod extended	Rod retracted	Rod extended
8	10, 25, 50	5.3	3.9	5.3	3.1	5.3	2.7	—	—	—	—
10		6.0	4.8	6.0	4.0	6.0	3.5	—	—	—	—
12		6.6	5.6	6.6	4.9	6.6	4.5	—	—	—	—
16	10, 25, 50, 100, 150	14.7	11.3	14.7	9.2	14.7	7.9	14.7	7.9	14.7	7.9
20		39.2	33.0	39.2	23.5	39.2	9.8	39.2	9.8	39.2	9.8
25		47.1	40.4	47.1	30.4	47.1	13.7	47.1	13.7	47.1	15.7

Option: Ordering Example of Cylinder Assembly

Cylinder model: CD85KN20-50SNW-B-M9BW

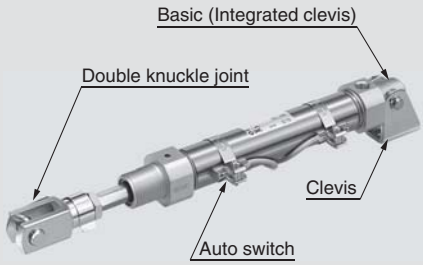

Head cover N: Basic (Integrated clevis)
Mounting bracket N: Clevis
Rod end bracket W: Double knuckle joint
Auto switch D-M9BW: Band mounting, 2 pcs.

* Mounting bracket, double knuckle joint, and auto switch are shipped together with the product.

Mounting Brackets/Accessories

Mounting bracket/Accessory			Standard (mounted to the body)		Mounting bracket (shipped together)							Accessory (shipped together)	
			Mounting nut	Rod end nut	Mounting nut	Foot	Flange	Trunnion	Clevis pivot bracket	Clevis pin	Pin retaining ring	Rod end	Double knuckle joint
Mounting bracket symbol	L	Single foot	● (1 pc.)	● (1 pc.)	—	● (1 pc.)	—	—	—	—	—	—	—
	M	Double foot	● (1 pc.)	● (1 pc.)	● (1 pc.)	● (2 pcs.)	—	—	—	—	—	—	—
	G	Flange	● (1 pc.)	● (1 pc.)	—	—	● (1 pc.)	—	—	—	—	—	—
	U	Trunnion	● (1 pc.)	● (1 pc.)	—	—	—	● (1 pc.)	—	—	—	—	—
	N	Clevis	● (1 pc.)	● (1 pc.)	—	—	—	—	● (1 pc.)	● (1 pc.)	● (2 pcs.)	—	—
Accessory symbol	V	Rod end	● (1 pc.)	● (1 pc.)	—	—	—	—	—	—	—	● (1 pc.)	—
	W	Double knuckle joint	● (1 pc.)	● (1 pc.)	—	—	—	—	—	—	—	—	● (1 pc.)

Mounting Bracket/Accessory Part Nos.

Mounting bracket/Accessory		Bore size [mm]						Contents
		8	10	12	16	20	25	
Mounting bracket	Rod end nut	C85NT10		C85NT16		C85NT20	C85NT25	1 rod end nut
	Mounting nut	C85SN10		C85SN16		C85SN25		1 mounting nut
	Foot (1 pc.)	C85L10A		C85L16A		C85L25A		1 foot
	Foot (2 pcs. with 1 mounting nut)	C85L10B		C85L16B		C85L25B		2 foots, 1 mounting nut
	Foot (1 pc. with 1 mounting nut)	C85L10C		C85L16C		C85L25C		1 foot, 1 mounting nut
	Flange	C85F10		C85F16		C85F25		1 flange
	Trunnion	C85T10		C85T16		C85T25		1 trunnion
	Clevis	C85C10		C85C16		C85C25		1 clevis pivot bracket, 1 clevis pin, 2 pin retaining rings
Accessory	Rod end	KJ4D		KJ6D		KJ8D	KJ10D	1 rod end
	Double knuckle joint	GKM4-8		GKM6-12		GKM8-16	GKM10-20	1 double knuckle joint
	Floating joint	JA10-4-070		JA15-6-100		JA20-8-125	JA30-10-125	1 floating joint

∗ Refer to page 12 for dimensions of accessories.

Replacement Parts: For Non-rotating Rod Type (K) (Only for single acting, spring extend)

Bore size [mm]	Part no.	Note
20	C85K-20PS	Every set includes: 1 rod seal 1 flat washer 1 retaining ring
25	C85K-25PS	

∗ When replacing the seals, use **grease (GR-S-010: ordered separately)** on the sliding parts.
In the single acting, spring return type, there is no rod seal so it is not possible to replace any seals.

Weights

Single Acting, Spring Return (S)

[g]

Bore size [mm]				8	10	12	16	20	25
Basic weight	Without magnet	1 to 50 mm stroke	C85KN□-□S	42	47	92	116	228	309
			C85KE□-□S	44	49	95	120	233	314
			C85KF□-□S	40	46	86	106	213	292
			C85KY□-□S	41	46	86	107	214	293
		51 to 100 mm stroke	C85KN□-□S	—	—	—	154	264	361
			C85KE□-□S	—	—	—	157	269	366
			C85KF□-□S	—	—	—	144	249	344
			C85KY□-□S	—	—	—	144	250	345
		101 to 150 mm stroke	C85KN□-□S	—	—	—	191	302	415
			C85KE□-□S	—	—	—	194	307	420
			C85KF□-□S	—	—	—	181	287	397
			C85KY□-□S	—	—	—	181	287	398
	With magnet	1 to 50 mm stroke	CD85KN□-□S	44	49	94	120	231	313
			CD85KE□-□S	46	51	98	124	237	318
			CD85KF□-□S	43	48	89	110	216	296
			CD85KY□-□S	43	48	89	110	217	297
		51 to 100 mm stroke	CD85KN□-□S	—	—	—	158	268	365
			CD85KE□-□S	—	—	—	161	273	370
			CD85KF□-□S	—	—	—	148	252	348
			CD85KY□-□S	—	—	—	148	253	349
		101 to 150 mm stroke	CD85KN□-□S	—	—	—	195	305	418
			CD85KE□-□S	—	—	—	198	310	423
			CD85KF□-□S	—	—	—	185	290	401
			CD85KY□-□S	—	—	—	185	291	402
Additional weight per 10 mm of stroke				2.3	2.5	4.5	5.5	8.7	12.2
Mounting bracket	Foot (1 pc.)		C85L□A	20		40		95	
	Foot (2 pcs. with 1 mounting nut)		C85L□B	55		105		210	
	Flange		C85F□	12		25		90	
	Trunnion		C85T□	20		50		75	
	Clevis		C85C□	20		40		85	
Accessory	Rod end		KJ□D	17		25		45	70
	Double knuckle joint		GKM□-□	10		20		50	100
	Floating joint		JA□-□-□	10		20		50	70

Calculation example: **C85KN20-50SNV**
- Basic weight ····· 228 g (Ø 20)
- Additional weight ··· 8.7 g (at 10 mm stroke)
- Cylinder stroke ····· 50 mm
- Mounting bracket: Clevis ··· 85 g
- Accessory: Rod end ····· 45 g

228 + 8.7 x 50/10 + 85 + 45 ≈ **402 g**

Single Acting, Spring Extend (T)

[g]

Bore size [mm]				8	10	12	16	20	25
Basic weight	Without magnet	1 to 50 mm stroke	C85KN□-□T	43	49	93	119	214	285
			C85KE□-□T	45	51	96	123	218	290
			C85KF□-□T	42	47	87	109	199	268
		51 to 100 mm stroke	C85KN□-□T	—	—	—	149	238	319
			C85KE□-□T	—	—	—	153	243	324
			C85KF□-□T	—	—	—	140	223	302
		101 to 150 mm stroke	C85KN□-□T	—	—	—	180	265	355
			C85KE□-□T	—	—	—	184	269	360
			C85KF□-□T	—	—	—	170	249	338
	With magnet	1 to 50 mm stroke	CD85KN□-□T	46	51	96	123	217	289
			CD85KE□-□T	48	53	99	127	222	294
			CD85KF□-□T	44	49	90	113	202	272
		51 to 100 mm stroke	CD85KN□-□T	—	—	—	154	242	323
			CD85KE□-□T	—	—	—	157	247	328
			CD85KF□-□T	—	—	—	144	227	306
		101 to 150 mm stroke	CD85KN□-□T	—	—	—	184	268	359
			CD85KE□-□T	—	—	—	188	273	364
			CD85KF□-□T	—	—	—	174	253	341
Additional weight per 10 mm of stroke				2.3	2.5	4.5	5.5	8.7	12.2
Mounting bracket	Foot (1 pc.)		C85L□A	20		40		95	
	Foot (2 pcs. with 1 mounting nut)		C85L□B	55		105		210	
	Flange		C85F□	12		25		90	
	Trunnion		C85T□	20		50		75	
	Clevis		C85C□	20		40		85	
Accessory	Rod end		KJ□D	17		25		45	70
	Double knuckle joint		GKM□-□	10		20		50	100
	Floating joint		JA□-□-□	10		20		50	70

Calculation example: **C85KN20-50TNV**
- Basic weight ····· 214 g (Ø 20)
- Additional weight ··· 8.7 g (at 10 mm stroke)
- Cylinder stroke ····· 50 mm
- Mounting bracket: Clevis ··· 85 g
- Accessory: Rod end ····· 45 g

214 + 8.7 x 50/10 + 85 + 45 ≈ **388 g**

Dimensions: Single Acting, Spring Return

Basic (Integrated clevis)

C□85KN Bore size – Stroke S – □

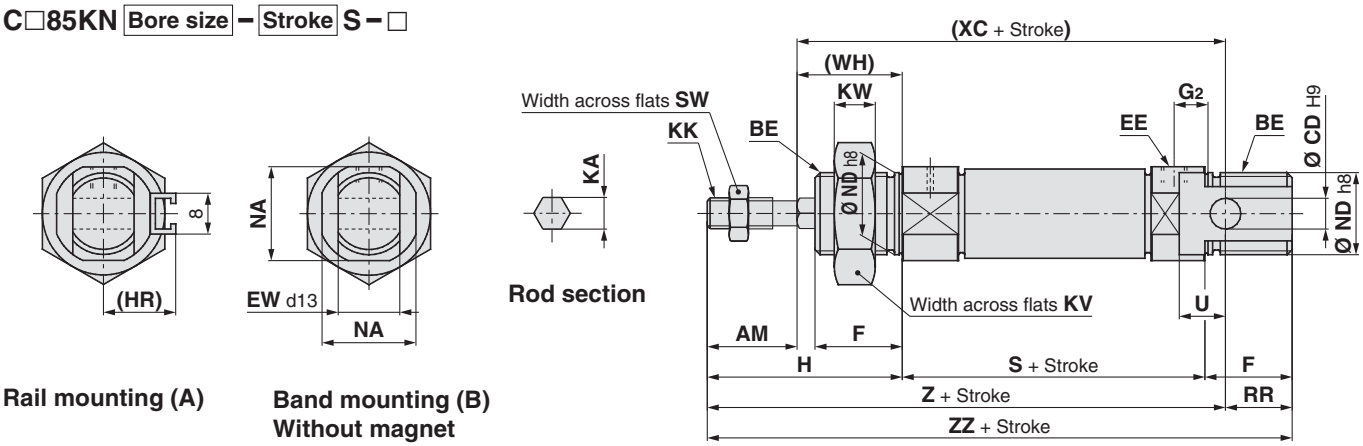

Rail mounting (A)

Band mounting (B)
Without magnet

Double end boss-cut

C□85KE Bore size – Stroke S – □

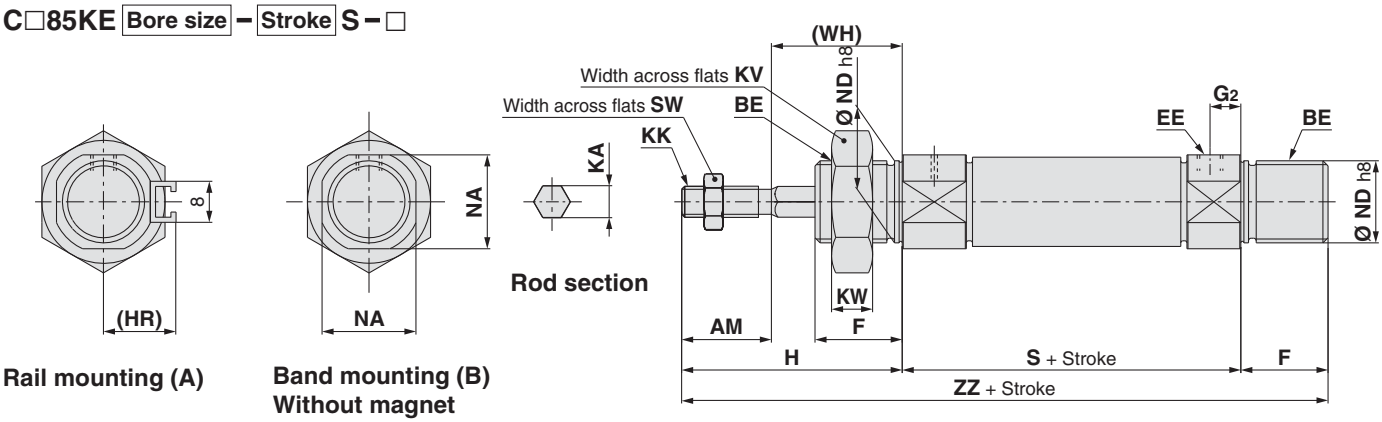

Rail mounting (A)

Band mounting (B)
Without magnet

Dimensions

[mm]

Bore size	AM	BE	CD	EE	EW	F	G_2	H	(HR)	KA	KK	KV	KW	NA	ND	RR	SW	U	(WH)
8	12	M12 x 1.25	4	M5 x 0.8	8	12	5	28	13.4	4.2	M4 x 0.7	19	6	15	12	10	7	6	16
10	12	M12 x 1.25	4	M5 x 0.8	8	12	5	28	14.2	4.2	M4 x 0.7	19	6	15	12	10	7	6	16
12	16	M16 x 1.5	6	M5 x 0.8	12	17	6	38	14.2	6.2	M6 x 1	24	8	18.3	16	14	10	9	22
16	16	M16 x 1.5	6	M5 x 0.8	12	17	6	38	14.2	6.2	M6 x 1	24	8	18.3	16	13	10	9	22
20	20	M22 x 1.5	8	G1/8	16	20	8	44	17	8.2	M8 x 1.25	32	11	24	22	11	13	12	24
25	22	M22 x 1.5	8	G1/8	16	22	8	50	20	10.2	M10 x 1.25	32	11	30	22	11	17	12	28

Bore size	S			(XC)			Z			ZZ		
	1 to 50	51 to 100	101 to 150	1 to 50	51 to 100	101 to 150	1 to 50	51 to 100	101 to 150	1 to 50	51 to 100	101 to 150
8	56 (62)	—	—	74 (80)	—	—	86 (92)	—	—	96 (102)	—	—
10	56 (60)	—	—	74 (78)	—	—	86 (90)	—	—	96 (100)	—	—
12	60 (63.5)	—	—	85 (88.5)	—	—	101 (104.5)	—	—	115 (118.5)	—	—
16	66 (69.5)	92 (95.5)	118 (121.5)	92 (95.5)	118 (121.5)	144 (147.5)	108 (111.5)	134 (137.5)	160 (163.5)	121 (124.5)	147 (150.5)	173 (176.5)
20	87	112	137	120	145	170	140	165	190	151	176	201
25	88.5	113.5	138.5	127.5	152.5	177.5	149.5	174.5	199.5	160.5	185.5	210.5

( ): For built-in magnet

Refer to page 12 of Standard Type Single Rod for details of accessories (rod end, double knuckle joint, floating joint).

Dimensions: Single Acting, Spring Return

Boss-cut/Basic, Head cover axial port

C□85KF/Y Bore size – Stroke S – □

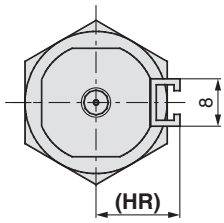

Head cover axial port

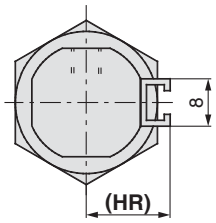

Boss-cut/Basic

Rail mounting (A)

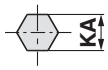

Rod section

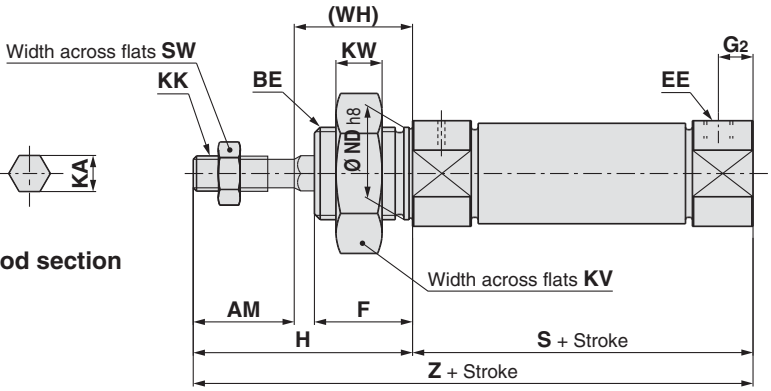

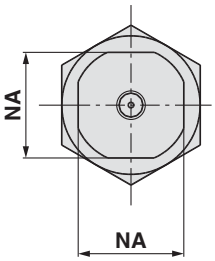

Head cover axial port

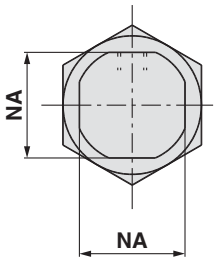

Boss-cut/Basic

Band mounting (B)
Without magnet

Dimensions

[mm]

Bore size	AM	BE	EE	F	G_2	H	(HR)	KA	KK	KV	KW	NA	ND	SW	(WH)
8	12	M12 x 1.25	M5 x 0.8	12	5	28	13.4	4.2	M4 x 0.7	19	6	15	12	7	16
10	12	M12 x 1.25	M5 x 0.8	12	5	28	14.2	4.2	M4 x 0.7	19	6	15	12	7	16
12	16	M16 x 1.5	M5 x 0.8	17	6	38	14.2	6.2	M6 x 1	24	8	18.3	16	10	22
16	16	M16 x 1.5	M5 x 0.8	17	6	38	14.2	6.2	M6 x 1	24	8	18.3	16	10	22
20	20	M22 x 1.5	G1/8	20	8	44	17	8.2	M8 x 1.25	32	11	24	22	13	24
25	22	M22 x 1.5	G1/8	22	8	50	20	10.2	M10 x 1.25	32	11	30	22	17	28

Bore size	S			Z		
	1 to 50	51 to 100	101 to 150	1 to 50	51 to 100	101 to 150
8	56 (62)	—	—	84 (90)	—	—
10	56 (60)	—	—	84 (88)	—	—
12	60 (63.5)	—	—	98 (101.5)	—	—
16	60 (63.5)	86 (89.5)	112 (115.5)	98 (101.5)	124 (127.5)	150 (153.5)
20	87	112	137	131	156	181
25	88.5	113.5	138.5	138.5	163.5	188.5

( ): For built-in magnet

Refer to page 12 of Standard Type Single Rod for details of accessories (rod end, double knuckle joint, floating joint).

Dimensions: Single Acting, Spring Return

Bracket is shipped together with the product.

Single foot: C□85KN□−□SL
(With mounting bracket)

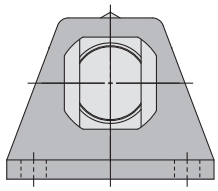

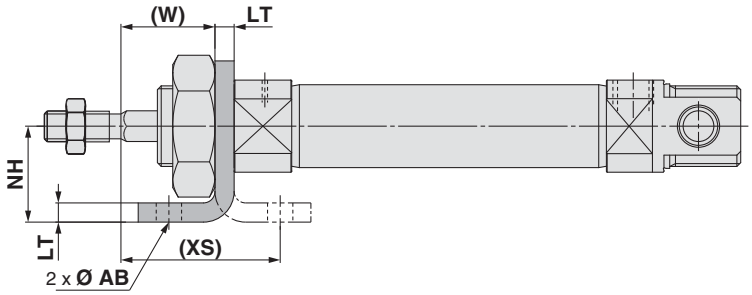

Double foot: C□85KN□−□SM
(With mounting bracket)

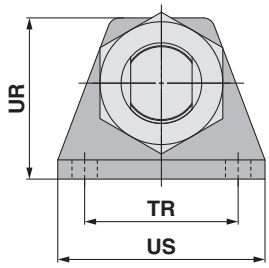

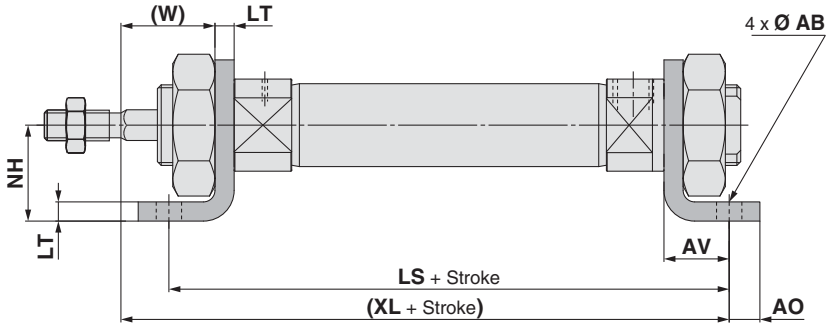

[mm]

Bore size	AB	AO	AV	LS			LT	NH	TR$_{Js14}$	UR	US	(W)	(XL)			(XS)
				1 to 50	51 to 100	101 to 150							1 to 50	51 to 100	101 to 150	
8	4.5	5	11	78 (84)	—	—	3.2	16	25	26	35	12.8	83 (89)	—	—	23.8
10	4.5	5	11	78 (82)	—	—	3.2	16	25	26	35	12.8	83 (87)	—	—	23.8
12	5.5	6	14	88 (91.5)	—	—	4	20	32	33	42	18	96 (99.5)	—	—	32
16	5.5	6	14	94 (97.5)	120 (123.5)	146 (149.5)	4	20	32	33	42	18	102 (105.5)	128 (131.5)	154 (157.5)	32
20	6.6	8	17	121	146	171	5	25	40	42	54	19	128	153	178	36
25	6.6	8	17	122.5	147.5	172.5	5	25	40	42	54	23	133.5	158.5	183.5	40

( ): For built-in magnet

Refer to page 12 of Standard Type Single Rod for details of accessories (rod end, double knuckle joint, floating joint).

Dimensions: Single Acting, Spring Return

Bracket is shipped together with the product.

Rod flange: C□85KN□−□SG
(With mounting bracket)

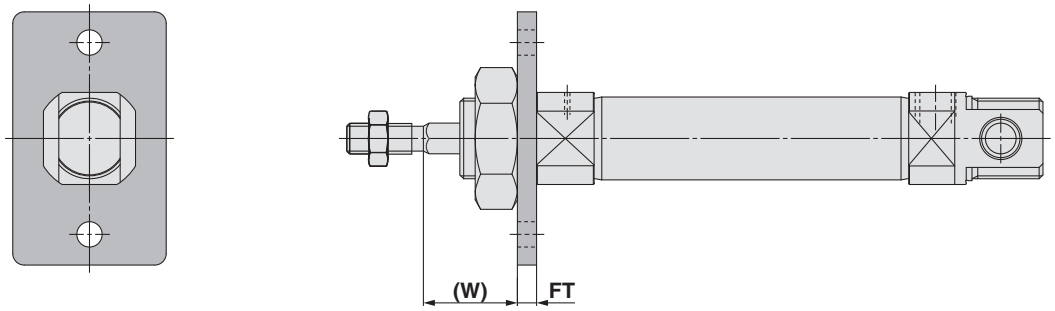

Head flange: C□85KN□−□SG
(With mounting bracket)

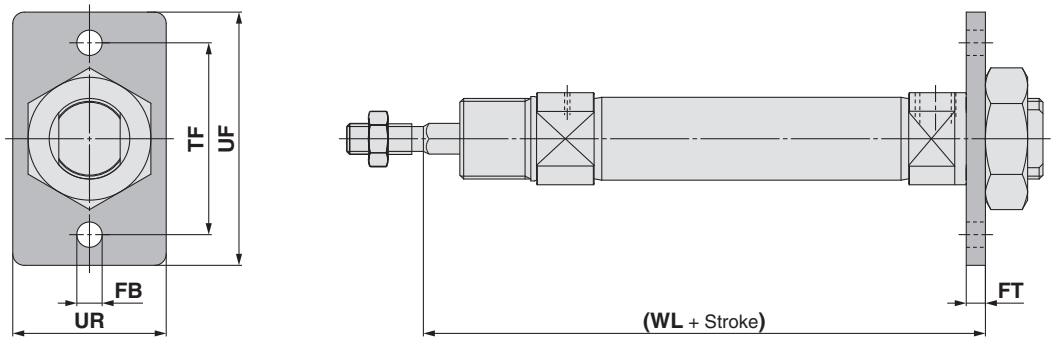

[mm]

Bore size	FB_{H13}	FT	TF	UF	UR	(W)	(WL)		
							1 to 50	51 to 100	101 to 150
8	4.5	3.2	30	40	22	12.8	75.2 (81.2)	—	—
10	4.5	3.2	30	40	22	12.8	75.2 (79.2)	—	—
12	5.5	4	40	52	30	18	86 (89.5)	—	—
16	5.5	4	40	52	30	18	92 (95.5)	118 (121.5)	144 (147.5)
20	6.6	5	50	66	40	19	116	141	166
25	6.6	5	50	66	40	23	121.5	146.5	171.5

( ): For built-in magnet

Refer to page 12 of Standard Type Single Rod for details of accessories (rod end, double knuckle joint, floating joint).

Dimensions: Single Acting, Spring Return

Bracket is shipped together with the product.

Rod trunnion: C□85KN□−□SU (With mounting bracket)

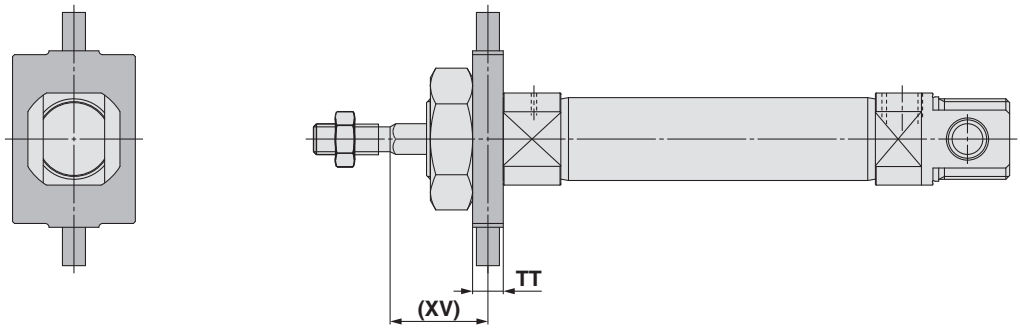

Head trunnion: C□85KN□−□SU (With mounting bracket)

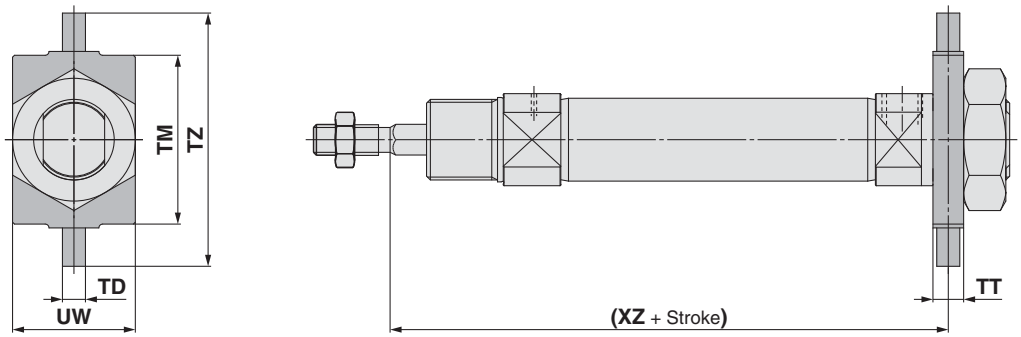

[mm]

Bore size	TD$_{e8}$	TM	TT	TZ	UW	(XV)	(XZ)		
							1 to 50	51 to 100	101 to 150
8	4	26	6	38	20	13	75 (81)	—	—
10	4	26	6	38	20	13	75 (79)	—	—
12	6	38	8	58	25	18	86 (89.5)	—	—
16	6	38	8	58	25	18	92 (95.5)	118 (121.5)	144 (147.5)
20	6	46	8	66	32	20	115	140	165
25	6	46	8	66	32	24	120.5	145.5	170.5

( ): For built-in magnet

Clevis: C□85KN□−□SN (With mounting bracket)

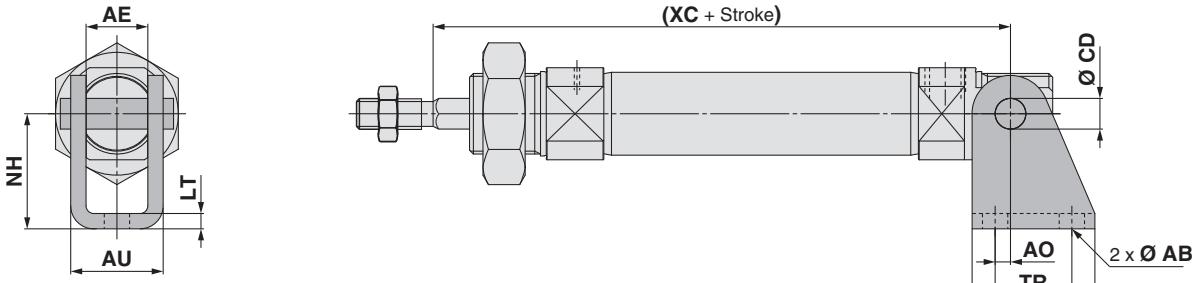

[mm]

Bore size	AB	AE	AO	AU	CD$_{H9}$	LG	LT	NH	TR	(XC)		
										1 to 50	51 to 100	101 to 150
8	4.5	8.1	1.5	13.1	4	20	2.5	24	12.5	74 (80)	—	—
10	4.5	8.1	1.5	13.1	4	20	2.5	24	12.5	74 (78)	—	—
12	5.5	12.1	2	18.5	6	25	3.2	27	15	85 (88.5)	—	—
16	5.5	12.1	2	18.5	6	25	3.2	27	15	92 (95.5)	118 (121.5)	144 (147.5)
20	6.6	16.1	4	24.1	8	32	4	30	20	120	145	170
25	6.6	16.1	4	24.1	8	32	4	30	20	127.5	152.5	177.5

( ): For built-in magnet

Refer to page 12 of Standard Type Single Rod for details of accessories (rod end, double knuckle joint, floating joint).

Dimensions: Single Acting, Spring Extend

Basic (Integrated clevis)

C□85KN Bore size – Stroke T – □

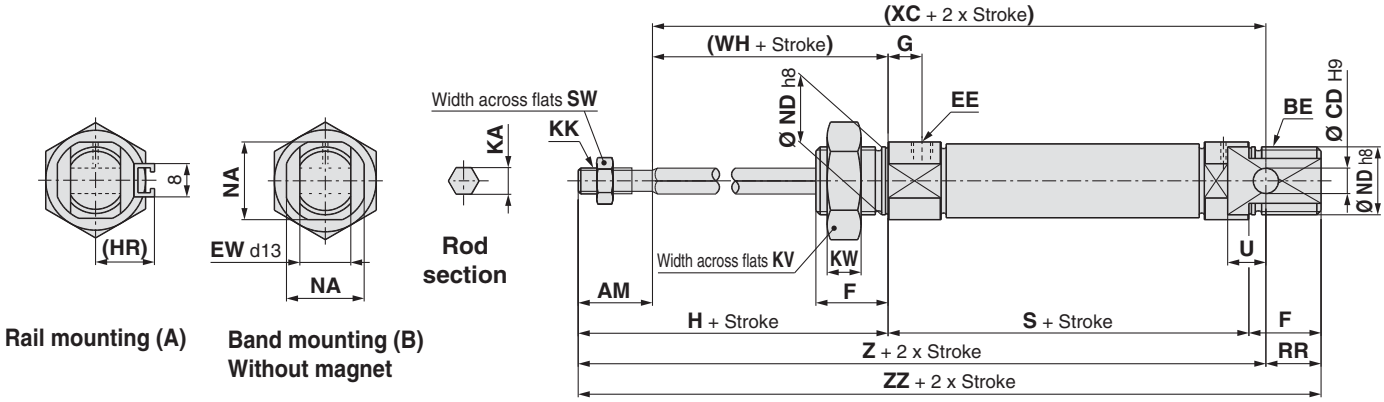

Double end boss-cut

C□85KE Bore size – Stroke T – □

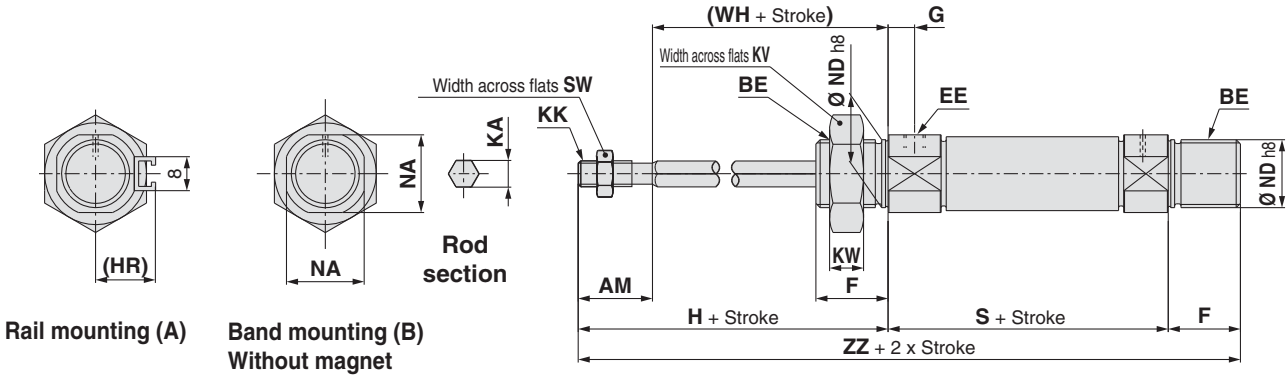

Dimensions

[mm]

Bore size	AM	BE	CD	EE	EW	F	G	H	(HR)	KA	KK	KV	KW	NA	ND	RR	SW	U	(WH)
8	12	M12 x 1.25	4	M5 x 0.8	8	12	7	28	13.4	4.2	M4 x 0.7	19	6	15	12	10	7	6	16
10	12	M12 x 1.25	4	M5 x 0.8	8	12	7	28	14.2	4.2	M4 x 0.7	19	6	15	12	10	7	6	16
12	16	M16 x 1.5	6	M5 x 0.8	12	17	8	38	14.2	6.2	M6 x 1	24	8	18.3	16	14	10	9	22
16	16	M16 x 1.5	6	M5 x 0.8	12	17	8	38	14.2	6.2	M6 x 1	24	8	18.3	16	13	10	9	22
20	20	M22 x 1.5	8	G1/8	16	20	8	44	17	8.2	M8 x 1.25	32	11	24	22	11	13	12	24
25	22	M22 x 1.5	8	G1/8	16	22	8	50	20	10.2	M10 x 1.25	32	11	30	22	11	17	12	28

Bore size	S			(XC)			Z			ZZ		
	1 to 50	51 to 100	101 to 150	1 to 50	51 to 100	101 to 150	1 to 50	51 to 100	101 to 150	1 to 50	51 to 100	101 to 150
8	64.5 (70.5)	—	—	82.5 (88.5)	—	—	94.5 (100.5)	—	—	104.5 (110.5)	—	—
10	64.5 (68.5)	—	—	82.5 (86.5)	—	—	94.5 (98.5)	—	—	104.5 (108.5)	—	—
12	70 (73.5)	—	—	95 (98.5)	—	—	111 (114.5)	—	—	125 (128.5)	—	—
16	75 (78.5)	101 (104.5)	127 (130.5)	101 (104.5)	127 (130.5)	153 (156.5)	117 (120.5)	143 (146.5)	169 (172.5)	130 (133.5)	156 (159.5)	182 (185.5)
20	87	112	137	120	145	170	140	165	190	151	176	201
25	88.5	113.5	138.5	127.5	152.5	177.5	149.5	174.5	199.5	160.5	185.5	210.5

( ): For built-in magnet

Refer to page 12 of Standard Type Single Rod for details of accessories (rod end, double knuckle joint, floating joint).

Dimensions: Single Acting, Spring Extend

Boss-cut/Basic

C□85KF Bore size – Stroke T – □

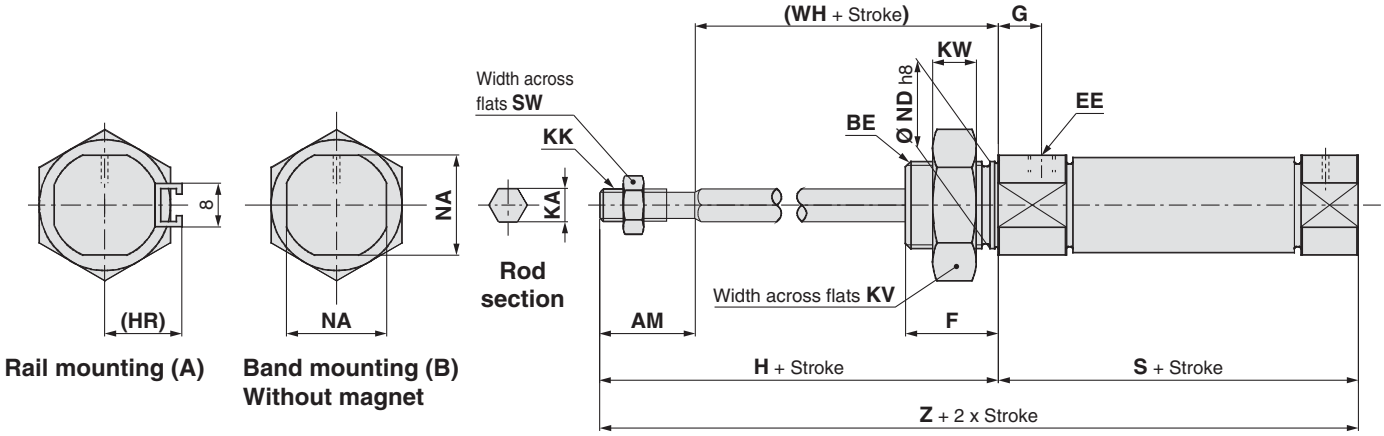

Rail mounting (A)

Band mounting (B)
Without magnet

Dimensions

[mm]

Bore size	AM	BE	EE	F	G	H	(HR)	KA	KK	KV	KW	NA	ND	SW	(WH)
8	12	M12 x 1.25	M5 x 0.8	12	7	28	13.4	4.2	M4 x 0.7	19	6	15	12	7	16
10	12	M12 x 1.25	M5 x 0.8	12	7	28	14.2	4.2	M4 x 0.7	19	6	15	12	7	16
12	16	M16 x 1.5	M5 x 0.8	17	8	38	14.2	6.2	M6 x 1	24	8	18.3	16	10	22
16	16	M16 x 1.5	M5 x 0.8	17	8	38	14.2	6.2	M6 x 1	24	8	18.3	16	10	22
20	20	M22 x 1.5	G1/8	20	8	44	17	8.2	M8 x 1.25	32	11	24	22	13	24
25	20	M22 x 1.5	G1/8	22	8	50	20	10.2	M10 x 1.25	32	11	30	22	17	28

Bore size	S			Z		
	1 to 50	51 to 100	101 to 150	1 to 50	51 to 100	101 to 150
8	64.5 (70.5)	—	—	92.5 (98.5)	—	—
10	64.5 (68.5)	—	—	92.5 (96.5)	—	—
12	70 (73.5)	—	—	108 (111.5)	—	—
16	69 (72.5)	95 (98.5)	121 (124.5)	107 (110.5)	133 (136.5)	159 (162.5)
20	87	112	137	131	156	181
25	88.5	113.5	138.5	138.5	163.5	188.5

( ): For built-in magnet

Refer to page 12 of Standard Type Single Rod for details of accessories (rod end, double knuckle joint, floating joint).

Dimensions: Single Acting, Spring Extend

Bracket is shipped together with the product.

Single foot: C□85KN□−□TL
(With mounting bracket)

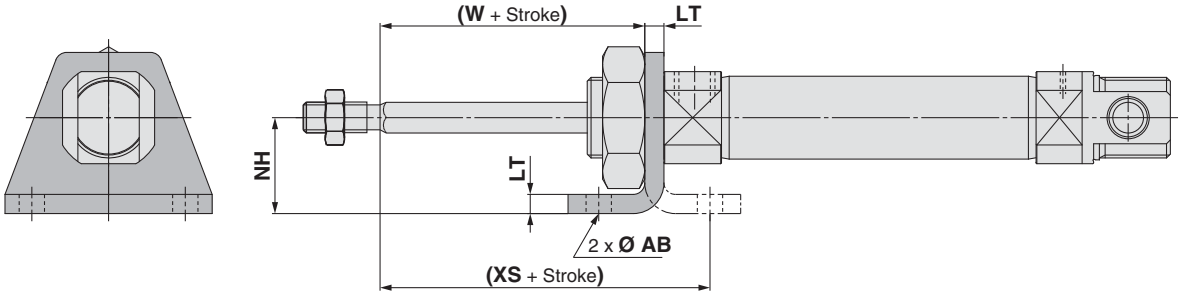

Double foot: C□85KN□−□TM
(With mounting bracket)

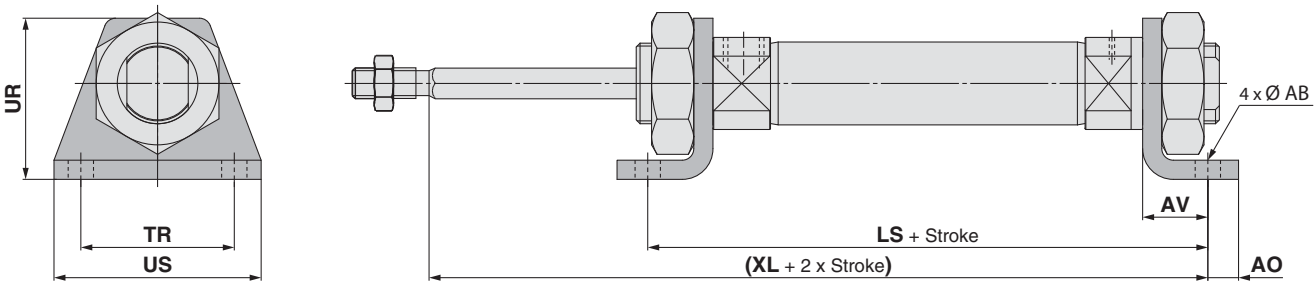

[mm]

Bore size	AB	AO	AV	LS			LT	NH	TR$_{Js14}$	UR	US	(W)	(XS)	(XL)		
				1 to 50	51 to 100	101 to 150								1 to 50	51 to 100	101 to 150
8	4.5	5	11	86.5 (92.5)	—	—	3.2	16	25	26	35	12.8	23.8	91.5 (97.5)	—	—
10	4.5	5	11	86.5 (90.5)	—	—	3.2	16	25	26	35	12.8	23.8	91.5 (95.5)	—	—
12	5.5	6	14	98 (101.5)	—	—	4	20	32	33	42	18	32	106 (109.5)	—	—
16	5.5	6	14	103 (106.5)	129 (132.5)	155 (158.5)	4	20	32	33	42	18	32	111 (114.5)	137 (140.5)	163 (166.5)
20	6.6	8	17	121	146	171	5	25	40	42	54	19	36	128	153	178
25	6.6	8	17	122.5	147.5	172.5	5	25	40	42	54	23	40	133.5	158.5	183.5

( ): For built-in magnet

Refer to page 12 of Standard Type Single Rod for details of accessories (rod end, double knuckle joint, floating joint).

Dimensions: Single Acting, Spring Extend

Bracket is shipped together with the product.

Rod flange: C□85KN□−□TG
(With mounting bracket)

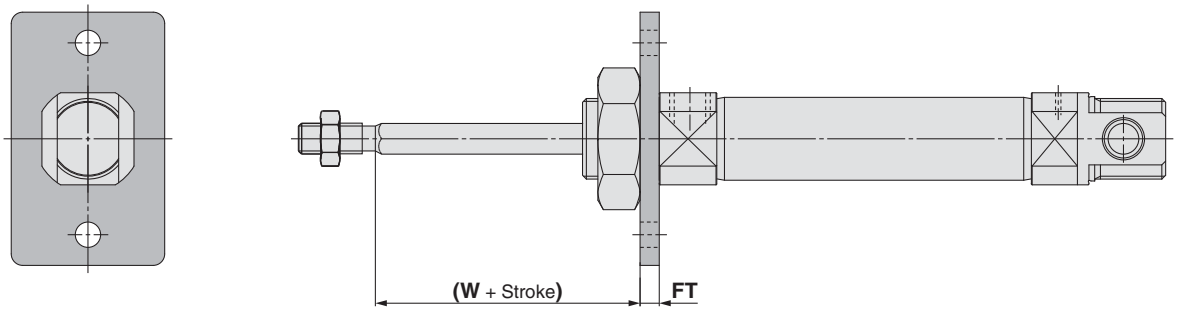

Head flange: C□85KN□−□TG
(With mounting bracket)

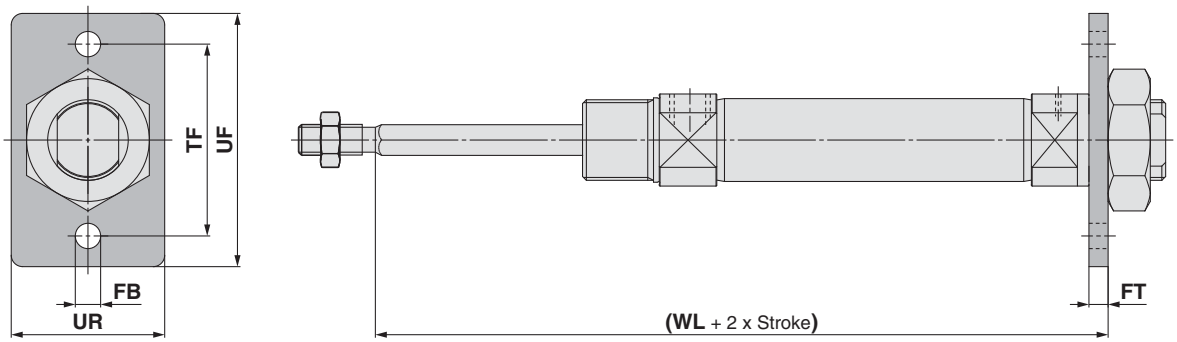

[mm]

Bore size	FB H13	FT	TF	UF	UR	(W)	(WL)		
							1 to 50	51 to 100	101 to 150
8	4.5	3.2	30	40	22	12.8	83.7 (89.7)	—	—
10	4.5	3.2	30	40	22	12.8	83.7 (87.7)	—	—
12	5.5	4	40	52	30	18	96 (99.5)	—	—
16	5.5	4	40	52	30	18	101 (104.5)	127 (130.5)	153 (156.5)
20	6.6	5	50	66	40	19	116	141	166
25	6.6	5	50	66	40	23	121.5	146.5	171.5

( ): For built-in magnet

Refer to page 12 of Standard Type Single Rod for details of accessories (rod end, double knuckle joint, floating joint).

Dimensions: Single Acting, Spring Extend

Bracket is shipped together with the product.

Rod trunnion: C□85KN□−□TU
(With mounting bracket)

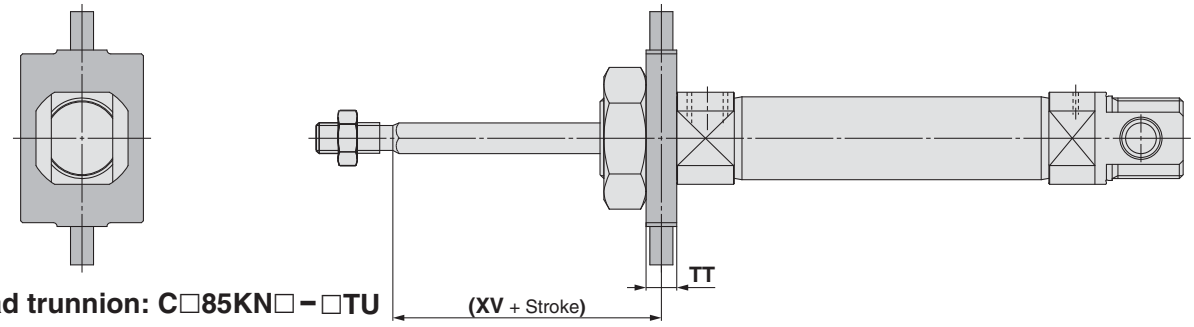

Head trunnion: C□85KN□−□TU
(With mounting bracket)

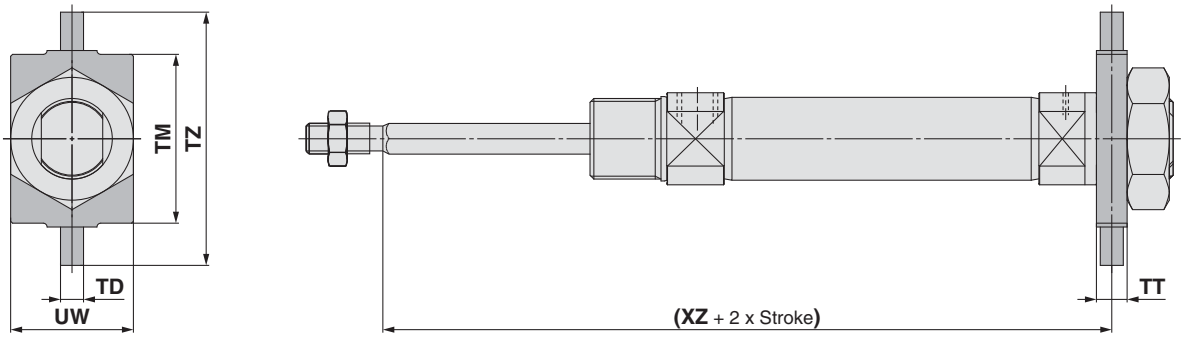

[mm]

Bore size	TD e8	TM	TT	TZ	UW	(XV)	(XZ)		
							1 to 50	51 to 100	101 to 150
8	4	26	6	38	20	13	83.5 (89.5)	—	—
10	4	26	6	38	20	13	83.5 (87.5)	—	—
12	6	38	8	58	25	18	96 (99.5)	—	—
16	6	38	8	58	25	18	101 (104.5)	127 (130.5)	153 (156.5)
20	6	46	8	66	32	20	115	140	165
25	6	46	8	66	32	24	120.5	145.5	170.5

( ): For built-in magnet

Clevis: C□85KN□−□TN
(With mounting bracket)

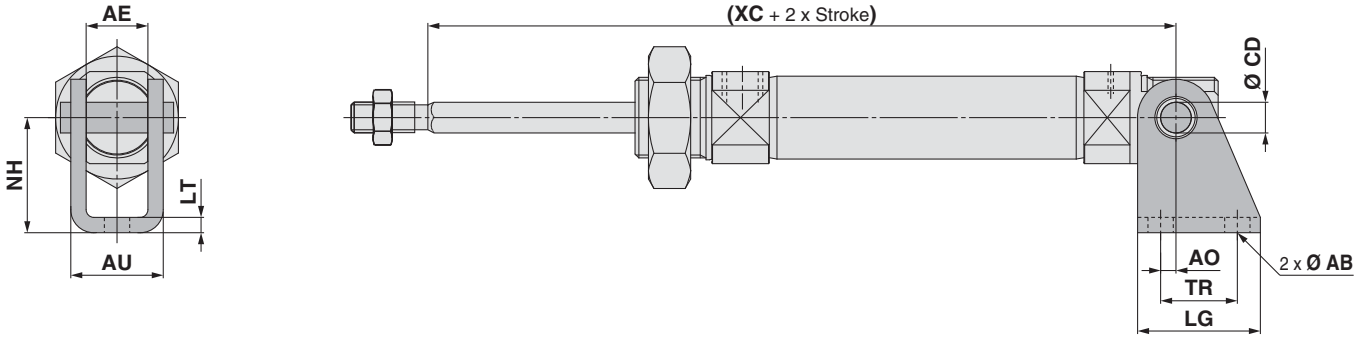

[mm]

Bore size	AB	AE	AO	AU	CD H9	LG	LT	NH	TR	(XC)		
										1 to 50	51 to 100	101 to 150
8	4.5	8.1	1.5	13.1	4	20	2.5	24	12.5	82.5 (88.5)	—	—
10	4.5	8.1	1.5	13.1	4	20	2.5	24	12.5	82.5 (86.5)	—	—
12	5.5	12.1	2	18.5	6	25	3.2	27	15	95 (98.5)	—	—
16	5.5	12.1	2	18.5	6	25	3.2	27	15	101 (104.5)	127 (130.5)	153 (156.5)
20	6.6	16.1	4	24.1	8	32	4	30	20	120	145	170
25	6.6	16.1	4	24.1	8	32	4	30	20	127.5	152.5	177.5

( ): For built-in magnet

Refer to page 12 of Standard Type Single Rod for details of accessories (rod end, double knuckle joint, floating joint).

Air Cylinder: Direct Mount
Double Acting, Single Rod

RoHS

C85R Series

Ø 8, Ø 10, Ø 12, Ø 16, Ø 20, Ø 25

How to Order

Double acting, Single rod C D 85R A F 20 – 40 V – B – M9BW S – ☐

Built-in magnet

—	None
D	Built-in magnet

Type

A	Bottom side mounting
B∗1	Front side mounting

∗1 Ø 20, Ø 25 only.

Head cover type

F	Boss-cut/Basic
Y	Head cover axial port

Bore size

8	8 mm
10	10 mm
12	12 mm
16	16 mm
20	20 mm
25	25 mm

Cylinder stroke [mm]
Refer to the next page for standard strokes.

Accessory∗1

—	None
V	Rod end
W	Double knuckle joint

∗1 Refer to Mounting Brackets/Accessories on page 54 for details of accessories.
∗ Accessory is shipped together with the product.

Auto switch mounting type∗1

B	Band mounting

∗1 The symbol is "—" for no magnet.

Auto switch

—	Without auto switch

∗ For applicable auto switches, refer to the table below.
∗ Auto switches are shipped together with the product.

Number of auto switches

—	2
S	1
n	n

Made to order
For details, refer to page 53.

Applicable Auto Switches/Refer to the **Auto Switch** Guide for further information.

Type	Special function	Electrical entry	Indicator light	Wiring (Output)	Load voltage DC	Load voltage AC	Auto switch model: Band mounting Perpendicular	Auto switch model: Band mounting In-line	Lead wire length [m] 0.5 (—)	1 (M)	3 (L)	5 (Z)	None (N)	Pre-wired connector	Applicable load	
Solid state auto switch	—	Grommet	Yes	3-wire (NPN)	24 V	5 V, 12 V	—	M9NV	M9N	●	●	●	○	—	○	IC circuit	Relay, PLC
				3-wire (PNP)				M9PV	M9P	●	●	●	○	—	○		
				2-wire		12 V		M9BV	M9B	●	●	●	○	—	○	—	
		Connector						—	H7C	●	—	●	●	●	—		
	Diagnostic indication (2-colour indicator)	Grommet		3-wire (NPN)		5 V, 12 V		M9NWV	M9NW	●	●	●	○	—	○	IC circuit	
				3-wire (PNP)				M9PWV	M9PW	●	●	●	○	—	○		
				2-wire		12 V		M9BWV	M9BW	●	●	●	○	—	○	—	
	Water resistant (2-colour indicator)			3-wire (NPN)		5 V, 12 V		M9NAV∗1	M9NA∗1	○	○	●	○	—	○	IC circuit	
				3-wire (PNP)				M9PAV∗1	M9PA∗1	○	○	●	○	—	○		
				2-wire		12 V		M9BAV∗1	M9BA∗1	○	○	●	○	—	○	—	
	With diagnostic output (2-colour indicator)			4-wire (NPN)		5 V, 12 V		—	H7NF	●	—	●	○	—	○	IC circuit	
Reed auto switch	—	Grommet	Yes	3-wire (NPN equivalent)	—	5 V	—	A96V	A96	●	—	●	—	—	—	IC circuit	—
				2-wire	24 V	12 V	100 V	A93V∗2	A93	●	●	●	●	—	—	—	Relay, PLC
			No				100 V or less	A90V	A90	●	—	●	—	—	—	IC circuit	
			Yes				—	—	C73C	●	—	●	●	●	—	—	
		Connector	No				24 V or less	—	C80C	●	—	●	●	●	—	IC circuit	
	Diagnostic indication (2-colour indicator)	Grommet	Yes			—	—	—	—	●	—	●	—	—	—	—	

∗1 Water resistant type auto switches can be mounted on the above models, but SMC cannot guarantee water resistance. Please contact SMC regarding water resistant types with the above model numbers.
∗2 1 m lead wire is only applicable to the D-A93.
∗ Lead wire length symbols: 0.5 m····· — (Example) M9NW
1 m····· M (Example) M9NWM
3 m····· L (Example) M9NWL
5 m····· Z (Example) M9NWZ
None····· N (Example) H7CN

∗ Since there are other applicable auto switches than listed above, refer to page 111 for details.
∗ Solid state auto switches marked with "○" are produced upon receipt of order.
∗ D-A9□/M9□ auto switches are shipped together, but not assembled. (Only the auto switch mounting brackets are assembled before shipment.)
∗ D-A9□(V) cannot be mounted on Ø 8, Ø 10, and Ø 12.

Square rod cover makes direct mounting possible

Space saving

Because it is a directly mounted type without using brackets, its overall length is shorter, and its installation pitch can be made smaller. Thus, the space that is required for installation has been dramatically reduced.

2 mounting types

Front side mounting and bottom side mounting available to suit your applications.

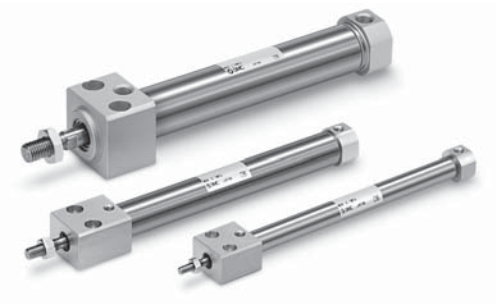

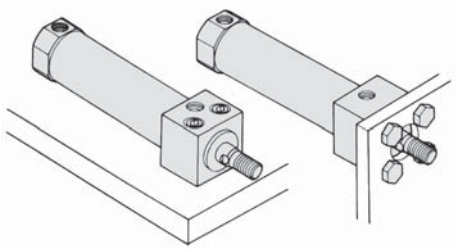

Bottom side mounting **Front side mounting**

Symbol

Double acting, Single rod

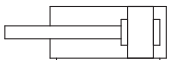

Refer to pages 101 to 111 for cylinders with auto switches.

- Auto Switch Proper Mounting Position (Detection at stroke end) and Mounting Height
- Minimum Stroke for Auto Switch Mounting
- Operating Range
- Auto Switch Mounting Brackets/Part No.

Made to Order

Made to Order

(For details, refer to pages 115 to 120.)

Symbol	Specifications
-XA	Change of rod end shape
-XB6	Heat resistant cylinder (-10 to 150 °C)*1
-XB7	Cold resistant cylinder (-40 to 70 °C)*1
-XB9	Low speed cylinder (10 to 50 mm/s)*1
-XC6A	Made of stainless steel*1

*1 Ø 20, Ø 25 only

Specifications

Bore size [mm]	8	10	12	16	20	25
Type	Pneumatic					
Action	Double acting, Single rod					
Fluid	Air					
Proof pressure	1.5 MPa					
Max. operating pressure	1.0 MPa					
Min. operating pressure	0.1 MPa	0.08 MPa		0.05 MPa		
Ambient and fluid temperature	Without auto switch: -20 °C to 80 °C (No freezing)					
	With auto switch: -10 °C to 60 °C (No freezing)					
Lubricant	Not required (Non-lube)					
Stroke length tolerance	$^{+1.0}_{0}$ mm				$^{+1.4}_{0}$ mm	
Piston speed	50 to 1500 mm/s					
Cushion	Rubber bumper					
Allowable kinetic energy	0.02 J	0.03 J	0.04 J	0.09 J	0.27 J	0.4 J

Standard Strokes

Bore size [mm]	Standard stroke [mm]*1	Max. stroke*2 [mm]
8	10, 25, 40, 50, 80, 100	200
10		400
12	10, 25, 40, 50, 80, 100, 125, 160	400
16		
20		1000
25		

*1 Other strokes are available on request.
*2 For exceeding the standard stroke range, it will be available as a special order (-X2018).

Option: Ordering Example of Cylinder Assembly

Cylinder model: CD85RAF20-50W-B-M9BW

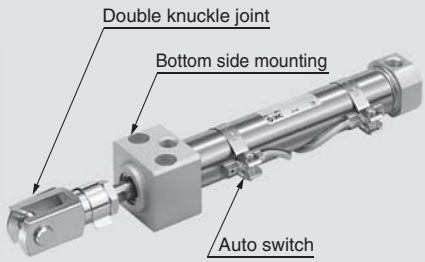

Mounting A: Bottom side mounting
Rod end bracket W: Double knuckle joint
Auto switch D-M9BW: Band mounting, 2 pcs.

* Double knuckle joint and auto switch are shipped together with the product.

⚠ Precautions

Be sure to read this before handling the products. Refer to the back cover for safety instructions. For actuator and auto switch precautions, refer to the "Handling Precautions for SMC Products" and the "Operation Manual" on the SMC website: http://www.smc.eu

Mounting Brackets/Accessories

Mounting bracket/Accessory			Standard (mounted to the body)	Accessory (shipped together)	
			Rod end nut	Rod end	Double knuckle joint
Accessory symbol	V	Rod end	● (1 pc.)	● (1 pc.)	—
	W	Double knuckle joint	● (1 pc.)	—	● (1 pc.)

Mounting Bracket/Accessory Part Nos.

Description		Bore size [mm]						Contents
		8	10	12	16	20	25	
Accessory	Rod end	KJ4D		KJ6D		KJ8D	KJ10D	1 rod end
	Double knuckle joint	GKM4-8		GKM6-12		GKM8-16	GKM10-20	1 double knuckle joint
	Floating joint	JA10-4-070		JA15-6-100		JA20-8-125	JA30-10-125	1 floating joint

∗ Refer to page 12 for dimensions of accessories.

Replacement Parts

Bore size [mm]	Part no.	Note
20	C85A-20PS	Every set includes: 1 rod seal 1 flat washer 1 retaining ring
25	C85A-25PS	

∗ When replacing the seals, use **grease (GR-S-010: ordered separately)** on the sliding parts.

Weights

[g]

Bore size [mm]			8	10	12	16	20	25
Basic weight	Without magnet	C85RAF	38	39	72	78	151	231
		C85RAY	38	39	72	79	152	232
		C85RBF	—	—	—	—	148	230
		C85RBY	—	—	—	—	148	231
	With magnet	CD85RAF	38	40	72	79	154	235
		CD85RAY	38	40	73	79	155	236
		CD85RBF	—	—	—	—	151	234
		CD85RBY	—	—	—	—	152	235
Additional weight per 10 mm of stroke			2.1	2.3	4.1	5.1	8.1	11.3
Accessory	Rod end	KJ□D	17		25		45	70
	Double knuckle joint	GKM□-□	10		20		50	100
	Floating joint	JA□-□-□	10		20		50	70

Calculation example: **C85RAF20-50V**
- Basic weight ····· 151 g (Ø 20)
- Additional weight ··· 8.1 g (at 10 mm stroke)
- Cylinder stroke ····· 50 mm
- Accessory: Rod end ····· 45 g

151 + 8.1 x 50/10 + 45 ≈ **237 g**

Dimensions

Bottom side mounting: C□85RAF/Y 8 to 16 – Stroke – B

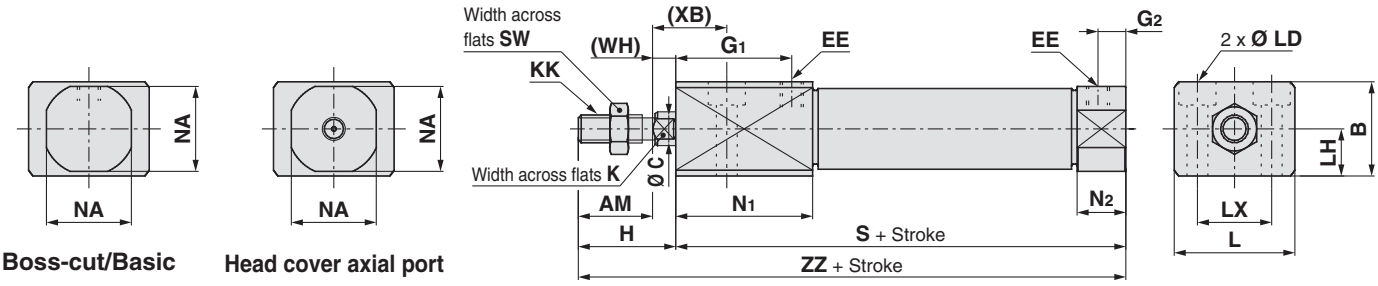

Boss-cut/Basic

Head cover axial port

Dimensions [mm]

Bore size	AM	B	C	EE	G_1	G_2	H	K	KK	L	LD	LH	LX	N_1	N_2	NA	S	SW	(WH)	(XB)	ZZ
8	12	16	4	M5 x 0.8	19	5	16	—	M4 x 0.7	23	Ø 3.5, Ø 6.5 counterbore depth 4	8	14	23.5	9.5	15	58	7	4	12	74
10	12	16	4	M5 x 0.8	19	5	16	—	M4 x 0.7	23	Ø 3.5, Ø 6.5 counterbore depth 4	8	14	23.5	9.5	15	58	7	4	12	74
12	16	20	6	M5 x 0.8	25	6	21	5	M6 x 1	26	Ø 4.5, Ø 8 counterbore depth 5	10	16	29.5	10.5	18.3	67	10	5	16	88
16	16	20	6	M5 x 0.8	25	6	21	5	M6 x 1	26	Ø 4.5, Ø 8 counterbore depth 5	10	16	29.5	10.5	18.3	67	10	5	16	88

Bottom side mounting: C□85RAF/Y 20/25 – Stroke – B

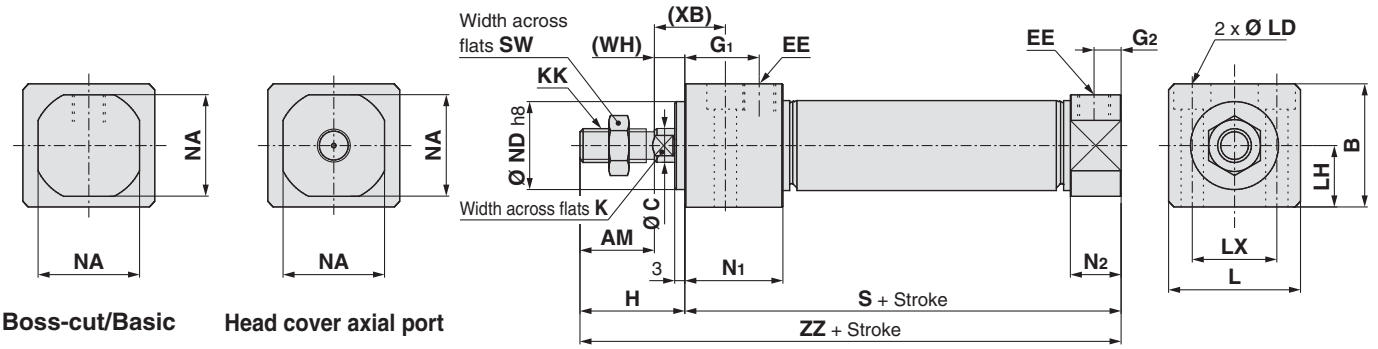

Boss-cut/Basic

Head cover axial port

Dimensions [mm]

Bore size	AM	B	C	EE	G_1	G_2	H	K	KK	L	LD	LH	LX	N_1	N_2	NA	ND	S	SW	(WH)	(XB)	ZZ
20	20	30.3	8	G 1/8	22	8	30	6	M8 x 1.25	33.5	Ø 5.5, Ø 9.5 counterbore depth 6.5	15	21	29	15	24	$20^{0}_{-0.033}$	76	13	10	22	106
25	22	36.6	10	G 1/8	22	8	36	8	M10 x 1.25	39	Ø 6.6, Ø 11 counterbore depth 7.5	18	25	29	15	30	$26^{0}_{-0.033}$	79	17	14	26	115

Front side mounting: C□85RBF/Y 20/25 – Stroke – B

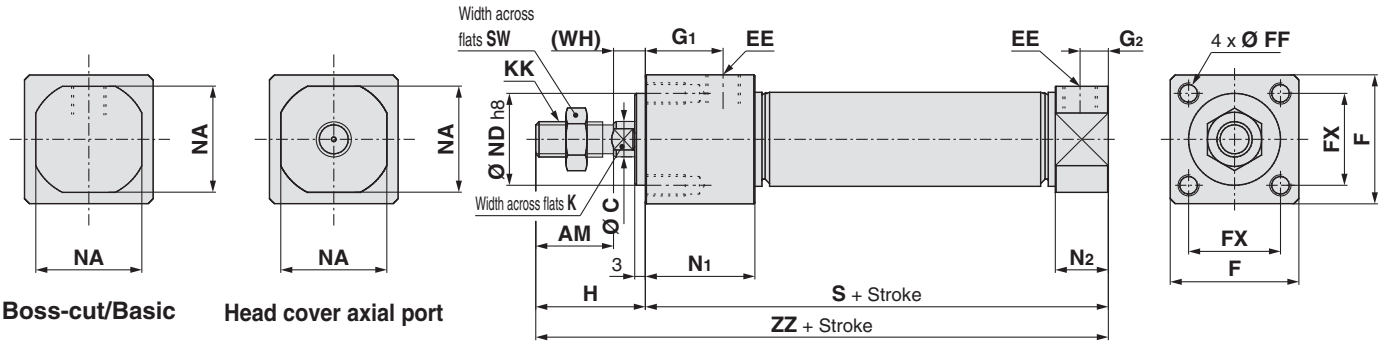

Boss-cut/Basic

Head cover axial port

Dimensions [mm]

Bore size	AM	C	EE	F	FF	FX	G_1	G_2	H	K	KK	N_1	N_2	NA	ND	S	SW	(WH)	ZZ
20	20	8	G 1/8	30.4	M5 x 0.8 depth 9	22	22	8	30	6	M8 x 1.25	29	15	24	$20^{0}_{-0.033}$	76	13	10	106
25	22	10	G 1/8	36.4	M6 x 1 depth 11	26	22	8	36	8	M10 x 1.25	29	15	30	$26^{0}_{-0.033}$	79	17	14	115

Refer to page 12 of Standard Type Single Rod for details of accessories (rod end, double knuckle joint, floating joint).

Air Cylinder: Standard Double Acting, Single Rod

C75 Series

Ø 32, Ø 40

RoHS

How to Order

Double acting, Single rod C D 75 E 32 – 100 C J L V – B – M9BW □ – □

Built-in magnet

—	None
D	Built-in magnet

Head cover type

E	Double end boss-cut
F	Boss-cut/Basic
Y	Head cover axial port

Applicable head cover

Action	Head cover type		
	E	F	Y
Rubber bumper	●	●	●
Air cushion	●	—	—

Bore size

32	32 mm
40	40 mm

Cylinder stroke [mm]
Refer to the next page for standard strokes.

Cushion

—	Rubber bumper (Standard)
C	Air cushion

Rod boot

—	Without rod boot
J	Nylon tarpaulin (One end)
K	Heat resistant tarpaulin (One end)

Mounting bracket∗1

—	None
L	Single foot
M	Double foot
G	Flange
U	Trunnion
N	Clevis

∗1 Refer to Mounting Brackets/ Accessories on page 58 for details of mounting brackets.
∗ Mounting bracket is shipped together with the product.

Applicable mounting bracket

Action	Head cover type	Mounting bracket				
		L	M	G	U	N
Rubber bumper	E	●	●	●	●	●
	F	●	—	●	●	●
	Y	●	—	●	●	●
Air cushion	E	●	●	●	●	●

Accessory∗1

—	None
V	Rod end

∗1 Refer to Mounting Brackets/ Accessories on page 58 for details of accessories.
∗ Accessory is shipped together with the product.

Auto switch mounting type∗1

A	Rail mounting
B	Band mounting

∗1 The symbol is "—" for no magnet.

Auto switch

—	Without auto switch

∗ For applicable auto switches, refer to the table below.
∗ Auto switches are shipped together with the product.

Number of auto switches

—	2
S	1
n	n

Made to order
For details, refer to page 57.

Applicable Auto Switches/Refer to the **Auto Switch** Guide for further information.

Type	Special function	Electrical entry	Indicator light	Wiring (Output)	Load voltage DC	Load voltage AC	Auto switch model: Band mounting Perpendicular	Band mounting In-line	Rail mounting Perpendicular	Rail mounting In-line	Lead wire length [m] 0.5 (—)	1 (M)	3 (L)	5 (Z)	None (N)	Pre-wired connector	Applicable load	
Solid state auto switch	—	Grommet	Yes	3-wire (NPN)	5 V, 12 V	—	M9NV	M9N	F7NV	F79	●	●	●	○	—	○	IC circuit	Relay, PLC
				3-wire (PNP)			M9PV	M9P	F7PV	F7P	●	●	●	○	—	○		
				2-wire	12 V		M9BV	M9B	F7BV	J79	●	●	●	○	—	○	—	
		Connector					—	H7C	J79C	—	●	—	●	●	●	—		
	Diagnostic indication (2-colour indicator)	Grommet		3-wire (NPN)	5 V, 12 V		M9NWV	M9NW	F7NWV	F79W	●	●	●	○	—	○	IC circuit	
				3-wire (PNP)			M9PWV	M9PW	—	F7PW	●	●	●	○	—	○		
				2-wire	12 V		M9BWV	M9BW	F7BWV	J79W	●	●	●	○	—	○	—	
	Water resistant (2-colour indicator)			3-wire (NPN)	5 V, 12 V		M9NAV∗1	M9NA∗1	—	—	○	○	●	○	—	○	IC circuit	
				3-wire (PNP)			M9PAV∗1	M9PA∗1	—	—	○	○	●	○	—	○		
				2-wire	12 V		M9BAV∗1	M9BA∗1	F7BAV∗1	F7BA∗1	○	○	●	○	—	○	—	
	With diagnostic output (2-colour indicator)			4-wire (NPN)	5 V, 12 V		—	H7NF	—	F79F	●	—	●	○	—	○	IC circuit	
Reed auto switch	—	Grommet	Yes	3-wire (NPN equivalent)	5 V	—	A96V	A96	—	A76H	●	—	●	—	—	—	IC circuit	—
				2-wire	—	200 V	—	—	A72	A72H	●	—	●	—	—	—	—	Relay, PLC
					12 V	100 V	A93V∗2	A93	A73∗2	A73H∗2	●	●	●	●	—	—		
			No			100 V or less	A90V	A90	A80	A80H	●	—	●	—	—	—	IC circuit	
			Yes			—	—	C73C	A73C	—	●	—	●	●	●	—	—	
		Connector	No			24 V or less	—	C80C	A80C	—	●	—	●	●	●	—	IC circuit	
	Diagnostic indication (2-colour indicator)	Grommet	Yes		—	—	—	—	A79W	—	●	—	●	—	—	—	—	

∗1 Water resistant type auto switches can be mounted on the above models, but SMC cannot guarantee water resistance. Please contact SMC regarding water resistant types with the above model numbers.
∗2 1 m lead wire is only applicable to the D-A93.
∗ Lead wire length symbols: 0.5 m····· — (Example) M9NW; 1 m····· M (Example) M9NWM; 3 m····· L (Example) M9NWL; 5 m····· Z (Example) M9NWZ; None····· N (Example) H7CN
∗ Since there are other applicable auto switches than listed above, refer to page 111 for details.
∗ Solid state auto switches marked with "○" are produced upon receipt of order.
∗ D-A9□/M9□/A7□/A80□/F7□/J7□ auto switches are shipped together, but not assembled. (For band mounting, only the auto switch mounting brackets are assembled before shipment.)

Specifications

Bore size [mm]		32	40
Type		Pneumatic	
Action		Double acting, Single rod	
Fluid		Air	
Proof pressure		1.5 MPa	
Max. operating pressure		1.0 MPa	
Min. operating pressure	**Rubber bumper**	0.05 MPa	
	Air cushion	0.05 MPa	
Ambient and fluid temperature		Without auto switch: -20 °C to 80 °C (No freezing)	
		With auto switch: -10 °C to 60 °C (No freezing)	
Lubricant		Not required (Non-lube)	
Stroke length tolerance		$^{+1.4}_{0}$ mm	
Piston speed		50 to 1500 mm/s	
Cushion		Rubber bumper Air cushion	
Allowable kinetic energy	**Rubber bumper**	0.65 J	1.2 J
	Air cushion	1.07 J	2.35 J

Symbol

Double acting, Single rod

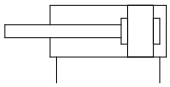

Air cushion

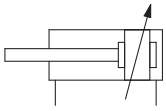

Standard Strokes

Bore size [mm]	Standard stroke [mm]*1*3	Max. stroke*2 [mm]
32	10, 25, 40, 50, 80, 100, 125, 160, 200, 250, 300	1000
40		

*1 Other strokes are available on request.
*2 For exceeding the standard stroke range, it will be available as a special order (-X2018).
*3 The minimum stroke with air cushion is 25 mm.

Refer to pages 101 to 111 for cylinders with auto switches.

- Auto Switch Proper Mounting Position (Detection at stroke end) and Mounting Height
- Minimum Stroke for Auto Switch Mounting
- Operating Range
- Auto Switch Mounting Brackets/Part No.

Made to Order

(For details, refer to pages 115 to 120.)

Symbol	Specifications
-XA	Change of rod end shape
-XB6	Heat resistant cylinder (-10 to 150 °C)*1
-XB7	Cold resistant cylinder (-40 to 70 °C)*1
-XB9	Low speed cylinder (10 to 50 mm/s)*1
-XC4	With heavy duty scraper*1
-XC6□	Made of stainless steel

*1 Rubber bumper only

Option: Ordering Example of Cylinder Assembly

Cylinder model: CD75E40-50NV-B-M9BW

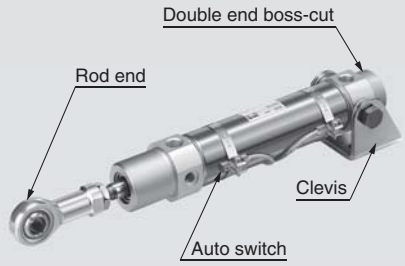

Head cover E: Double end boss-cut
Mounting bracket N: Clevis
Rod end bracket V: Rod end
Auto switch D-M9BW: Band mounting, 2 pcs.

* Mounting bracket, rod end, and auto switch are shipped together with the product.

⚠ Precautions

Be sure to read this before handling the products. Refer to the back cover for safety instructions. For actuator and auto switch precautions, refer to the "Handling Precautions for SMC Products" and the "Operation Manual" on the SMC website: http://www.smc.eu

Mounting Brackets/Accessories

Mounting bracket/Accessory			Standard (mounted to the body)		Mounting bracket (shipped together)						Accessory (shipped together)
			Mounting nut	Rod end nut	Mounting nut	Foot/ Flange	Trunnion pin	Trunnion washer	Clevis pivot bracket	Clevis bolt	Rod end
Mounting bracket symbol	L	Single foot	● (1 pc.)	● (1 pc.)	—	● (1 pc.)	—	—	—	—	—
	M	Double foot	● (1 pc.)	● (1 pc.)	● (1 pc.)	● (2 pcs.)	—	—	—	—	—
	G	Flange	● (1 pc.)	● (1 pc.)	—	● (1 pc.)	—	—	—	—	—
	U	Trunnion	● (1 pc.)	● (1 pc.)	—	—	● (2 pcs.)	● (2 pcs.)	—	—	—
	N	Clevis	● (1 pc.)	● (1 pc.)	—	—	—	● (2 pcs.)	● (1 pc.)	● (2 pcs.)	—
Accessory symbol	V	Rod end	● (1 pc.)	● (1 pc.)	—	—	—	—	—	—	● (1 pc.)

Mounting Bracket/Accessory Part Nos.

Mounting bracket/Accessory		Bore size [mm]		Contents
		32	40	
Mounting bracket	Rod end nut	C75NT32Z	C75NT40Z	1 rod end nut
	Mounting nut	C75SN32Z	C75SN40Z	1 mounting nut
	Flange, Foot (1 pc.)	C75F32AZ	C75F40AZ	1 flange/foot
	Flange, Foot (2 pcs. with 1 mounting nut)	C75F32BZ	C75F40BZ	2 flanges/foots, 1 mounting nut
	Flange, Foot (1 pc. with 1 mounting nut)	C75F32CZ	C75F40CZ	1 flange/foot, 1 mounting nut
	Trunnion	C75T32Z	C75T40Z	2 trunnion pins, 2 trunnion washers
	Clevis	C75C32Z	C75C40Z	1 clevis pivot bracket, 2 clevis bolts, 2 trunnion washers
Accessory	Rod end	KJ10DA	KJ12DA	1 rod end
	Floating joint	JA25-10-150	JA40-12-175	

∗ Refer to page 63 for dimensions of accessories.

Replacement Parts: For Standard Type

Bore size [mm]	Part no.	Note
32	C75A-32PS	Every set includes: 1 rod seal 1 flat washer 1 retaining ring
40	C75A-40PS	

∗ When replacing the seals, use **grease (GR-S-010: ordered separately)** on the sliding parts.

Weights

[kg]

Bore size [mm]			32	40
Basic weight	Without magnet	C75E	0.34 (0.37)	0.65 (0.64)
		C75F	0.31	0.61
		C75Y	0.31	0.61
	With magnet	CD75E	0.34 (0.37)	0.66 (0.65)
		CD75F	0.32	0.61
		CD75Y	0.32	0.61
Additional weight per 10 mm of stroke			0.02	0.03
Mounting bracket	Flange, Foot (1 pc.)	C75F□AZ	0.11	0.2
	Flange, Foot (2 pcs. with 1 mounting nut)	C75F□BZ	0.25	0.46
	Trunnion	C75T□Z	0.02	0.03
	Clevis	C75C□Z	0.17	0.31
Accessory	Rod end	KJ□DA	0.07	0.11
	Floating joint	JA□-□-□	0.07	0.16

( ): For air cushion

Calculation example: **C75E32-50NV**
- Basic weight ····· 0.34 kg (Ø 32)
- Additional weight ··· 0.02 kg (at 10 mm stroke)
- Cylinder stroke ····· 50 mm
- Mounting bracket: Clevis ··· 0.17 kg
- Accessory: Rod end ····· 0.07 kg

0.34 + 0.02 x 50/10 + 0.17 + 0.07 = **0.68 kg**

Dimensions

Double end boss-cut

Rubber bumper: C□75E Bore size – Stroke – □

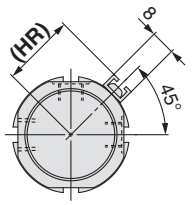

Rail mounting (A)

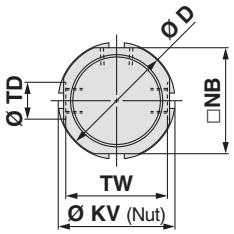

Band mounting (B)
Without magnet

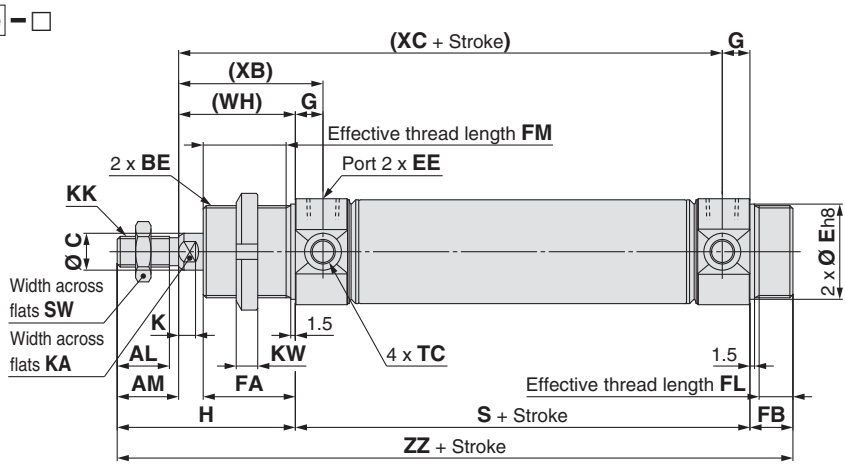

Air cushion: C□75E Bore size – Stroke C – □

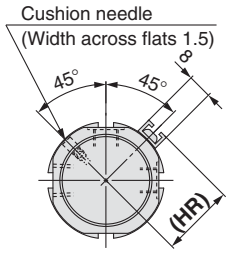

Rail mounting (A)

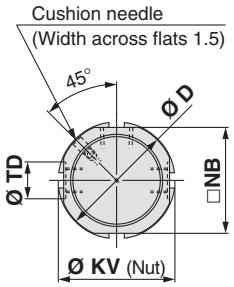

Band mounting (B)
Without magnet

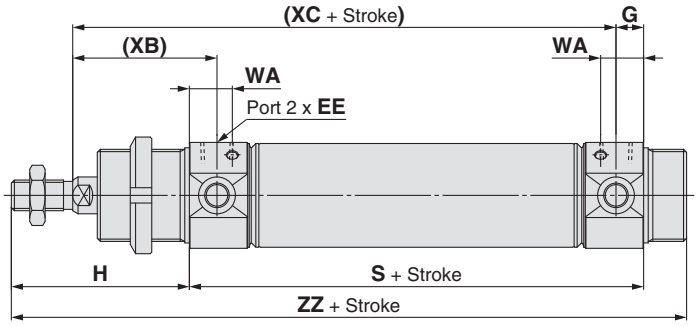

With rod boot

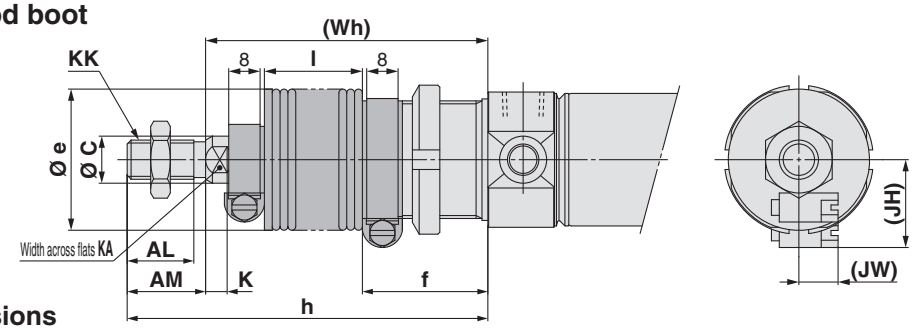

Dimensions

[mm]

Bore size	AL	AM	BE	C	D	E	EE	FA	FB	FM	FL	G	H	(HR)	K	KA	KK	KV
32	17	20	M30 x 1.5	12	37.5	30	G1/8	30	14	27	11	9	58	23.8	5.5	10	M10 x 1.5	38
40	21	24	M38 x 1.5	14	46.5	38	G1/4	35	16	32	13	12	69	28.3	7	12	M12 x 1.75	50

Bore size	KW	NB	S	SW	TC	TD	TW	WA	(WH)	(XB)	(XC)	ZZ
32	7	34.5	68	17	M8 x 1	$12^{+0.08}_{0}$	33.1	14	38	47	97	140
40	8	42.5	89	19	M10 x 1	$14^{+0.08}_{0}$	39.5	20	45	57	122	174

With Rod Boot

[mm]

Bore size \ Stroke \ Item	AL	AM	C	e	f	K	KA	KK	h						
									1 to 50	51 to 100	101 to 150	151 to 200	201 to 300	301 to 400	401 to 500
32	17	20	12	36	32	5.5	10	M10 x 1.5	77	90	102	115	140	165	190
40	21	24	14	46	37	7	12	M12 x 1.75	88	101	113	126	151	176	201

Bore size \ Stroke \ Item	l							(JH)	(JW)	(Wh)						
	1 to 50	51 to 100	101 to 150	151 to 200	201 to 300	301 to 400	401 to 500	Reference	Reference	1 to 50	51 to 100	101 to 150	151 to 200	201 to 300	301 to 400	401 to 500
32	12.5	25	37.5	50	75	100	125	23.5	10.5	57	70	82	95	120	145	170
40	12.5	25	37.5	50	75	100	125	27	10.5	64	77	89	102	127	152	177

Refer to page 63 of Standard Type Single Rod for details of accessories (rod end, floating joint).

Dimensions

Boss-cut/Basic

Rubber bumper: C□75F Bore size – Stroke – □

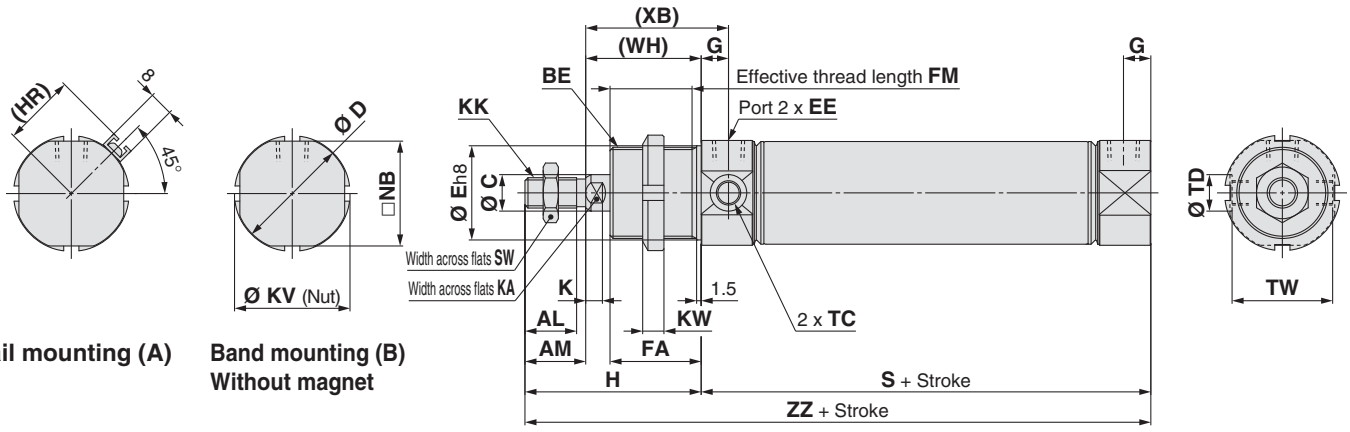

Rail mounting (A)

Band mounting (B)
Without magnet

Head cover axial port

Rubber bumper: C□75Y Bore size – Stroke – □

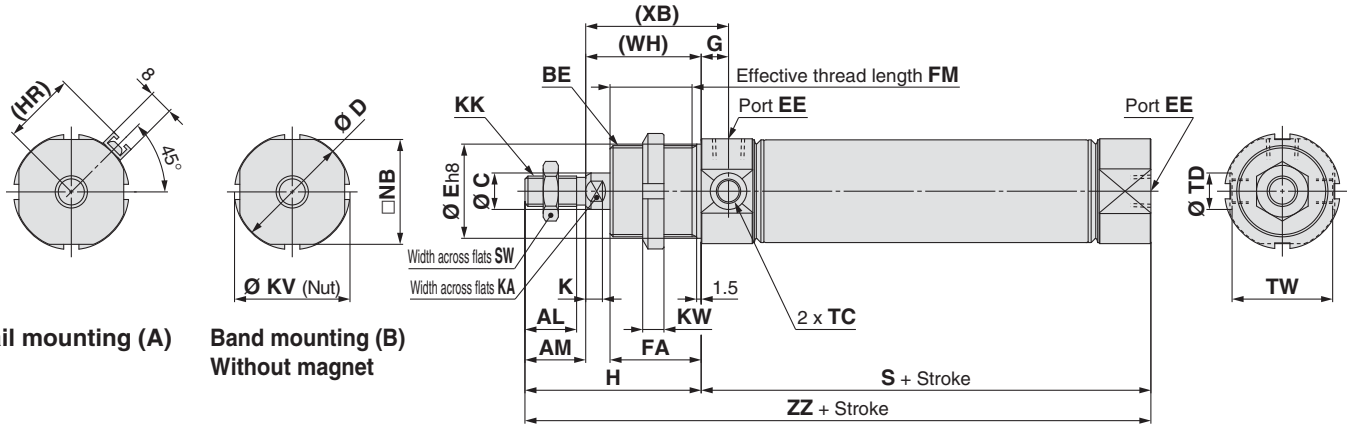

Rail mounting (A)

Band mounting (B)
Without magnet

Dimensions

[mm]

Bore size	AL	AM	BE	C	D	E	EE	FA	FM	G	H	(HR)	K	KA	KK	KV	KW
32	17	20	M30 x 1.5	12	37.5	30	G1/8	30	27	9	58	23.8	5.5	10	M10 x 1.5	38	7
40	21	24	M38 x 1.5	14	46.5	38	G1/4	35	32	12	69	28.3	7	12	M12 x 1.75	50	8

Bore size	NB	S	SW	TC	TD	TW	(WH)	(XB)	ZZ
32	34.5	68	17	M8 x 1	$12^{+0.08}_{0}$	33.1	38	47	126
40	42.5	89	19	M10 x 1	$14^{+0.08}_{0}$	39.5	45	57	158

Refer to page 63 of Standard Type Single Rod for details of accessories (rod end, floating joint).

Dimensions

Bracket is shipped together with the product.

Single foot: C□75E□−□L/Flange: C□75E□−□G (With mounting bracket)

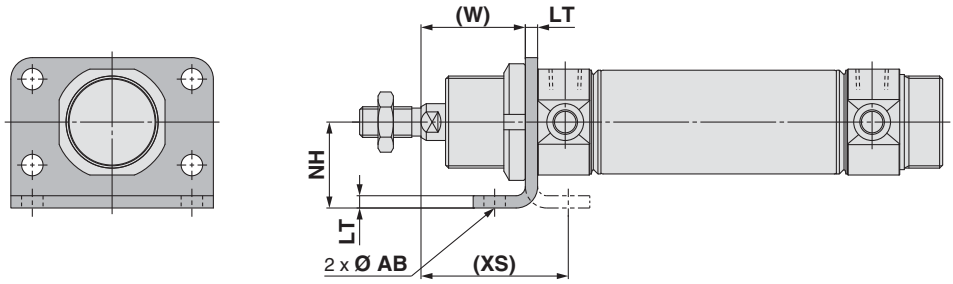

Double foot: C□75E□−□M (With mounting bracket)

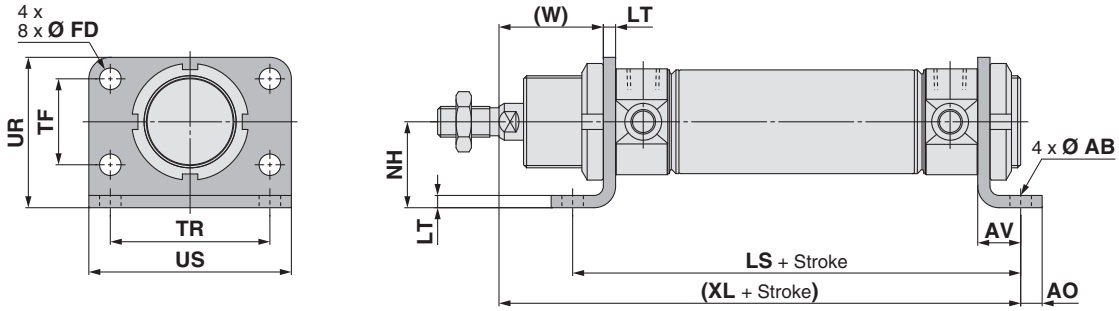

[mm]

Bore size	AB	AO	AV	FD	LS	LT	NH	TF	TR	UR	US	(W)	(XL)	(XS)
32	7	7	14	7	96	4	28	28	52	49	66	34	120	48
40	9	10	20	9	129	5	33	30	60	58	80	40	154	60

Rod trunnion: C□75E□−□U (With mounting bracket)

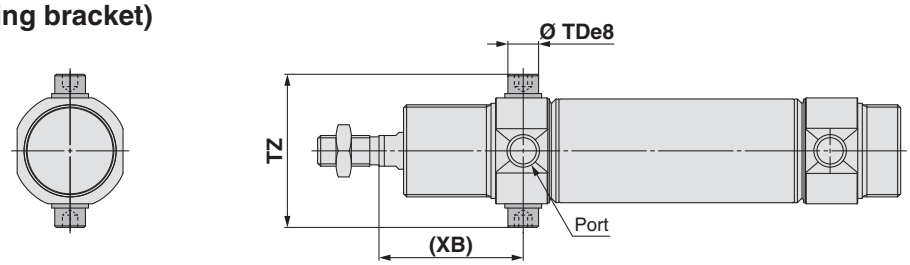

Head trunnion: C□75E□−□U (With mounting bracket)

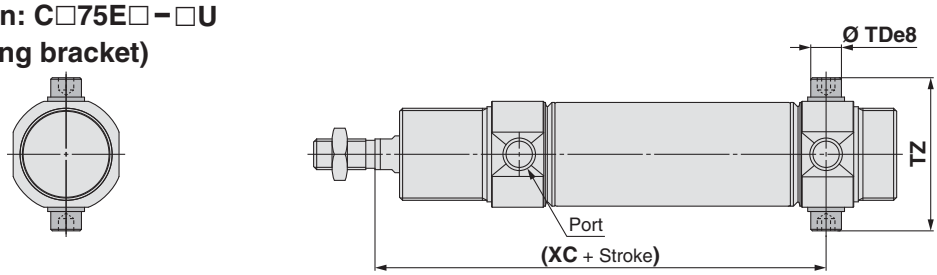

[mm]

Bore size	TDe8	TZ	(XB)	(XC)
32	$10^{-0.025}_{-0.047}$	49.9	47	97
40	$12^{-0.032}_{-0.059}$	62.3	57	122

Refer to page 63 of Standard Type Single Rod for details of accessories (rod end, floating joint).

Dimensions

Bracket is shipped together with the product.

Rod clevis: C□75E□−□N
(With mounting bracket)

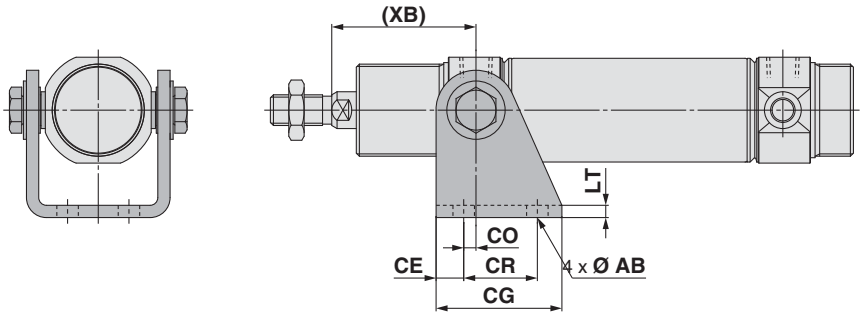

Head clevis: C□75E□−□N
(With mounting bracket)

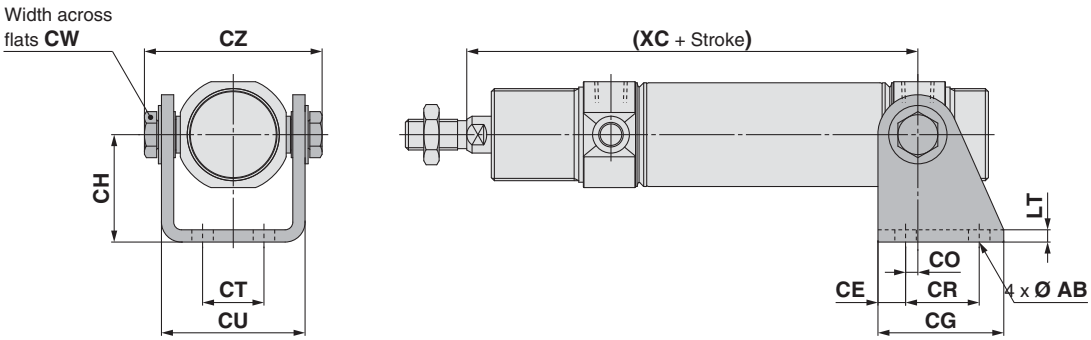

[mm]

Bore size	AB	CE	CG	CH	CO	CR	CT	CU	CW	CZ	LT	(XB)	(XC)
32	7	9	41	35	4	24	20	46.8	13	57.9	4	47	97
40	9	12	52	40	3	30	28	58.2	17	72.3	5	57	122

Refer to page 63 of Standard Type Single Rod for details of accessories (rod end, floating joint).

Dimensions of Accessories

Rod End

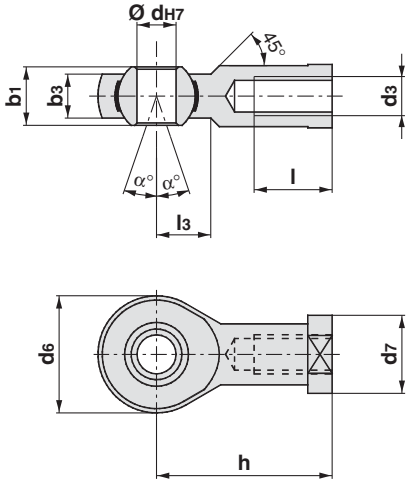

[mm]

Bore size	Part no.	b_1	b_3	d_{H7}	d_6	d_7	h	l	l_3	d_3	α°
32	**KJ10DA**	14	10.5	10	28	19	43	20	15	M10 x 1.5	13
40	**KJ12DA**	16	12	12	32	22	50	22	17	M12 x 1.75	13

Floating Joint: JA

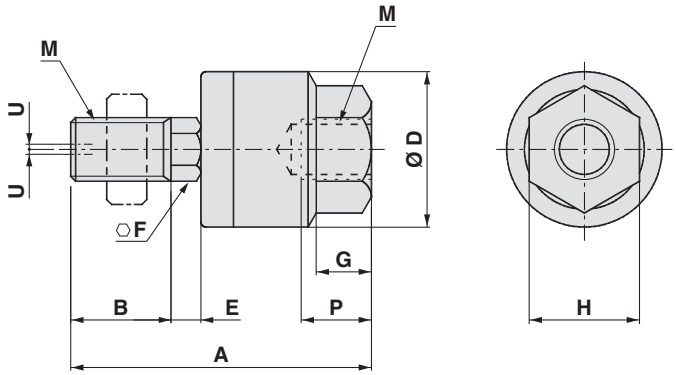

[mm]

Bore size	Part no.	M		A	B	D	E	F	G	H	Max. screw-in depth **P**	Allowable eccentricity **U**	Max. operating tension and compression power [kN]
		Nominal thread dia.	Pitch										
32	**JA25-10-150**	10	1.5	49.5	19.5	24	5	8	8	17	9	0.5	2.5
40	**JA40-12-175**	12	1.75	60	20	31	6	11	11	22	13	0.75	4.4

Air Cylinder: Standard Double Acting, Double Rod

C75W Series

Ø 32, Ø 40

RoHS

How to Order

Double acting, Double rod C D 75WE 32 – 100 C J L V – B – M9BW □ – □

Built-in magnet

—	None
D	Built-in magnet

Bore size

32	32 mm
40	40 mm

Cylinder stroke [mm]
Refer to the next page for standard strokes.

Cushion

—	Rubber bumper (Standard)
C	Air cushion

Rod boot

—	Without rod boot
J	Nylon tarpaulin (One end)
K	Heat resistant tarpaulin (One end)
JJ	Nylon tarpaulin (Both ends)
KK	Heat resistant tarpaulin (Both ends)

Mounting bracket∗1

—	None
L	Single foot
M	Double foot
G	Flange
U	Trunnion
N	Clevis

Applicable mounting bracket

Action	Mounting bracket				
	L	M	G	U	N
Rubber bumper	●	●	●	●	●
Air cushion	●	●	●	●	●

∗1 Refer to Mounting Brackets/Accessories on page 66 for details of mounting brackets.
∗ Mounting bracket is shipped together with the product.

Auto switch

—	Without auto switch

∗ For applicable auto switches, refer to the table below.
∗ Auto switches are shipped together with the product.

Auto switch mounting type∗1

A	Rail mounting
B	Band mounting

∗1 The symbol is "—" for no magnet.

Number of auto switches

—	2
S	1
n	n

Made to order
For details, refer to page 65.

Accessory∗1

—	None
V	Rod end

∗1 Refer to Mounting Brackets/Accessories on page 66 for details of accessories.
∗ Accessory is shipped together with the product.

Applicable Auto Switches/Refer to the **Auto Switch** Guide for further information.

Type	Special function	Electrical entry	Indicator light	Wiring (Output)	Load voltage DC	Load voltage AC	Auto switch model: Band mounting Perpendicular	Band mounting In-line	Rail mounting Perpendicular	Rail mounting In-line	Lead wire length [m] 0.5 (—)	1 (M)	3 (L)	5 (Z)	None (N)	Pre-wired connector	Applicable load	
Solid state auto switch	—	Grommet	Yes	3-wire (NPN)	5 V, 12 V	—	M9NV	M9N	F7NV	F79	●	●	●	○	—	○	IC circuit	Relay, PLC
				3-wire (PNP)			M9PV	M9P	F7PV	F7P	●	●	●	○	—	○		
				2-wire	12 V		M9BV	M9B	F7BV	J79	●	●	●	○	—	○	—	
		Connector					—	H7C	J79C	—	●	—	●	●	●	—		
	Diagnostic indication (2-colour indicator)	Grommet		3-wire (NPN)	5 V, 12 V		M9NWV	M9NW	F7NWV	F79W	●	●	●	○	—	○	IC circuit	
				3-wire (PNP)			M9PWV	M9PW	—	F7PW	●	●	●	○	—	○		
				2-wire	12 V		M9BWV	M9BW	F7BWV	J79W	●	●	●	○	—	○	—	
	Water resistant (2-colour indicator)			3-wire (NPN)	5 V, 12 V		M9NAV∗1	M9NA∗1	—	—	○	○	●	○	—	○	IC circuit	
				3-wire (PNP)			M9PAV∗1	M9PA∗1	—	—	○	○	●	○	—	○		
				2-wire	12 V		M9BAV∗1	M9BA∗1	F7BAV∗1	F7BA∗1	○	○	●	○	—	○	—	
	With diagnostic output (2-colour indicator)			4-wire (NPN)	5 V, 12 V		—	H7NF	—	F79F	●	—	●	○	—	○	IC circuit	
Reed auto switch	—	Grommet	Yes	3-wire (NPN equivalent)	5 V	—	A96V	A96	—	A76H	●	—	●	—	—	—	IC circuit	—
				2-wire	—	200 V	—	—	A72	A72H	●	—	●	—	—	—	—	Relay, PLC
					12 V	100 V	A93V∗2	A93	A73∗2	A73H∗2	●	●	●	●	—	—		
			No			100 V or less	A90V	A90	A80	A80H	●	—	●	—	—	—	IC circuit	
			Yes			—	—	C73C	A73C	—	●	—	●	●	●	—	—	
		Connector	No			24 V or less	—	C80C	A80C	—	●	—	●	●	●	—	IC circuit	
	Diagnostic indication (2-colour indicator)	Grommet	Yes		—	—	—	—	A79W	—	●	—	●	—	—	—	—	

∗1 Water resistant type auto switches can be mounted on the above models, but SMC cannot guarantee water resistance. Please contact SMC regarding water resistant types with the above model numbers.
∗2 1 m lead wire is only applicable to the D-A93.
∗ Lead wire length symbols: 0.5 m····· — (Example) M9NW
1 m····· M (Example) M9NWM
3 m····· L (Example) M9NWL
5 m····· Z (Example) M9NWZ
None····· N (Example) H7CN

∗ Since there are other applicable auto switches than listed above, refer to page 111 for details.
∗ Solid state auto switches marked with "○" are produced upon receipt of order.
∗ D-A9□/M9□/A7□/A80□/F7□/J7□ auto switches are shipped together, but not assembled. (For band mounting, only the auto switch mounting brackets are assembled before shipment.)

Specifications

Bore size [mm]		32	40
Type		Pneumatic	
Action		Double acting, Double rod	
Fluid		Air	
Proof pressure		1.5 MPa	
Max. operating pressure		1.0 MPa	
Min. operating pressure	**Rubber bumper**	0.08 MPa	
	Air cushion	0.08 MPa	
Ambient and fluid temperature		Without auto switch: -20 °C to 80 °C (No freezing)	
		With auto switch: -10 °C to 60 °C (No freezing)	
Lubricant		Not required (Non-lube)	
Stroke length tolerance		$^{+1.4}_{0}$ mm	
Piston speed		50 to 1500 mm/s	
Cushion		Rubber bumper Air cushion	
Allowable kinetic energy	**Rubber bumper**	0.65 J	1.2 J
	Air cushion	1.07 J	2.35 J

Symbol

Rubber bumper

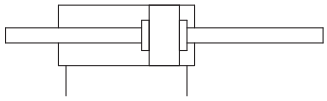

Air cushion

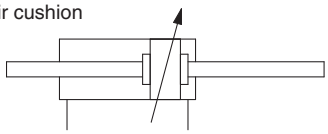

Standard Strokes

Bore size [mm]	Standard stroke [mm]*1*3	Max. stroke*2 [mm]
32	10, 25, 40, 50, 80, 100, 125, 160, 200, 250, 300	500
40		

*1 Other strokes are available on request.
*2 For exceeding the standard stroke range, it will be available as a special order (-X2018).
*3 The minimum stroke with air cushion is 25 mm.

Refer to pages 101 to 111 for cylinders with auto switches.

- Auto Switch Proper Mounting Position (Detection at stroke end) and Mounting Height
- Minimum Stroke for Auto Switch Mounting
- Operating Range
- Auto Switch Mounting Brackets/Part No.

Made to Order

(For details, refer to pages 115 to 120.)

Symbol	Specifications
-XA	Change of rod end shape
-XB6	Heat resistant cylinder (-10 to 150 °C)*1
-XB7	Cold resistant cylinder (-40 to 70 °C)*1
-XC6□	Made of stainless steel

*1 Rubber bumper only

Option: Ordering Example of Cylinder Assembly

Cylinder model: CD75WE40-50MV-B-M9BW

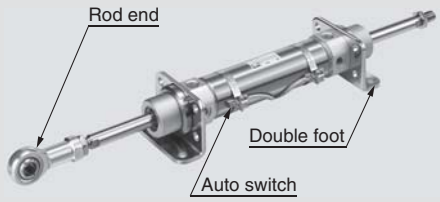

Mounting bracket M: Double foot
Rod end bracket V: Rod end
Auto switch D-M9BW: Band mounting, 2 pcs.

* Mounting bracket, rod end, and auto switch are shipped together with the product.

⚠ Precautions

Be sure to read this before handling the products. Refer to the back cover for safety instructions. For actuator and auto switch precautions, refer to the "Handling Precautions for SMC Products" and the "Operation Manual" on the SMC website: http://www.smc.eu

Mounting Brackets/Accessories

Mounting bracket/Accessory			Standard (mounted to the body)		Mounting bracket (shipped together)						Accessory (shipped together)
			Mounting nut	Rod end nut	Mounting nut	Foot/ Flange	Trunnion pin	Trunnion washer	Clevis pivot bracket	Clevis bolt	Rod end
Mounting bracket symbol	L	Single foot	● (1 pc.)	● (2 pcs.)	—	● (1 pc.)	—	—	—	—	—
	M	Double foot	● (1 pc.)	● (2 pcs.)	● (1 pc.)	● (2 pcs.)	—	—	—	—	—
	G	Flange	● (1 pc.)	● (2 pcs.)	—	● (1 pc.)	—	—	—	—	—
	U	Trunnion	● (1 pc.)	● (2 pcs.)	—	—	● (2 pcs.)	● (2 pcs.)	—	—	—
	N	Clevis	● (1 pc.)	● (2 pcs.)	—	—	—	● (2 pcs.)	● (1 pc.)	● (2 pcs.)	—
Accessory symbol	V	Rod end	● (1 pc.)	● (2 pcs.)	—	—	—	—	—	—	● (1 pc.)

Mounting Bracket/Accessory Part Nos.

Mounting bracket/Accessory		Bore size [mm]		Contents
		32	40	
Mounting bracket	Rod end nut	C75NT32Z	C75NT40Z	1 rod end nut
	Mounting nut	C75SN32Z	C75SN40Z	1 mounting nut
	Flange, Foot (1 pc.)	C75F32AZ	C75F40AZ	1 flange/foot
	Flange, Foot (2 pcs. with 1 mounting nut)	C75F32BZ	C75F40BZ	2 flanges/foots, 1 mounting nut
	Flange, Foot (1 pc. with 1 mounting nut)	C75F32CZ	C75F40CZ	1 flange/foot, 1 mounting nut
	Trunnion	C75T32Z	C75T40Z	2 trunnion pins, 2 trunnion washers
	Clevis	C75C32Z	C75C40Z	1 clevis pivot bracket, 2 clevis bolts, 2 trunnion washers
Accessory	Rod end	KJ10DA	KJ12DA	1 rod end
	Floating joint	JA25-10-150	JA40-12-175	

∗ Refer to page 63 for dimensions of accessories.

Replacement Parts: For Standard Type

Bore size [mm]	Part no.	Note
32	C75A-32PS	Every set includes: 1 rod seal 1 flat washer 1 retaining ring
40	C75A-40PS	

∗ When replacing the seals, use **grease (GR-S-010: ordered separately)** on the sliding parts.
When replacing seals for a double rod actuator, order 2 sets of replacement parts.

Weights

[kg]

Bore size [mm]			32	40
Basic weight	Without magnet	C75WE	0.41 (0.45)	0.77 (0.79)
	With magnet	CD75WE	0.42 (0.46)	0.78 (0.8)
Additional weight per 10 mm of stroke			0.03	0.04
Mounting bracket	Flange, Foot (1 pc.)	C75F□AZ	0.11	0.2
	Flange, Foot (2 pcs. with 1 mounting nut)	C75F□BZ	0.25	0.46
	Trunnion	C75T□Z	0.02	0.03
	Clevis	C75C□Z	0.17	0.31
Accessory	Rod end	KJ□DA	0.07	0.11
	Floating joint	JA□-□-□	0.07	0.16

( ): For air cushion

Calculation example: **C75WE32-50MV**
- Basic weight ····· 0.41 kg (Ø 32)
- Additional weight ··· 0.03 kg (at 10 mm stroke)
- Cylinder stroke ····· 50 mm
- Mounting bracket: Double foot ··· 0.25 kg
- Accessory: Rod end ····· 0.07 kg

0.41 + 0.03 x 50/10 + 0.25 + 0.07 = **0.88 kg**

Dimensions

Double end boss-cut

Rubber bumper: C□75WE Bore size – Stroke – □

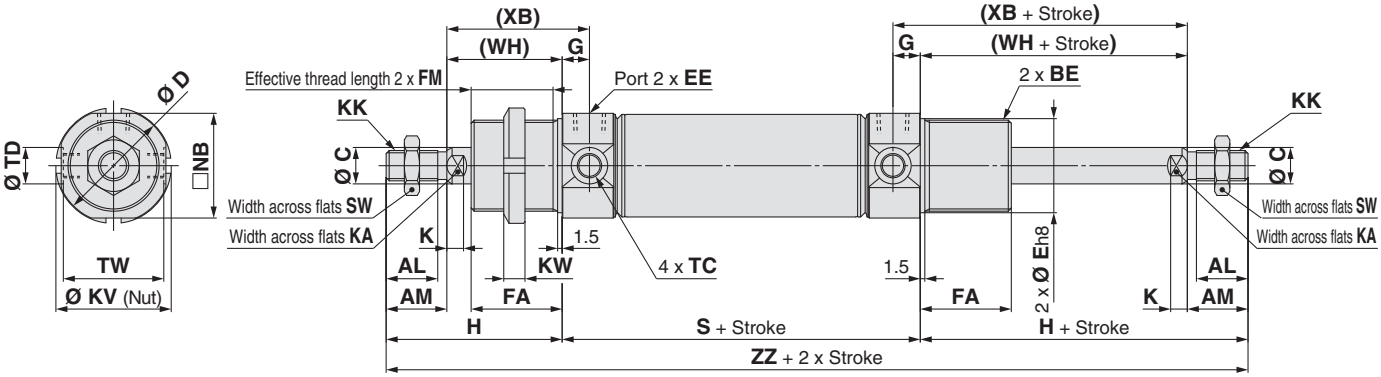

Air cushion: C□75WE Bore size – Stroke C – □

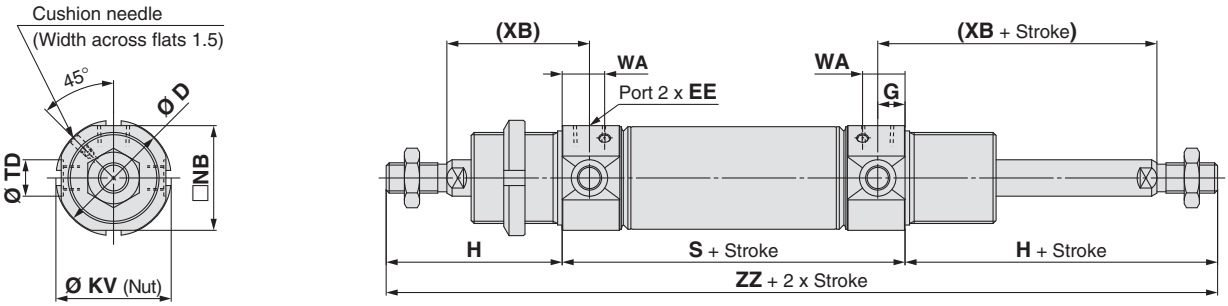

With rod boot

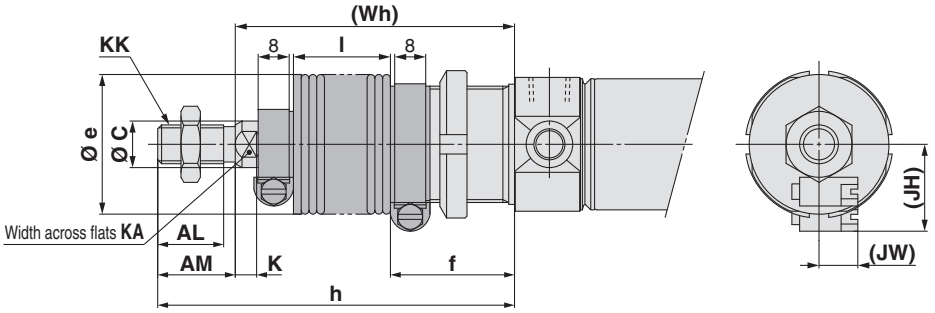

Dimensions

[mm]

Bore size	AL	AM	BE	C	D	E	EE	FA	FM	G	H	K	KA	KK	KV	KW	NB
32	17	20	M30 x 1.5	12	37.5	30	G1/8	30	27	9	58	5.5	10	M10 x 1.5	38	7	34.5
40	21	24	M38 x 1.5	14	46.5	38	G1/4	35	32	12	69	7	12	M12 x 1.75	50	8	42.5

Bore size	S	SW	TC	TD	TW	WA	(WH)	(XB)	ZZ
32	68	17	M8 x 1	$12^{+0.08}_{0}$	33.1	14	38	47	184
40	89	19	M10 x 1	$14^{+0.08}_{0}$	39.5	20	45	57	227

With Rod Boot

[mm]

Bore size \ Stroke \ Item	AL	AM	C	e	f	K	KA	KK	h						
									1 to 50	51 to 100	101 to 150	151 to 200	201 to 300	301 to 400	401 to 500
32	17	20	12	36	32	5.5	10	M10 x 1.5	77	90	102	115	140	165	190
40	21	24	14	46	37	7	12	M12 x 1.75	88	101	113	126	151	176	201

Bore size \ Stroke \ Item	l							(JH)	(JW)	(Wh)						
	1 to 50	51 to 100	101 to 150	151 to 200	201 to 300	301 to 400	401 to 500	Reference	Reference	1 to 50	51 to 100	101 to 150	151 to 200	201 to 300	301 to 400	401 to 500
32	12.5	25	37.5	50	75	100	125	23.5	10.5	57	70	82	95	120	145	170
40	12.5	25	37.5	50	75	100	125	27	10.5	64	77	89	102	127	152	177

Refer to page 63 of Standard Type Single Rod for details of accessories (rod end, floating joint).

Dimensions

Bracket is shipped together with the product.

Single foot: C□75WE□−□L/Flange: C□75WE□−□G
(With mounting bracket)

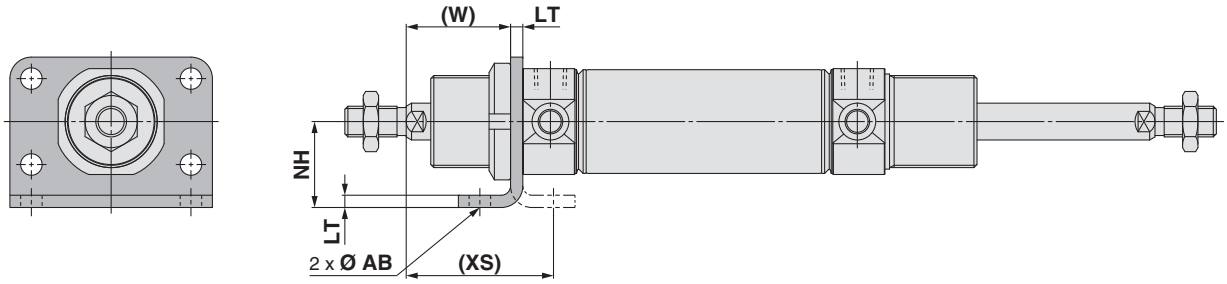

Double foot: C□75WE□−□M
(With mounting bracket)

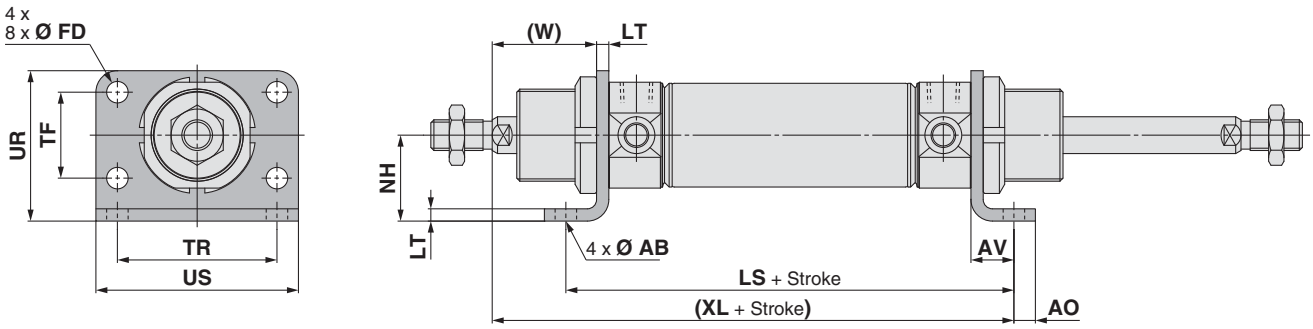

[mm]

Bore size	AB	AO	AV	FD	LS	LT	NH	TF	TR	UR	US	(W)	(XL)	(XS)
32	7	7	14	7	96	4	28	28	52	49	66	34	120	48
40	9	10	20	9	129	5	33	30	60	58	80	40	154	60

Refer to page 63 of Standard Type Single Rod for details of accessories (rod end, floating joint).

Dimensions

Bracket is shipped together with the product.

Trunnion: C□75WE□−□U
(With mounting bracket)

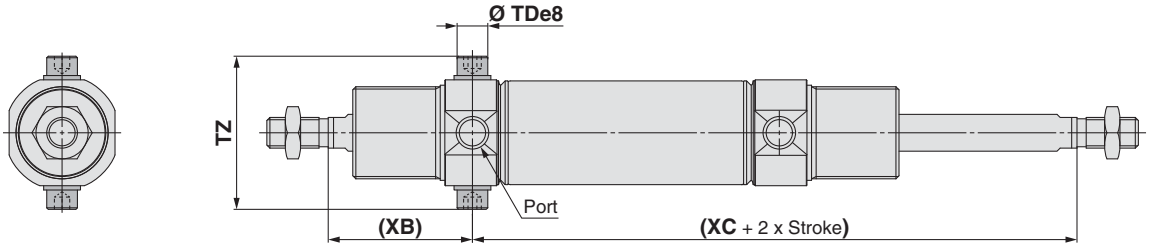

[mm]

Bore size	TDe8	TZ	(XB)	(XC)
32	$10^{-0.025}_{-0.047}$	49.9	47	97
40	$12^{-0.032}_{-0.059}$	62.3	57	122

Clevis: C□75WE□−□N
(With mounting bracket)

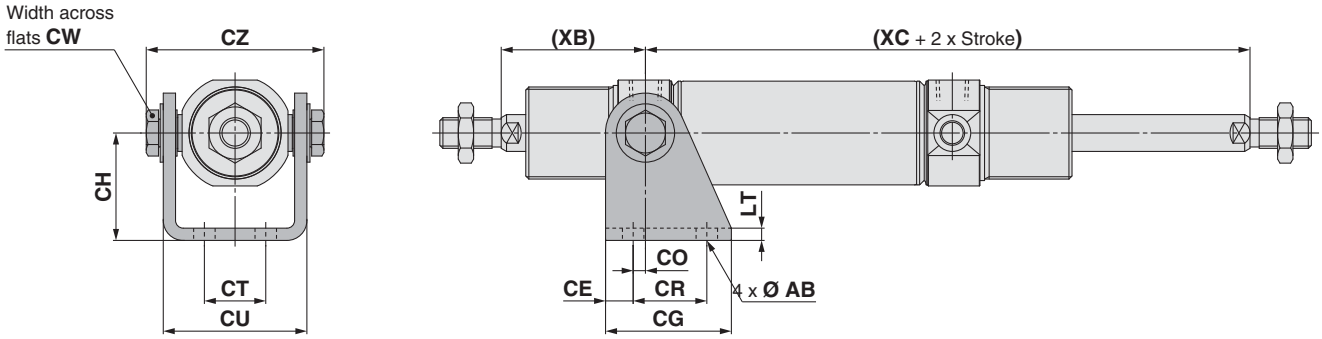

[mm]

Bore size	AB	CE	CG	CH	CO	CR	CT	CU	CW	CZ	LT	(XB)	(XC)
32	7	9	41	35	4	24	20	46.8	13	57.9	4	47	97
40	9	12	52	40	3	30	28	58.2	17	72.3	5	57	122

Refer to page 63 of Standard Type Single Rod for details of accessories (rod end, floating joint).

Air Cylinder: Standard
Single Acting, Spring Return/Extend
C75 Series
Ø 32, Ø 40

RoHS

How to Order

Single acting, Spring return/extend C D 75 E 32 – 100 S L V – B – M9BW ☐ – ☐

Built-in magnet

—	None
D	Built-in magnet

Head cover type

E	Double end boss-cut
F	Boss-cut/Basic
Y	Head cover axial port

Applicable head cover

Action	Head cover type		
	E	F	Y
Single acting, Spring return	●	●	●
Single acting, Spring extend	●	●	—

Bore size

32	32 mm
40	40 mm

Cylinder stroke [mm]
Refer to the next page for standard strokes.

Action

S	Single acting, Spring return
T	Single acting, Spring extend

Auto switch mounting type∗1

A	Rail mounting
B	Band mounting

∗1 The symbol is "—" for no magnet.

Accessory∗1

—	None
V	Rod end

∗1 Refer to Mounting Brackets/Accessories on page 72 for details of accessories.
∗ Accessory is shipped together with the product.

Number of auto switches

—	2
S	1
n	n

Auto switch

—	Without auto switch

∗ For applicable auto switches, refer to the table below.
∗ Auto switches are shipped together with the product.

Made to order
For details, refer to page 71.

Mounting bracket∗1

—	None
L	Single foot
M	Double foot
G	Flange
U	Trunnion
N	Clevis

∗1 Refer to Mounting Brackets/Accessories on page 72 for details of mounting brackets.
∗ Mounting bracket is shipped together with the product.

Applicable mounting bracket

Action	Head cover type	Mounting bracket				
		L	M	G	U	N
Single acting, Spring return	E	●	●	●	●	●
	F	●	—	●	●	●
	Y	●	—	●	●	●
Single acting, Spring extend	E	●	●	●	●	●
	F	●	—	●	●	●

Applicable Auto Switches/Refer to the **Auto Switch** Guide for further information.

Type	Special function	Electrical entry	Indicator light	Wiring (Output)	Load voltage DC	Load voltage AC	Auto switch model: Band mounting Perpendicular	Band mounting In-line	Rail mounting Perpendicular	Rail mounting In-line	Lead wire length [m] 0.5 (—)	1 (M)	3 (L)	5 (Z)	None (N)	Pre-wired connector	Applicable load	
Solid state auto switch	—	Grommet	Yes	3-wire (NPN)	5 V, 12 V	—	M9NV	M9N	F7NV	F79	●	●	●	○	—	○	IC circuit	Relay, PLC
				3-wire (PNP)			M9PV	M9P	F7PV	F7P	●	●	●	○	—	○		
				2-wire	12 V		M9BV	M9B	F7BV	J79	●	●	●	○	—	○	—	
		Connector					—	H7C	J79C	—	●	—	●	●	●	—		
	Diagnostic indication (2-colour indicator)	Grommet		3-wire (NPN)	5 V, 12 V		M9NWV	M9NW	F7NWV	F79W	●	●	●	○	—	○	IC circuit	
				3-wire (PNP)			M9PWV	M9PW	—	F7PW	●	●	●	○	—	○		
				2-wire	12 V		M9BWV	M9BW	F7BWV	J79W	●	●	●	○	—	○	—	
	Water resistant (2-colour indicator)			3-wire (NPN)	5 V, 12 V		M9NAV∗1	M9NA∗1	—	—	○	○	●	○	—	○	IC circuit	
				3-wire (PNP)			M9PAV∗1	M9PA∗1	—	—	○	○	●	○	—	○		
				2-wire	12 V		M9BAV∗1	M9BA∗1	F7BAV∗1	F7BA∗1	○	○	●	○	—	○	—	
	With diagnostic output (2-colour indicator)			4-wire (NPN)	5 V, 12 V		—	H7NF	—	F79F	●	—	●	○	—	○	IC circuit	
Reed auto switch	—	Grommet	Yes	3-wire (NPN equivalent)	5 V	—	A96V	A96	—	A76H	●	—	●	—	—	—	IC circuit	—
				2-wire	—	200 V	—	—	A72	A72H	●	—	●	—	—	—	—	Relay, PLC
					24 V, 12 V	100 V	A93V∗2	A93	A73∗2	A73H∗2	●	●	●	●	—	—		
			No			100 V or less	A90V	A90	A80	A80H	●	—	●	—	—	—	IC circuit	
			Yes			—	—	C73C	A73C	—	●	—	●	●	●	—	—	
		Connector	No			24 V or less	—	C80C	A80C	—	●	—	●	●	●	—	IC circuit	
	Diagnostic indication (2-colour indicator)	Grommet	Yes		—	—	—	—	A79W	—	●	—	●	—	—	—	—	

∗1 Water resistant type auto switches can be mounted on the above models, but SMC cannot guarantee water resistance. Please contact SMC regarding water resistant types with the above model numbers.
∗2 1 m lead wire is only applicable to the D-A93.
∗ Lead wire length symbols: 0.5 m····· — (Example) M9NW
1 m····· M (Example) M9NWM
3 m····· L (Example) M9NWL
5 m····· Z (Example) M9NWZ
None····· N (Example) H7CN

∗ Since there are other applicable auto switches than listed above, refer to page 111 for details.
∗ Solid state auto switches marked with "○" are produced upon receipt of order.
∗ D-A9□/M9□/A7□/A80□/F7□/J7□ auto switches are shipped together, but not assembled. (For band mounting, only the auto switch mounting brackets are assembled before shipment.)

Specifications

Bore size [mm]	32	40
Type	Pneumatic	
Action	Single acting, Single rod	
Fluid	Air	
Proof pressure	1.5 MPa	
Max. operating pressure	1.0 MPa	
Min. operating pressure	Spring return: 0.18 MPa Spring extend: 0.23 MPa	
Ambient and fluid temperature	Without auto switch: -20 °C to 80 °C (No freezing)	
	With auto switch: -10 °C to 60 °C (No freezing)	
Lubricant	Not required (Non-lube)	
Stroke length tolerance	$^{+1.4}_{0}$ mm	
Piston speed	50 to 750 mm/s	
Cushion	Rubber bumper	
Allowable kinetic energy	0.65 J	1.2 J

Symbol

Single acting: Spring return, Rubber bumper

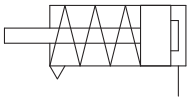

Single acting: Spring extend, Rubber bumper

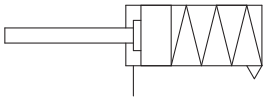

Refer to pages 101 to 111 for cylinders with auto switches.

- Auto Switch Proper Mounting Position (Detection at stroke end) and Mounting Height
- Minimum Stroke for Auto Switch Mounting
- Operating Range
- Auto Switch Mounting Brackets/Part No.

Standard Strokes

Bore size [mm]	Standard stroke [mm]*2	Max. stroke [mm]
32	10, 25, 50, 100, 150, 200, 250*1	200
40		250

*1 Not available for Ø 32.
*2 Other strokes are available on request. (Made to order)

Spring Retracting Force

Spring Return

[N]

Bore size [mm]	Standard stroke [mm]	Spring force 10 Rod extended	10 Rod retracted	25 Rod extended	25 Rod retracted	50 Rod extended	50 Rod retracted	100 Rod extended	100 Rod retracted	150 Rod extended	150 Rod retracted	200 Rod extended	200 Rod retracted	250 Rod extended	250 Rod retracted
32	10, 25, 50, 100, 150, 200	53.9	48.8	53.9	41.2	53.9	28.4	66.7	19.6	66.7	18.1	66.7	19.6	—	—
40	10, 25, 50, 100, 150, 200, 250	78.5	72.6	78.5	63.7	78.5	49.0	76.5	23.5	76.5	23.5	76.5	23.5	76.5	23.5

Spring Extend

[N]

Bore size [mm]	Standard stroke [mm]	Spring force 10 Rod retracted	10 Rod extended	25 Rod retracted	25 Rod extended	50 Rod retracted	50 Rod extended	100 Rod retracted	100 Rod extended	150 Rod retracted	150 Rod extended	200 Rod retracted	200 Rod extended	250 Rod retracted	250 Rod extended
32	10, 25, 50, 100, 150, 200	66.7	56.3	66.7	40.7	66.7	14.7	66.7	19.6	66.7	18.1	66.7	19.6	—	—
40	10, 25, 50, 100, 150, 200, 250	76.5	65.9	76.5	50.0	76.5	23.5	76.5	23.5	76.5	23.5	76.5	23.5	76.5	23.5

Made to Order

Made to Order

(For details, refer to pages 115 to 120.)

Symbol	Specifications
-XA	Change of rod end shape
-XC6□	Made of stainless steel

Option: Ordering Example of Cylinder Assembly

Cylinder model: CD75E40-50SNV-B-M9BW

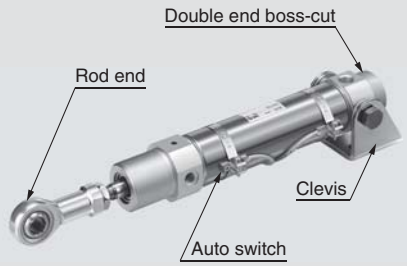

Head cover E: Double end boss-cut
Mounting bracket N: Clevis
Rod end bracket V: Rod end
Auto switch D-M9BW: Band mounting, 2 pcs.

* Mounting bracket, rod end, and auto switch are shipped together with the product.

⚠ Precautions

Be sure to read this before handling the products. Refer to the back cover for safety instructions. For actuator and auto switch precautions, refer to the "Handling Precautions for SMC Products" and the "Operation Manual" on the SMC website: http://www.smc.eu

Mounting Brackets/Accessories

Mounting bracket/Accessory			Standard (mounted to the body)		Mounting bracket (shipped together)						Accessory (shipped together)
			Mounting nut	Rod end nut	Mounting nut	Foot/ Flange	Trunnion pin	Trunnion washer	Clevis pivot bracket	Clevis bolt	Rod end
Mounting bracket symbol	L	Single foot	● (1 pc.)	● (1 pc.)	—	● (1 pc.)	—	—	—	—	—
	M	Double foot	● (1 pc.)	● (1 pc.)	● (1 pc.)	● (2 pcs.)	—	—	—	—	—
	G	Flange	● (1 pc.)	● (1 pc.)	—	● (1 pc.)	—	—	—	—	—
	U	Trunnion	● (1 pc.)	● (1 pc.)	—	—	● (2 pcs.)	● (2 pcs.)	—	—	—
	N	Clevis	● (1 pc.)	● (1 pc.)	—	—	—	● (2 pcs.)	● (1 pc.)	● (2 pcs.)	—
Accessory symbol	V	Rod end	● (1 pc.)	● (1 pc.)	—	—	—	—	—	—	● (1 pc.)

Mounting Bracket/Accessory Part Nos.

Mounting bracket/Accessory		Bore size [mm]		Contents
		32	40	
Mounting bracket	Rod end nut	C75NT32Z	C75NT40Z	1 rod end nut
	Mounting nut	C75SN32Z	C75SN40Z	1 mounting nut
	Flange, Foot (1 pc.)	C75F32AZ	C75F40AZ	1 flange/foot
	Flange, Foot (2 pcs. with 1 mounting nut)	C75F32BZ	C75F40BZ	2 flanges/foots, 1 mounting nut
	Flange, Foot (1 pc. with 1 mounting nut)	C75F32CZ	C75F40CZ	1 flange/foot, 1 mounting nut
	Trunnion	C75T32Z	C75T40Z	2 trunnion pins, 2 trunnion washers
	Clevis	C75C32Z	C75C40Z	1 clevis pivot bracket, 2 clevis bolts, 2 trunnion washers
Accessory	Rod end	KJ10DA	KJ12DA	1 rod end
	Floating joint	JA25-10-150	JA40-12-175	

∗ Refer to page 63 for dimensions of accessories.

Replacement Parts: For Standard Type (Only for single acting, spring extend)

Bore size [mm]	Part no.	Note
32	C75A-32PS	Every set includes: 1 rod seal 1 flat washer 1 retaining ring
40	C75A-40PS	

∗ When replacing the seals, use **grease (GR-S-010: ordered separately)** on the sliding parts.
In the single acting, spring return type, there is no rod seal so it is not possible to replace any seals.

Weights

Single Acting, Spring Return (S)

[kg]

Bore size [mm]				32	40
Basic weight	Without magnet	1 to 50 mm stroke	C75E□-□S	0.34	0.65
			C75F□-□S	0.32	0.61
			C75Y□-□S	0.32	0.61
		51 to 100 mm stroke	C75E□-□S	0.55	0.86
			C75F□-□S	0.53	0.81
			C75Y□-□S	0.53	0.81
		101 to 150 mm stroke	C75E□-□S	0.65	0.97
			C75F□-□S	0.62	0.92
			C75Y□-□S	0.62	0.92
		151 to 200 mm stroke	C75E□-□S	0.74	1.07
			C75F□-□S	0.71	1.03
			C75Y□-□S	0.71	1.03
		201 to 250 mm stroke	C75E□-□S	—	1.17
			C75F□-□S	—	1.13
			C75Y□-□S	—	1.13
	With magnet	1 to 50 mm stroke	CD75E□-□S	0.35	0.66
			CD75F□-□S	0.32	0.61
			CD75Y□-□S	0.32	0.62
		51 to 100 mm stroke	CD75E□-□S	0.56	0.86
			CD75F□-□S	0.54	0.82
			CD75Y□-□S	0.54	0.82
		101 to 150 mm stroke	CD75E□-□S	0.65	0.97
			CD75F□-□S	0.63	0.93
			CD75Y□-□S	0.63	0.93
		151 to 200 mm stroke	CD75E□-□S	0.74	1.08
			CD75F□-□S	0.72	1.03
			CD75Y□-□S	0.72	1.04
		201 to 250 mm stroke	CD75E□-□S	—	1.18
			CD75F□-□S	—	1.13
			CD75Y□-□S	—	1.14
Additional weight per 10 mm of stroke				0.02	0.03
Mounting bracket	Flange, Foot (1 pc.)		C75F□AZ	0.11	0.2
	Flange, Foot (2 pcs. with 1 mounting nut)		C75F□BZ	0.25	0.46
	Trunnion		C75T□Z	0.02	0.03
	Clevis		C75C□Z	0.17	0.31
Accessory	Rod end		KJ□DA	0.07	0.11
	Floating joint		JA□-□-□	0.07	0.16

Calculation example: **C75E32-50SNV**
- Basic weight ····· 0.34 kg (Ø 32)
- Additional weight ··· 0.02 kg (at 10 mm stroke)
- Cylinder stroke ····· 50 mm
- Mounting bracket: Clevis ··· 0.17 kg
- Accessory: Rod end ····· 0.07 kg

0.34 + 0.02 x 50/10 + 0.17 + 0.07 = **0.68 kg**

Single Acting, Spring Extend (T)

[kg]

Bore size [mm]				32	40
Basic weight	Without magnet	1 to 50 mm stroke	C75E□-□T	0.39	0.71
			C75F□-□T	0.36	0.67
		51 to 100 mm stroke	C75E□-□T	0.45	0.8
			C75F□-□T	0.42	0.75
		101 to 150 mm stroke	C75E□-□T	0.51	0.88
			C75F□-□T	0.48	0.84
		151 to 200 mm stroke	C75E□-□T	0.57	0.96
			C75F□-□T	0.54	0.92
		201 to 250 mm stroke	C75E□-□T	—	1.04
			C75F□-□T	—	0.99
	With magnet	1 to 50 mm stroke	CD75E□-□T	0.39	0.72
			CD75F□-□T	0.37	0.67
		51 to 100 mm stroke	CD75E□-□T	0.45	0.8
			CD75F□-□T	0.43	0.76
		101 to 150 mm stroke	CD75E□-□T	0.51	0.89
			CD75F□-□T	0.49	0.84
		151 to 200 mm stroke	CD75E□-□T	0.57	0.97
			CD75F□-□T	0.55	0.92
		201 to 250 mm stroke	CD75E□-□T	—	1.04
			CD75F□-□T	—	1.0
Additional weight per 10 mm of stroke				0.02	0.03
Mounting bracket	Flange, Foot (1 pc.)		C75F□AZ	0.11	0.2
	Flange, Foot (2 pcs. with 1 mounting nut)		C75F□BZ	0.25	0.46
	Trunnion		C75T□Z	0.02	0.03
	Clevis		C75C□Z	0.17	0.31
Accessory	Rod end		KJ□DA	0.07	0.11
	Floating joint		JA□-□-□	0.07	0.16

Calculation example: **C75E32-50TNV**
- Basic weight ····· 0.39 kg (Ø 32)
- Additional weight ··· 0.02 kg (at 10 mm stroke)
- Cylinder stroke ····· 50 mm
- Mounting bracket: Clevis ··· 0.17 kg
- Accessory: Rod end ····· 0.07 kg

0.39 + 0.02 x 50/10 + 0.17 + 0.07 = **0.73 kg**

Dimensions: Single Acting, Spring Return

Double end boss-cut

C□75E Bore size – Stroke S – □

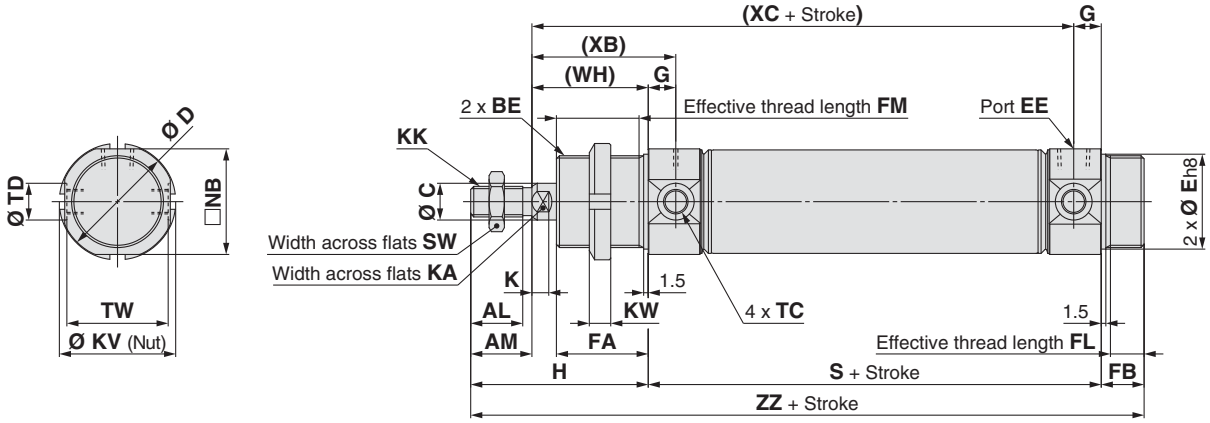

Boss-cut/Basic

C□75F Bore size – Stroke S – □

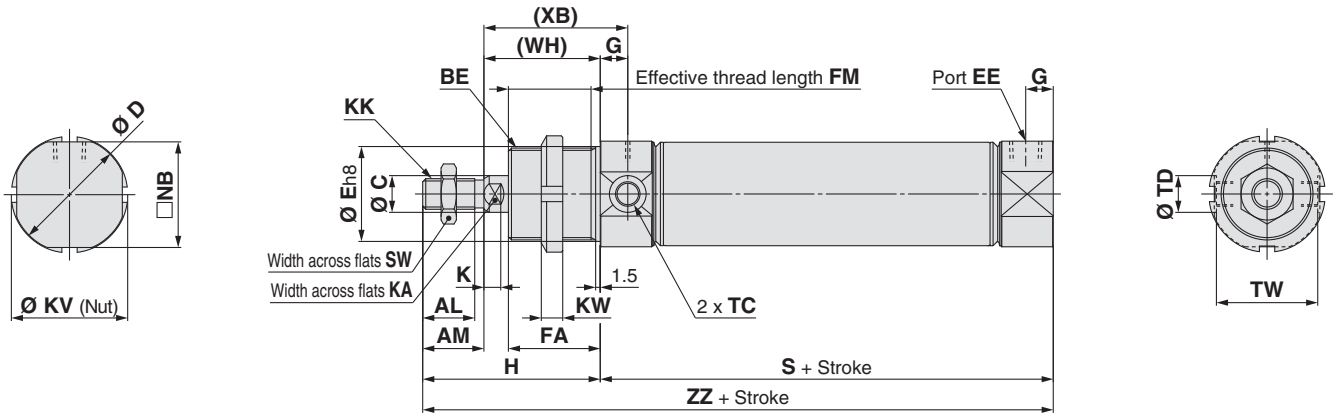

Dimensions

[mm]

Bore size	AL	AM	BE	C	D	E	EE	FA	FB	FM	FL	G	H	K	KA	KK	KV	KW
32	17	20	M30 x 1.5	12	37.5	30	G1/8	30	14	27	11	9	58	5.5	10	M10 x 1.5	38	7
40	21	24	M38 x 1.5	14	46.5	38	G1/4	35	16	32	13	12	69	7	12	M12 x 1.75	50	8

Bore size	NB	SW	TC	TD	TW	(WH)	(XB)
32	34.5	17	M8 x 1	$12^{+0.08}_{0}$	33.1	38	47
40	42.5	19	M10 x 1	$14^{+0.08}_{0}$	39.5	45	57

Double End Boss-cut

[mm]

Bore size \ Stroke \ Item	S					(XC)					ZZ				
	1 to 50	51 to 100	101 to 150	151 to 200	201 to 250	1 to 50	51 to 100	101 to 150	151 to 200	201 to 250	1 to 50	51 to 100	101 to 150	151 to 200	201 to 250
32	68	118	143	168	—	97	147	172	197	—	140	190	215	240	—
40	89	139	164	189	214	122	172	197	222	247	174	224	249	274	299

Boss-cut/Basic

[mm]

Bore size \ Stroke \ Item	S					ZZ				
	1 to 50	51 to 100	101 to 150	151 to 200	201 to 250	1 to 50	51 to 100	101 to 150	151 to 200	201 to 250
32	68	118	143	168	—	126	176	201	226	—
40	89	139	164	189	214	158	208	233	258	283

Refer to page 63 of Standard Type Single Rod for details of accessories (rod end, floating joint).

Dimensions: Single Acting, Spring Return

Head cover axial port

C□75Y Bore size – Stroke S – □

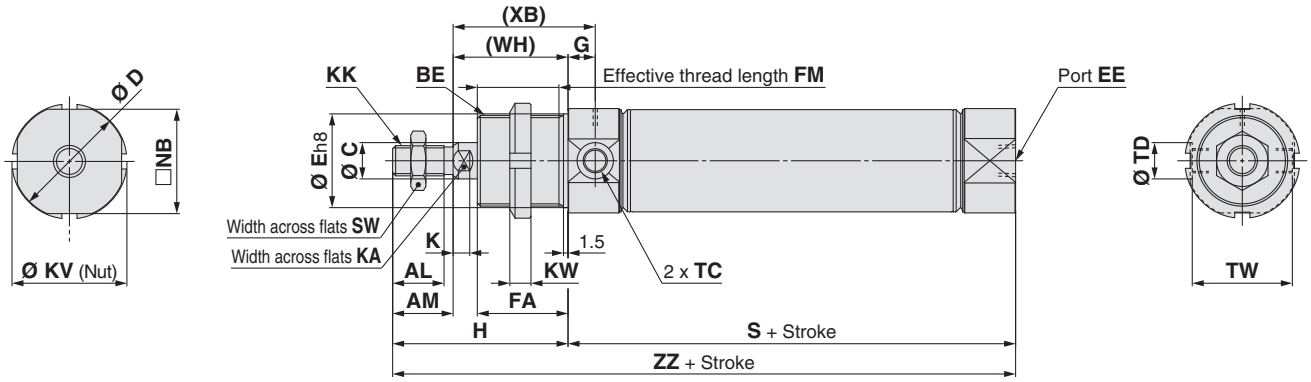

Dimensions

[mm]

Bore size	AL	AM	BE	C	D	E	EE	FA	FM	G	H	K	KA	KK	KV	KW	NB	SW
32	17	20	M30 x 1.5	12	37.5	30	G1/8	30	27	9	58	5.5	10	M10 x 1.5	38	7	34.5	17
40	21	24	M38 x 1.5	14	46.5	38	G1/4	35	32	12	69	7	12	M12 x 1.75	50	8	42.5	19

Bore size	TC	TD	TW	(WH)	(XB)	S					ZZ				
						1 to 50	51 to 100	101 to 150	151 to 200	201 to 250	1 to 50	51 to 100	101 to 150	151 to 200	201 to 250
32	M8 x 1	$12^{+0.08}_{0}$	33.1	38	47	68	118	143	168	—	126	176	201	226	—
40	M10 x 1	$14^{+0.08}_{0}$	39.5	45	57	89	139	164	189	214	158	208	233	258	283

Refer to page 63 of Standard Type Single Rod for details of accessories (rod end, floating joint).

Dimensions: Single Acting, Spring Return

Bracket is shipped together with the product.

Single foot: C□75E□−□SL/Flange: C□75E□−□SG (With mounting bracket)

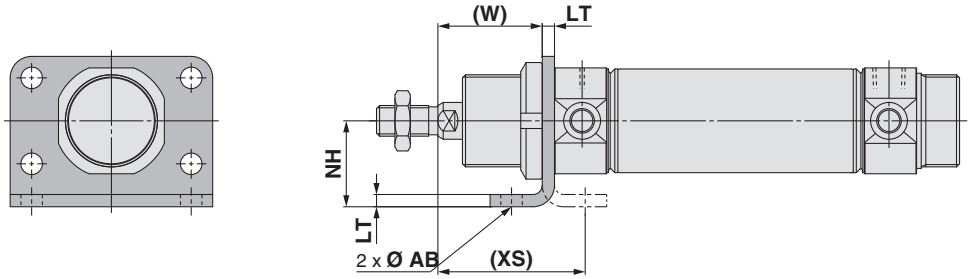

Double foot: C□75E□−□SM (With mounting bracket)

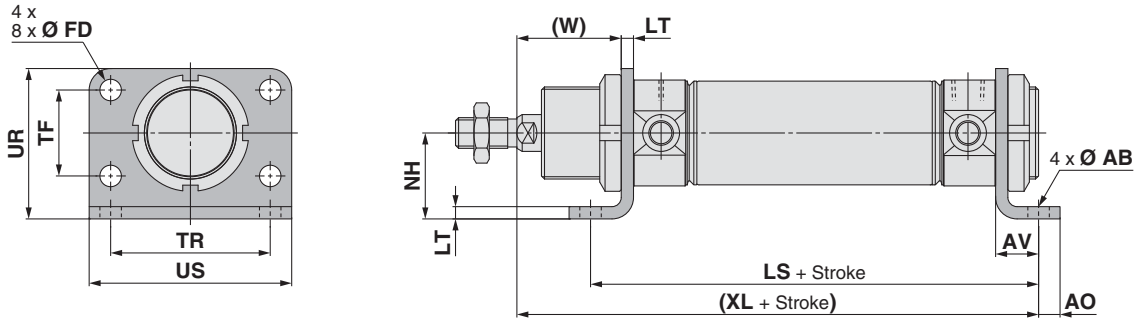

[mm]

Bore size	AB	AO	AV	FD	LS					LT	NH	TF	TR	UR	US	(W)	(XL)					(XS)
					1 to 50	51 to 100	101 to 150	151 to 200	201 to 250								1 to 50	51 to 100	101 to 150	151 to 200	201 to 250	
32	7	7	14	7	96	146	171	196	—	4	28	28	52	49	66	34	120	170	195	220	—	48
40	9	10	20	9	129	179	204	229	254	5	33	30	60	58	80	40	154	204	229	254	279	60

Rod trunnion: C□75E□−□SU (With mounting bracket)

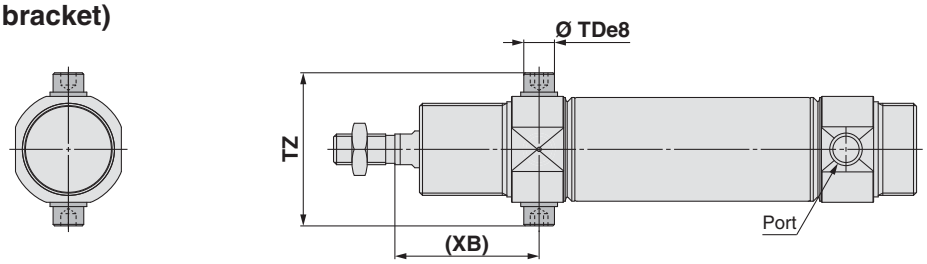

Head trunnion: C□75E□−□SU (With mounting bracket)

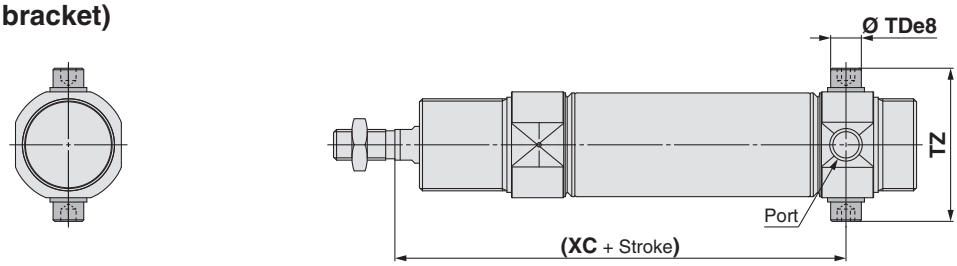

[mm]

Bore size	TDe8	TZ	(XB)	(XC)				
				1 to 50	51 to 100	101 to 150	151 to 200	201 to 250
32	$10^{-0.025}_{-0.047}$	49.9	47	97	147	172	197	—
40	$12^{-0.032}_{-0.059}$	62.3	57	122	172	197	222	247

Refer to page 63 of Standard Type Single Rod for details of accessories (rod end, floating joint).

Dimensions: Single Acting, Spring Return

Bracket is shipped together with the product.

Rod clevis: C□75E□−□SN
(With mounting bracket)

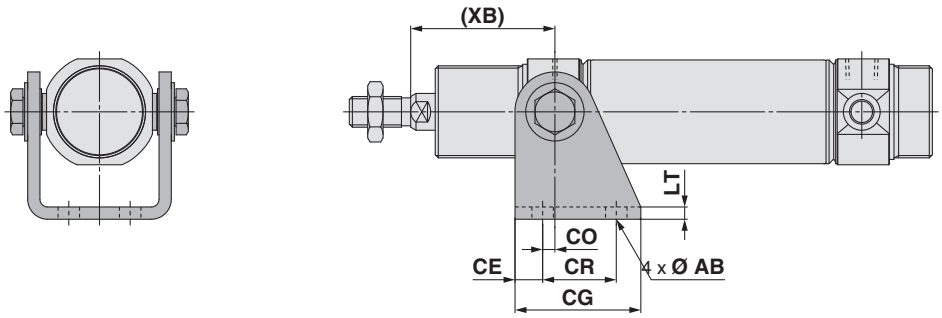

Head clevis: C□75E□−□SN
(With mounting bracket)

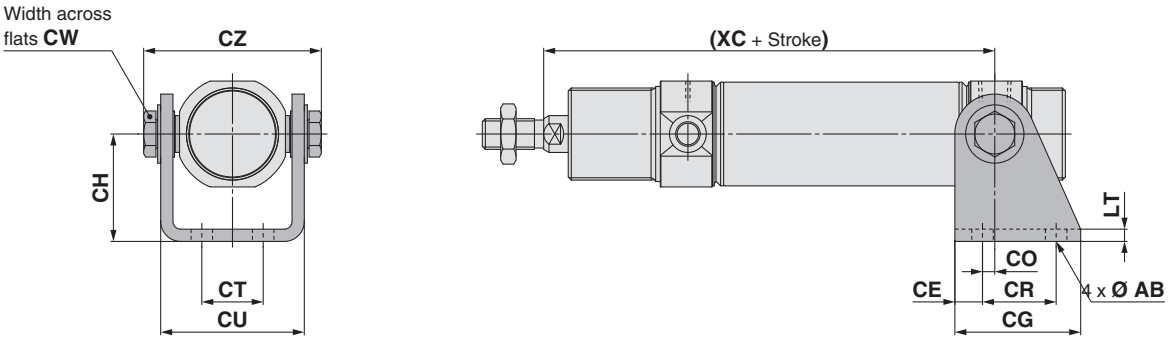

[mm]

Bore size	AB	CE	CG	CH	CO	CR	CT	CU	CW	CZ	LT	(XB)	(XC)				
													1 to 50	51 to 100	101 to 150	151 to 200	201 to 250
32	7	9	41	35	4	24	20	46.8	13	57.9	4	47	97	147	172	197	—
40	9	12	52	40	3	30	28	58.2	17	72.3	5	57	122	172	197	222	247

Refer to page 63 of Standard Type Single Rod for details of accessories (rod end, floating joint).

Dimensions: Single Acting, Spring Extend

Double end boss-cut

C□75E Bore size **–** Stroke **T –** □

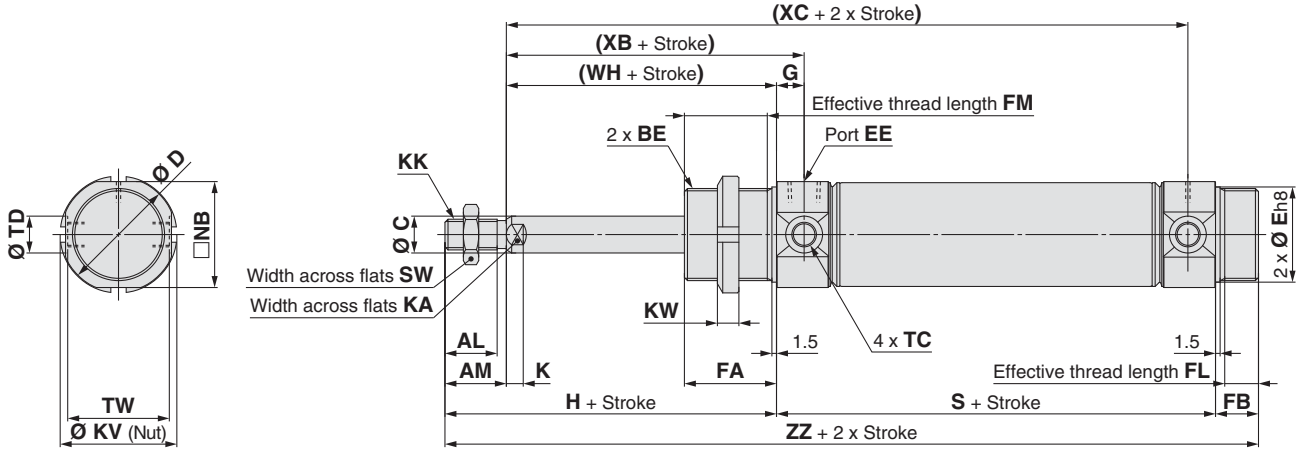

Boss-cut/Basic

C□75F Bore size **–** Stroke **T –** □

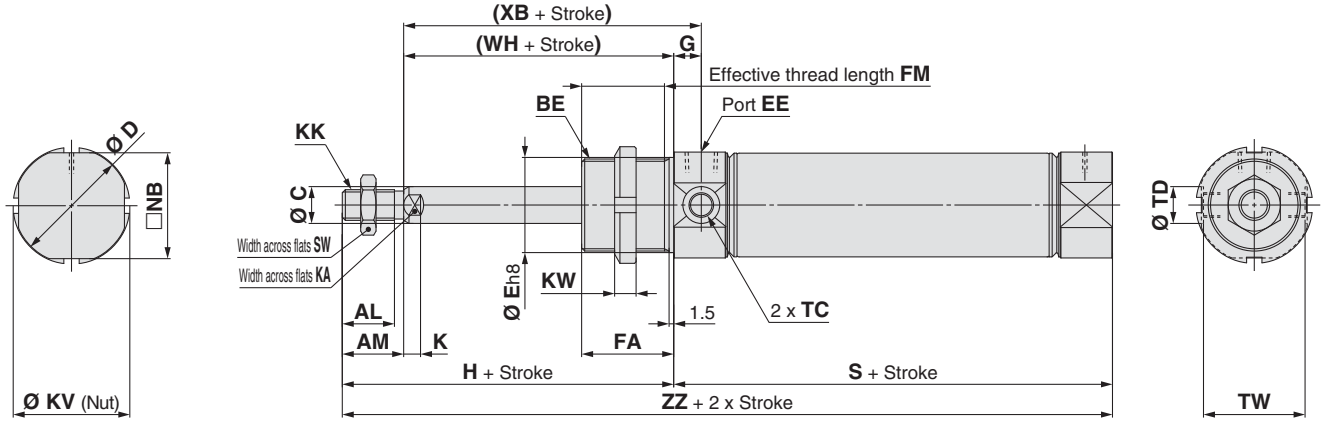

Dimensions

[mm]

Bore size	AL	AM	BE	C	D	E	EE	FA	FB	FM	FL	G	H	K	KA	KK	KV	KW	NB	SW	TC	TD	TW	(WH)	(XB)
32	17	20	M30 x 1.5	12	37.5	30	G1/8	30	14	27	11	9	58	5.5	10	M10 x 1.5	38	7	34.5	17	M8 x 1	$12^{+0.08}_{0}$	33.1	38	47
40	21	24	M38 x 1.5	14	46.5	38	G1/4	35	16	32	13	12	69	7	12	M12 x 1.75	50	8	42.5	19	M10 x 1	$14^{+0.08}_{0}$	39.5	45	57

Double End Boss-cut

[mm]

Bore size \ Stroke \ Item	S					(XC)					ZZ				
	1 to 50	51 to 100	101 to 150	151 to 200	201 to 250	1 to 50	51 to 100	101 to 150	151 to 200	201 to 250	1 to 50	51 to 100	101 to 150	151 to 200	201 to 250
32	93	118	143	168	—	122	147	172	197	—	165	190	215	240	—
40	114	139	164	189	214	147	172	197	222	247	199	224	249	274	299

Boss-cut/Basic

[mm]

Bore size \ Stroke \ Item	S					ZZ				
	1 to 50	51 to 100	101 to 150	151 to 200	201 to 250	1 to 50	51 to 100	101 to 150	151 to 200	201 to 250
32	93	118	143	168	—	151	176	201	226	—
40	114	139	164	189	214	183	208	233	258	283

Refer to page 63 of Standard Type Single Rod for details of accessories (rod end, floating joint).

Dimensions: Single Acting, Spring Extend

Bracket is shipped together with the product.

Single foot: C□75E□−□TL/Flange: C□75E□−□TG (With mounting bracket)

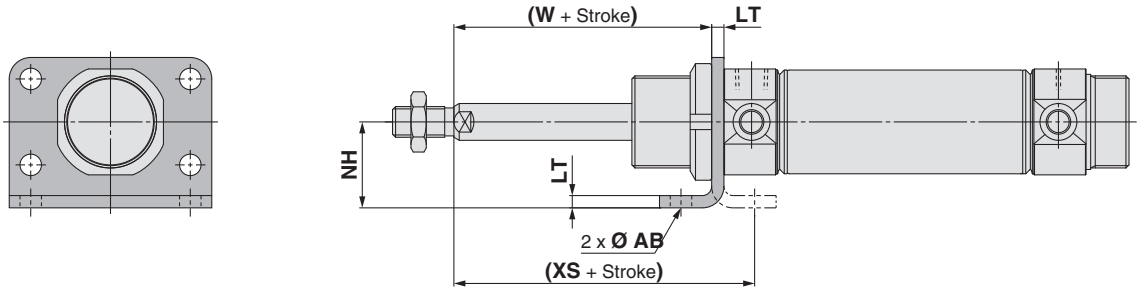

Double foot: C□75E□−□TM (With mounting bracket)

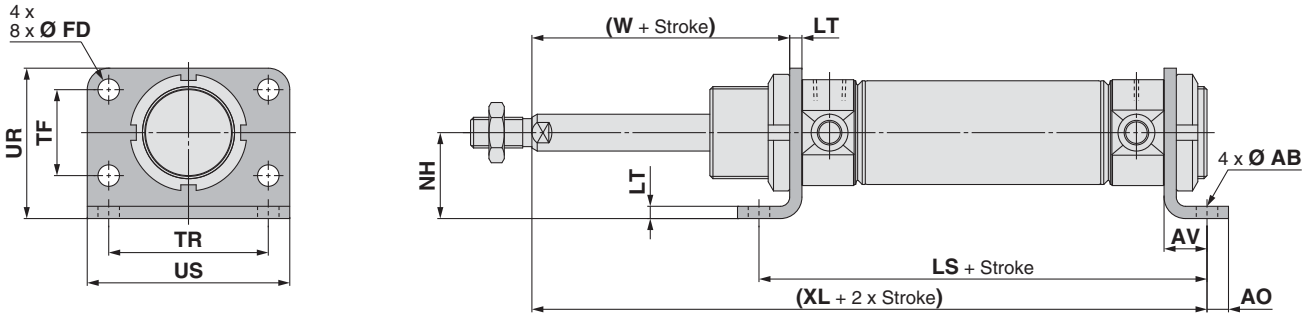

[mm]

Bore size	AB	AO	AV	FD	LS					LT	NH	TF	TR	UR	US	(W)	(XL)					(XS)
					1 to 50	51 to 100	101 to 150	151 to 200	201 to 250								1 to 50	51 to 100	101 to 150	151 to 200	201 to 250	
32	7	7	14	7	121	146	171	196	—	4	28	28	52	49	66	34	145	170	195	220	—	48
40	9	10	20	9	154	179	204	229	254	5	33	30	60	58	80	40	179	204	229	254	279	60

Rod trunnion: C□75E□−□TU (With mounting bracket)

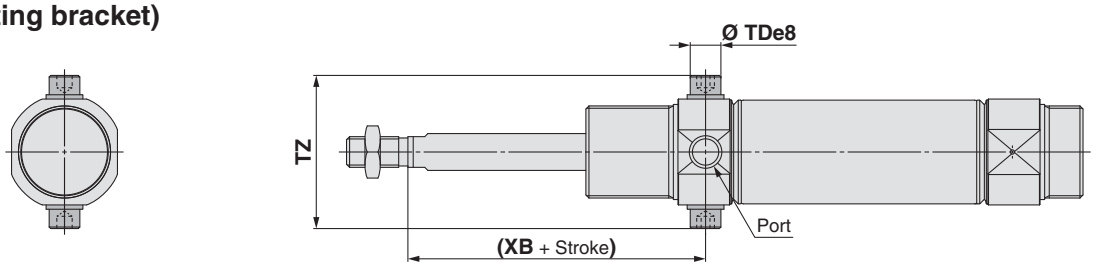

Head trunnion: C□75E□−□TU (With mounting bracket)

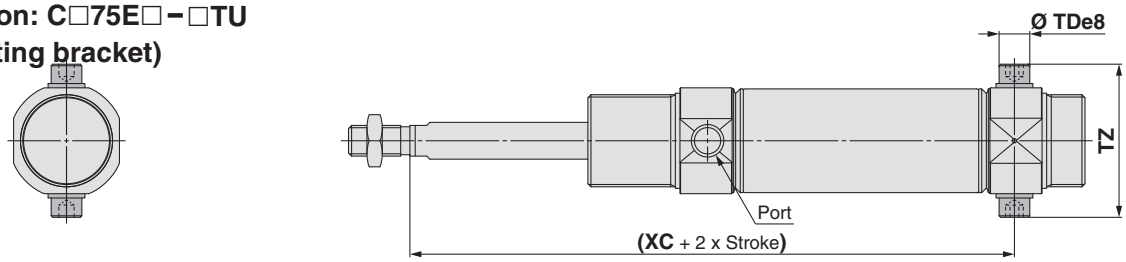

[mm]

Bore size	TDe8	TZ	(XB)	(XC)				
				1 to 50	51 to 100	101 to 150	151 to 200	201 to 250
32	$10^{-0.025}_{-0.047}$	49.9	47	122	147	172	197	—
40	$12^{-0.032}_{-0.059}$	62.3	57	147	172	197	222	247

Refer to page 63 of Standard Type Single Rod for details of accessories (rod end, floating joint).

Dimensions: Single Acting, Spring Extend

Bracket is shipped together with the product.

Rod clevis: C□75E□−□TN
(With mounting bracket)

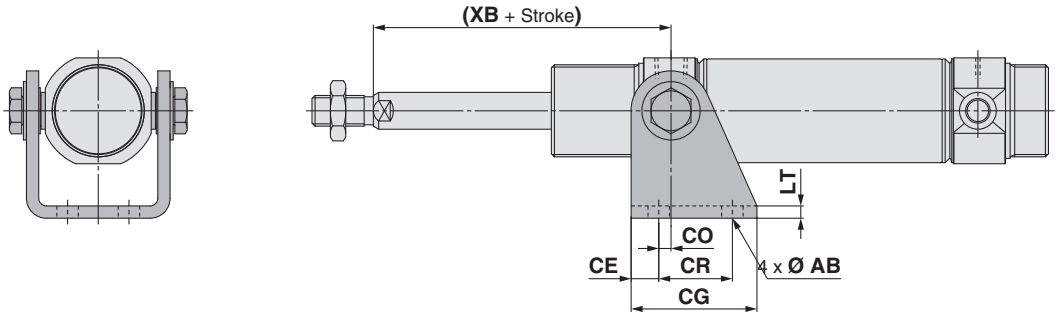

Head clevis: C□75E□−□TN
(With mounting bracket)

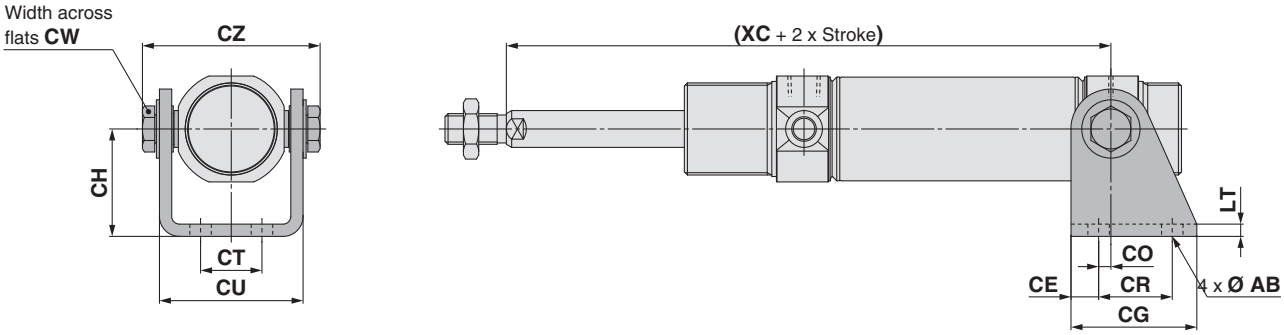

[mm]

Bore size	AB	CE	CG	CH	CO	CR	CT	CU	CW	CZ	LT	(XB)	(XC) 1 to 50	(XC) 51 to 100	(XC) 101 to 150	(XC) 151 to 200	(XC) 201 to 250
32	7	9	41	35	4	24	20	46.8	13	57.9	4	47	122	147	172	197	—
40	9	12	52	40	3	30	28	58.2	17	72.3	5	57	147	172	197	222	247

Refer to page 63 of Standard Type Single Rod for details of accessories (rod end, floating joint).

Air Cylinder: Non-rotating Rod
Double Acting, Single Rod
C75K Series
Ø 32, Ø 40

RoHS

How to Order

Double acting, Single rod C D 75K E 32 – 100 L V – B – M9BW □ – □

Built-in magnet

—	None
D	Built-in magnet

Head cover type

E	Double end boss-cut
F	Boss-cut/Basic
Y	Head cover axial port

Applicable head cover

Action	Head cover type		
	E	F	Y
Rubber bumper	●	●	●

Bore size

32	32 mm
40	40 mm

Cylinder stroke [mm]
Refer to the next page for standard strokes.

Mounting bracket∗1

—	None
L	Single foot
M	Double foot
G	Flange
U	Trunnion
N	Clevis

Applicable mounting bracket

Action	Head cover type	Mounting bracket				
		L	M	G	U	N
Rubber bumper	E	●	●	●	●	●
	F	●	—	●	●	●
	Y	●	—	●	●	●

∗1 Refer to Mounting Brackets/Accessories on page 83 for details of mounting brackets.
∗ Mounting bracket is shipped together with the product.

Auto switch mounting type∗1

A	Rail mounting
B	Band mounting

∗1 The symbol is "—" for no magnet.

Accessory∗1

—	None
V	Rod end

∗1 Refer to Mounting Brackets/ Accessories on page 83 for details of accessories.
∗ Accessory is shipped together with the product.

Auto switch

—	Without auto switch

∗ For applicable auto switches, refer to the table below.
∗ Auto switches are shipped together with the product.

Number of auto switches

—	2
S	1
n	n

Made to order
For details, refer to page 82.

Applicable Auto Switches/Refer to the **Auto Switch** Guide for further information.

Type	Special function	Electrical entry	Indicator light	Wiring (Output)	Load voltage DC	Load voltage AC	Auto switch model: Band mounting Perpendicular	Band mounting In-line	Rail mounting Perpendicular	Rail mounting In-line	Lead wire length [m] 0.5 (—)	1 (M)	3 (L)	5 (Z)	None (N)	Pre-wired connector	Applicable load	
Solid state auto switch	—	Grommet	Yes	3-wire (NPN)	5 V, 12 V	—	M9NV	M9N	F7NV	F79	●	●	●	○	—	○	IC circuit	Relay, PLC
				3-wire (PNP)			M9PV	M9P	F7PV	F7P	●	●	●	○	—	○		
				2-wire	12 V		M9BV	M9B	F7BV	J79	●	●	●	○	—	○	—	
		Connector					—	H7C	J79C	—	●	—	●	●	●	—		
	Diagnostic indication (2-colour indicator)	Grommet		3-wire (NPN)	5 V, 12 V		M9NWV	M9NW	F7NWV	F79W	●	●	●	○	—	○	IC circuit	
				3-wire (PNP)			M9PWV	M9PW	—	F7PW	●	●	●	○	—	○		
				2-wire	12 V		M9BWV	M9BW	F7BWV	J79W	●	●	●	○	—	○	—	
	Water resistant (2-colour indicator)			3-wire (NPN)	5 V, 12 V		M9NAV∗1	M9NA∗1	—	—	○	○	●	○	—	○	IC circuit	
				3-wire (PNP)			M9PAV∗1	M9PA∗1	—	—	○	○	●	○	—	○		
				2-wire	12 V		M9BAV∗1	M9BA∗1	F7BAV∗1	F7BA∗1	○	○	●	○	—	○	—	
	With diagnostic output (2-colour indicator)			4-wire (NPN)	5 V, 12 V		—	H7NF	—	F79F	●	—	●	○	—	○	IC circuit	
Reed auto switch	—	Grommet	Yes	3-wire (NPN equivalent)	5 V	—	A96V	A96	—	A76H	●	—	●	—	—	—	IC circuit	—
				2-wire	—	200 V	—	—	A72	A72H	●	—	●	—	—	—	—	Relay, PLC
					12 V	100 V	A93V∗2	A93	A73∗2	A73H∗2	●	●	●	●	—	—		
			No			100 V or less	A90V	A90	A80	A80H	●	—	●	—	—	—	IC circuit	
			Yes			—	—	C73C	A73C	—	●	—	●	●	●	—	—	
		Connector	No			24 V or less	—	C80C	A80C	—	●	—	●	●	●	—	IC circuit	
	Diagnostic indication (2-colour indicator)	Grommet	Yes		—	—	—	—	A79W	—	●	—	●	—	—	—	—	

∗1 Water resistant type auto switches can be mounted on the above models, but SMC cannot guarantee water resistance. Please contact SMC regarding water resistant types with the above model numbers.
∗2 1 m lead wire is only applicable to the D-A93.
∗ Lead wire length symbols: 0.5 m····· — (Example) M9NW
1 m····· M (Example) M9NWM
3 m····· L (Example) M9NWL
5 m····· Z (Example) M9NWZ
None····· N (Example) H7CN

∗ Since there are other applicable auto switches than listed above, refer to page 111 for details.
∗ Solid state auto switches marked with "○" are produced upon receipt of order.
∗ D-A9□/M9□/A7□/A80□/F7□/J7□ auto switches are shipped together, but not assembled. (For band mounting, only the auto switch mounting brackets are assembled before shipment.)

Specifications

Bore size [mm]		32	40
Type		Pneumatic	
Action		Double acting, Single rod	
Fluid		Air	
Proof pressure		1.5 MPa	
Max. operating pressure		1.0 MPa	
Min. operating pressure	**Rubber bumper**	0.05 MPa	
Ambient and fluid temperature		Without auto switch: -20 °C to 80 °C (No freezing)	
		With auto switch: -10 °C to 60 °C (No freezing)	
Lubricant		Not required (Non-lube)	
Stroke length tolerance		$^{+1.4}_{0}$ mm	
Piston speed		50 to 1500 mm/s	
Cushion		Rubber bumper	
Allowable kinetic energy		0.65 J	1.2 J
Non-rotating accuracy		±0.5°	

Symbol

Rubber bumper

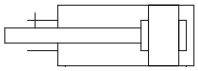

Refer to pages 101 to 111 for cylinders with auto switches.

- Auto Switch Proper Mounting Position (Detection at stroke end) and Mounting Height
- Minimum Stroke for Auto Switch Mounting
- Operating Range
- Auto Switch Mounting Brackets/Part No.

Standard Strokes

Bore size [mm]	Standard stroke [mm]*1	Max. stroke*2 [mm]
32	10, 25, 40, 50, 80, 100, 125, 160, 200, 250, 300	1000
40		

*1 Other strokes are available on request.
*2 For exceeding the standard stroke range, it will be available as a special order (-X2018).

Made to Order

(For details, refer to pages 115 to 120.)

Symbol	Specifications
-XA	Change of rod end shape

Option: Ordering Example of Cylinder Assembly

Cylinder model: CD75KE40-50NV-B-M9BW

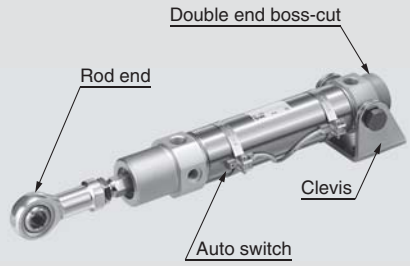

Head cover E: Double end boss-cut
Mounting bracket N: Clevis
Rod end bracket V: Rod end
Auto switch D-M9BW: Band mounting, 2 pcs.

* Mounting bracket, rod end, and auto switch are shipped together with the product.

⚠ Precautions

Be sure to read this before handling the products. Refer to the back cover for safety instructions. For actuator and auto switch precautions, refer to the "Handling Precautions for SMC Products" and the "Operation Manual" on the SMC website: http://www.smc.eu

Mounting Brackets/Accessories

Mounting bracket/Accessory			Standard (mounted to the body)		Mounting bracket (shipped together)						Accessory (shipped together)
			Mounting nut	Rod end nut	Mounting nut	Foot/ Flange	Trunnion pin	Trunnion washer	Clevis pivot bracket	Clevis bolt	Rod end
Mounting bracket symbol	L	Single foot	● (1 pc.)	● (1 pc.)	—	● (1 pc.)	—	—	—	—	—
	M	Double foot	● (1 pc.)	● (1 pc.)	● (1 pc.)	● (2 pcs.)	—	—	—	—	—
	G	Flange	● (1 pc.)	● (1 pc.)	—	● (1 pc.)	—	—	—	—	—
	U	Trunnion	● (1 pc.)	● (1 pc.)	—	—	● (2 pcs.)	● (2 pcs.)	—	—	—
	N	Clevis	● (1 pc.)	● (1 pc.)	—	—	—	● (2 pcs.)	● (1 pc.)	● (2 pcs.)	—
Accessory symbol	V	Rod end	● (1 pc.)	● (1 pc.)	—	—	—	—	—	—	● (1 pc.)

Mounting Bracket/Accessory Part Nos.

Mounting bracket/Accessory		Bore size [mm]		Contents
		32	40	
Mounting bracket	Rod end nut	C75NT32Z	C75NT40Z	1 rod end nut
	Mounting nut	C75SN32Z	C75SN40Z	1 mounting nut
	Flange, Foot (1 pc.)	C75F32AZ	C75F40AZ	1 flange/foot
	Flange, Foot (2 pcs. with 1 mounting nut)	C75F32BZ	C75F40BZ	2 flanges/foots, 1 mounting nut
	Flange, Foot (1 pc. with 1 mounting nut)	C75F32CZ	C75F40CZ	1 flange/foot, 1 mounting nut
	Trunnion	C75T32Z	C75T40Z	2 trunnion pins, 2 trunnion washers
	Clevis	C75C32Z	C75C40Z	1 clevis pivot bracket, 2 clevis bolts, 2 trunnion washers
Accessory	Rod end	KJ10DA	KJ12DA	1 rod end
	Floating joint	JA25-10-150	JA40-12-175	

∗ Refer to page 63 for dimensions of accessories.

Replacement Parts: For Non-rotating Rod Type (K)

Bore size [mm]	Part no.	Note
32	C75K-32PS	Every set includes: 1 rod seal 1 flat washer 1 retaining ring
40	C75K-40PS	

∗ When replacing the seals, use **grease (GR-S-010: ordered separately)** on the sliding parts.

Weights

[kg]

Bore size [mm]			32	40
Basic weight	Without magnet	C75KE	0.36	0.69
		C75KF	0.34	0.64
		C75KY	0.34	0.64
	With magnet	CD75KE	0.37	0.69
		CD75KF	0.34	0.65
		CD75KY	0.34	0.65
Additional weight per 10 mm of stroke			0.02	0.03
Mounting bracket	Flange, Foot (1 pc.)	C75F□AZ	0.11	0.2
	Flange, Foot (2 pcs. with 1 mounting nut)	C75F□BZ	0.25	0.46
	Trunnion	C75T□Z	0.02	0.03
	Clevis	C75C□Z	0.17	0.31
Accessory	Rod end	KJ□DA	0.07	0.11
	Floating joint	JA□-□-□	0.07	0.16

Calculation example: **C75KE32-50NV**
- Basic weight ····· 0.36 kg (Ø 32)
- Additional weight ··· 0.02 kg (at 10 mm stroke)
- Cylinder stroke ····· 50 mm
- Mounting bracket: Clevis ··· 0.17 kg
- Accessory: Rod end ····· 0.07 kg

0.36 + 0.02 x 50/10 + 0.17 + 0.07 = **0.7 kg**

Dimensions

Double end boss-cut

C□75KE Bore size – Stroke – □

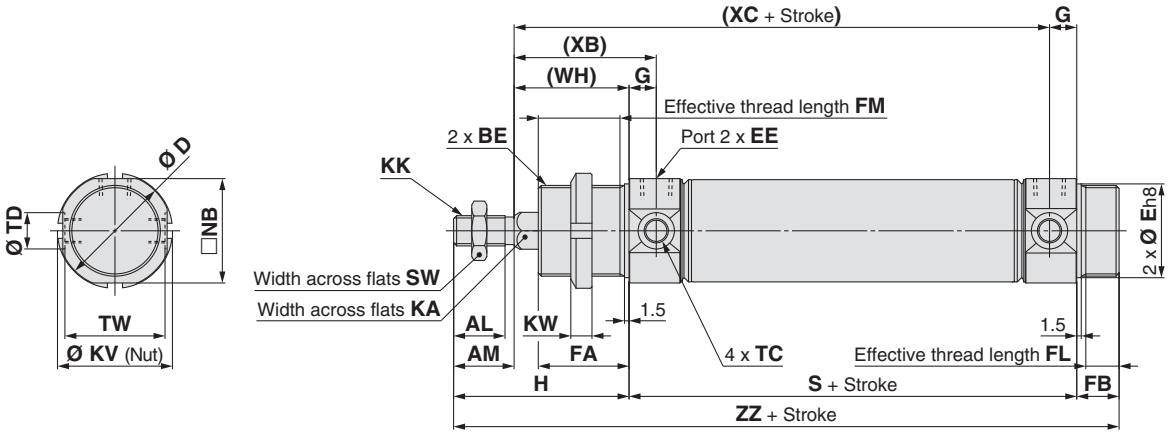

Boss-cut/Basic

C□75KF Bore size – Stroke – □

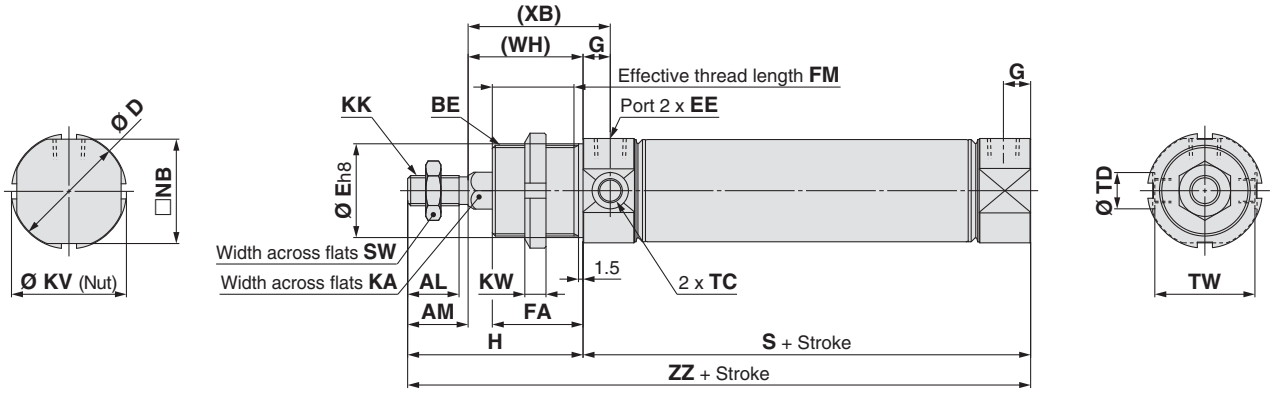

Dimensions

[mm]

Bore size	AL	AM	BE	D	E	EE	FA	FB	FM	FL	G	H	KA	KK	KV	KW	NB
32	17	20	M30 x 1.5	37.5	30	G1/8	30	14	27	11	9	58	12.2	M10 x 1.5	38	7	34.5
40	21	24	M38 x 1.5	46.5	38	G1/4	35	16	32	13	12	69	14.2	M12 x 1.75	50	8	42.5

Bore size	S	SW	TC	TD	TW	(WH)	(XB)	(XC)
32	68	17	M8 x 1	$12^{+0.08}_{0}$	33.1	38	47	97
40	89	19	M10 x 1	$14^{+0.08}_{0}$	39.5	45	57	122

Double End Boss-cut

Bore size	ZZ
32	140
40	174

Boss-cut/Basic

Bore size	ZZ
32	126
40	158

Refer to page 61 to 62 of Standard Type Single Rod for details of the mounting brackets, and refer to page 63 of Standard Type Single Rod for details of accessories (rod end, floating joint).

Dimensions

Head cover axial port

C□75KY Bore size − Stroke − □

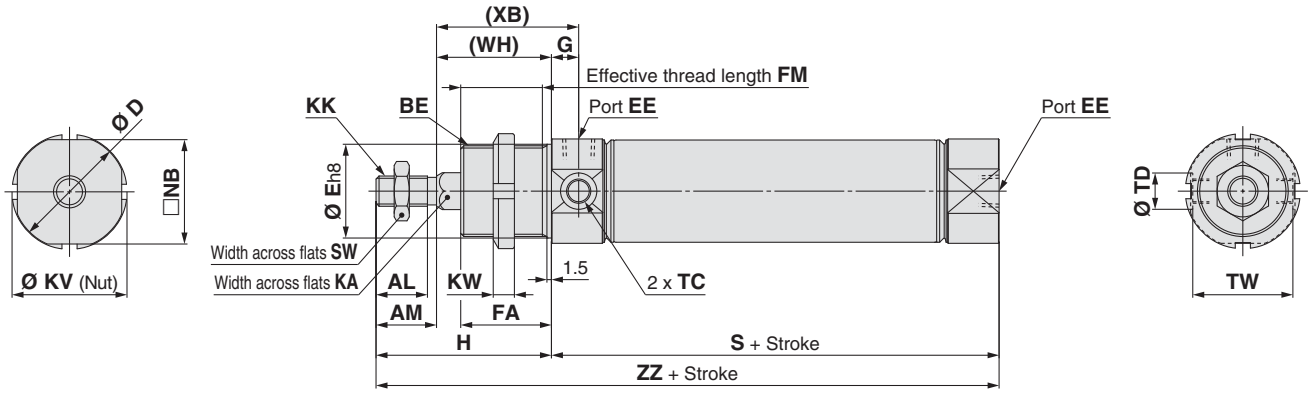

Dimensions

[mm]

Bore size	AL	AM	BE	D	E	EE	FA	FM	G	H	KA	KK	KV	KW	NB	S	SW	TC	TD	TW	(WH)	(XB)	ZZ
32	17	20	M30 x 1.5	37.5	30	G1/8	30	27	9	58	12.2	M10 x 1.5	38	7	34.5	68	17	M8 x 1	$12^{+0.08}_{0}$	33.1	38	47	126
40	21	24	M38 x 1.5	46.5	38	G1/4	35	32	12	69	14.2	M12 x 1.75	50	8	42.5	89	19	M10 x 1	$14^{+0.08}_{0}$	39.5	45	57	158

Refer to page 61 to 62 of Standard Type Single Rod for details of the mounting brackets, and refer to page 63 of Standard Type Single Rod for details of accessories (rod end, floating joint).

Air Cylinder: Non-rotating Rod
Single Acting, Spring Return/Extend
C75K Series
Ø 32, Ø 40

RoHS

How to Order

Single acting, Spring return/extend C D 75K E 32 – 100 S L V – B – M9BW □ – □

Built-in magnet

—	None
D	Built-in magnet

Head cover type

E	Double end boss-cut
F	Boss-cut/Basic
Y	Head cover axial port

Applicable head cover

Action	Head cover type		
	E	F	Y
Single acting, Spring return	●	●	●
Single acting, Spring extend	●	●	—

Bore size

32	32 mm
40	40 mm

Cylinder stroke [mm]
Refer to the next page for standard strokes.

Action

S	Single acting, Spring return
T	Single acting, Spring extend

Auto switch mounting type∗1

A	Rail mounting
B	Band mounting

∗1 The symbol is "—" for no magnet.

Accessory∗1

—	None
V	Rod end

∗1 Refer to Mounting Brackets/ Accessories on page 88 for details of accessories.
∗ Accessory is shipped together with the product.

Mounting bracket∗1

—	None
L	Single foot
M	Double foot
G	Flange
U	Trunnion
N	Clevis

∗1 Refer to Mounting Brackets/ Accessories on page 88 for details of mounting brackets.
∗ Mounting bracket is shipped together with the product.

Applicable mounting bracket

Action	Head cover type	Mounting bracket				
		L	M	G	U	N
Single acting, Spring return	E	●	●	●	●	●
	F	●	—	●	●	●
	Y	●	—	●	●	●
Single acting, Spring extend	E	●	●	●	●	●
	F	●	—	●	●	●

Number of auto switches

—	2
S	1
n	n

Auto switch

—	Without auto switch

∗ For applicable auto switches, refer to the table below.
∗ Auto switches are shipped together with the product.

Made to order
For details, refer to page 87.

Applicable Auto Switches/Refer to the **Auto Switch** Guide for further information.

Type	Special function	Electrical entry	Indicator light	Wiring (Output)	Load voltage DC	Load voltage AC	Auto switch model: Band mounting Perpendicular	Band mounting In-line	Rail mounting Perpendicular	Rail mounting In-line	Lead wire length [m] 0.5 (—)	1 (M)	3 (L)	5 (Z)	None (N)	Pre-wired connector	Applicable load	
Solid state auto switch	—	Grommet	Yes	3-wire (NPN)	5 V, 12 V	—	M9NV	M9N	F7NV	F79	●	●	●	○	—	○	IC circuit	Relay, PLC
				3-wire (PNP)			M9PV	M9P	F7PV	F7P	●	●	●	○	—	○		
				2-wire	12 V		M9BV	M9B	F7BV	J79	●	●	●	○	—	○	—	
		Connector					—	H7C	J79C	—	●	—	●	●	●	—		
	Diagnostic indication (2-colour indicator)	Grommet		3-wire (NPN)	5 V, 12 V		M9NWV	M9NW	F7NWV	F79W	●	●	●	○	—	○	IC circuit	
				3-wire (PNP)			M9PWV	M9PW	—	F7PW	●	●	●	○	—	○		
				2-wire	12 V		M9BWV	M9BW	F7BWV	J79W	●	●	●	○	—	○	—	
	Water resistant (2-colour indicator)			3-wire (NPN)	5 V, 12 V		M9NAV∗1	M9NA∗1	—	—	○	○	●	○	—	○	IC circuit	
				3-wire (PNP)			M9PAV∗1	M9PA∗1	—	—	○	○	●	○	—	○		
				2-wire	12 V		M9BAV∗1	M9BA∗1	F7BAV∗1	F7BA∗1	○	○	●	○	—	○	—	
	With diagnostic output (2-colour indicator)			4-wire (NPN)	5 V, 12 V		—	H7NF	—	F79F	●	—	●	○	—	○	IC circuit	
Reed auto switch	—	Grommet	Yes	3-wire (NPN equivalent)	5 V	—	A96V	A96	—	A76H	●	—	●	—	—	—	IC circuit	—
				2-wire	—	200 V	—	—	A72	A72H	●	—	●	—	—	—	—	Relay, PLC
					24 V 12 V	100 V	A93V∗2	A93	A73∗2	A73H∗2	●	●	●	●	—	—		
			No			100 V or less	A90V	A90	A80	A80H	●	—	●	—	—	—	IC circuit	
			Yes			—	—	C73C	A73C	—	●	—	●	●	●	—	—	
		Connector	No			24 V or less	—	C80C	A80C	—	●	—	●	●	●	—	IC circuit	
	Diagnostic indication (2-colour indicator)	Grommet	Yes		—	—	—	—	A79W	—	●	—	●	—	—	—	—	

∗1 Water resistant type auto switches can be mounted on the above models, but SMC cannot guarantee water resistance. Please contact SMC regarding water resistant types with the above model numbers.
∗2 1 m lead wire is only applicable to the D-A93.
∗ Lead wire length symbols: 0.5 m····· — (Example) M9NW
1 m····· M (Example) M9NWM
3 m····· L (Example) M9NWL
5 m····· Z (Example) M9NWZ
None····· N (Example) H7CN

∗ Since there are other applicable auto switches than listed above, refer to page 111 for details.
∗ Solid state auto switches marked with "○" are produced upon receipt of order.
∗ D-A9□/M9□/A7□/A80□/F7□/J7□ auto switches are shipped together, but not assembled. (For band mounting, only the auto switch mounting brackets are assembled before shipment.)

Specifications

Bore size [mm]		32	40
Type		Pneumatic	
Action		Single acting, Single rod	
Fluid		Air	
Proof pressure		1.5 MPa	
Max. operating pressure		1.0 MPa	
Min. operating pressure	**Rubber bumper**	Spring return: 0.18 MPa Spring extend: 0.23 MPa	
Ambient and fluid temperature		Without auto switch: -20 °C to 80 °C (No freezing)	
		With auto switch: -10 °C to 60 °C (No freezing)	
Lubricant		Not required (Non-lube)	
Stroke length tolerance		$^{+1.4}_{0}$ mm	
Piston speed		50 to 750 mm/s	
Cushion		Rubber bumper	
Allowable kinetic energy		0.65 J	1.2 J
Non-rotating accuracy		±0.5°	

Symbol

Single acting: Spring return, Rubber bumper

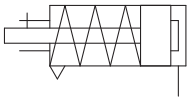

Single acting: Spring extend, Rubber bumper

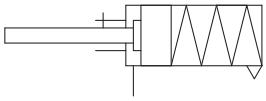

Standard Strokes

Bore size [mm]	Standard stroke [mm]*2	Max. stroke [mm]
32	10, 25, 50, 100, 150, 200, 250*1	200
40		250

*1 Not available for Ø 32.
*2 Other strokes are available on request. (Request based production)

Spring Retracting Force

Spring Return

[N]

Bore size [mm]	Standard stroke [mm]	Spring force													
		10		25		50		100		150		200		250	
		Rod extended	Rod retracted	Rod extended	Rod retracted	Rod extended	Rod retracted	Rod extended	Rod retracted	Rod extended	Rod retracted	Rod extended	Rod retracted	Rod extended	Rod retracted
32	10, 25, 50, 100, 150, 200	53.9	48.8	53.9	41.2	53.9	28.4	66.7	19.6	66.7	18.1	66.7	19.6	—	—
40	10, 25, 50, 100, 150, 200, 250	78.5	72.6	78.5	63.7	78.5	49.0	76.5	23.5	76.5	23.5	76.5	23.5	76.5	23.5

Spring Extend

[N]

Bore size [mm]	Standard stroke [mm]	Spring force													
		10		25		50		100		150		200		250	
		Rod retracted	Rod extended	Rod retracted	Rod extended	Rod retracted	Rod extended	Rod retracted	Rod extended	Rod retracted	Rod extended	Rod retracted	Rod extended	Rod retracted	Rod extended
32	10, 25, 50, 100, 150, 200	66.7	56.3	66.7	40.7	66.7	14.7	66.7	19.6	66.7	18.1	66.7	19.6	—	—
40	10, 25, 50, 100, 150, 200, 250	76.5	65.9	76.5	50.0	76.5	23.5	76.5	23.5	76.5	23.5	76.5	23.5	76.5	23.5

Refer to pages 101 to 111 for cylinders with auto switches.

- Auto Switch Proper Mounting Position (Detection at stroke end) and Mounting Height
- Minimum Stroke for Auto Switch Mounting
- Operating Range
- Auto Switch Mounting Brackets/Part No.

Made to Order

(For details, refer to pages 115 to 120.)

Symbol	Specifications
-XA	Change of rod end shape

Option: Ordering Example of Cylinder Assembly

Cylinder model: CD75KE40-50SNV-B-M9BW

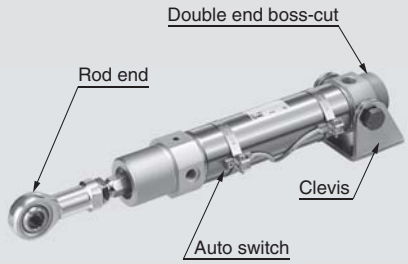

Head cover E: Double end boss-cut
Mounting bracket N: Clevis
Rod end bracket V: Rod end
Auto switch D-M9BW: Band mounting, 2 pcs.

* Mounting bracket, rod end, and auto switch are shipped together with the product.

⚠ Precautions

Be sure to read this before handling the products. Refer to the back cover for safety instructions. For actuator and auto switch precautions, refer to the "Handling Precautions for SMC Products" and the "Operation Manual" on the SMC website: http://www.smc.eu

Mounting Brackets/Accessories

Mounting bracket/Accessory			Standard (mounted to the body)		Mounting bracket (shipped together)						Accessory (shipped together)
			Mounting nut	Rod end nut	Mounting nut	Foot/ Flange	Trunnion pin	Trunnion washer	Clevis pivot bracket	Clevis bolt	Rod end
Mounting bracket symbol	L	Single foot	● (1 pc.)	● (1 pc.)	—	● (1 pc.)	—	—	—	—	—
	M	Double foot	● (1 pc.)	● (1 pc.)	● (1 pc.)	● (2 pcs.)	—	—	—	—	—
	G	Flange	● (1 pc.)	● (1 pc.)	—	● (1 pc.)	—	—	—	—	—
	U	Trunnion	● (1 pc.)	● (1 pc.)	—	—	● (2 pcs.)	● (2 pcs.)	—	—	—
	N	Clevis	● (1 pc.)	● (1 pc.)	—	—	—	● (2 pcs.)	● (1 pc.)	● (2 pcs.)	—
Accessory symbol	V	Rod end	● (1 pc.)	● (1 pc.)	—	—	—	—	—	—	● (1 pc.)

Mounting Bracket/Accessory Part Nos.

Mounting bracket/Accessory		Bore size [mm]		Contents
		32	40	
Mounting bracket	Rod end nut	C75NT32Z	C75NT40Z	1 rod end nut
	Mounting nut	C75SN32Z	C75SN40Z	1 mounting nut
	Flange, Foot (1 pc.)	C75F32AZ	C75F40AZ	1 flange/foot
	Flange, Foot (2 pcs. with 1 mounting nut)	C75F32BZ	C75F40BZ	2 flanges/foots, 1 mounting nut
	Flange, Foot (1 pc. with 1 mounting nut)	C75F32CZ	C75F40CZ	1 flange/foot, 1 mounting nut
	Trunnion	C75T32Z	C75T40Z	2 trunnion pins, 2 trunnion washers
	Clevis	C75C32Z	C75C40Z	1 clevis pivot bracket, 2 clevis bolts, 2 trunnion washers
Accessory	Rod end	KJ10DA	KJ12DA	1 rod end
	Floating joint	JA25-10-150	JA40-12-175	

∗ Refer to page 63 for dimensions of accessories.

Replacement Parts: For Non-rotating Rod Type (K) (Only for single acting, spring extend)

Bore size [mm]	Part no.	Note
32	C75K-32PS	Every set includes: 1 rod seal 1 flat washer 1 retaining ring
40	C75K-40PS	

∗ When replacing the seals, use **grease (GR-S-010: ordered separately)** on the sliding parts.
In the single acting, spring return type, there is no rod seal so it is not possible to replace any seals.

Weights

Single Acting, Spring Return (S)

[kg]

Bore size [mm]				32	40
Basic weight	Without magnet	1 to 50 mm stroke	C75KE□-□S	0.45	0.81
			C75KF□-□S	0.42	0.76
			C75KY□-□S	0.42	0.77
		51 to 100 mm stroke	C75KE□-□S	0.55	0.86
			C75KF□-□S	0.53	0.81
			C75KY□-□S	0.53	0.81
		101 to 150 mm stroke	C75KE□-□S	0.64	0.97
			C75KF□-□S	0.62	0.92
			C75KY□-□S	0.62	0.92
		151 to 200 mm stroke	C75KE□-□S	0.73	1.07
			C75KF□-□S	0.71	1.03
			C75KY□-□S	0.71	1.03
		201 to 250 mm stroke	C75KE□-□S	—	1.27
			C75KF□-□S	—	1.23
			C75KY□-□S	—	1.23
	With magnet	1 to 50 mm stroke	CD75KE□-□S	0.45	0.81
			CD75KF□-□S	0.43	0.77
			CD75KY□-□S	0.43	0.77
		51 to 100 mm stroke	CD75KE□-□S	0.56	0.86
			CD75KF□-□S	0.53	0.82
			CD75KY□-□S	0.53	0.82
		101 to 150 mm stroke	CD75KE□-□S	0.65	0.97
			CD75KF□-□S	0.62	0.93
			CD75KY□-□S	0.62	0.93
		151 to 200 mm stroke	CD75KE□-□S	0.74	1.08
			CD75KF□-□S	0.71	1.03
			CD75KY□-□S	0.72	1.04
		201 to 250 mm stroke	CD75KE□-□S	—	1.28
			CD75KF□-□S	—	1.23
			CD75KY□-□S	—	1.23
Additional weight per 10 mm of stroke				0.02	0.03
Mounting bracket	Flange, Foot (1 pc.)		C75F□AZ	0.11	0.2
	Flange, Foot (2 pcs. with 1 mounting nut)		C75F□BZ	0.25	0.46
	Trunnion		C75T□Z	0.02	0.03
	Clevis		C75C□Z	0.17	0.31
Accessory	Rod end		KJ□DA	0.07	0.11
	Floating joint		JA□-□-□	0.07	0.16

Calculation example: **C75KE32-50SNV**
- Basic weight ····· 0.45 kg (Ø 32)
- Additional weight ··· 0.02 kg (at 10 mm stroke)
- Cylinder stroke ····· 50 mm
- Mounting bracket: Clevis ··· 0.17 kg
- Accessory: Rod end ····· 0.07 kg

0.45 + 0.02 x 50/10 + 0.17 + 0.07 = **0.79 kg**

Single Acting, Spring Extend (T)

[kg]

Bore size [mm]				32	40
Basic weight	Without magnet	1 to 50 mm stroke	C75KE□-□T	0.42	0.76
			C75KF□-□T	0.39	0.72
		51 to 100 mm stroke	C75KE□-□T	0.48	0.85
			C75KF□-□T	0.45	0.8
		101 to 150 mm stroke	C75KE□-□T	0.54	0.93
			C75KF□-□T	0.51	0.89
		151 to 200 mm stroke	C75KE□-□T	0.6	1.01
			C75KF□-□T	0.57	0.97
		201 to 250 mm stroke	C75KE□-□T	—	1.09
			C75KF□-□T	—	1.04
	With magnet	1 to 50 mm stroke	CD75KE□-□T	0.42	0.77
			CD75KF□-□T	0.4	0.73
		51 to 100 mm stroke	CD75KE□-□T	0.48	0.85
			CD75KF□-□T	0.46	0.81
		101 to 150 mm stroke	CD75KE□-□T	0.54	0.94
			CD75KF□-□T	0.52	0.89
		151 to 200 mm stroke	CD75KE□-□T	0.6	1.02
			CD75KF□-□T	0.58	0.98
		201 to 250 mm stroke	CD75KE□-□T	—	1.09
			CD75KF□-□T	—	1.05
Additional weight per 10 mm of stroke				0.02	0.03
Mounting bracket	Flange, Foot (1 pc.)		C75F□AZ	0.11	0.2
	Flange, Foot (2 pcs. with 1 mounting nut)		C75F□BZ	0.25	0.46
	Trunnion		C75T□Z	0.02	0.03
	Clevis		C75C□Z	0.17	0.31
Accessory	Rod end		KJ□DA	0.07	0.11
	Floating joint		JA□-□-□	0.07	0.16

Calculation example: **C75KE32-50TNV**
- Basic weight ····· 0.42 kg (Ø 32)
- Additional weight ··· 0.02 kg (at 10 mm stroke)
- Cylinder stroke ····· 50 mm
- Mounting bracket: Clevis ··· 0.17 kg
- Accessory: Rod end ····· 0.07 kg

0.42 + 0.02 x 50/10 + 0.17 + 0.07 = **0.76 kg**

Dimensions: Single Acting, Spring Return

Double end boss-cut

C□75KE Bore size **–** Stroke **S –** □

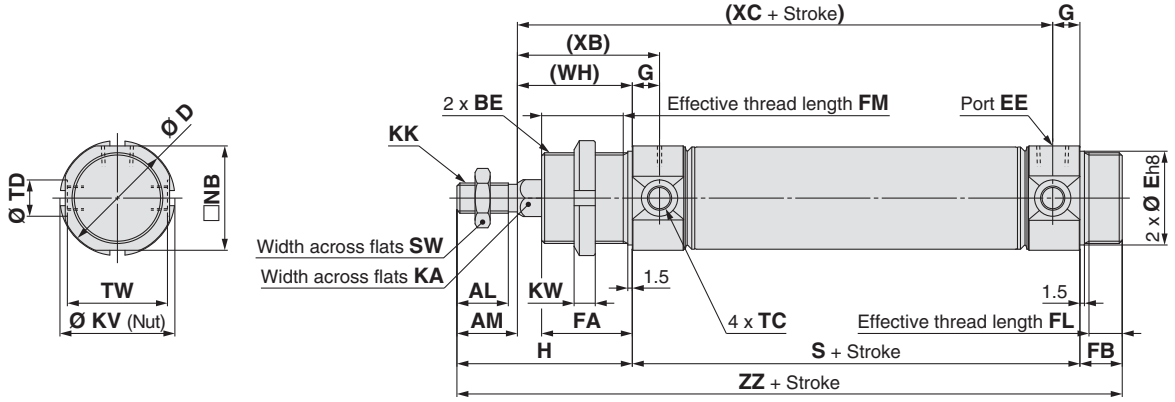

Boss-cut/Basic

C□75KF Bore size **–** Stroke **S –** □

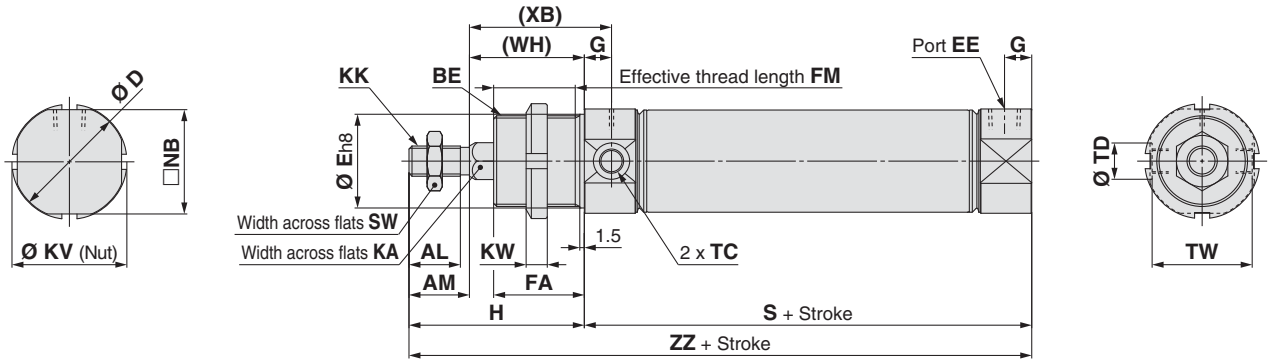

Dimensions

[mm]

Bore size	AL	AM	BE	D	E	EE	FA	FB	FM	FL	G	H	KA	KK	KV	KW	NB	SW	TC	TD	TW	(WH)	(XB)
32	17	20	M30 x 1.5	37.5	30	G1/8	30	14	27	11	9	58	12.2	M10 x 1.5	38	7	34.5	17	M8 x 1	$12^{+0.08}_{0}$	33.1	38	47
40	21	24	M38 x 1.5	46.5	38	G1/4	35	16	32	13	12	69	14.2	M12 x 1.75	50	8	42.5	19	M10 x 1	$14^{+0.08}_{0}$	39.5	45	57

Double End Boss-cut

[mm]

Bore size \ Item / Stroke	S					(XC)					ZZ				
	1 to 50	51 to 100	101 to 150	151 to 200	201 to 250	1 to 50	51 to 100	101 to 150	151 to 200	201 to 250	1 to 50	51 to 100	101 to 150	151 to 200	201 to 250
32	93	118	143	168	—	122	147	172	197	—	165	190	215	240	—
40	114	139	164	189	214	147	172	197	222	247	199	224	249	274	299

Boss-cut/Basic

[mm]

Bore size \ Item / Stroke	S					ZZ				
	1 to 50	51 to 100	101 to 150	151 to 200	201 to 250	1 to 50	51 to 100	101 to 150	151 to 200	201 to 250
32	93	118	143	168	—	151	176	201	226	—
40	114	139	164	189	214	183	208	233	258	283

Refer to page 63 of Standard Type Single Rod for details of accessories (rod end, floating joint).

Dimensions: Single Acting, Spring Return

Head cover axial port

C□75KY Bore size **–** Stroke **S –** □

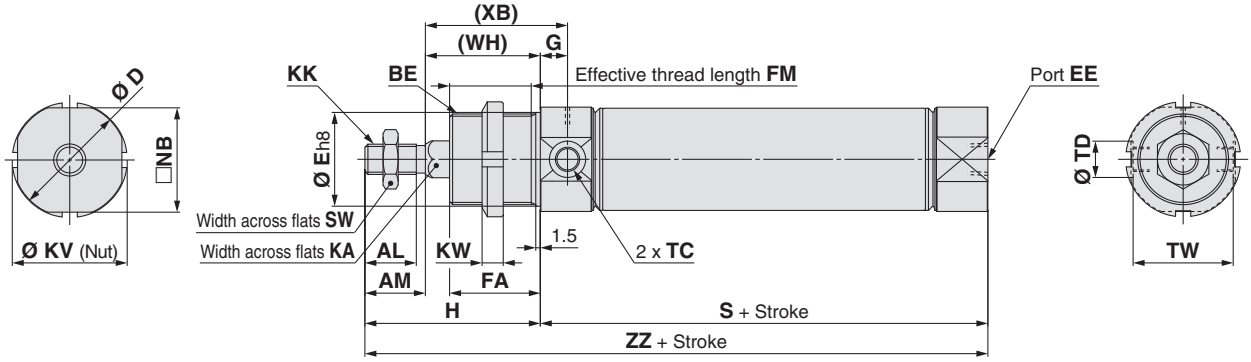

Dimensions

[mm]

Bore size	AL	AM	BE	D	E	EE	FA	FM	G	H	KA	KK	KV	KW	NB	SW	TC	TD	TW	(WH)	(XB)
32	17	20	M30 x 1.5	37.5	30	G1/8	30	27	9	58	12.2	M10 x 1.5	38	7	34.5	17	M8 x 1	$12^{+0.08}_{0}$	33.1	38	47
40	21	24	M38 x 1.5	46.5	38	G1/4	35	32	12	69	14.2	M12 x 1.75	50	8	42.5	19	M10 x 1	$14^{+0.08}_{0}$	39.5	45	57

Bore size	S					ZZ				
	1 to 50	51 to 100	101 to 150	151 to 200	201 to 250	1 to 50	51 to 100	101 to 150	151 to 200	201 to 250
32	93	118	143	168	—	151	176	201	226	—
40	114	139	164	189	214	183	208	233	258	283

Refer to page 63 of Standard Type Single Rod for details of accessories (rod end, floating joint).

Dimensions: Single Acting, Spring Return

Bracket is shipped together with the product.

Single foot: C□75KE□−□SL/Flange: C□75KE□−□SG (With mounting bracket)

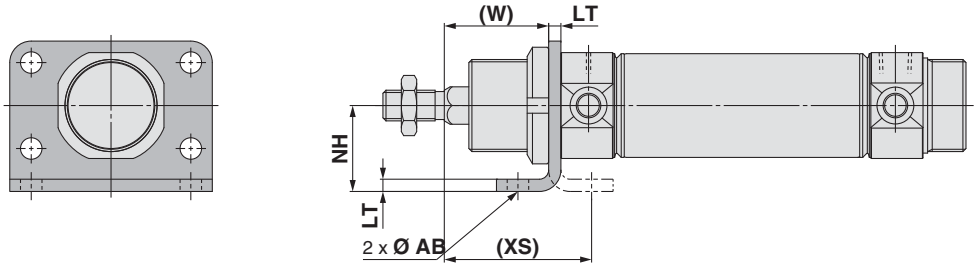

Double foot: C□75KE□−□SM (With mounting bracket)

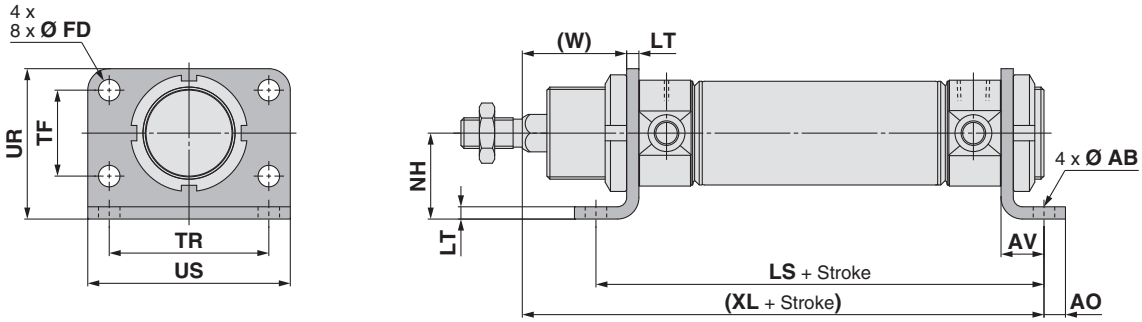

[mm]

Bore size	AB	AO	AV	FD	LS					LT	NH	TF	TR	UR	US	(W)	(XL)					(XS)
					1 to 50	51 to 100	101 to 150	151 to 200	201 to 250								1 to 50	51 to 100	101 to 150	151 to 200	201 to 250	
32	7	7	14	7	121	146	171	196	—	4	28	28	52	49	66	34	145	170	195	220	—	48
40	9	10	20	9	154	179	204	229	254	5	33	30	60	58	80	40	179	204	229	254	279	60

Rod trunnion: C□75KE□−□SU (With mounting bracket)

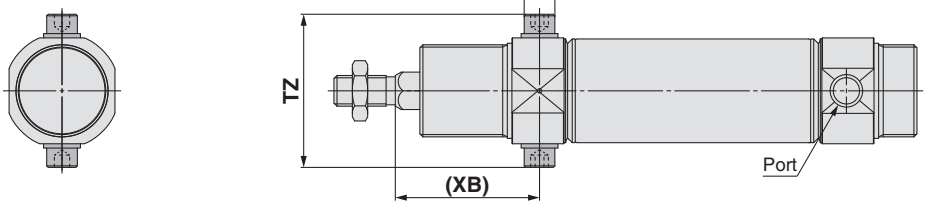

Head trunnion: C□75KE□−□SU (With mounting bracket)

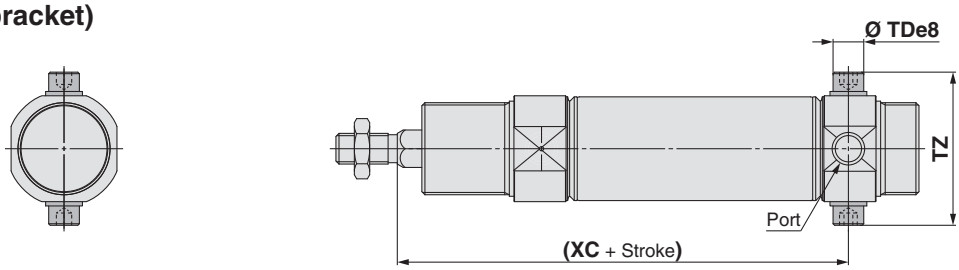

[mm]

Bore size	TDe8	TZ	(XB)	(XC)				
				1 to 50	51 to 100	101 to 150	151 to 200	201 to 250
32	$10^{-0.025}_{-0.047}$	49.9	47	122	147	172	197	—
40	$12^{-0.032}_{-0.059}$	62.3	57	147	172	197	222	247

Refer to page 63 of Standard Type Single Rod for details of accessories (rod end, floating joint).

Dimensions: Single Acting, Spring Return

Bracket is shipped together with the product.

Rod clevis: C□75KE□−□SN
(With mounting bracket)

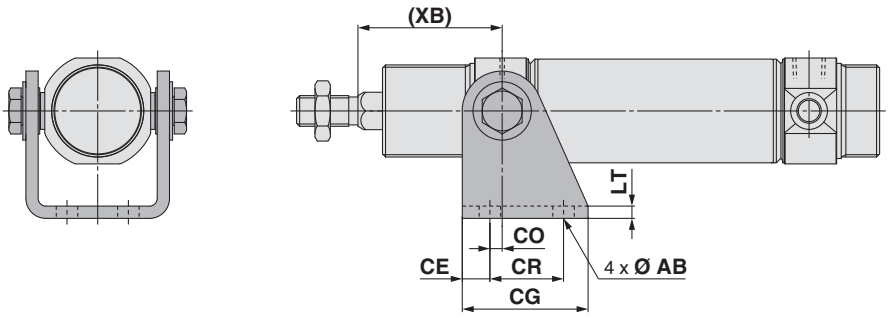

Head clevis: C□75KE□−□SN
(With mounting bracket)

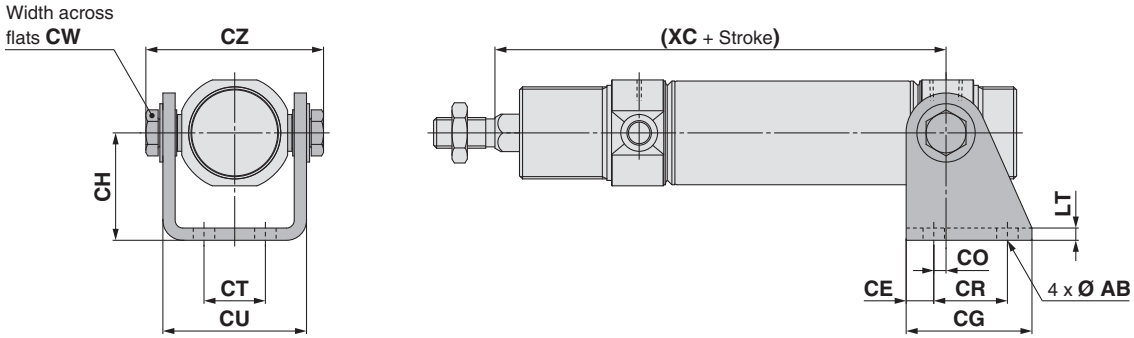

[mm]

Bore size	AB	CE	CG	CH	CO	CR	CT	CU	CW	CZ	LT	(XB)	(XC)				
													1 to 50	51 to 100	101 to 150	151 to 200	201 to 250
32	7	9	41	35	4	24	20	46.8	13	57.9	4	47	122	147	172	197	—
40	9	12	52	40	3	30	28	58.2	17	72.3	5	57	147	172	197	222	247

Refer to page 63 of Standard Type Single Rod for details of accessories (rod end, floating joint).

Dimensions: Single Acting, Spring Extend

Double end boss-cut

C□75KE Bore size – Stroke **T** – □

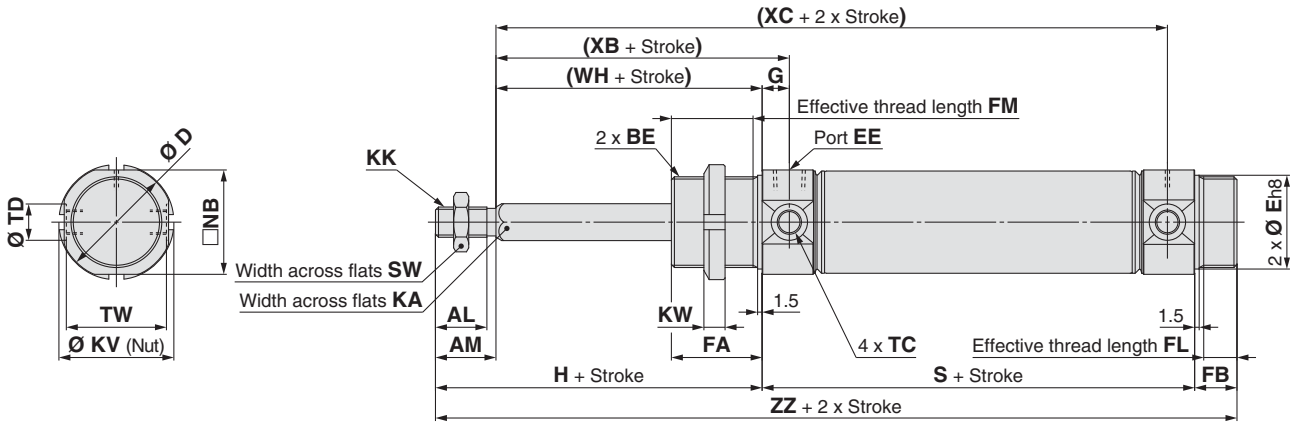

Boss-cut/Basic

C□75KF Bore size – Stroke **T** – □

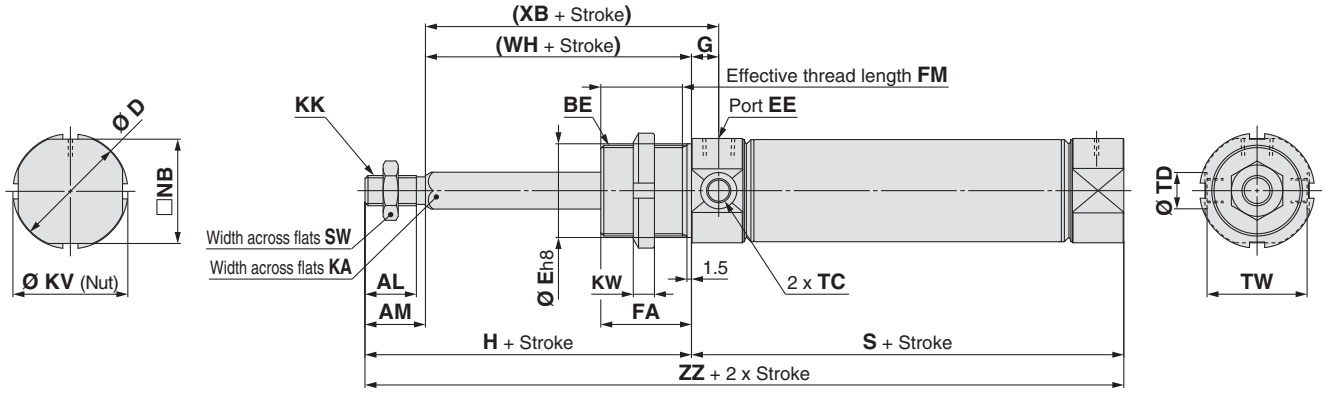

Dimensions

[mm]

Bore size	AL	AM	BE	D	E	EE	FA	FB	FM	FL	G	H	KA	KK	KV	KW	NB	SW	TC	TD	TW	(WH)	(XB)
32	17	20	M30 x 1.5	37.5	30	G1/8	30	14	27	11	9	58	12.2	M10 x 1.5	38	7	34.5	17	M8 x 1	$12^{+0.08}_{0}$	33.1	38	47
40	21	24	M38 x 1.5	46.5	38	G1/4	35	16	32	13	12	69	14.2	M12 x 1.75	50	8	42.5	19	M10 x 1	$14^{+0.08}_{0}$	39.5	45	57

Double End Boss-cut

[mm]

Bore size \ Stroke \ Item	S					(XC)					ZZ				
	1 to 50	51 to 100	101 to 150	151 to 200	201 to 250	1 to 50	51 to 100	101 to 150	151 to 200	201 to 250	1 to 50	51 to 100	101 to 150	151 to 200	201 to 250
32	93	118	143	168	—	122	147	172	197	—	165	190	215	240	—
40	114	139	164	189	214	147	172	197	222	247	199	224	249	274	299

Boss-cut/Basic

[mm]

Bore size \ Stroke \ Item	S					ZZ				
	1 to 50	51 to 100	101 to 150	151 to 200	201 to 250	1 to 50	51 to 100	101 to 150	151 to 200	201 to 250
32	93	118	143	168	—	151	176	201	226	—
40	114	139	164	189	214	183	208	233	258	283

Refer to page 63 of Standard Type Single Rod for details of accessories (rod end, floating joint).

Dimensions: Single Acting, Spring Extend

Bracket is shipped together with the product.

Single foot: C□75KE□−□TL/Flange: C□75KE□−□TG (With mounting bracket)

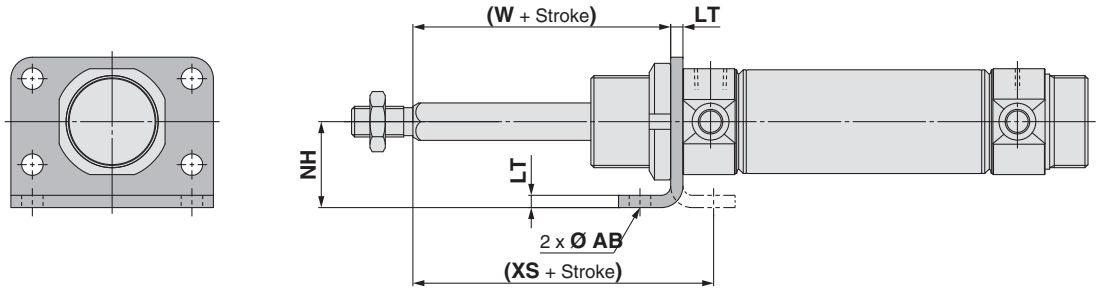

Double foot: C□75KE□−□TM (With mounting bracket)

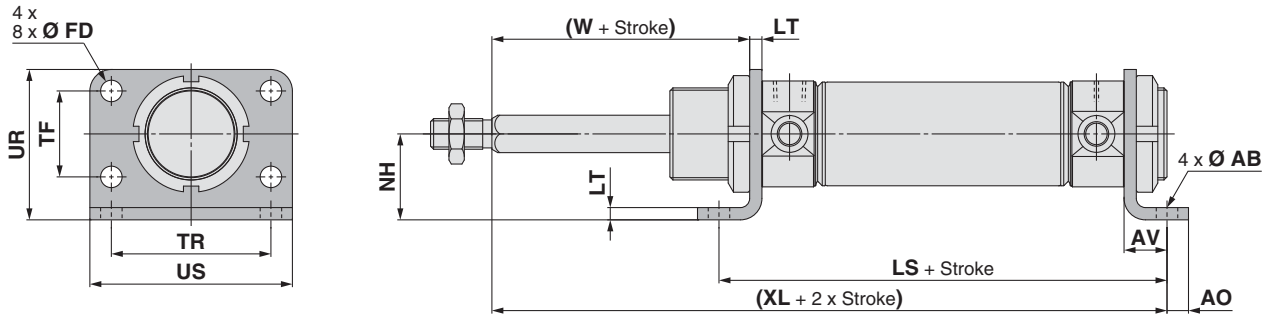

[mm]

Bore size	AB	AO	AV	FD	LS					LT	NH	TF	TR	UR	US	(W)	(XL)					(XS)
					1 to 50	51 to 100	101 to 150	151 to 200	201 to 250								1 to 50	51 to 100	101 to 150	151 to 200	201 to 250	
32	7	7	14	7	121	146	171	196	—	4	28	28	52	49	66	34	145	170	195	220	—	48
40	9	10	20	9	154	179	204	229	254	5	33	30	60	58	80	40	179	204	229	254	279	60

Rod trunnion: C□75KE□−□TU (With mounting bracket)

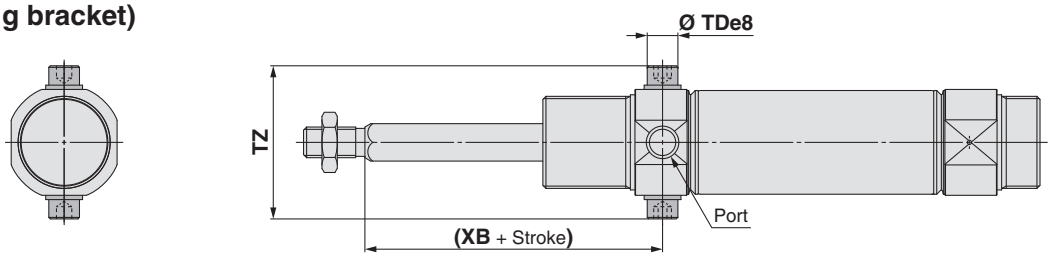

Head trunnion: C□75KE□−□TU (With mounting bracket)

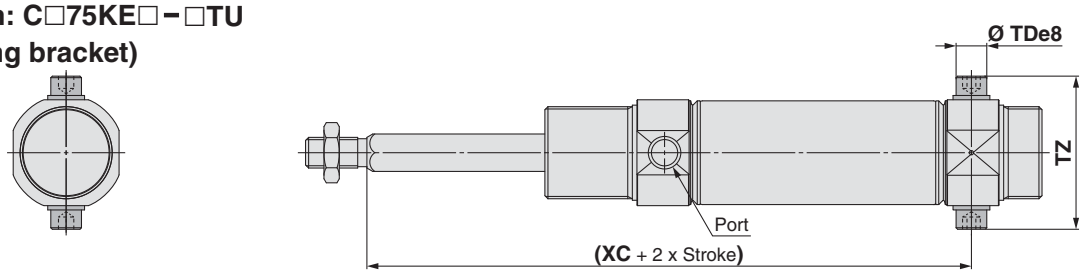

[mm]

Bore size	TDe8	TZ	(XB)	(XC)				
				1 to 50	51 to 100	101 to 150	151 to 200	201 to 250
32	$10^{-0.025}_{-0.047}$	49.9	47	122	147	172	197	—
40	$12^{-0.032}_{-0.059}$	62.3	57	147	172	197	222	247

Refer to page 63 of Standard Type Single Rod for details of accessories (rod end, floating joint).

Dimensions: Single Acting, Spring Extend

Bracket is shipped together with the product.

Rod clevis: C□75KE□−□TN
(With mounting bracket)

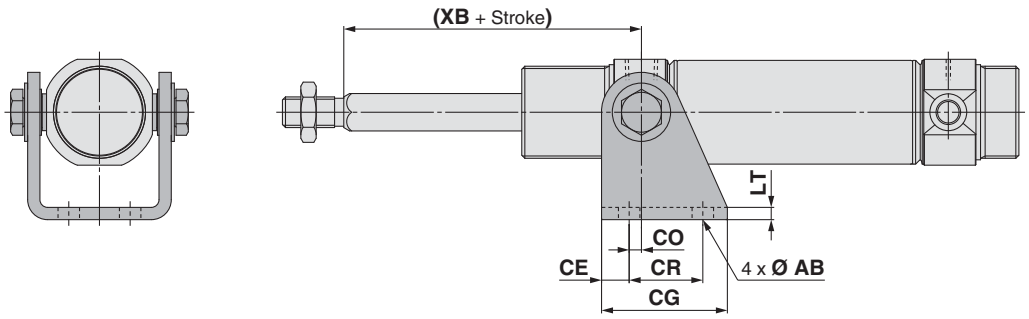

Head clevis: C□75KE□−□TN
(With mounting bracket)

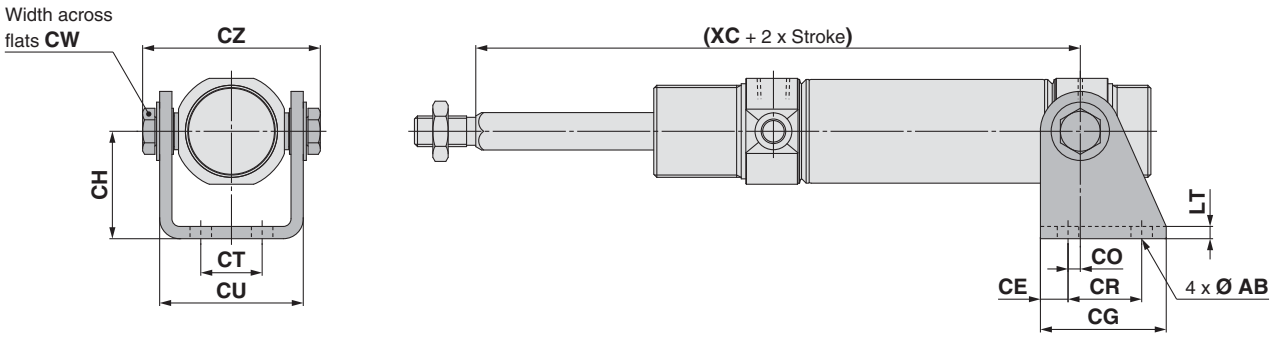

[mm]

Bore size	AB	CE	CG	CH	CO	CR	CT	CU	CW	CZ	LT	(XB)	(XC) 1 to 50	(XC) 51 to 100	(XC) 101 to 150	(XC) 151 to 200	(XC) 201 to 250
32	7	9	41	35	4	24	20	46.8	13	57.9	4	47	122	147	172	197	—
40	9	12	52	40	3	30	28	58.2	17	72.3	5	57	147	172	197	222	247

Refer to page 63 of Standard Type Single Rod for details of accessories (rod end, floating joint).

Air Cylinder: Direct Mount
Double Acting, Single Rod
C75R Series
Ø 32, Ø 40

RoHS

How to Order

Double acting, Single rod C D 75R A F 32 – 100 V – B – M9BW □ – □

Built-in magnet

—	None
D	Built-in magnet

Type

A	Bottom side mounting
B	Front side mounting

Head cover type

F	Boss-cut/Basic
Y	Head cover axial port

Bore size

32	32 mm
40	40 mm

Cylinder stroke [mm]
Refer to the next page for standard strokes.

Accessory∗1

—	None
V	Rod end

∗1 Refer to Mounting Brackets/Accessories on page 99 for details of accessories.
∗ Accessory is shipped together with the product.

Auto switch mounting type∗1

B	Band mounting

∗1 The symbol is "—" for no magnet.

Auto switch

—	Without auto switch

∗ For applicable auto switches, refer to the table below.
∗ Auto switches are shipped together with the product.

Number of auto switches

—	2
S	1
n	n

Made to order
For details, refer to page 98.

Applicable Auto Switches/Refer to the **Auto Switch** Guide for further information.

Type	Special function	Electrical entry	Indicator light	Wiring (Output)	Load voltage DC	Load voltage AC	Auto switch model: Band mounting Perpendicular	Auto switch model: Band mounting In-line	Lead wire length [m] 0.5 (—)	1 (M)	3 (L)	5 (Z)	None (N)	Pre-wired connector	Applicable load	
Solid state auto switch	—	Grommet	Yes	3-wire (NPN)	24 V	5 V, 12 V	—	M9NV	M9N	●	●	●	○	—	○	IC circuit	Relay, PLC
				3-wire (PNP)				M9PV	M9P	●	●	●	○	—	○		
				2-wire		12 V		M9BV	M9B	●	●	●	○	—	○	—	
		Connector						—	H7C	●	—	●	●	●	—		
	Diagnostic indication (2-colour indicator)	Grommet		3-wire (NPN)		5 V, 12 V		M9NWV	M9NW	●	●	●	○	—	○	IC circuit	
				3-wire (PNP)				M9PWV	M9PW	●	●	●	○	—	○		
				2-wire		12 V		M9BWV	M9BW	●	●	●	○	—	○	—	
	Water resistant (2-colour indicator)			3-wire (NPN)		5 V, 12 V		M9NAV∗1	M9NA∗1	○	○	●	○	—	○	IC circuit	
				3-wire (PNP)				M9PAV∗1	M9PA∗1	○	○	●	○	—	○		
				2-wire		12 V		M9BAV∗1	M9BA∗1	○	○	●	○	—	○	—	
	With diagnostic output (2-colour indicator)			4-wire (NPN)		5 V, 12 V		—	H7NF	●	—	●	○	—	○	IC circuit	
Reed auto switch	—	Grommet	Yes	3-wire (NPN equivalent)	—	5 V	—	A96V	A96	●	—	●	—	—	—	IC circuit	—
				2-wire		—	200 V	—	—	●	—	●	—	—	—	—	Relay, PLC
					24 V	12 V	100 V	A93V∗2	A93	●	●	●	●	—	—		
			No				100 V or less	A90V	A90	●	—	●	—	—	—	IC circuit	
			Yes				—	—	C73C	●	—	●	●	●	—	—	
		Connector	No				24 V or less	—	C80C	●	—	●	●	●	—	IC circuit	
	Diagnostic indication (2-colour indicator)	Grommet	Yes			—	—	—	—	●	—	●	—	—	—	—	

∗1 Water resistant type auto switches can be mounted on the above models, but SMC cannot guarantee water resistance. Please contact SMC regarding water resistant types with the above model numbers.
∗2 1 m lead wire is only applicable to the D-A93.
∗ Lead wire length symbols: 0.5 m····· — (Example) M9NW
1 m····· M (Example) M9NWM
3 m····· L (Example) M9NWL
5 m····· Z (Example) M9NWZ
None····· N (Example) H7CN

∗ Since there are other applicable auto switches than listed above, refer to page 111 for details.
∗ Solid state auto switches marked with "○" are produced upon receipt of order.
∗ D-A9□/M9□/A7□/A80□F7□/J7□ auto switches are shipped together, but not assembled. (For band mounting, only the auto switch mounting brackets are assembled before shipment.)

Square rod cover makes direct mounting possible

Space saving

Because it is a directly mounted type without using brackets, its overall length is shorter, and its installation pitch can be made smaller. Thus, the space that is required for installation has been dramatically reduced.

2 mounting types

Front side mounting and bottom side mounting available to suit your applications.

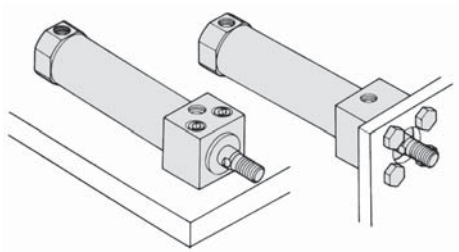

Bottom side mounting **Front side mounting**

Symbol

Double acting, Single rod

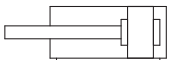

Refer to pages 101 to 111 for cylinders with auto switches.

- Auto Switch Proper Mounting Position (Detection at stroke end) and Mounting Height
- Minimum Stroke for Auto Switch Mounting
- Operating Range
- Auto Switch Mounting Brackets/Part No.

Made to Order

Made to Order

(For details, refer to pages 115 to 120.)

Symbol	Specifications
-XA	Change of rod end shape
-XB6	Heat resistant cylinder (-10 to 150 °C)
-XB7	Cold resistant cylinder (-40 to 70 °C)
-XB9	Low speed cylinder (10 to 50 mm/s)
-XC6A	Made of stainless steel

Specifications

Bore size [mm]	32	40
Type	Pneumatic	
Action	Double acting, Single rod	
Fluid	Air	
Proof pressure	1.5 MPa	
Max. operating pressure	1.0 MPa	
Min. operating pressure	0.05 MPa	
Ambient and fluid temperature	Without auto switch: -20 °C to 80 °C (No freezing)	
	With auto switch: -10 °C to 60 °C (No freezing)	
Lubricant	Not required (Non-lube)	
Stroke length tolerance	$^{+1.4}_{0}$ mm	
Piston speed	50 to 1500 mm/s	
Cushion	Rubber bumper	
Allowable kinetic energy	0.65 J	1.2 J

Standard Strokes

Bore size [mm]	Standard stroke [mm]*1	Max. stroke*2 [mm]
32	10, 25, 40, 50, 80, 100, 125, 160, 200	300
40	10, 25, 40, 50, 80, 100, 125, 160, 200, 250, 300	

*1 Other strokes are available on request.
*2 For exceeding the standard stroke range, it will be available as a special order (-X2018).

Option: Ordering Example of Cylinder Assembly

Cylinder model: CD75RAF40-50V-B-M9BW

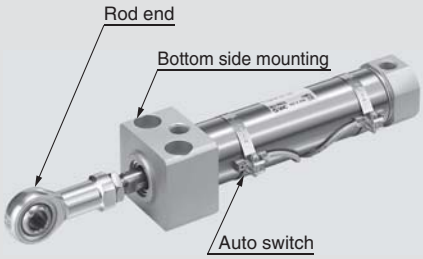

Mounting A: Bottom side mounting
Rod end bracket V: Rod end
Auto switch D-M9BW: Band mounting, 2 pcs.

* Rod end and auto switch are shipped together with the product.

⚠ Precautions

Be sure to read this before handling the products. Refer to the back cover for safety instructions. For actuator and auto switch precautions, refer to the "Handling Precautions for SMC Products" and the "Operation Manual" on the SMC website: http://www.smc.eu

Mounting Brackets/Accessories

Mounting bracket/Accessory			Standard (mounted to the body)	Accessory (shipped together)
			Rod end nut	Rod end
Accessory symbol	V	Rod end	● (1 pc.)	● (1 pc.)

Mounting Bracket/Accessory Part Nos.

Description		Bore size [mm]		Contents
		32	40	
Accessory	Rod end	KJ10DA	KJ12DA	1 rod end
	Floating joint	JA25-10-150	JA40-12-175	

∗ Refer to page 63 for dimensions of accessories.

Replacement Parts

Bore size [mm]	Part no.	Note
32	C75A-32PS	Every set includes: 1 rod seal 1 flat washer 1 retaining ring
40	C75A-40PS	

∗ When replacing the seals, use **grease (GR-S-010: ordered separately)** on the sliding parts.

Weights

[kg]

Bore size [mm]			32	40
Basic weight	Without magnet	C75RAF	0.35	0.69
		C75RAY	0.35	0.69
		C75RBF	0.35	0.68
		C75RBY	0.35	0.69
	With magnet	CD75RAF	0.35	0.69
		CD75RAY	0.36	0.69
		CD75RBF	0.36	0.69
		CD75RBY	0.36	0.69
Additional weight per 10 mm of stroke			0.02	0.03
Accessory	Rod end	KJ□DA	0.07	0.11
	Floating joint	JA□-□-□	0.07	0.16

Calculation example: **C75RAF32-50V**
- Basic weight ····· 0.35 kg (Ø 32)
- Additional weight ··· 0.02 kg (at 10 mm stroke)
- Cylinder stroke ····· 50 mm
- Accessory: Rod end ····· 0.07 kg

0.35 + 0.02 x 50/10 + 0.07 = **0.52 kg**

Dimensions

Bottom side mounting: C□75RAF/Y Bore size – Stroke – B

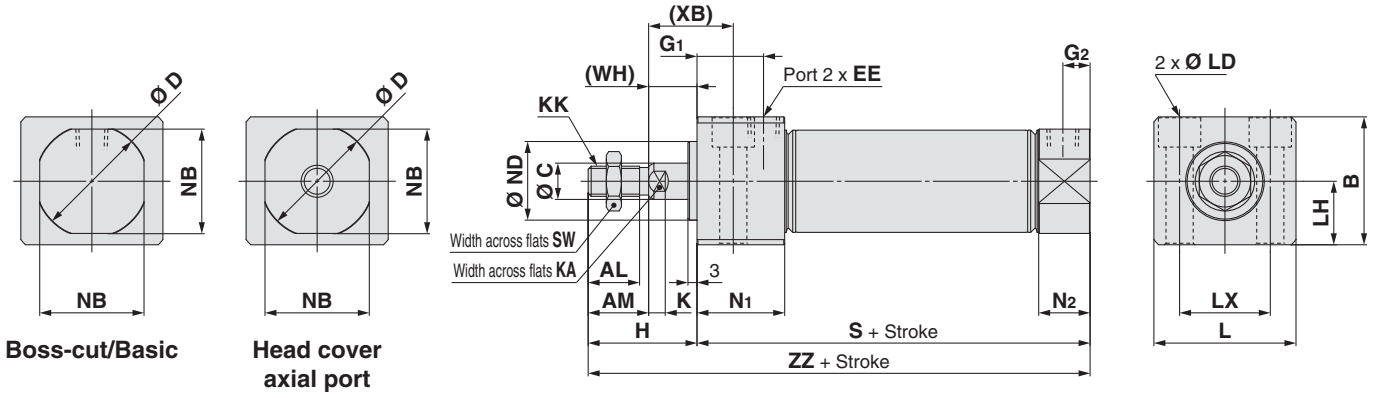

Dimensions [mm]

Bore size	AL	AM	B	C	D	EE	G_1	G_2	H	K	KA	KK	L	LD	LH
32	17	20	42.3	12	37.5	G1/8	22	9	36	5.5	10	M10 x 1.5	47	Ø 9, Ø 14 counterbore depth 10	21
40	21	24	52.3	14	46.5	G1/4	27	12	40	7	12	M12 x 1.75	58.5	Ø 11, Ø 17.5 counterbore depth 12.5	26

Bore size	LX	N_1	N_2	NB	ND	S	SW	(WH)	(XB)	ZZ
32	30	29	17	34.5	$26^{0}_{-0.033}$	80	17	16	28	116
40	38	38	22	42.5	$32^{0}_{-0.039}$	105	19	16	31	145

Front side mounting: C□75RBF/Y Bore size – Stroke – B

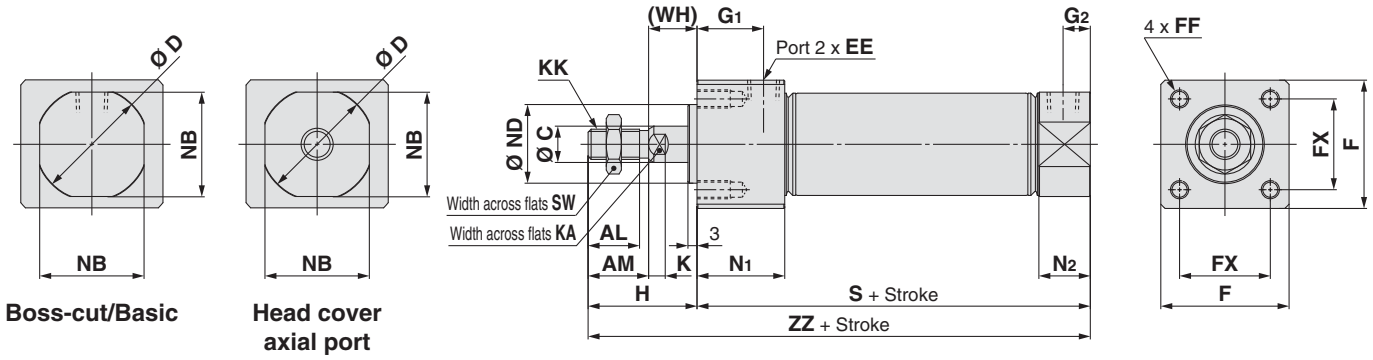

Dimensions [mm]

Bore size	AL	AM	C	D	EE	F	FF	FX	G_1	G_2	H	K	KA	KK	N_1	N_2	NB	ND	S	SW	(WH)	ZZ
32	17	20	12	37.5	G1/8	42.4	M6 x 1 depth 11	30	22	9	36	5.5	10	M10 x 1.5	29	17	34.5	$26^{0}_{-0.033}$	80	17	16	116
40	21	24	14	46.5	G1/4	52.4	M8 x 1.25 depth 14	36	27	12	40	7	12	M12 x 1.75	38	22	42.5	$32^{0}_{-0.039}$	105	19	16	145

Refer to page 63 of Standard Type Single Rod for details of accessories (rod end, floating joint).

Auto Switch Mounting

Auto Switch Proper Mounting Position (Detection at stroke end) and Mounting Height

Applicable series: CD85□

Double acting/Single acting: Band mounting

D-M9□
D-M9□W
D-M9□A
D-A9□

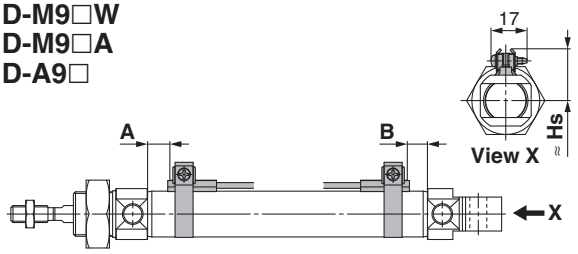

D-M9□V
D-M9□WV
D-M9□AV
D-A9□V

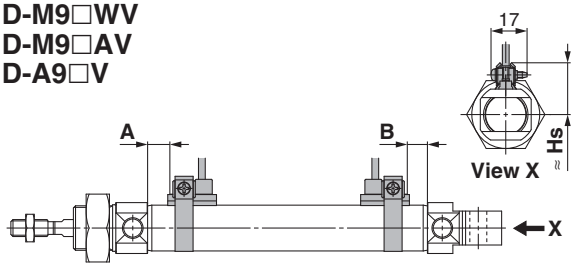

D-H7□
D-H7□W
D-H7BA
D-H7NF
D-C7□
D-C80

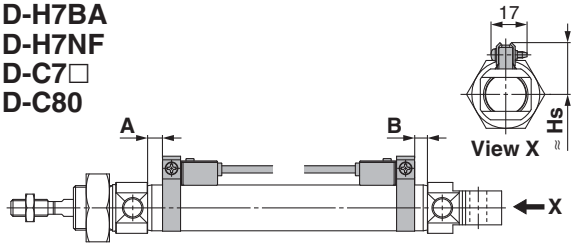

D-H7C

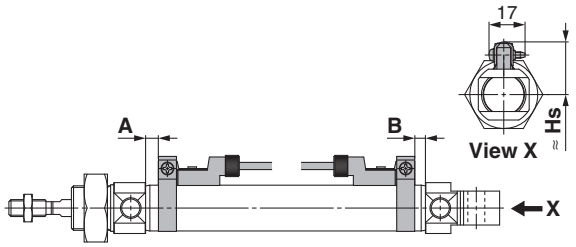

D-C73C
D-C80C

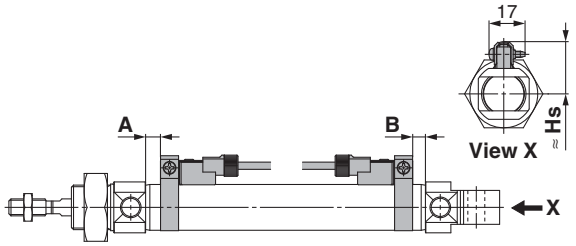

Double acting/Single acting: Rail mounting

D-M9□
D-M9□W
D-M9□A
D-A9□

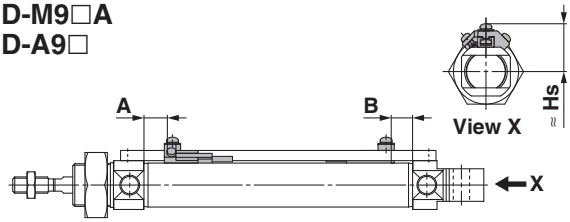

D-M9□V
D-M9□WV
D-M9□AV
D-A9□V

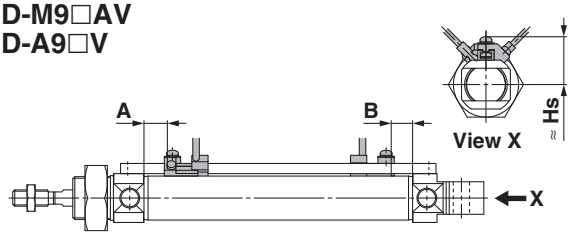

D-F7□ **D-F7BA**
D-F7□W **D-F79F**
D-J79 **D-A7□H**
D-J79W **D-A80H**

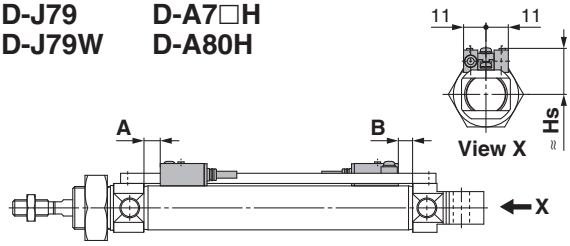

D-F7□V
D-F7□WV
D-F7BAV
D-A7□
D-A80
D-A79W

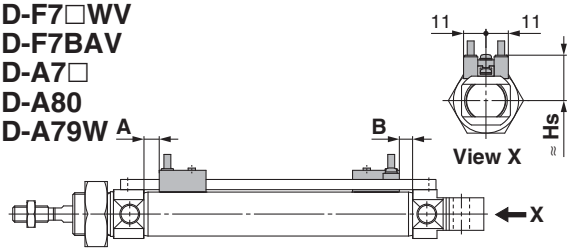

D-J79C
D-A73C
D-A80C

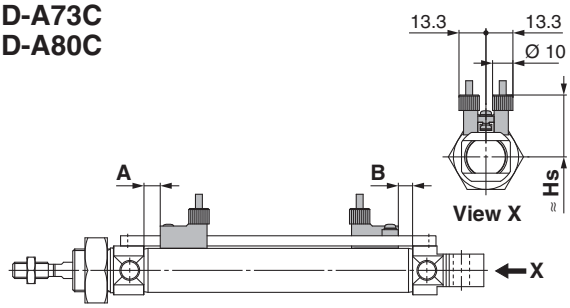

Auto Switch Proper Mounting Position (Detection at stroke end) and Mounting Height

Applicable series: CD75□

Double acting/Single acting: Band mounting

D-M9□
D-M9□W
D-M9□A
D-A9□

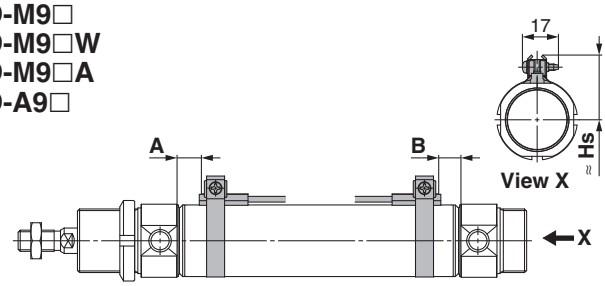

D-M9□V
D-M9□WV
D-M9□AV
D-A9□V

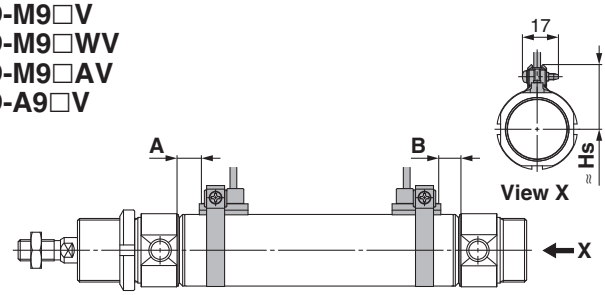

D-H7□
D-H7□W
D-H7BA
D-H7NF
D-C7□
D-C80

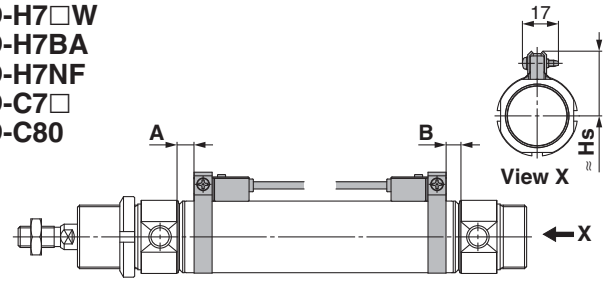

D-H7C

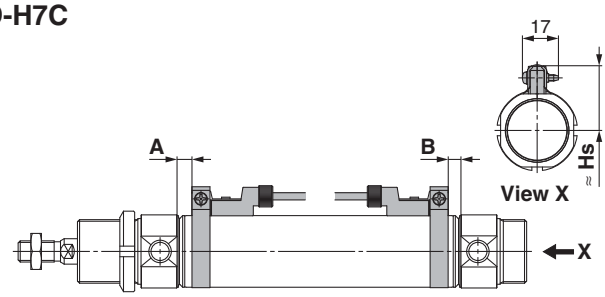

D-C73C
D-C80C

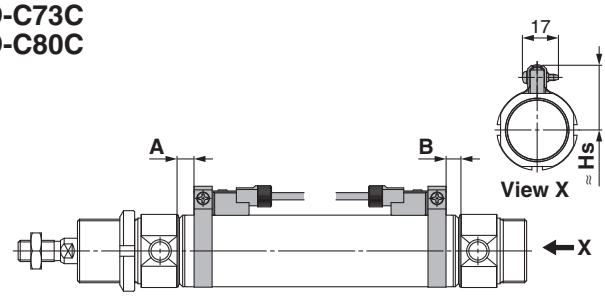

Double acting/Single acting: Rail mounting

D-M9□
D-M9□W
D-M9□A
D-A9□

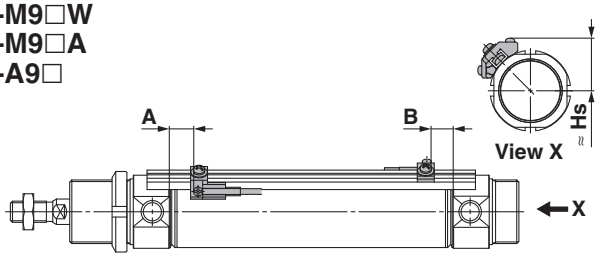

D-M9□V
D-M9□WV
D-M9□AV
D-A9□V

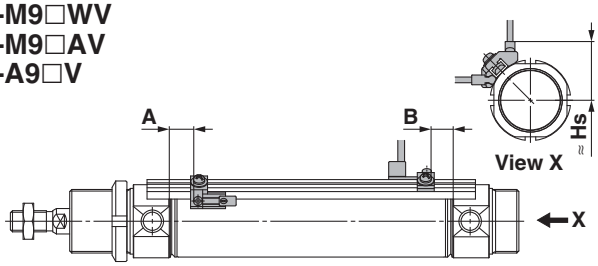

D-F7□ **D-F7BA**
D-F7□W **D-F79F**
D-J79 **D-A7□H**
D-J79W **D-A80H**

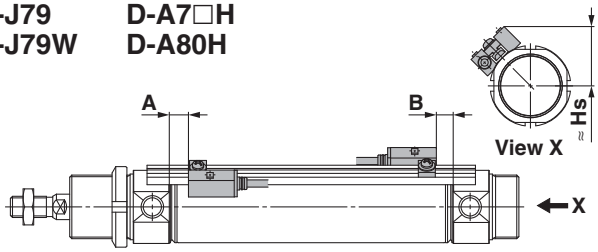

D-F7□V
D-F7□WV
D-F7BAV
D-A7□
D-A80
D-A79W

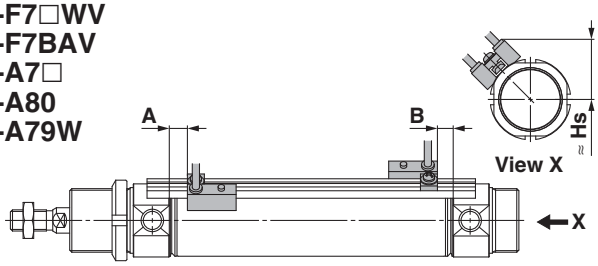

D-J79C
D-A73C
D-A80C

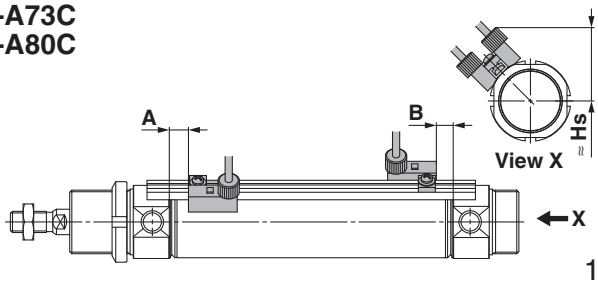

Auto Switch Proper Mounting Position (Detection at stroke end) and Mounting Height

Applicable series: CD85 (Double acting, Single rod), CD85W (Double acting, Double rod), CD85K (Non-rotating rod), CD85R (Direct mount)

Auto Switch Proper Mounting Position [mm]

Auto switch model / Bore size	Band mounting							
	D-M9□ D-M9□V D-M9□W D-M9□WV D-M9□A D-M9□AV		D-A9□ D-A9□V		D-H7□ D-H7C D-H7□W D-H7BA D-H7NF		D-C7□ D-C80 D-C73C D-C80C	
	A	B	A	B	A	B	A	B
8	6.5	6.5	—	—	2	2	3	3
10	6.5 (7)	6.5 (7)	—	—	2 (2.5)	2 (2.5)	3 (3.5)	3 (3.5)
12	7.5 (8.5)	7.5 (8.5)	—	—	3 (4)	3 (4)	4 (5)	4 (5)
16	7.5 (8.5)	13.5 (10.5) [7.5]	3.5 (4.5)	9.5 (6.5) [3.5]	3 (4)	9 (6) [3]	4 (5)	10 (7) [4]
20	10.5 (8.5)	9.5 (7.5)	6.5 (4.5)	5.5 (3.5)	6 (4)	5 (3)	7 (5)	6 (4)
25	12 (10)	11 (9)	8 (6)	7 (5)	7.5 (5.5)	6.5 (4.5)	8.5 (6.5)	7.5 (5.5)

∗ The value in ( ) is in cases with air cushion.
∗ The value in [ ] is in cases of CD85F16, CD85Y.
∗ D-A9□ type cannot be mounted on bore size Ø 8, Ø 10, or Ø 12 cylinder.
∗ Adjust the auto switch after confirming the operating conditions in the actual setting.

[mm]

Auto switch model / Bore size	Rail mounting									
	D-M9□ D-M9□V D-M9□W D-M9□WV D-M9□A D-M9□AV		D-A9□ D-A9□V		D-F7□/J79 D-F7□W/J79W D-F7□V D-F7□WV D-F79F/J79C D-F7BA D-F7BAV D-A72/A7□H D-A80H D-A73C/A80C		D-A73 D-A80		D-A79W	
	A	B	A	B	A	B	A	B	A	B
8	5	5	—	—	4	4	3.5	3.5	—	—
10	5 (5.5)	5 (5.5)	—	—	4 (4.5)	4 (4.5)	3.5 (4)	3.5 (4)	—	—
12	6 (7)	6 (7)	—	—	5 (6)	5 (6)	4.5 (5.5)	4.5 (5.5)	—	—
16	6 (7)	12 (9) [6]	3.5 (4.5)	9.5 (6.5) [3.5]	5 (6)	11 (8) [5]	4.5 (5.5)	10.5 (7.5) [4.5]	2 (3)	8 (5) [2]
20	—	—	6.5 (4.5)	5.5 (3.5)	8 (6)	7 (5)	7.5 (5.5)	6.5 (4.5)	5 (3)	4 (2)
25	—	—	8 (6)	7 (5)	9.5 (7.5)	8.5 (6.5)	9 (7)	8 (6)	6.5 (4.5)	5.5 (3.5)

∗ The value in ( ) is in cases with air cushion.
∗ The value in [ ] is in cases of CD85F16, CD85Y.
∗ D-A9□(V) and A79W types cannot be mounted on bore size Ø 8, Ø 10, or Ø 12 cylinder.
∗ D-M9□(V), M9□W(V), and M9□A(V) types cannot be mounted on bore size Ø 20 or Ø 25 cylinder.
∗ No rail mounting is available with CD85R (direct mount type).
∗ Adjust the auto switch after confirming the operating conditions in the actual setting.

Auto Switch Mounting Height [mm]

Auto switch model / Bore size	Band mounting				
	D-M9□ D-M9□W D-M9□A D-A9□∗1	D-M9□V D-M9□WV D-M9□AV D-A9□V∗1	D-H7□ D-H7□W D-H7BA D-H7NF D-C7□ D-C80	D-H7C	D-C73C D-C80C
	Hs	Hs	Hs	Hs	Hs
8	16	16.5	17	19	18.5
10	17.5	18	18	20	19.5
12	18.5	19	19	21	20.5
16	20.5	21	21	23	22.5
20	24.5	24.5	24.5	25.5	25
25	27	27	27	27.5	27

∗1 D-A9□(V) type cannot be mounted on bore size Ø 8, Ø 10, or Ø 12 cylinder.

[mm]

Auto switch model / Bore size	Rail mounting						
	D-M9□∗1 D-M9□V D-M9□W D-M9□WV D-M9□A D-M9□AV D-A9□∗2 D-A9□V	D-F7□ D-J79 D-F7□W D-J79W D-F79F D-F7BA D-A7□H D-A80H	D-F7□V D-F7□WV D-F7BAV	D-J79C	D-A7□ D-A80	D-A73C D-A80C	D-A79W∗2
	Hs	Hs	Hs	Hs	Hs	Hs	Hs
8	16	16	19	21	16	22.5	—
10	17	17	20	22	17	23.5	—
12	20.5	20.5	23	25	19.5	26.5	—
16	20.5	20.5	23	25	19.5	26.5	22
20	23.5	23.5	26	29	22.5	29.5	25
25	26.5	26.5	29	32	25.5	32.5	28

∗1 D-M9□(V), M9□W(V), and M9□A(V) types cannot be mounted on bore size Ø 20 or Ø 25 cylinder.
∗2 D-A9□(V) and A79W types cannot be mounted on bore size Ø 8, Ø 10, or Ø 12 cylinder.
∗3 No rail mounting is available with CD85R (direct mount type).

Auto Switch Proper Mounting Position (Detection at stroke end) and Mounting Height

Applicable series: CD75 (Double acting, Single rod), CD75W (Double acting, Double rod), CD75K (Non-rotating rod), CD75R (Direct mount)

Auto Switch Proper Mounting Position

[mm]

Auto switch model / Bore size	D-M9□ D-M9□V D-M9□W D-M9□WV D-M9□A D-M9□AV		D-A9□ D-A9□V		D-C7□ D-C80 D-C73C D-C80C		D-A73 D-A80		D-A7□H/A80H/A72 D-A73C/A80C D-F7□/J79 D-F7□W/J79W D-J79C/F7BAL D-F79F		D-H7□ D-H7C D-H7□W D-H7BAL D-H7NF		D-A79W	
	A	B	A	B	A	B	A	B	A	B	A	B	A	B
32	11.5	10.5	7.5	6.5	8 (6)	7 (5)	8.5 (6.5)	7.5 (5.5)	9 (7)	8 (6)	7 (5)	6 (4)	6 (4)	5 (3)
40	17.5	15.5	13.5	11.5	14 (11)	12 (9)	14.5 (11.5)	12.5 (9.5)	15 (12)	13 (10)	13 (10)	11 (8)	12 (9)	10 (7)

∗ The value in ( ) is for air cushion.
∗ The above mentioned value is a guide for auto switch mounting positions for stroke end detection.
Adjust the auto switch after confirming the operating conditions in the actual setting.
∗ A/B dimensions are the distance from the cover to the end surface of the auto switch.

Auto Switch Mounting Height

[mm]

Auto switch model / Bore size	D-M9□ D-M9□V D-M9□W D-M9□WV D-M9□A D-M9□AV D-A9□ D-A9□V	D-C7□/C80 D-H7□ D-H7□W D-H7BAL D-H7NF	D-C73C D-C80C	D-A7□ D-A80	D-A7□H D-A80H	D-F7□/J79 D-F7□W D-J79W D-F7BAL D-F79F	D-A73C D-A80C	D-H7C	D-A79W	D-J79C
	Hs	Hs	Hs	Hs	Hs	Hs	Hs	Hs	Hs	Hs
32	30.5	30.5	31	30	30.5	30	36	31.5	31.5	34.5
40	35.5	35.5	35	34.5	35	34.5	40.5	35.5	36	39

Auto Switch Proper Mounting Position (Detection at stroke end) and Mounting Height

Applicable series: CD85□-□S (Single acting, Spring return)

Auto Switch Proper Mounting Position

[mm]

Auto switch model		Bore size	A dimensions 5 to 50 st	A dimensions 51 to 100 st	A dimensions 101 to 150 st	B
Band mounting	D-M9□ D-M9□V D-M9□W D-M9□WV D-M9□A D-M9□AV	8	18.5	18.5	18.5	6.5
		10	16.5	16.5	16.5	6.5
		12	18	18	18	7.5
		16	18	33.5	49	13.5 [7.5]
		20	10.5 (35.5)	60.5	85.5	9.5
		25	10.5 (35.5)	60.5	85.5	11
	D-A9□	16	14	29.5	45	9.5 [3.5]
		20	6.5 (31.5)	56.5	81.5	5.5
		25	6.5 (31.5)	56.5	81.5	7
	D-H7□ D-H7C D-H7□W D-H7BA D-H7NF	8	14	14	14	2
		10	12	12	12	2
		12	13.5	13.5	13.5	3
		16	13.5	29	44.5	9 [3]
		20	6 (31)	56	81	5
		25	6 (31)	56	81	6.5
	D-C7□ D-C80 D-C73C D-C80C	8	15	15	15	3
		10	13	13	13	3
		12	14.5	14.5	14.5	4
		16	14.5	30	45.5	10 [4]
		20	7 (32)	57	82	6
		25	7 (32)	57	82	7.5

[mm]

Auto switch model		Bore size	A dimensions 5 to 50 st	A dimensions 51 to 100 st	A dimensions 101 to 150 st	B
Rail mounting	D-M9□ D-M9□V D-M9□W D-M9□WV D-M9□A D-M9□AV	8	17	17	17	5
		10	15	15	15	5
		12	16.5	16.5	16.5	6
		16	16.5	32	47.5	12 [6]
	D-A9□ D-A9□V D-A79W	16	12.5	28	43.5	8 [2]
		20	5 (30)	55	80	4
		25	5 (30)	55	80	5.5
	D-F7□/J79 D-F7□W D-J79W D-F7□V D-F7□WV D-F79F/J79C D-F7BA D-F7BAV D-A72 D-A7□H/A80H D-A73C/A80C	8	16	16	16	4
		10	14	14	14	4
		12	15.5	15.5	15.5	5
		16	15.5	31	46.5	11 [5]
		20	8 (33)	58	83	7
		25	8 (33)	58	83	8.5
	D-A73 D-A80	8	15.5	15.5	15.5	3.5
		10	13.5	13.5	13.5	3.5
		12	15	15	15	4.5
		16	15	30.5	46	10.5 [4.5]
		20	7.5 (32.5)	57.5	82.5	6.5
		25	7.5 (32.5)	57.5	82.5	8

∗ The value in ( ) is in cases of non-rotating.
∗ The value in [ ] is in cases of CD85F16, CD85Y.
∗ D-A9□(V) and A79W types cannot be mounted on bore size Ø 8, Ø 10, or Ø 12 cylinder.
∗ When mounting a rail on bore size Ø 20 or Ø 25 cylinder, D-M9□(V), M9□W(V) and M9□A(V) types cannot be mounted.
∗ Adjust the auto switch after confirming the operating conditions in the actual setting.

Auto Switch Mounting Height

[mm]

Bore size \ Auto switch model	Band mounting: D-M9□ D-M9□W D-M9□A D-A9□∗1	D-M9□V D-M9□WV D-M9□AV D-A9□V∗1	D-H7□ D-H7□W D-H7BA D-H7NF D-C7□ D-C80	D-H7C	D-C73C D-C80C
	Hs	Hs	Hs	Hs	Hs
8	16	16.5	17	19	18.5
10	17.5	18	18	20	19.5
12	18.5	19	19	21	21
16	20.5	21	21	23	23
20	24.5	24.5	24.5	25	25
25	27	27	27	27.5	27.5

∗1 D-A9□(V) type cannot be mounted on bore size Ø 8, Ø 10, or Ø 12 cylinder.

[mm]

Bore size \ Auto switch model	Rail mounting: D-M9□∗1 D-M9□V D-M9□W D-M9□WV D-M9□A D-M9□AV D-A9□∗2 D-A9□V	D-F7□ D-J79 D-F7□W D-J79W D-F79F D-F7BA D-A7□H D-A80H	D-F7□V D-F7□WV D-F7BAV	D-J79C	D-A7□ D-A80	D-A73C D-A80C	D-A79W∗2
	Hs	Hs	Hs	Hs	Hs	Hs	Hs
8	16	16	19	21	16	22.5	—
10	17	17	20	22	17	23.5	—
12	20.5	20.5	23	25	19.5	26.5	—
16	20.5	20.5	23	25	19.5	26.5	22
20	23.5	23.5	26	29	22.5	29.5	25
25	26.5	26.5	29	32	25.5	32.5	28

∗1 D-M9□(V), M9□W(V), and M9□A(V) types cannot be mounted on bore size Ø 20 or Ø 25 cylinder.
∗2 D-A9□(V) and A79W types cannot be mounted on bore size Ø 8, Ø 10, or Ø 12 cylinder.

Auto Switch Proper Mounting Position (Detection at stroke end) and Mounting Height

Applicable series: CD75□-□S (Single acting, Spring return)

Auto Switch Proper Mounting Position

[mm]

Auto switch model	Bore size	Single acting, Spring return					
		A dimensions					B
		1 to 50 st	51 to 100 st	101 to 150 st	151 to 200 st	151 to 200 st	
D-M9□ D-M9□V D-M9□W D-M9□WV D-M9□A D-M9□AV	32	11.5 (36.5)	61.5	86.5	111.5	136.5	10.5
	40	16.5 (41.5)	66.5	91.5	116.5	141.5	15.5
D-A9□ D-A9□V	32	7.5 (32.5)	57.5	82.5	107.5	132.5	6.5
	40	12.5 (37.5)	62.5	87.5	112.5	137.5	11.5
D-C7□/C80 D-C73C/C80C	32	8 (33)	58	83	108	—	7
	40	13 (38)	63	88	113	138	12
D-A73 D-A80	32	8.5 (33.5)	58.5	83.5	108.5	—	7.5
	40	13.5 (38.5)	63.5	88.5	113.5	138.5	12.5
D-A72/A7□H/A80H D-A73C/A80C D-F7□/F7□W D-J79/J79W D-F7□WV D-J79C D-F7BAL, D-F79F	32	9 (34)	59	84	109	—	8
	40	14 (39)	64	89	114	139	13
D-A79WL	32	6 (31)	56	81	106	—	5
	40	11 (36)	61	86	111	136	10
D-H7□/H7C/H7□W D-H7BAL, D-H7NF	32	7 (32)	57	82	107	—	6
	40	12 (37)	62	87	112	137	11

∗ The value in ( ) is for air cushion.
∗ The above-mentioned value is a guide for auto switch mounting positions for stroke end detection. Adjust the auto switch after confirming the operating conditions in the actual setting.
∗ A/B dimensions are the distance from the cover to the end surface of the auto switch.

Auto Switch Mounting Height

[mm]

Auto switch model / Bore size	D-M9□ D-M9□V D-M9□W D-M9□WV D-M9□A D-M9□AV D-A9□ D-A9□V	D-C7□/C80 D-H7□ D-H7□W D-H7BAL D-H7NF	D-C73C D-C80C	D-A7□ D-A80	D-A7□H D-A80H	D-F7□/J79 D-F7□W D-J79W D-F7BAL D-F79F	D-A73C D-A80C	D-H7C	D-A79W	D-J79C
	Hs	Hs	Hs	Hs	Hs	Hs	Hs	Hs	Hs	Hs
32	30.5	30.5	31	30	30.5	30	36	31.5	31.5	34.5
40	35.5	35.5	35	34.5	35	34.5	40.5	35.5	36	39

Auto Switch Proper Mounting Position (Detection at stroke end) and Mounting Height

Applicable series: CD85□-□T (Single acting, Spring extend)

Auto Switch Proper Mounting Position

[mm]

Auto switch model		Bore size	A	B dimensions 5 to 50 st	51 to 100 st	101 to 150 st
Band mounting	D-M9□ D-M9□V D-M9□W D-M9□WV D-M9□A D-M9□AV	8	6.5	31	31	31
		10	6.5	29	29	29
		12	7.5	31	31	31
		16	7.5	36 [30]	62 [56]	88 [82]
		20	10.5	34.5	59.5	84.5
		25	12	34.5	59.5	84.5
	D-A9□ D-A9□V	16	3.5	32 [26]	58 [52]	84 [80]
		20	6.5	30.5	55.5	80.5
		25	8	30.5	55.5	80.5
	D-H7□ D-H7C D-H7□W D-H7BA D-H7NF	8	2	26.5	26.5	26.5
		10	2	24.5	24.5	24.5
		12	3	26.5	26.5	26.5
		16	3	31.5 [25.5]	57.5 [51.5]	83.5 [77.5]
		20	6	30	55	80
		25	7.5	30	55	80
	D-C7□ D-C80 D-C73C D-C80C	8	3	27.5	27.5	27.5
		10	3	25.5	25.5	25.5
		12	4	27.5	27.5	27.5
		16	4	32.5 [26.5]	58.5 [52.5]	84.5 [78.5]
		20	7	31	56	81
		25	8.5	31	56	81

[mm]

Auto switch model		Bore size	A	B dimensions 5 to 50 st	51 to 100 st	101 to 150 st
Rail mounting	D-M9□ D-M9□V D-M9□W D-M9□WV D-M9□A D-M9□AV	8	5	29.5	29.5	29.5
		10	5	27.5	27.5	27.5
		12	6	29.5	29.5	29.5
		16	6	34.5 [28.5]	60.5 [54.5]	86.5 [80.5]
	D-A9□ D-A9□V D-A79W	16	2	30.5 [24.5]	56.5 [50.5]	82.5 [76.5]
		20	5	29	54	79
		25	6.5	29	54	79
	D-F7□/J79 D-F7□W D-J79W D-F7□V D-F7□WV D-F79F/J79C D-F7BA D-F7BAV D-A72 D-A7□H/A80H D-A73C/A80C	8	4	28.5	28.5	28.5
		10	4	26.5	26.5	26.5
		12	5	28.5	28.5	28.5
		16	5	33.5 [27.5]	59.5 [53.5]	85.5 [79.5]
		20	8	32	57	82
		25	9.5	32	57	82
	D-A73 D-A80	8	3.5	28	28	28
		10	3.5	26	26	26
		12	4.5	28	28	28
		16	4.5	33 [27]	59 [53]	85 [79]
		20	7.5	31.5	56.5	81.5
		25	9	31.5	56.5	81.5

∗ The value in [ ] is in cases of CD85F16, CD85Y.
∗ D-A9□(V) and A79W types cannot be mounted on bore size Ø 8, Ø 10, or Ø 12 cylinder.
∗ When mounting a rail on bore size Ø 20 or Ø 25 cylinder, D-M9□(V), M9□W(V) and M9□A(V) types cannot be mounted.
∗ Adjust the auto switch after confirming the operating conditions in the actual setting.

Auto Switch Mounting Height

[mm]

Auto switch model / Bore size	Band mounting: D-M9□ D-M9□W D-M9□A D-A9□∗1	D-M9□V D-M9□WV D-M9□AV D-A9□V∗1	D-H7□ D-H7□W D-H7BA D-H7NF D-C7□ D-C80	D-H7C	D-C73C D-C80C
	Hs	Hs	Hs	Hs	Hs
8	16	16.5	17	19	18.5
10	17.5	18	18	20	19.5
12	18.5	19	19	21	20.5
16	20.5	21	21	23	22.5
20	24.5	24.5	24.5	25.5	25
25	27	27	27	27.5	27

∗1 D-A9□(V) type cannot be mounted on bore size Ø 8, Ø 10, or Ø 12 cylinder.

[mm]

Auto switch model / Bore size	Rail mounting: D-M9□∗1 D-M9□V D-M9□W D-M9□WV D-M9□A D-M9□AV D-A9□∗2 D-A9□V	D-F7□ D-J79 D-F7□W D-J79W D-F79F D-F7BA D-A7□H D-A80H	D-F7□V D-F7□WV D-F7BAV	D-J79C	D-A7□ D-A80	D-A73C D-A80C	D-A79W∗2
	Hs	Hs	Hs	Hs	Hs	Hs	Hs
8	16	16	19	21	16	22.5	—
10	17	17	20	22	17	23.5	—
12	20.5	20.5	23	25	19.5	26.5	—
16	20.5	20.5	23	25	19.5	26.5	22
20	23.5	23.5	26	29	22.5	29.5	25
25	26.5	26.5	29	32	25.5	32.5	28

∗1 D-M9□(V), M9□W(V), and M9□A(V) types cannot be mounted on bore size Ø 20 or Ø 25 cylinder.
∗2 D-A9□(V) and A79W types cannot be mounted on bore size Ø 8, Ø 10, or Ø 12 cylinder.

Auto Switch Proper Mounting Position (Detection at stroke end) and Mounting Height

Applicable series: CD75□-□T (Single acting, Spring extend)

Auto Switch Proper Mounting Position

[mm]

Auto switch model	Bore size	Single acting, Spring extend					
		A	B dimensions				
			1 to 50 st	51 to 100 st	101 to 150 st	151 to 200 st	151 to 200 st
D-M9□ D-M9□V D-M9□W D-M9□WV D-M9□A D-M9□AV	32	11.5	35.5	60.5	85.5	110.5	—
	40	16.5	40.5	65.5	90.5	115.5	140.5
D-A9□ D-A9□V	32	7.5	31.5	56.5	81.5	106.5	—
	40	12.5	36.5	61.5	86.5	111.5	136.5
D-C7□/C80 D-C73C/C80C	32	8	32	57	82	107	—
	40	13	37	62	87	112	137
D-A73 D-A80	32	8.5	32.5	57.5	82.5	107.5	—
	40	13.5	37.5	62.5	87.5	112.5	137.5
D-A72/A7□H/A80H D-A73C/A80C D-F7□/F7□W D-J79/J79W D-F7□WV D-J79C D-F7BAL, D-F79F	32	9	33	58	83	108	—
	40	14	38	63	88	113	138
D-A79WL	32	6	30	55	80	105	—
	40	11	35	60	85	110	135
D-H7□/H7C/H7□W D-H7BAL, D-H7NF	32	7	31	56	81	106	—
	40	12	36	61	86	111	136

∗ The value in ( ) is for air cushion.
∗ The above-mentioned value is a guide for auto switch mounting positions for stroke end detection. Adjust the auto switch after confirming the operating conditions in the actual setting.
∗ A/B dimensions are the distance from the cover to the end surface of the auto switch.

Auto Switch Mounting Height

[mm]

Auto switch model / Bore size	D-M9□ D-M9□V D-M9□W D-M9□WV D-M9□A D-M9□AV D-A9□ D-A9□V	D-C7□/C80 D-H7□ D-H7□W D-H7BAL D-H7NF	D-C73C D-C80C	D-A7□ D-A80	D-A7□H D-A80H	D-F7□/J79 D-F7□W D-J79W D-F7BAL D-F79F	D-A73C D-A80C	D-H7C	D-A79W	D-J79C
	Hs	Hs	Hs	Hs	Hs	Hs	Hs	Hs	Hs	Hs
32	30.5	30.5	31	30	30.5	30	36	31.5	31.5	34.5
40	35.5	35.5	35	34.5	35	34.5	40.5	35.5	36	39

Minimum Stroke for Auto Switch Mounting

C85: Ø 8, Ø 10, Ø 12, Ø 16

n: Number of auto switches [mm]

	Auto switch model	Number of auto switches: 1	2: Different surfaces	2: Same surface	n: Ø 8 to Ø 16: Different surfaces	n: Ø 8 to Ø 16: Same surface
Band mounting	D-M9□ D-M9□V D-M9□W D-M9□WV D-M9□A D-M9□AV D-A9□*2 D-A9□V	10	15*1	45*1	$15 + 35\frac{(n-2)}{2}$ (n = 2, 4, 6···)	45 + 15 (n – 2) (n = 2, 4, 6···)
Band mounting	D-C7□ D-C80	10	15	50	$15 + 40\frac{(n-2)}{2}$ (n = 2, 4, 6···)	50 + 20 (n – 2) (n = 2, 4, 6···)
Band mounting	D-H7□ D-H7□W D-H7BA D-H7NF	10	15	60	$15 + 45\frac{(n-2)}{2}$ (n=2, 4, 6···)	60 + 22.5 (n – 2) (n = 2, 4, 6···)
Band mounting	D-H7C D-C73C D-C80C	10	15	65	$15 + 50\frac{(n-2)}{2}$ (n = 2, 4, 6···)	50 + 27.5 (n – 2) (n = 2, 4, 6···)
Rail mounting	D-M9□V D-F7□V D-J79C	5	—	5	—	10 + 10 (n – 2) (n = 4, 6···)
Rail mounting	D-F7□ D-J79	5	—	5	—	15 + 15 (n – 2) (n = 4, 6···)
Rail mounting	D-A9□V*2	5	—	10	—	10 + 15 (n – 2) (n = 4, 6···)
Rail mounting	D-A7□ D-A80 D-A73C D-A80C	5	—	10	—	15 + 10 (n – 2) (n = 4, 6···)
Rail mounting	D-A7□H D-A80H	5	—	10	—	15 + 15 (n – 2) (n = 4, 6···)
Rail mounting	D-M9□ D-A9□*2	10	—	10	—	15 + 15 (n – 2) (n = 4, 6···)
Rail mounting	D-F7□WV D-F7BAV D-A79W*2	10	—	15	—	10 + 15 (n – 2) (n = 4, 6···)
Rail mounting	D-M9□WV D-M9□AV	10	—	15	—	15 + 15 (n – 2) (n = 4, 6···)
Rail mounting	D-F7□W D-J79W D-F7BA	10	—	15	—	15 + 20 (n – 2) (n = 4, 6···)
Rail mounting	D-M9□W	15	—	15	—	15 + 15 (n – 2) (n = 4, 6···)
Rail mounting	D-M9□A	15	—	20	—	20 + 15 (n – 2) (n = 4, 6···)

C85: Ø 20, Ø 25

n: Number of auto switches [mm]

	Auto switch model	Number of auto switches: 1	2: Different surfaces	2: Same surface	n: Ø 20, Ø 25: Different surfaces	n: Ø 20, Ø 25: Same surface
Band mounting	D-M9□ D-M9□V D-M9□W D-M9□WV D-M9□A D-M9□AV D-A9□ D-A9□V	10	15*1	45*1	$15 + 45\frac{(n-2)}{2}$ (n = 2, 4, 6···)	45 + 45 (n – 2) (n = 2, 4, 6···)
Band mounting	D-C7□ D-C80	10	15	50		50 + 45 (n – 2) (n = 2, 4, 6···)
Band mounting	D-H7□ D-H7□W D-H7BA D-H7NF	10	15	60		60 + 45 (n – 2) (n = 2, 4, 6···)
Band mounting	D-H7C D-C73C D-C80C	10	15	65	$15 + 50\frac{(n-2)}{2}$ (n = 2, 4, 6···)	65 + 50 (n – 2) (n = 2, 4, 6···)
Rail mounting	D-F7□V D-J79C	5	—	5	—	10 + 10 (n – 2) (n = 4, 6···)
Rail mounting	D-F7□ D-J79	5	—	5	—	15 + 15 (n – 2) (n = 4, 6···)
Rail mounting	D-A9□ D-A9□V	5	—	10	—	10 + 15 (n – 2) (n = 4, 6···)
Rail mounting	D-A7□ D-A80 D-A73C D-A80C	5	—	10	—	15 + 10 (n – 2) (n = 4, 6···)
Rail mounting	D-A7□H D-A80H	5	—	10	—	15 + 15 (n – 2) (n = 4, 6···)
Rail mounting	D-F7□WV D-F7BAV D-A79W	10	—	15	—	10 + 15 (n – 2) (n = 4, 6···)
Rail mounting	D-F7□W D-J79W D-F7BA	10	—	15	—	15 + 20 (n – 2) (n = 4, 6···)

*1 Auto switch mounting (With the stroke range within the below, an adjustment is required as shown in the chart below).

Auto switch model	With 2 auto switches: Different surfaces*1	With 2 auto switches: Same surface*1
	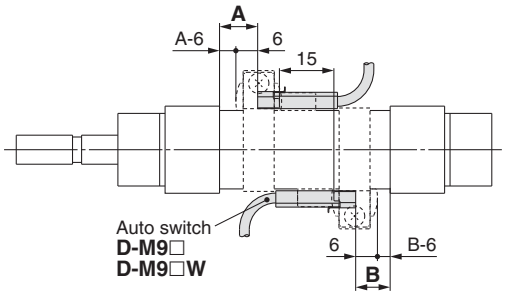 The proper auto switch mounting position is 6 mm inward from the switch holder edge.	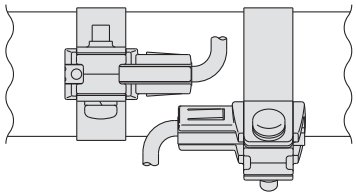 The auto switch is mounted by slightly displacing it in a direction (cylinder tube circumferential exterior) so that the auto switch and lead wire do not interfere with each other.
D-A93	—	45 to less than 50 strokes
D-M9□/M9□W	15 to less than 20 strokes	45 to less than 55 strokes

*2 D-A9□(V) and A79W types cannot be mounted on bore size Ø 8, Ø 10, or Ø 12 cylinder.

* When mounting a rail on bore size Ø 20 or Ø 25 cylinder, D-M9□(V), M9□W(V) and M9□A(V) types cannot be mounted.

Minimum Stroke for Auto Switch Mounting

C75: Ø 32, Ø 40

n: Number of auto switches [mm]

Auto switch model		Number of auto switches				
		1	2		n	
			Different surfaces	Same surface	Ø 32, Ø 40	
					Different surfaces	Same surface
Band mounting	D-C73, D-C80 D-H7A1, D-H7A2 D-H7B	10	15	50	$15 + 45\frac{(n-2)}{2}$ (n = 2, 4···)	50 + 45 (n – 2)
Band mounting	D-C73C D-C80C D-H7C	10	15	65		65 + 50 (n – 2)
Band mounting	D-H7NW D-H7PW D-H7BW	10	15	75		75 + 55 (n – 2)
Rail mounting	D-A73, D-A80 D-A73H, D-A80H D-A73C, D-A80C D-F79, D-J79 D-F7P, D-J79C	5	—	10	—	$15 + 35\frac{(n-2)}{2}$ (n = 2, 4···)
Rail mounting	D-A79W, D-F79W D-F7PW D-J79W	10	—	15	—	

Operating Range

[mm]

Auto switch model		Bore size							
		8	10	12	16	20	25	32	40
Band mounting	D-M9□ D-M9□V D-M9□W D-M9□WV D-M9□A D-M9□AV	2	2.5	2.5	3	3	3	3	3
Band mounting	D-A9□*1 D-A9□V	—	—	—	7	6	6	6	6
Band mounting	D-H7□ D-H7□W D-H7BA D-H7NF	3	3	3	4	4	4	4.5	5
Band mounting	D-H7C	8	8	8	9	7	8.5	9	10
Band mounting	D-C7□/C80 D-C73C/C80C	7	7	7	7	7	8	8	8
Rail mounting	D-M9□/M9□V D-M9□W/M9□WV D-M9□A/M9□AV	2.5	3	3.5	3.5	—	—	—	—
Rail mounting	D-A9□*1 D-A9□V	—	—	—	6.5	5.5	6	—	—
Rail mounting	D-F7□/J79 D-F7□V/J79C D-F7□W/J79W D-F7□WV D-F79F D-F7BA/F7BAV	5	5	6	5	5	6	4.5	4.5
Rail mounting	D-A7□/A80 D-A7□H/A80H D-A73C/A80C	8	8	9	9	7	7	7.5	7.5
Rail mounting	D-A79W*2	—	—	—	13	10	10.5	11.5	11.5

*1 D-A9□(V) and A79W types cannot be mounted on bore size Ø 8, Ø 10, or Ø 12 cylinder.
*2 When mounting a rail on bore size Ø 20 or Ø 25 cylinder, D-M9□(V), M9□W(V) and M9□A(V) types cannot be mounted.
* When mounting a rail on bore size Ø 32 or Ø 40 cylinder, D-M9□(V), M9□W(V), M9□A(V) and A9□(V) types cannot be mounted.
* Values which include hysteresis are for guideline purposes only, they are not a guarantee (assuming approximately ±30% dispersion) and may change substantially depending on the ambient environment.

Auto Switch Mounting Bracket/Set Part Nos.

Auto switch mounting	Auto switch model	C85 Series						C75 Series	
		Bore size [mm]							
		Ø 8	Ø 10	Ø 12	Ø 16	Ø 20	Ø 25	Ø 32	Ø 40
Band mounting ∗1 ∗2 ∗3 ∗4	**D-M9□(V)** **D-M9□W(V)** **D-A9□(V)**∗7	BJ6-008 (A set of a, b, c, d)	BJ6-010 (A set of a, b, c, d)	BJ6-012 (A set of a, b, c, d)	BJ6-016 (A set of a, b, c, d)	BM5-020 (A set of a, b, c, d)	BM5-025 (A set of a, b, c, d)	BM5-032 (A set of a, b, c, d)	BM5-040 (A set of a, b, c, d)
	D-M9□A(V)	BJ6-008S (A set of a, b, c, e) (Screw: Stainless steel)	BJ6-010S (A set of a, b, c, e) (Screw: Stainless steel)	BJ6-012S (A set of a, b, c, e) (Screw: Stainless steel)	BJ6-016S (A set of a, b, c, e) (Screw: Stainless steel)	BM5-020S (A set of a, b, c, e) (Screw: Stainless steel)	BM5-025S (A set of a, b, c, e) (Screw: Stainless steel)	BM5-032S (A set of a, b, c, e) (Screw: Stainless steel)	BM5-040S (A set of a, b, c, e) (Screw: Stainless steel)
	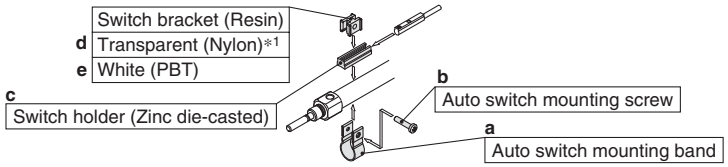								
	D-C7□/C80 **D-C73C/C80C** **D-H7□/H7□W** **D-H7BA/H7NF**	BJ2-008 (A set of a and b)	BJ2-010 (A set of a and b)	BJ2-012 (A set of a and b)	BJ2-016 (A set of a and b)	BM2-020A (A set of a and b)	BM2-025A (A set of a and b)	BM2-032A (A set of a and b)	BM2-040A (A set of a and b)
Rail mounting ∗5 ∗6	**D-M9□(V)**∗8 **D-M9□W(V)**∗8 **D-M9□A(V)**∗8 **D-A9□(V)**∗7	BQ2-012 (S) (A set of f and g)							
	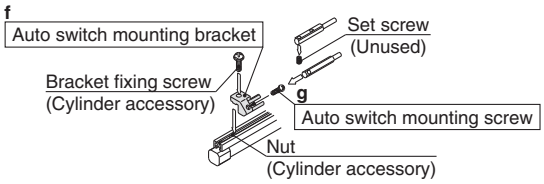								

∗1 Since the switch bracket for band mounting (made from nylon) are affected in an environment where alcohol, chloroform, methylamines, hydrochloric acid or sulfuric acid is splashed over, so it cannot be used. Please contact SMC regarding other chemicals.
∗2 In the case of band mounting auto switches, make sure the indicator LED is not directly below switch mounting bracket when mounted as the protruding LED may be damaged.
∗3 For band mounting, switch brackets are mounted on the cylinder when small switches are specified. (switches are not mounted, but packaged together).
∗4 For band mounting, when specifying the switches other than the small switches, auto switch(s) are mounted on the cylinder.
∗5 For rail mounting, the auto switches and auto switch mounting brackets are packed together (not assembled).
∗6 For rail mounting, when D-M9□A(V) is ordered separately, select the stainless steel mounting screw set BQ2-012S.
∗7 When mounting a band and/or a rail on bore size Ø 8, Ø 10 or Ø 12 cylinder, D-A9□(V) type cannot be mounted.
∗8 When mounting a rail on bore size Ø 20 or Ø 25 cylinder, D-M9□(V), M9□W(V) and M9□A(V) types cannot be mounted.

Auto Switch Mounting Bracket/Single Unit Part Nos.

Auto switch model	C85 Series						C75 Series		Parts lineup
	Ø 8	Ø 10	Ø 12	Ø 16	Ø 20	Ø 25	Ø 32	Ø 40	
D-M9□(V) **D-M9□W(V)** **D-A9□(V)**	BJ2-008	BJ2-010	BJ2-012	BJ2-016	BM2-020A	BM2-025A	BM2-032A	BM2-040A	· Auto switch mounting band (a) · Auto switch mounting screw (b)
	BJ5-2	BJ5-1							· Switch holder (c) · Switch bracket (d)
D-M9□A(V)	BJ2-008S	BJ2-010S	BJ2-012S	BJ2-016S	BM2-020AS	BM2-025AS	BM2-032AS	BM2-040AS	· Auto switch mounting band (a) · Auto switch mounting screw (b)
	BJ4-2	BJ4-1							· Switch holder (c) · Switch bracket (e)

[Stainless Steel Mounting Screw]

The following stainless steel mounting screw kit is available. Use it in accordance with the operating environment. (Since the auto switch mounting bracket is not included, order it separately.)

BBA4: For D-C7/C8/H7 types

∗ Refer to the Web Catalogue on **www.smc.eu.**

When the D-H7BA type auto switch is shipped independently, the BBA4 is attached.

Other than the applicable auto switches listed in "How to Order", the following auto switches are mountable.

Type	Model	Electrical entry	Features	Mounting	Applicable bore size
Reed	D-C73, C76	Grommet (In-line)	—	Band	Ø 8 to Ø 25
	D-C80		Without indicator light		
Solid state	D-H7A1, H7A2, H7B	Grommet (In-line)	—	Band	Ø 8 to Ø 25
	D-H7NW, H7PW, H7BW		Diagnostic indication (2-colour indicator)		

∗ Normally closed (NC = b contact) solid state auto switches (D-F9G/F9H) are also available. For details, refer to Web Catalogue on **www.smc.eu.**
∗ With pre-wired connector is also available for solid state switches. For details, refer to Web Catalogue on **www.smc.eu.**

How to Mount and Move the Auto Switch

Mounting Bracket Band Mounting Type

<Applicable auto switch>

Solid state···D-M9N, M9P, M9B, M9NV, M9PV, M9BV
D-M9NW, M9PW, M9BW, M9NWV, M9PWV, M9BWV
D-M9NA, M9PA, M9BA, M9NAV, M9PAV, M9BAV
Reed·····D-A90, A93, A96, A90V, A93V, A96V

■How to Mount and Move the Auto Switch

Mounting the Auto Switch

1. Mount the auto switch mounting band around the auto switch setting position on the cylinder tube.
2. Place the switch holder in the opening of the auto switch mounting band (1).
3. Make the concave part of the switch bracket faced downward and set the switch bracket on the switch holder (2).
   Set the switch bracket so that both ends of the auto switch mounting band enter the portion between the ribs on both side surfaces of the switch bracket.
   For the D-M9□A(V) type auto switch, do not install the switch bracket on the indicator light.
4. Pass the auto switch mounting screw (M3) supplied with the auto switch mounting band from the through-hole side of the auto switch mounting band and engage it with the M3 female thread of the auto switch mounting band through the through-hole in the switch bracket.
5. Tighten the auto switch mounting screw with the specified tightening torque to secure the switch bracket and switch holder.

Tightening torque for auto switch mounting screw [N·m]

Cylinder series	Bore size [mm]	
	Ø 8 to Ø 16	Ø 20 to Ø 40
C85/C75	0.8 to 1.0	0.6 to 0.7

6. Insert the auto switch into the auto switch mounting groove of the switch holder (2).
7. After checking the detection position, tighten the set screw (M2.5) supplied with the auto switch to secure the auto switch.
   At this time, the tightening torque for the set screw (M2.5) supplied with the auto switch must be 0.05 to 0.1 N·m.
   When tightening the set screw supplied with the auto switch, use a watchmaker's screw driver with a handle diameter of 5 to 6 mm.

Adjusting the Auto Switch Position

(1) To make the fine adjustment, loosen the set screw (M2.5) supplied with the auto switch and slide the auto switch inside the auto switch mouthing groove to adjust the position.
(2) To move the auto switch setting position largely, loosen the screw (M3) that secures the auto switch mounting band and slide the auto switch together with the switch holder on the cylinder tube to adjust the position.

⚠ Caution

1. Tighten screws with the proper tightening torque.
2. Set the auto switch mounting band perpendicularly to cylinder tube.

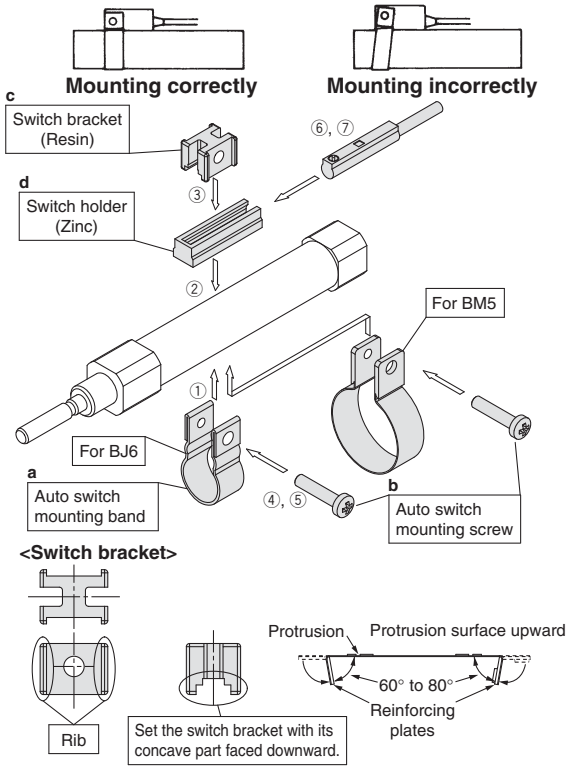

The switch brackets have different colours.
For BJ6-006: Transparent blue　For BJ6-010/016/BM5-□□□: Transparent
For BJ6-006S: Black　For BJ6-010S/016S/BM5-□□□S: White

<Precautions on BM5>

When removing the screw connection part with the auto switch mounting screw after the auto switch mounting band has been assembled, be careful not to drop the switch bracket, switch holder, auto switch mounting screw, or auto switch mounting band.

<Applicable auto switch>

Solid state···D-H7A1, D-H7A2, D-H7B, D-H7BA
D-H7C, D-H7NF, D-H7NW, D-H7PW, D-H7BW
Reed·····D-C73, D-C76, D-C80, D-C73C, D-C80C

■How to Mount and Move the Auto Switch

1. Put a mounting band on the cylinder tube and set it at the auto switch mounting position.
2. Put the mounting section of the auto switch between the band mounting holes, then adjust the position of mounting holes of switch to those of mounting band.
3. Lightly thread the auto switch mounting screw (M3) through the mounting hole into the thread part of band fitting.
4. After setting the whole body to the detecting position by sliding, tighten the mounting screw (M3) to secure the auto switch while properly contacting the auto switch bottom part and the cylinder tube. (The tightening torque of M3 screw should be as below.)
   Ø 8 to Ø 16: 0.8 to 1.0 N·m
   Ø 20 to Ø 40: 0.6 to 1.0 N·m
5. Modification of the detection position should be made in the condition of 3.
6. After auto switch is mounted and fixed, attach a protective tube on the tip of an auto switch mounting screw (M3). (For Ø 8 to Ø 16)

⚠ Caution

1. Tighten the screw under the specified torque when mounting auto switch.
2. Set the auto switch mounting band perpendicularly to cylinder tube.

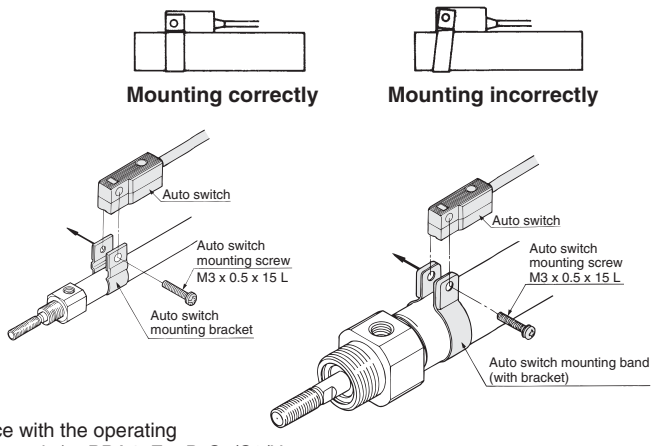

[Stainless Steel Mounting Screw]

The following stainless steel mounting screw kit is available. Use it in accordance with the operating environment. (Since the auto switch mounting band is not included, order it separately.)　BBA4: For D-C7/C8/H7
"D-H7BA" switch is set on the cylinder with the stainless steel screws above when shipped. When only an auto switch is shipped independently, the BBA4 is attached.

Stainless Steel Mounting Screw Set

Part no.	Contents			Applicable auto switch mounting bracket part nos.	Applicable auto switch
	Description	Size	Quantity		
BBA4	Auto switch mounting screw	M3 x 0.5 x 15 L	1	BJ2-008S, BJ2-010S, BJ2-012S, BJ2-016S	D-C7, C8
				BM2-020AS, BM2-025AS, BM2-03AS, BM2-040AS	D-H7

Mounting Bracket Rail Mounting Type

<Applicable auto switch>

Solid state·····D-M9N(V), D-M9P(V), D-M9B(V), D-M9NW(V), D-M9PW(V), D-M9BW(V), D-M9NA(V), D-M9PA(V), D-M9BA(V)
Reed·····D-A90(V), A93(V), A96(V)

1. Slide the auto switch mounting nut inserted into the mounting rail and set it at the auto switch mounting position.
2. Fit the convex part of the auto switch mounting bracket arm over the concave part of the rail, and slide the arm to the nut position.
3. Push the auto switch mounting screw lightly into the hexagon nut through the hole of the auto switch mounting arm.
4. Remove the set screw (M2.5) attached to the auto switch.
5. Insert the auto switch in the auto switch attachment part of the auto switch mounting bracket.
6. Secure the auto switch mounting screw (M2.5). (Tightening torque of M2.5 screw: 0.1 to 0.2 N·m)
7. Secure the auto switch mounting screw (3) (M3) after confirming the detecting position. (Tightening torque of M3 screw: 0.5 to 0.7 N·m)
8. Modify the detecting position while the auto switch is secured at the position of (3) in the figure.

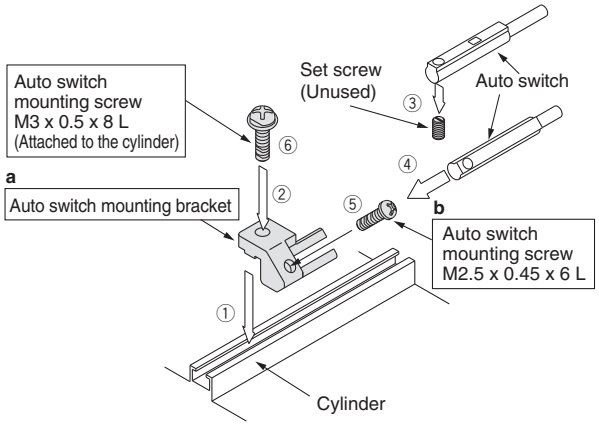

• BQ2-012 is a set of a and b shown above.

<Applicable auto switch>

Solid state·····D-F79, D-F7P, D-J79, D-F7NV, D-F7PV, D-F7BV, D-J79C, D-F79W, D-F7PW, D-J79W, D-F7NWV, D-F7BWV, D-F79F, D-F7BA, D-F7BAV,
Reed·····D-A72, D-A73, D-A80, D-A72H, D-A73H, D-A76H, D-A80H, D-A73C, D-A80C, D-A79W

■ How to Mount and Move the Auto Switch

1. Slide the auto switch mounting nut (M3) inserted into the mounting rail and set it at the auto switch mounting position.
2. Fit the convex part of auto switch mounting arm into the concave part of auto switch mounting rail. Then slide the switch over the nut.
3. Push the auto switch mounting screw (M3) lightly into the mounting nut (M3) through the hole of auto switch mounting arm.
4. After reconfirming the detecting position, tighten the mounting screw (M3) to secure the auto switch. (Tightening torque of M3 screw should be 0.5 to 0.7 N·m.)
5. Modification of the detecting position should be made in the condition of 3.

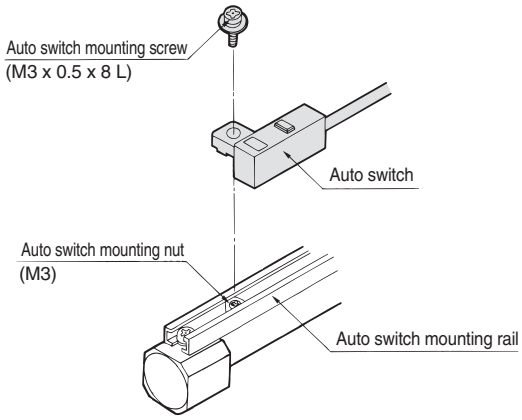

[Stainless Steel Mounting Screw]
The following stainless steel mounting screw kit (including nuts) is available. Use it in accordance with the operating environment. (Since the auto switch spacer is not included, order it separately.)
BBA2: For D-A7/A8/F7/J7
"D-F7BA" auto switch is set on the cylinder with the stainless steel screws above when shipped.
When only an auto switch is shipped independently, the BBA2 is attached.

Stainless Steel Mounting Screw Set

Part no.	Contents				Applicable auto switch mounting bracket part nos.	Applicable auto switch
	No.	Description	Size	Quantity		
BBA2	1	Auto switch mounting screw	M3 x 0.5 x 6 L	1	BMU1-025	D-A7, A8 D-F7, J7
			M3 x 0.5 x 8 L	1	BQ-1	
			M3 x 0.5 x 10 L	1	BQ-2	
	2	Auto switch mounting nut (Hexagon nut)	M3 x 0.5	1	BQ-1	
	3	Auto switch mounting nut (Convex shape)	M3 x 0.5	1	BQ-2	

∗ A spacer for BQ-2 (black resin) is not included.
∗ When using D-A9□(V)/M9□(V)/M9□W(V)/M9□A(V) auto switches with BQ2-012, use stainless steel screws suitable for the auto switch mounting bracket.

Prior to Use
Auto Switch Connections and Examples

Sink Input Specifications

3-wire, NPN

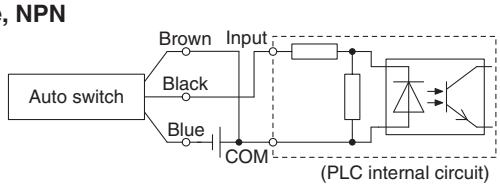

2-wire

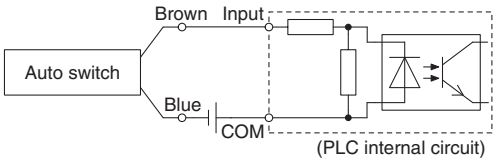

Source Input Specifications

3-wire, PNP

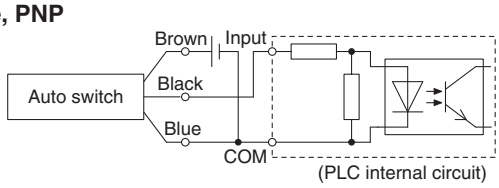

2-wire

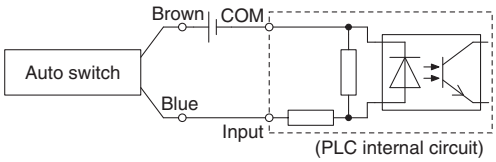

Connect according to the applicable PLC input specifications, as the connection method will vary depending on the PLC input specifications.

Examples of AND (Series) and OR (Parallel) Connections

∗ When using solid state auto switches, ensure the application is set up so the signals for the first 50 ms are invalid.

3-wire AND connection for NPN output

(Using relays)

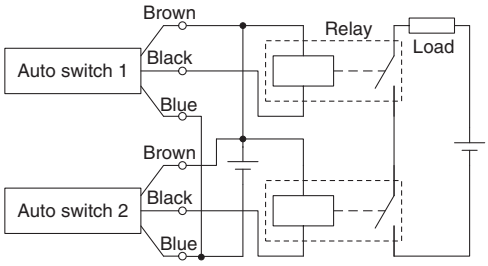

(Performed with auto switches only)

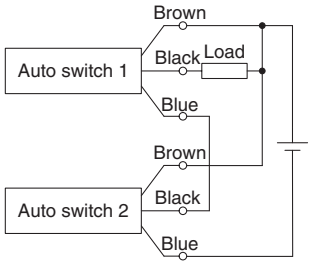

3-wire OR connection for NPN output

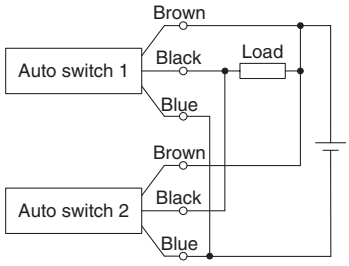

3-wire AND connection for PNP output

(Using relays)

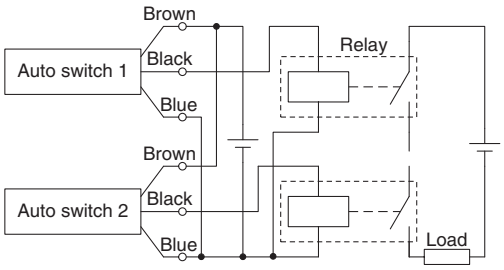

(Performed with auto switches only)

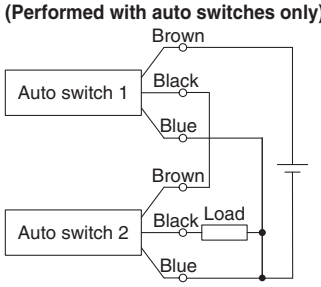

3-wire OR connection for PNP output

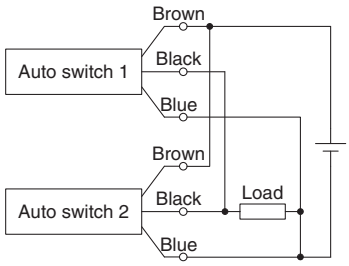

2-wire AND connection

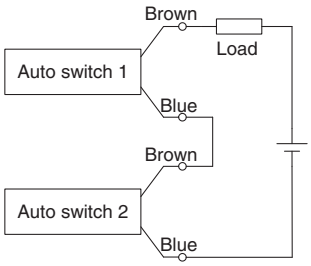

When two auto switches are connected in series, a load may malfunction because the load voltage will decline when in the ON state.
The indicator lights will light up when both of the auto switches are in the ON state.
Auto switches with a load voltage less than 20 V cannot be used.

Load voltage at ON = Power supply voltage – Residual voltage x 2 pcs.
= 24 V – 4 V x 2 pcs.
= 16 V

Example: Power supply is 24 VDC
Internal voltage drop in auto switch is 4 V.

2-wire OR connection

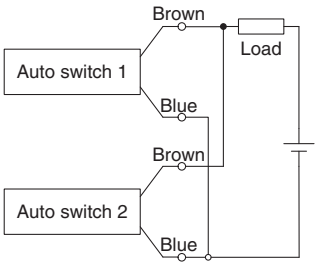

(Solid state)
When two auto switches are connected in parallel, malfunction may occur because the load voltage will increase when in the OFF state.

(Reed)
Because there is no current leakage, the load voltage will not increase when turned OFF. However, depending on the number of auto switches in the ON state, the indicator lights may sometimes grow dim or not light up, due to the dispersion and reduction of the current flowing to the auto switches.

Load voltage at OFF = Leakage current x 2 pcs. x Load impedance
= 1 mA x 2 pcs. x 3 kΩ
= 6 V

Example: Load impedance is 3 kΩ.
Leakage current from auto switch is 1 mA.

Simple Specials/Made to Order

Made to Order

Please contact SMC for detailed specifications, delivery, and prices.

■ Simple Specials

The following special specifications can be ordered as a simplified Made-to-Order.
There is a specification sheet available on paper and CD-ROM. Please contact your SMC sales representatives if necessary.

Symbol	Specifications	C85 (Standard)					C85K (Not-rotating rod)	
		Double acting				Single acting	Double acting	Single acting
		Single rod		Double rod		Single rod	Single rod	
		Rubber	Air	Rubber	Air	Rubber	Rubber	
-XA0 to 30	Change of rod end shape*1	●	●	●	●	●	●	●

■ Made to Order

Symbol	Specifications	C85 (Standard)					C85K (Not-rotating rod)	
		Double acting				Single acting	Double acting	Single acting
		Single rod		Double rod		Single rod	Single rod	
		Rubber	Air	Rubber	Air	Rubber	Rubber	
-XB6	Heat resistant cylinder (-10 to 150 °C)*2	●		●				
-XB7	Cold resistant cylinder (-40 to 70 °C)*3	●		●				
-XB9	Low speed cylinder (10 to 50 mm/s)*3	●						
-XC4	With heavy duty scraper*3	●		●				
-XC6□	Made of stainless steel	●	●	●	●	●	●	●

*1 Exclude Ø 8 air cushion.
*2 Rubber bumper Ø 10 to Ø 40 only
*3 Rubber bumper Ø 20, Ø 25, Ø 32 and Ø 40 only
*4 For front mounting, Ø 20 and Ø 25 are only available.

C85R (Direct mount)※4		C75 (Standard)					C75K (Not-rotating rod)		C75R (Direct mount)		Symbol	Page
Double acting (Bottom side mounting)	Double acting (Front side mounting)	Double acting				Single acting	Double acting	Single acting	Double acting (Bottom side mounting)	Double acting (Front side mounting)		
Single rod		Single rod		Double rod		Single rod	Single rod		Single rod			
Rubber		Rubber	Air	Rubber	Air	Rubber	Rubber		Rubber			
●	●	●	●	●	●	●	●	●	●	●	-XA0 to 30	117

C85R (Direct mount)※4		C75 (Standard)					C75K (Not-rotating rod)		C75R (Direct mount)		Symbol	Page
Double acting (Bottom side mounting)	Double acting (Front side mounting)	Double acting				Single acting	Double acting	Single acting	Double acting (Bottom side mounting)	Double acting (Front side mounting)		
Single rod		Single rod		Double rod		Single rod	Single rod		Single rod			
Rubber		Rubber	Air	Rubber	Air	Rubber	Rubber		Rubber			
●	●	●		●					●	●	-XB6	119
●	●	●		●					●	●	-XB7	119
●	●	●							●	●	-XB9	120
		●									-XC4	120
●	●	●	●	●	●	●			●	●	-XC6□	120

C85/C75 Series
Simple Specials

These changes are dealt with Simple Specials System.

For details, refer to the Simple Specials System in the Web Catalogue.
http://www.smc.eu

1 Change of Rod End Shape

Symbol
-XA0 to XA30

Applicable Series

Series	Description	Model	Action	Note
C85	Standard	C85	Double acting, Single rod	Exclude Ø 8 air cushion.
		C85W	Double acting, Double rod	Exclude Ø 8 air cushion.
		C85	Single acting (Spring return/extend)	
	Non-rotating rod	C85K	Double acting, Single rod	
		C85K	Single acting (Spring return/extend)	
	Direct mount	C85R	Double acting, Single rod	For front mounting, Ø 20 and Ø 25 are only available.
C75	Standard	C75	Double acting, Single rod	
		C75W	Double acting, Double rod	
		C75	Single acting (Spring return/extend)	
	Non-rotating rod	C75K	Double acting, Single rod	
		C75K	Single acting (Spring return/extend)	
	Direct mount	C75R	Double acting, Single rod	

Precautions

1. SMC will make appropriate arrangements if no dimension, tolerance, or finish instructions are given in the diagram.
2. Standard dimensions marked with "*" will be as follows to the rod diameter (D). Enter any special dimension you desire.
   $D \leq 6 \rightarrow D-1$ mm, $6 < D \leq 25 \rightarrow D-2$ mm, $D > 25 \rightarrow D-4$ mm
3. In the case of double rod type and single acting retraction type, enter the dimensions when the rod is retracted.

Symbol: A0

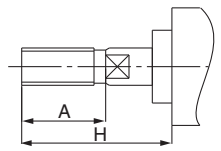

Symbol: A1

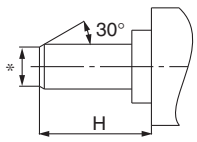

Symbol: A2

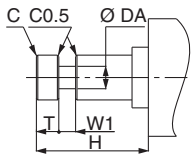

Symbol: A3

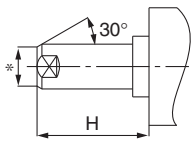

Symbol: A4

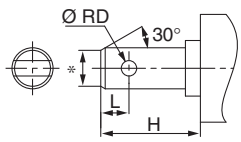

Symbol: A5

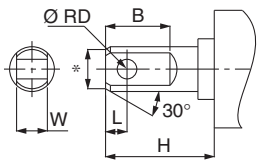

Symbol: A6

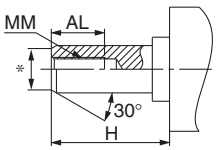

Symbol: A7

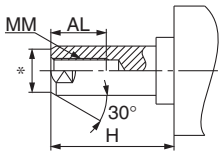

Symbol: A8

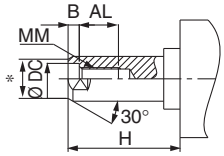

Symbol: A9

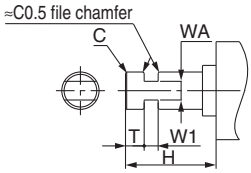

Symbol: A10

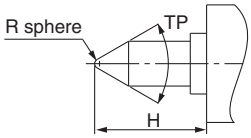

Symbol: A11

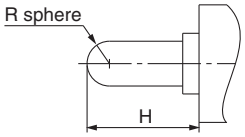

Symbol: A12

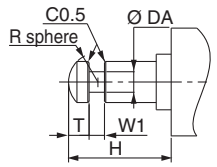

Symbol: A13

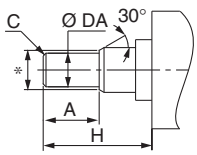

Symbol: A14

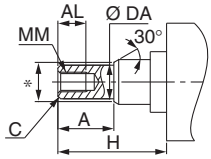

Symbol: A15

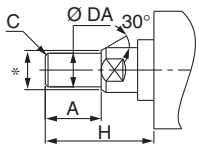

Symbol: A16

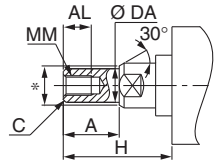

Symbol: A17

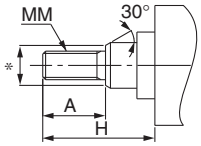

Symbol: A18

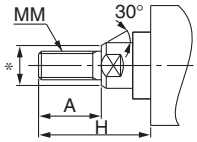

Symbol: A19

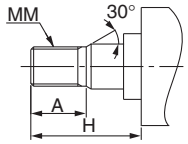

Symbol: A20

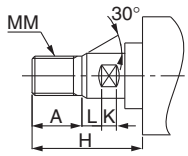

Symbol: A21

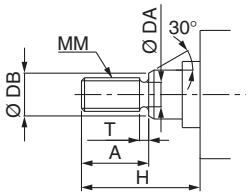

Symbol: A22

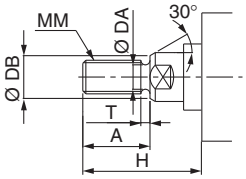

Symbol: A23

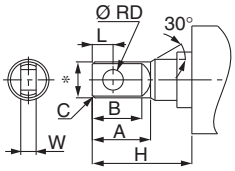

Symbol: A24

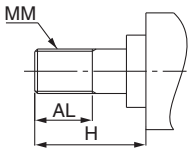

Symbol: A25

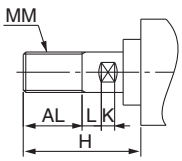

Symbol: A26

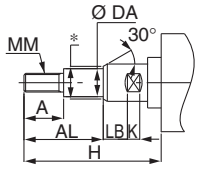

Symbol: A27

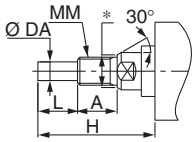

Symbol: A28

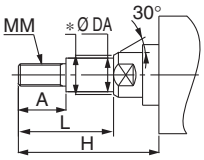

Symbol: A29

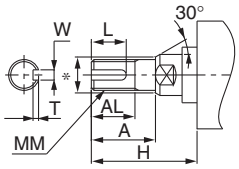

Symbol: A30

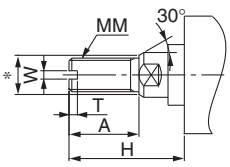

Made to Order

Please contact SMC for detailed dimensions, specifications, and lead times.

Made to Order

1 Heat Resistant Cylinder (-10 to 150 °C)

Symbol **-XB6**

Air cylinder which changed the seal material and grease, so that it could be used even at higher temperature up to 150 from -10 °C.

Applicable Series

Series	Description	Model	Action	Note
C85	Standard	C85	Double acting, Single rod	Rubber bumper Ø 10 to Ø 25 only
		C85W	Double acting, Double rod	Rubber bumper Ø 10 to Ø 25 only
	Direct mount	C85R	Double acting, Single rod	Ø 20, Ø 25 only
C75	Standard	C75	Double acting, Single rod	Rubber bumper only
		C75W	Double acting, Double rod	Rubber bumper only
	Direct mount	C75R	Double acting, Single rod	

∗ Operate without lubrication from a pneumatic system lubricator.
∗ Please contact SMC for details on the maintenance intervals for this cylinder, which differ from those of the standard cylinder.
∗ In principle, it is impossible to make built-in magnet type and the one with auto switch. But, as for the one with auto switch, and the heat resistant cylinder with heat resistant auto switch, please contact SMC.
∗ Piston speed is ranged from 50 to 500 mm/s.

Specifications

Ambient temperature range	-10 °C to 150 °C
Seal material	Fluororubber
Grease	Heat resistant grease
Auto switch	Not mountable∗1
Dimensions	Same as standard
Specifications other than above	Same as standard

∗1 Manufacturing built-in magnet type and the one with auto switch is impossible.

⚠ Warning

Precautions

Be aware that smoking cigarettes etc. after your hands have come into contact with the grease used in this cylinder can create a gas that is hazardous to humans.

How to Order

Standard model no. – **XB6**

Heat resistant cylinder

2 Cold Resistant Cylinder (-40 to 70 °C)

Symbol **-XB7**

Air cylinder which changed the seal material and grease, so that it could be used even at lower temperature down to -40 °C.

Applicable Series

Series	Description	Model	Action	Note
C85	Standard	C85	Double acting, Single rod	Rubber bumper Ø 20 to Ø 25 only
		C85W	Double acting, Double rod	Rubber bumper Ø 20 to Ø 25 only
	Direct mount	C85R	Double acting, Single rod	Ø 20, Ø 25 only
C75	Standard	C75	Double acting, Single rod	Rubber bumper only
		C75W	Double acting, Double rod	Rubber bumper only
	Direct mount	C75R	Double acting, Single rod	

∗ Operate without lubrication from a pneumatic system lubricator.
∗ Use dry air which is suitable for heatless air dryer etc. not to cause the moisture to be frozen.
∗ Please contact SMC for details on the maintenance intervals for this cylinder, which differ from those of the standard cylinder.
∗ Manufacturing built-in magnet type and mounting an auto switch are impossible.
∗ No cushion type is adopted. Piston speed is ranged from 50 to 500 mm/s.

Specifications

Ambient temperature range	-40 °C to 70 °C
Seal material	Low nitrile rubber
Grease	Cold resistant grease
Auto switch	Not mountable∗1
Dimensions	Same as standard
Specifications other than above	Same as standard

∗1 Manufacturing built-in magnet type and the one with auto switch is impossible.

⚠ Warning

Precautions

Be aware that smoking cigarettes etc. after your hands have come into contact with the grease used in this cylinder can create a gas that is hazardous to humans.

How to Order

Standard model no. – **XB7**

Cold resistant cylinder

3 Low Speed Cylinder (10 to 50 mm/s)

Symbol **-XB9**

Even if driving at lower speeds 10 to 50 mm/s, there would be no stick-slip phenomenon and it can run smoothly.

Applicable Series

Series	Description	Model	Action	Note
C85	Standard	C85	Double acting, Single rod	Rubber bumper Ø 20 to Ø 25 only
	Direct mount	C85R	Double acting, Single rod	Ø 20, Ø 25 only
C75	Standard	C75	Double acting, Single rod	Rubber bumper only
	Direct mount	C75R	Double acting, Single rod	

How to Order

Standard model no. – XB9

Low speed cylinder

Specifications

Piston speed	10 to 50 mm/s
Dimensions	Same as standard
Specifications other than above	Same as standard

∗ Operate without lubrication from a pneumatic system lubricator.

⚠Warning

Precautions

Be aware that smoking cigarettes etc. after your hands have come into contact with the grease used in this cylinder can create a gas that is hazardous to humans.

4 With Heavy Duty Scraper

Symbol **-XC4**

It is suitable for using cylinders under the environment, where there are much dusts in a surrounding area by using a heavy duty scraper on the wiper ring, or using cylinders under earth and sand exposed to the die-casted equipment, construction machinery, or industrial vehicles.

Applicable Series

Series	Description	Model	Action	Note
C85	Standard	C85	Double acting, Single rod	Rubber bumper Ø 20 to Ø 25 only
		C85W	Double acting, Double rod	Rubber bumper Ø 20 to Ø 25 only
C75	Standard	C75	Double acting, Single rod	Rubber bumper only

How to Order

Standard model no. – XC4

With heavy duty scraper

Specifications: Same as standard

⚠Caution

Either heavy duty scraper or rod seal cannot be replaced.

Construction (Dimensions are the same as standard.)

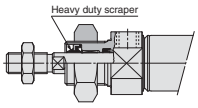

5 Made of Stainless Steel

Symbol **-XC6□**

Suitable for the cases it is likely to generate rust by being immersed in the water and corrosion.

Applicable Series

Series	Description	Model	Action	Note
C85	Standard	C85	Double acting, Single rod	
		C85W	Double acting, Double rod	
		C85	Single acting (Spring return/extend)	
	Non-rotating rod	C85K	Double acting, Single rod	
		C85K	Single acting (Spring return/extend)	
	Direct mount	C85R	Double acting, Single rod	XC6A only
C75	Standard	C75	Double acting, Single rod	
		C75W	Double acting, Double rod	
		C75	Single acting (Spring return/extend)	
	Direct mount	C75R	Double acting, Single rod	XC6A only

How to Order

Standard model no. – XC6 A

Made of stainless steel

Parts changed to stainless steel

A	Piston rod, Rod end nut
B	Piston rod, Rod end nut, Mounting nut

Specifications

Parts changed to stainless steel	Piston rod, Rod end nut
Specifications other than above and external dimensions	Same as standard

Description	Bore size [mm]					
	8	10	12	16	20	25
Rod end nut	C85NT08A-S	C85NT08A-S	C85NT10A-S	C85NT10A-S	C85NT20A-S	C85NT25A-S
Mounting nut	C85NT08B-S	C85NT08B-S	C85NT10B-S	C85NT10B-S	C85NT20B-S	C85NT20B-S

Description	Bore size [mm]	
	32	40
Rod end nut	C76NT32A-S	C76NT40A-S
Mounting nut	C76NT32B-S	C76NT40B-S

SMC

⚠ Safety Instructions

These safety instructions are intended to prevent hazardous situations and/or equipment damage. These instructions indicate the level of potential hazard with the labels of **"Caution," "Warning"** or **"Danger."** They are all important notes for safety and must be followed in addition to International Standards (ISO/IEC)*1), and other safety regulations.

⚠ Caution: **Caution** indicates a hazard with a low level of risk which, if not avoided, could result in minor or moderate injury.

⚠ Warning: **Warning** indicates a hazard with a medium level of risk which, if not avoided, could result in death or serious injury.

⚠ Danger : **Danger** indicates a hazard with a high level of risk which, if not avoided, will result in death or serious injury.

*1) ISO 4414: Pneumatic fluid power – General rules relating to systems.
ISO 4413: Hydraulic fluid power – General rules relating to systems.
IEC 60204-1: Safety of machinery – Electrical equipment of machines. (Part 1: General requirements)
ISO 10218-1: Manipulating industrial robots - Safety.
etc.

⚠ Warning

1. **The compatibility of the product is the responsibility of the person who designs the equipment or decides its specifications.**
   Since the product specified here is used under various operating conditions, its compatibility with specific equipment must be decided by the person who designs the equipment or decides its specifications based on necessary analysis and test results. The expected performance and safety assurance of the equipment will be the responsibility of the person who has determined its compatibility with the product. This person should also continuously review all specifications of the product referring to its latest catalogue information, with a view to giving due consideration to any possibility of equipment failure when configuring the equipment.
2. **Only personnel with appropriate training should operate machinery and equipment.**
   The product specified here may become unsafe if handled incorrectly. The assembly, operation and maintenance of machines or equipment including our products must be performed by an operator who is appropriately trained and experienced.
3. **Do not service or attempt to remove product and machinery/equipment until safety is confirmed.**
   1. The inspection and maintenance of machinery/equipment should only be performed after measures to prevent falling or runaway of the driven objects have been confirmed.
   2. When the product is to be removed, confirm that the safety measures as mentioned above are implemented and the power from any appropriate source is cut, and read and understand the specific product precautions of all relevant products carefully.
   3. Before machinery/equipment is restarted, take measures to prevent unexpected operation and malfunction.
4. **Contact SMC beforehand and take special consideration of safety measures if the product is to be used in any of the following conditions.**
   1. Conditions and environments outside of the given specifications, or use outdoors or in a place exposed to direct sunlight.
   2. Installation on equipment in conjunction with atomic energy, railways, air navigation, space, shipping, vehicles, military, medical treatment, combustion and recreation, or equipment in contact with food and beverages, emergency stop circuits, clutch and brake circuits in press applications, safety equipment or other applications unsuitable for the standard specifications described in the product catalogue.
   3. An application which could have negative effects on people, property, or animals requiring special safety analysis.
   4. Use in an interlock circuit, which requires the provision of double interlock for possible failure by using a mechanical protective function, and periodical checks to confirm proper operation.

Limited warranty and Disclaimer/ Compliance Requirements

The product used is subject to the following "Limited warranty and Disclaimer" and "Compliance Requirements".
Read and accept them before using the product.

Limited warranty and Disclaimer

1. The warranty period of the product is 1 year in service or 1.5 years after the product is delivered, wichever is first.*2)
   Also, the product may have specified durability, running distance or replacement parts. Please consult your nearest sales branch.
2. For any failure or damage reported within the warranty period which is clearly our responsibility, a replacement product or necessary parts will be provided.
   This limited warranty applies only to our product independently, and not to any other damage incurred due to the failure of the product.
3. Prior to using SMC products, please read and understand the warranty terms and disclaimers noted in the specified catalogue for the particular products.

*2) **Vacuum pads are excluded from this 1 year warranty.**
A vacuum pad is a consumable part, so it is warranted for a year after it is delivered.
Also, even within the warranty period, the wear of a product due to the use of the vacuum pad or failure due to the deterioration of rubber material are not covered by the limited warranty.

Compliance Requirements

1. The use of SMC products with production equipment for the manufacture of weapons of mass destruction (WMD) or any other weapon is strictly prohibited.
2. The exports of SMC products or technology from one country to another are governed by the relevant security laws and regulations of the countries involved in the transaction. Prior to the shipment of a SMC product to another country, assure that all local rules governing that export are known and followed.

⚠ Caution

1. **The product is provided for use in manufacturing industries.**
   The product herein described is basically provided for peaceful use in manufacturing industries.
   If considering using the product in other industries, consult SMC beforehand and exchange specifications or a contract if necessary.
   If anything is unclear, contact your nearest sales branch.

⚠ Caution

SMC products are not intended for use as instruments for legal metrology.
Measurement instruments that SMC manufactures or sells have not been qualified by type approval tests relevant to the metrology (measurement) laws of each country. Therefore, SMC products cannot be used for business or certification ordained by the metrology (measurement) laws of each country.

⚠ Safety Instructions Be sure to read "Handling Precautions for SMC Products" (M-E03-3) before using.

SMC Corporation (Europe)

Austria	☎ +43 (0)2262622800	www.smc.at	office@smc.at
Belgium	☎ +32 (0)33551464	www.smcpneumatics.be	info@smcpneumatics.be
Bulgaria	☎ +359 (0)2807670	www.smc.bg	office@smc.bg
Croatia	☎ +385 (0)13707288	www.smc.hr	office@smc.hr
Czech Republic	☎ +420 541424611	www.smc.cz	office@smc.cz
Denmark	☎ +45 70252900	www.smcdk.com	smc@smcdk.com
Estonia	☎ +372 6510370	www.smcpneumatics.ee	smc@smcpneumatics.ee
Finland	☎ +358 207513513	www.smc.fi	smcfi@smc.fi
France	☎ +33 (0)164761000	www.smc-france.fr	info@smc-france.fr
Germany	☎ +49 (0)61034020	www.smc.de	info@smc.de
Greece	☎ +30 210 2717265	www.smchellas.gr	sales@smchellas.gr
Hungary	☎ +36 23511390	www.smc.hu	office@smc.hu
Ireland	☎ +353 (0)14039000	www.smcpneumatics.ie	sales@smcpneumatics.ie
Italy	☎ +39 0292711	www.smcitalia.it	mailbox@smcitalia.it
Latvia	☎ +371 67817700	www.smclv.lv	info@smclv.lv
Lithuania	☎ +370 5 2308118	www.smclt.lt	info@smclt.lt
Netherlands	☎ +31 (0)205318888	www.smcpneumatics.nl	info@smcpneumatics.nl
Norway	☎ +47 67129020	www.smc-norge.no	post@smc-norge.no
Poland	☎ +48 222119600	www.smc.pl	office@smc.pl
Portugal	☎ +351 226166570	www.smc.eu	postpt@smc.smces.es
Romania	☎ +40 213205111	www.smcromania.ro	smcromania@smcromania.ro
Russia	☎ +7 8127185445	www.smc-pneumatik.ru	info@smc-pneumatik.ru
Slovakia	☎ +421 (0)413213212	www.smc.sk	office@smc.sk
Slovenia	☎ +386 (0)73885412	www.smc.si	office@smc.si
Spain	☎ +34 902184100	www.smc.eu	post@smc.smces.es
Sweden	☎ +46 (0)86031200	www.smc.nu	post@smc.nu
Switzerland	☎ +41 (0)523963131	www.smc.ch	info@smc.ch
Turkey	☎ +90 212 489 0 440	www.smcpnomatik.com.tr	info@smcpnomatik.com.tr
UK	☎ +44 (0)845 121 5122	www.smcpneumatics.co.uk	sales@smcpneumatics.co.uk

SMC CORPORATION Akihabara UDX 15F, 4-14-1, Sotokanda, Chiyoda-ku, Tokyo 101-0021, JAPAN Phone: 03-5207-8249 FAX: 03-5298-5362

1st printing TT printing TU 00 Printed in Spain

Specifications are subject to change without prior notice and any obligation on the part of the manufacturer.