Air Cylinder

Ø 20, Ø 25, Ø 32, Ø 40, Ø 50, Ø 63, Ø 80, Ø 100

RoHS

New

- A single acting type has been added.

- A direct mount type has been added.

- An end lock type has been added.

Improved piping flexibility

- Piping can be connected every 90 degrees (4 positions).
- Suitable piping position can be selected during designing phase.
  (Made to order: **XC3**)

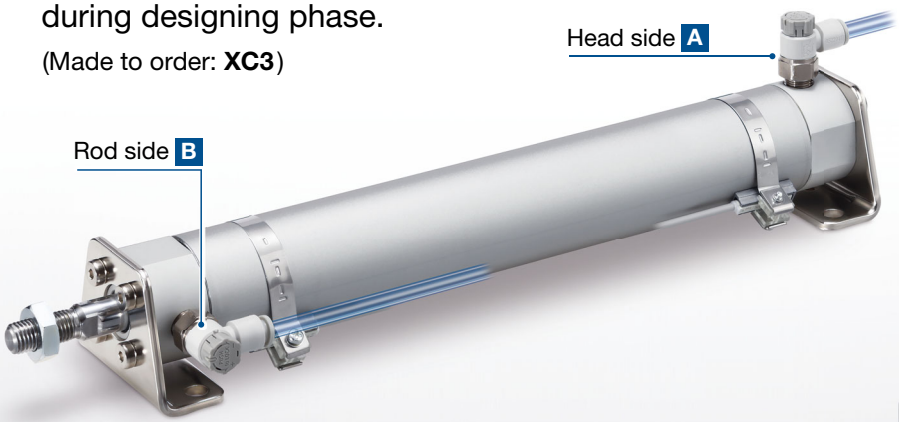

Port location viewed from the rod side

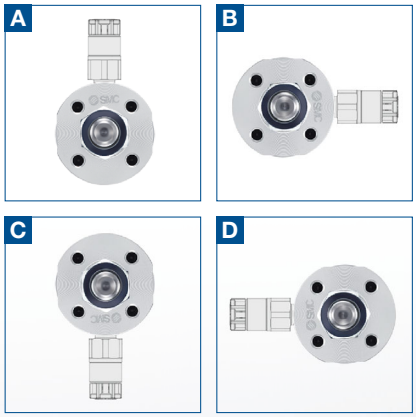

Cylinder with rod end bracket is standardised.

Interchangeable in mounting with the existing model

* Excludes long stroke types (Refer to page 50 for the type that is interchangeable with the long stroke type of the same bore size.)

CG1 Series

SMC

CAT.EUS20-268B-UK

Stroke Variations

[mm]

Bore size	Standard stroke 25	50	75	100	125	150	200	250	300	Max. manufacturable stroke
20	●	●	●	●	●	●	●			1500
25	●	●	●	●	●	●	●	●	●	
32	●	●	●	●	●	●	●	●	●	
40	●	●	●	●	●	●	●	●	●	
50	●	●	●	●	●	●	●	●	●	
63	●	●	●	●	●	●	●	●	●	
80	●	●	●	●	●	●	●	●	●	
100	●	●	●	●	●	●	●	●	●	

Series Variations

∗ For details about the clean series, refer to the **catalogue on www.smc.eu**.

Series	Action	Type	Cushion	Bore size [mm] 20	25	32	40	50	63	80	100	Variations: With rod boot	Air-hydro	Clean series	Page
New Standard **CG1-Z1**	Double acting	Single rod	Rubber bumper	●	●	●	●	●	●	●	●	●		●	4
			Air cushion	●	●	●	●	●	●	●	●	●		●	
New Standard **CG1-Z1**	Single acting	Single rod (Spring return/ extend)	Rubber bumper	●	●	●	●								18
New Direct mount **CG1R-Z1**	Double acting	Single rod	Rubber bumper	●	●	●	●	●	●						27
			Air cushion	●	●	●	●	●	●						
New With end lock **CBG1-Z1**	Double acting	Single rod	Rubber bumper	●	●	●	●	●	●	●	●	●			31
			Air cushion	●	●	●	●	●	●	●	●	●			
Standard **CG1-Z** 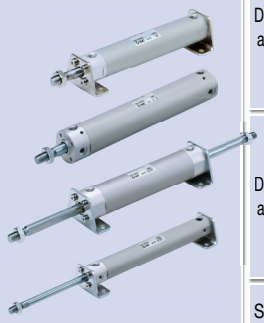	Double acting	Single rod	Rubber bumper	●	●	●	●	●	●	●	●	●	●	●	Catalogue on www.smc.eu
			Air cushion	●	●	●	●	●	●	●	●	●			
	Double acting	Double rod	Rubber bumper	●	●	●	●	●	●	●	●	●	●	●	
			Air cushion	●	●	●	●	●	●	●	●	●			
	Single acting	Single rod (Spring return/ extend)	Rubber bumper	●	●	●	●								
Non-rotating rod **CG1K-Z** 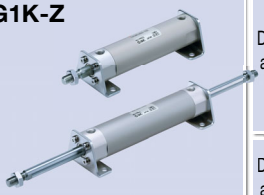	Double acting	Single rod	Rubber bumper	●	●	●	●	●	●						
			Air cushion				●	●	●						
	Double acting	Double rod	Rubber bumper	●	●	●	●	●	●						
Direct mount Non-rotating rod **CG1KR-Z** 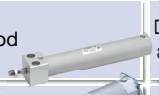	Double acting	Single rod	Rubber bumper	●	●	●	●	●	●						
Smooth Cylinder **CG1Y-Z**	Double acting	Single rod	Rubber bumper	●	●	●	●	●	●	●	●				

Various mounting bracket options

- Mounting brackets suitable for various installation conditions
- Improved mounting flexibility

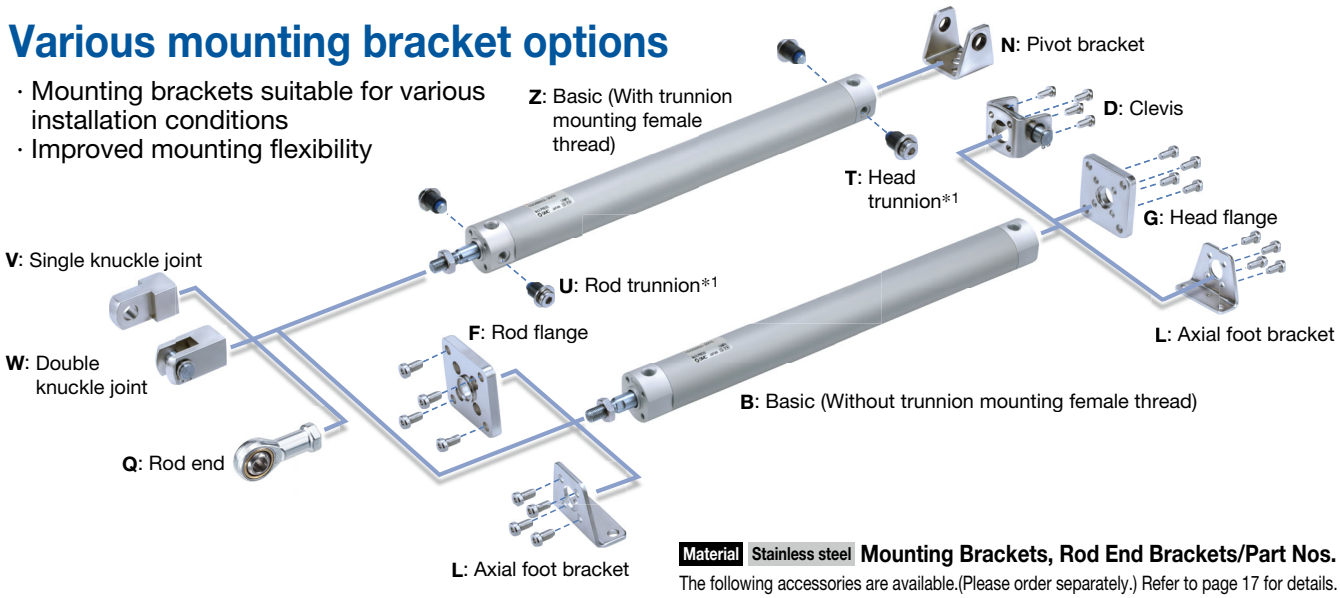

*1 Trunnion bracket type can be mounted to the CG1□Z (with trunnion mounting female thread).

Material Stainless steel **Mounting Brackets, Rod End Brackets/Part Nos.**

The following accessories are available.(Please order separately.) Refer to page 17 for details.

Bore size [mm]	Foot bracket	Flange	Single knuckle joint	Double knuckle joint	Rod end nut
32, 40, 50, 63, 80, 100	○	○	○	○	○

Part numbers for products with a rod end bracket and/or a pivot bracket

It is not necessary to order a bracket for the applicable cylinder separately.

* Mounting brackets are shipped together with the product but do not come assembled.

Example) **CDG1 D N20-50Z1- N W -M9BW**

Mounting

Pivot bracket

—	No bracket	
N	Pivot bracket	Kit of pivot bracket and clevis / Kit of pivot bracket and trunnion

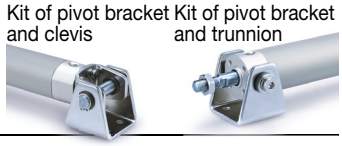

* Applicable only to D, U, and T mounting types

Rod end bracket

—	No bracket	
V	Single knuckle joint	
W	Double knuckle joint	
Q	Rod end	

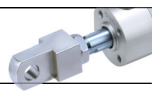

Environmentally Resistant Specifications

Water Resistant / Corrosion Resistant

Stainless steel cylinder (CG5 Series) ..... **Catalogue on www.smc.eu**

Water Resistant

The use of a special scraper allows for improved water resistance.

Water resistant cylinder (CG1□R/V) ..... **Catalogue on www.smc.eu**

Corrosion Resistant

Fluororubber seal (-XC22) ..... **Catalogue on www.smc.eu**

Dust Resistant

Durability is 4 times stronger than the standard model ..... **Catalogue on www.smc.eu**

Prevents dust, etc., adhered to the rod from entering the internal parts

With heavy duty scraper (-XC4) ..... **Catalogue on www.smc.eu**

Spatter Resistant

With coil scraper (-XC35) ..... **Catalogue on www.smc.eu**

Temperature Measures

Heat resistant/
Cold resistant cylinder (-XB6, -XB7) ..... **Catalogue on www.smc.eu**

Refer to "Operating Environment" in the Actuator Precautions.

Applications Requiring Lateral Load Resistance

For use in applications in which a lateral load exceeding the allowable value is to be applied, consider using a guide cylinder.

CONTENTS

Air Cylinder *CG1 Series*

Standard Type: Double Acting, Single Rod CG1 Series

How to Order ..... p. 4
Specifications ..... p. 5
Weight ..... p. 6
Replacement Parts ..... p. 8
Dimensions ..... p. 9
Dimensions of Accessories ..... p. 16

Standard Type: Single Acting, Spring Return/Extend CG1 Series

How to Order ..... p. 18
Specifications ..... p. 19
Weight ..... p. 20
Replacement Parts ..... p. 21
Dimensions ..... p. 22

Direct Mount Type: Double Acting CG1R Series

How to Order ..... p. 27
Specifications ..... p. 28
Weight ..... p. 29
Replacement Parts ..... p. 29
Dimensions ..... p. 30

With End Lock CBG1 Series

How to Order ..... p. 31
Specifications ..... p. 32
Replacement Parts ..... p. 33
Dimensions ..... p. 34

Auto Switch Mounting ..... p. 39
Made to Order: Individual Specifications ..... p. 50
Specific Product Precautions ..... p. 51
Safety Instructions ..... Back cover

Air Cylinder: Standard Type
Double Acting, Single Rod

CG1 Series

RoHS

Ø 20, Ø 25, Ø 32, Ø 40, Ø 50, Ø 63, Ø 80, Ø 100

How to Order

CG1 B N 20 □ – 100 □ □ Z1 – □ □ – □

With auto switch: CDG1 B N 20 □ – 100 □ □ Z1 – □ □ – M9BW □ – □

With auto switch (Built-in magnet)

❶ ❷ ❸ ❹ ❺ ❻ ❼ ❽ ❾ ❿ ⓫ ⓬

❶ Mounting

B	Basic (Without trunnion mounting female thread)
Z*1	Basic (With trunnion mounting female thread)
L	Axial foot bracket
F	Rod flange
G	Head flange
U*1	Rod trunnion
T*1	Head trunnion
D	Clevis

*1 Not available for Ø 80 and Ø 100
* Mounting brackets are shipped together with the product but do not come assembled.
* The cylinder for L, F, G, and D mounting types is B: Basic (Without trunnion mounting female thread).

The presence of the trunnion mounting female thread (B, Z) is different from the existing product. Choose Z (with trunnion mounting female thread) when mounting the trunnion afterward.

❷ Type

N	Rubber bumper
A	Air cushion

* **For the ordering example of cylinder assembly ⇒ p. 6**

❸ Bore size

20	20 mm	40	40 mm	80	80 mm
25	25 mm	50	50 mm	100	100 mm
32	32 mm	63	63 mm		

❹ Port thread type

Rubber bumper

—	Rc	Ø 20 to Ø 100
TN	NPT	Ø 20 to Ø 100
TF	M5 x 0.8	Ø 20, Ø 25
	G	Ø 32 to Ø 100

Air cushion

M5 x 0.8	Ø 20, Ø 25
Rc	Ø 32 to Ø 100
NPT*1	Ø 32 to Ø 100
G*1	Ø 32 to Ø 100

*1 Not available for Ø 20 and Ø 25.

❺ Cylinder stroke [mm]

For standard strokes ⇒ p. 5

❻ Rod end thread

—	Male rod end
F	Female rod end

❾ Rod end bracket

—	No bracket
V	Single knuckle joint
W	Double knuckle joint
Q	Rod end

* No bracket is provided for the female rod end.
* The rod end bracket is shipped together with the product but does not come assembled.
* A knuckle joint pin is not provided with the single knuckle joint.

❼ Suffix for cylinder (Rod boot)

—	Without rod boot
J	Nylon tarpaulin
K	Heat-resistant tarpaulin

* In the case of w/rod boot, and a foot bracket or rod flange as a bracket, those parts are to be assembled at the time of shipment.
* For female rod end, no rod boot is provided.

❽ Pivot bracket

—	No bracket
N	Pivot bracket

* Only for D, U, and T mounting types
* The pivot bracket is shipped together with the product but does not come assembled.

❿ Auto switch

—	Without auto switch

* For applicable auto switches, refer to the table below.

⓫ Number of auto switches

—	2
S	1
n	n

⓬ Made to order

For details ⇒ p. 5

Applicable Auto Switches / Refer to the **catalogue on www.smc.eu** for further information on auto switches.

Type	Special function	Electrical entry	Indicator light	Wiring (Output)	Load voltage DC		Load voltage AC	Auto switch model / Applicable bore size: Ø 20 to Ø 63 Perpendicular	Ø 20 to Ø 63 In-line	Ø 80, Ø 100 In-line	Lead wire length [m] 0.5 (—)	1 (M)	3 (L)	5 (Z)	Pre-wired connector	Applicable load	
Solid state auto switch	—	Grommet	Yes	3-wire (NPN)	24 V	5 V, 12 V	—	M9NV	M9N	—	●	●	●	○	○	IC circuit	Relay, PLC
								—	—	G59	●	—	●	○	○		
				3-wire (PNP)				M9PV	M9P	—	●	●	●	○	○		
								—	—	G5P	●	—	●	○	○		
				2-wire		12 V		M9BV	M9B	—	●	●	●	○	○	—	
								—	—	K59	●	—	●	○	○		
	Diagnostic indication (2-colour indicator)	Grommet		3-wire (NPN)		5 V, 12 V		M9NWV	M9NW	—	●	●	●	○	○	IC circuit	
								—	—	G59W	●	—	●	○	○		
				3-wire (PNP)				M9PWV	M9PW	—	●	●	●	○	○		
								—	—	G5PW	●	—	●	○	○		
				2-wire		12 V		M9BWV	M9BW	—	●	●	●	○	○	—	
								—	—	K59W	●	—	●	○	○		
	Water resistant (2-colour indicator)			3-wire (NPN)		5 V, 12 V		M9NAV*1	M9NA*1	—	○	○	●	○	○	IC circuit	
				3-wire (PNP)				M9PAV*1	M9PA*1	—	○	○	●	○	○		
				2-wire		12 V		M9BAV*1	M9BA*1	—	○	○	●	○	○	—	
								—	—	G5BA*1	—	—	●	○	○		
Reed auto switch	—	Grommet	Yes	3-wire (NPN equivalent)	—	5 V	—	A96V	A96	—	●	●	●	●	○	IC circuit	—
				2-wire	24 V	12 V	100 V	A93V	A93	—	●	●	●	●	○*2	—	Relay, PLC
			No				100 V or less	A90V	A90	—	●	●	●	●	○*2	IC circuit	
			Yes				100 V, 200 V	—	—	B54	●	—	●	●	—	—	
			No				200 V or less	—	—	B64	●	—	●	—	—		

*1 Water-resistant type auto switches can be mounted on the above models, but SMC cannot guarantee water resistance.
A water-resistant type cylinder is recommended for use in an environment which requires water resistance.
*2 The load voltage used is 24 VDC.
* Lead wire length symbols: 0.5 m····· — (Example) M9NW
1 m····· M (Example) M9NWM
3 m····· L (Example) M9NWL
5 m····· Z (Example) M9NWZ

* Auto switches marked with a "○" are produced upon receipt of order.

* There are applicable auto switches other than those listed above. For details ⇒ p. 47
* For details on auto switches with pre-wired connectors ⇒ Refer to the **catalogue on www.smc.eu**.
* The D-A9□□/M9□□□ auto switches are shipped together with the product but do not come assembled. (Only the auto switch mounting brackets are assembled before shipment.)

Symbol

Rubber bumper

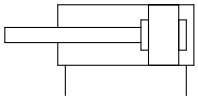

Air cushion

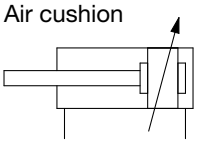

Made to Order

Made to Order: Individual Specifications
(For details, refer to page 50.)

Symbol	Specifications
-X446	PTFE grease
-X3252	Interchangeable for long strokes for existing bore size

Made to Order Common Specifications
(For details, refer to the catalogue on www.smc.eu.)

Symbol	Specifications
-XA□	Change of rod end shape
-XB6	Heat resistant cylinder (–10 to 150 °C)*1
-XB7	Cold resistant cylinder (–40 to 70 °C)*2
-XB9	Low speed cylinder (10 to 50 mm/s)
-XB13	Low speed cylinder (5 to 50 mm/s)
-XC3	Special port location
-XC4	With heavy duty scraper
-XC6	Made of stainless steel
-XC13	Auto switch rail mounting
-XC20	Head cover axial port
-XC22	Fluororubber seal*1
-XC27	Double clevis and double knuckle joint pins made of stainless steel
-XC29	Double knuckle joint with spring pin
-XC35	With coil scraper
-XC85	Grease for food processing equipment

*1 Cylinders with rubber bumper have no bumper.
*2 Only compatible with cylinders with rubber bumper, but has no bumper.

Refer to pages 39 to 49 for cylinders with auto switches.

- Auto Switch Proper Mounting Position (Detection at stroke end) and Mounting Height
- Minimum Stroke for Auto Switch Mounting
- Auto Switch Mounting Brackets/Part Nos.
- Operating Range
- Cylinder Mounting Bracket, by Stroke/Auto Switch Mounting Surfaces

⚠ Precautions

Refer to pages 51 to 53 before handling.

Specifications

Bore size [mm]			20	25	32	40	50	63	80	100
Action			Double acting, Single rod							
Lubricant			Not required (Non-lube)							
Fluid			Air							
Proof pressure			1.5 MPa							
Maximum operating pressure			1.0 MPa							
Minimum operating pressure			0.05 MPa							
Ambient and fluid temperatures			Without auto switch: –10 °C to 70 °C With auto switch: –10 °C to 60 °C (No freezing)							
Piston speed			50 to 1000 mm/s						50 to 700 mm/s	
Stroke length tolerance*1			Up to 1000 $^{+1.4}_{0}$ mm, Up to 1500 $^{+1.8}_{0}$ mm							
Cushion			Rubber bumper, Air cushion							
Mounting*2			Basic (Without trunnion mounting female thread), Basic (With trunnion mounting female thread), Axial foot bracket, Rod flange, Head flange, Rod trunnion, Head trunnion, Clevis							
Allowable kinetic energy [J]	**Rubber bumper**	**Male rod end**	0.28	0.41	0.66	1.20	2.00	3.40	5.90	9.90
		Female rod end	0.11	0.18	0.29	0.52	0.91	1.54	2.71	4.54
	Air cushion	**Male rod end***3	R: 0.35 H: 0.42	R: 0.56 H: 0.65	0.91	1.80	3.40	4.90	11.80	16.70
		Female rod end	0.11	0.18	0.29	0.52	0.91	1.54	2.71	4.54

*1 Does not include the amount of bumper change
*2 Cylinder sizes Ø 80 and Ø 100 do not have basic (with trunnion mounting female thread), rod trunnion, and head trunnion types. Foot, flange, and clevis types of cylinder sizes from Ø 20 to Ø 63 do not have trunnion mounting female thread. Operate the cylinder within the allowable kinetic energy.
*3 R: Rod side, H: Head side
* For the allowable rod end lateral load, refer to the "Air Cylinders Model Selection" in the **catalogue on www.smc.eu**.

Accessories / For part numbers and dimensions ⇒ pp. 16, 17

Mounting		Basic	Axial foot bracket	Rod flange	Head flange	Rod trunnion	Head trunnion	Clevis
Standard	Rod end nut*3	●	●	●	●	●	●	●
	Clevis pin*3	—	—	—	—	—	—	●
Option	Single knuckle joint*3	●	●	●	●	●	●	●
	Double knuckle joint (with pin)*2, *3	●	●	●	●	●	●	●
	Rod end	●	●	●	●	●	●	●
	Pivot bracket*1	—	—	—	—	●*1	●*1	●
	Rod boot	●	●	●	●	●	●	●

*1 Not available for Ø 80 and Ø 100
*2 A double knuckle joint pin and retaining rings are shipped together with the product.
*3 Stainless steel mounting brackets and accessories are also available.
For details ⇒ p. 17

Standard Strokes

[mm]

Bore size	Standard stroke*1	Max. manufacturable stroke
20	25, 50, 75, 100, 125, 150, 200	1500
25, 32, 40, 50, 63, 80, 100	25, 50, 75, 100, 125, 150, 200, 250, 300	

*1 The manufacturing of intermediate strokes in 1 mm increments is possible. (Spacers are not used.)
* The overall length of products with long strokes (for Ø 20: 201 mm or more, for Ø 25 to Ø 100: 301 mm or more) varies from that of existing CG1-Z series products.
For the type that is interchangeable with the long stroke type of the same bore size (made to order: -X3252), refer to page 50.
* Applicable strokes should be confirmed according to the usage. For details, refer to the "Air Cylinders Model Selection" in the **catalogue on www.smc.eu**. In addition, the products that exceed the standard stroke might not be able to fulfill the specifications due to deflection, etc.
* Using a stroke of a length which is smaller than the effective cushion length may result in reduced air cushion performance. Refer to "Technical Data 1" in the **catalogue on www.smc.eu** for details on the effective cushion length.
* The min. stroke of the type with a magnet varies depending on the switch. For details, refer to pages 44 and 49.

Ordering Example of Cylinder Assembly

Cylinder model: CDG1DN20-100Z1-NW-M9BW

Mounting	**D: Clevis**
Pivot bracket	**N: Yes**
Rod end bracket	**W: Double knuckle joint**
Auto switch D-M9BW: 2 pcs.	

∗ Pivot bracket, double knuckle joint, and auto switch are shipped together with the product but do not come assembled.

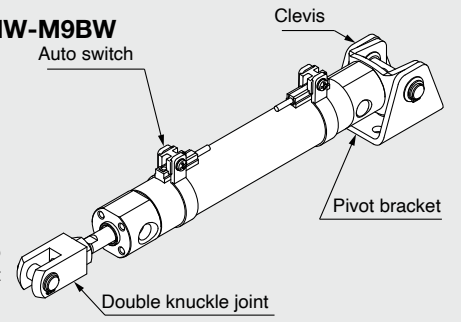

Mounting Brackets/Part Nos.

Mounting bracket	Order qty.	Bore size [mm]								Contents
		20	**25**	**32**	**40**	**50**	**63**	**80**	**100**	
Axial foot bracket	2∗1	CG-L020	CG-L025	CG-L032	CG-L040	CG-L050	CG-L063	CG-L080	CG-L100	2 foot brackets, 8 mounting bolts
Flange	1	CG-F020	CG-F025	CG-F032	CG-F040	CG-F050	CG-F063	CG-F080	CG-F100	1 flange, 4 mounting bolts
Trunnion pin	1	CG-T020	CG-T025	CG-T032	CG-T040	CG-T050	CG-T063	—	—	2 trunnion pins, 2 trunnion bolts, 2 flat washers
Clevis	1	CG-D020	CG-D025	CG-D032	CG-D040	CG-D050	CG-D063	CG-D080	CG-D100	1 clevis, 4 mounting bolts, 1 clevis pin, 2 retaining rings
Pivot bracket	1	CG-020-24A	CG-025-24A	CG-032-24A	CG-040-24A	CG-050-24A	CG-063-24A	CG-080-24A	CG-100-24A	1 pivot bracket

∗1 Order two foot brackets per cylinder.
∗ Stainless steel mounting brackets and accessories are also available. For details ⇒ p. 17

Mounting Brackets, Accessories/Material, Surface Treatment

Mounting Brackets

Description		Material	Surface treatment
Foot bracket		Carbon steel	Nickel plating
Flange		Carbon steel (Ø 20 to Ø 63)	Nickel plating
		Cast iron (Ø 80, Ø 100)	Nickel plating
Clevis		Carbon steel (Ø 20 to Ø 63)	Nickel plating
		Cast iron (Ø 80, Ø 100)	Nickel plating
Trunnion pin	Trunnion pin	Carbon steel	Salt-bath nitrocarburizing
	Trunnion bolt	Carbon steel	Nickel plating
	Flat washer	Carbon steel	Nickel plating

Accessories

Description	Material	Surface treatment
Rod end nut	Carbon steel	Zinc chromating
Single knuckle joint	Carbon steel (Ø 20 to Ø 32)	Nickel plating
	Cast iron (Ø 40 to Ø 100)	Zinc chromating
Double knuckle joint	Carbon steel (Ø 20 to Ø 32)	Nickel plating
	Cast iron (Ø 40 to Ø 100)	Zinc chromating
Rod end	Carbon steel	Zinc plating
Knuckle pin	Carbon steel	—
Clevis pin	Carbon steel	—
Pivot bracket	Carbon steel (Ø 20 to Ø 63)	Nickel plating
	Cast iron (Ø 80, Ø 100)	Nickel plating
Mounting bolt	Carbon steel	Nickel plating
Retaining ring	Carbon tool steel	Phosphate coating

Weight

[kg]

Bore size [mm]		**20**	**25**	**32**	**40**	**50**	**63**	**80**	**100**
Basic weight	Basic: Without trunnion mounting female thread (B)	0.11	0.17	0.25	0.45	0.80	1.09	2.07	3.16
	Basic: With trunnion mounting female thread (Z)	0.11	0.17	0.24	0.44	0.79	1.06	—	—
	Axial foot bracket	0.21	0.29	0.40	0.67	1.26	1.77	3.04	4.91
	Flange	0.18	0.26	0.38	0.65	1.16	1.64	2.78	4.44
	Trunnion	0.12	0.19	0.28	0.49	0.88	1.20	—	—
	Clevis	0.17	0.25	0.39	0.68	1.19	1.78	2.77	4.44
Pivot bracket		0.08	0.09	0.17	0.25	0.44	0.80	0.98	1.75
Single knuckle joint		0.05	0.09	0.09	0.10	0.22	0.22	0.39	0.57
Double knuckle joint (with pin)		0.05	0.09	0.09	0.13	0.26	0.26	0.64	1.31
Rod end		0.05	0.07	0.07	0.16	0.30	0.30	0.49	0.67
Additional weight per 50 mm of stroke		0.05	0.07	0.09	0.14	0.21	0.25	0.35	0.50
Additional weight for switch magnet		0.01	0.01	0.01	0.01	0.01	0.02	0.02	0.04
Weight reduction for female rod end		–0.01	–0.02	–0.02	–0.05	–0.10	–0.10	–0.19	–0.27

Calculation (Example): **CDG1FN20-100Z1**
(Built-in magnet, Flange, Ø 20, 100 mm stroke)

- Basic weight·····0.18 kg (Flange, Ø 20)
- Additional weight for stroke·····0.05 kg/50 mm
- Air cylinder stroke·····100 mm
- Additional weight for switch magnet·····0.01 kg

0.18 + 0.05 x (100/50) + 0.01 = **0.29 kg**

Clean Series

10-CG1 | Mounting type | Type (Cushion) | Bore size | – | Stroke | Rod end thread | **Z1**

Clean series (With relief port)

The type which is applicable for using inside the clean room graded ISO Class 4 by making an actuator's rod section a double seal construction and discharging by relief port directly to the outside of clean room.

For details about the clean series, refer to the **catalogue on www.smc.eu**.

Specifications

Bore size [mm]	20, 25, 32, 40, 50, 63, 80, 100
Action	Double acting
Fluid	Air
Maximum operating pressure	1.0 MPa
Minimum operating pressure	0.05 MPa
Cushion	Rubber bumper, Air cushion*1
Piston speed	30 to 400 mm/s
Relief port size	M5 x 0.8
Mounting*2	Basic, Axial foot bracket, Rod flange, Head flange

*1 Air cushion is only available for Ø 40 to Ø 63.
*2 The basic type is B type only. No trunnion mounting female thread is provided.
* Auto switch can be mounted.

Water Resistant

CDG1 | Mounting type | Type | Bore size | Port thread type | **R** | – | Stroke | Rod end thread | **Z1** – | Pivot bracket | Rod end bracket | – | Auto switch | – | ☐

–	Without magnet
D	Built-in magnet

Water resistant cylinder

R	NBR seals (Nitrile rubber)
V	FKM seals (Fluororubber)

Water resistant 2-colour indicator, solid state auto switch

M9□A(V)	Ø 32 to Ø 63
G5BAL	Ø 80, Ø 100

Made to order
XC6

⚠ Caution

Since the scraper is press-fit into the rod cover, it cannot be replaced.

Applicable for use in an environment with water splashing such as food processing and car wash equipment, etc.

Specifications

Bore size [mm]	32, 40, 50, 63, 80, 100
Action	Double acting, Single rod
Cushion	Rubber bumper/Air cushion
Auto switch mounting	Band mounting type
Made to order	XC6: Made of stainless steel

* Specifications other than above are the same as standard type.

Dimensions (Dimensions other than those shown below are the same as those of the standard type.)

With rubber bumper

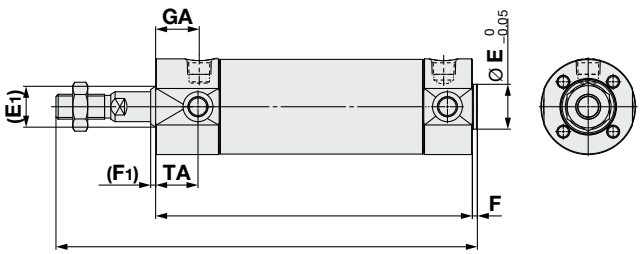

With air cushion

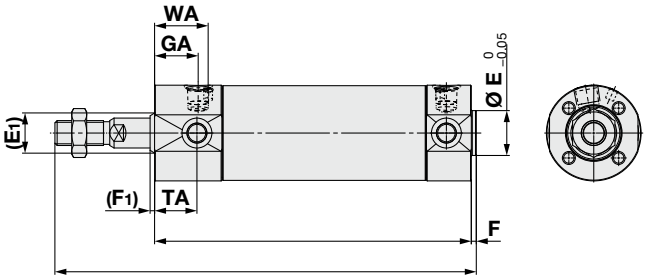

[mm]

Bore size	(E1)	E*	(F1)	F*	GA			S	TA	WA	ZZ	
					Rc	NPT	G				Male thread	Female thread
32	17	18	2	2	18		16.5	77	17	22	119	93
40	21	25	2	2	19		19	84	18	23	136	101
50	26	30	2	2	21		21	97	20	25	157	115
63	26	32	2	2	21		21	97	20	25	157	115
80	32	40	3	3	28		25.5	116	–	32	190	138
100	37	50	3	3	29		26.5	117	–	33	191	142

* Dimensions marked with an "*" are the same as the standard type.

For details, refer to the **catalogue on www.smc.eu**.

Replacement Parts

With rubber bumper

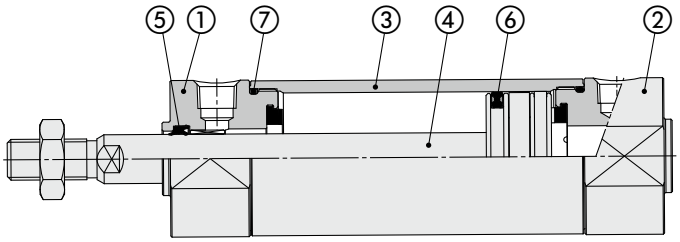

With air cushion

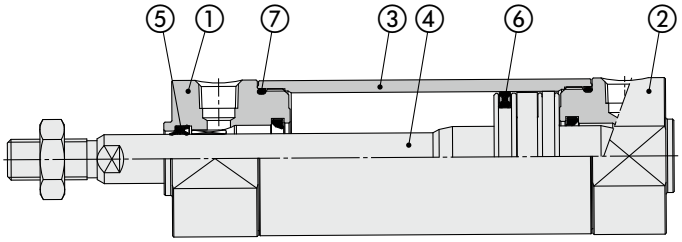

Component Parts

No.	Description
1	**Rod cover**
2	**Head cover**
3	**Cylinder tube**
4	**Piston rod**
5	**Rod seal**
6	**Piston seal**
7	**Tube gasket**

Replacement Parts: Seal Kit

Bore size [mm]	Kit no.	Contents
20	CG1N20Z-PS	Set of nos. ⑤, ⑥, ⑦
25	CG1N25Z-PS	
32	CG1N32Z-PS	
40	CG1N40Z-PS	

∗ As sizes Ø 50 and larger cannot be disassembled, the seal cannot be replaced.
∗ The seal kit includes a grease pack (10 g).
Order with the following part number when only the grease pack is needed.
Grease pack part number: GR-S-010 (10 g)

Dimensions: Basic

Without trunnion mounting female thread/C□G1B

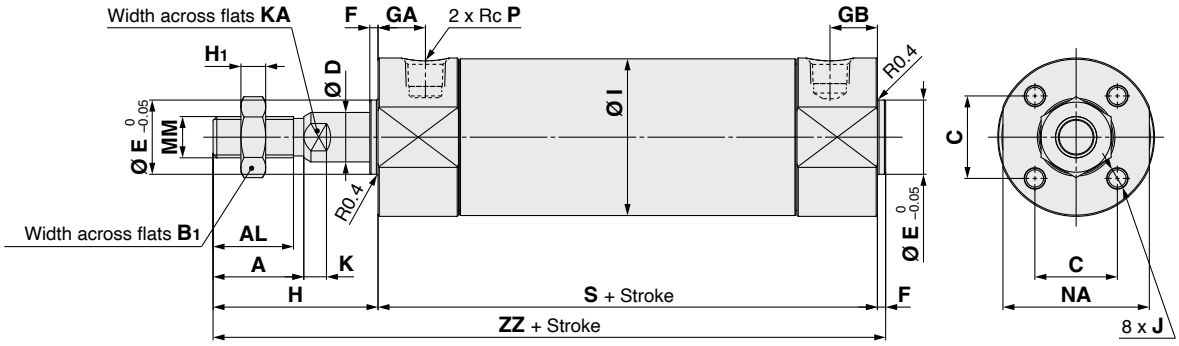

With trunnion mounting female thread/C□G1Z

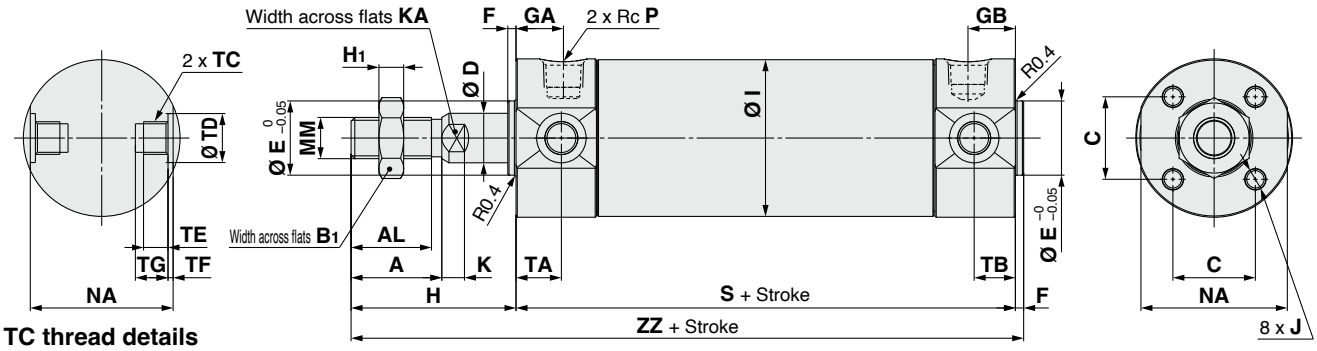

Female rod end

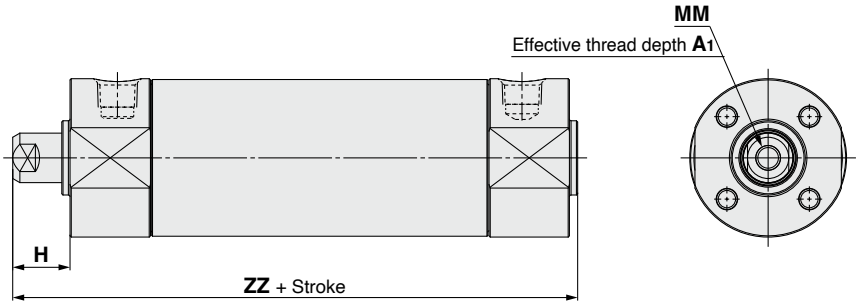

[mm]

Bore size	A	AL	B1	C	D	E	F	H	H1	I	J	K	KA	MM	NA	S	TA	TB	ZZ
20	18	15.5	13	14	8	12	2	35	5	26	M4 x 0.7 depth 7	5	6	M8 x 1.25	24	69	11	11	106
25	22	19.5	17	16.5	10	14	2	40	6	31	M5 x 0.8 depth 7.5	5.5	8	M10 x 1.25	29	69	11	11	111
32	22	19.5	17	20	12	18	2	40	6	38	M5 x 0.8 depth 8	5.5	10	M10 x 1.25	35.5	71	11	10	113
40	30	27	19	26	16	25	2	50	8	47	M6 x 1 depth 12	6	14	M14 x 1.5	44	78	12	10	130
50	35	32	27	32	20	30	2	58	11	58	M8 x 1.25 depth 16	7	18	M18 x 1.5	55	90	13	12	150
63	35	32	27	38	20	32	2	58	11	72	M10 x 1.5 depth 16	7	18	M18 x 1.5	69	90	13	12	150
80	40	37	32	50	25	40	3	71	13	89	M10 x 1.5 depth 22	10	22	M22 x 1.5	86	108	—	—	182
100	40	37	41	60	30	50	3	71	16	110	M12 x 1.75 depth 22	10	26	M26 x 1.5	106	108	—	—	182

[mm]

Bore size	Rc, NPT port			G port		
	GA	**GB**	**P**	**GA**	**GB**	**P**
20	11.5	11.5	1/8	11.5	11.5	M5 x 0.8
25	11.5	11.5	1/8	12	12	M5 x 0.8
32	11.5	11.5	1/8	10.5	10.5	1/8
40	13	13	1/8	13	13	1/8
50	14	14	1/4	14	14	1/4
63	14	14	1/4	14	14	1/4
80	20	16	3/8	20	16	3/8
100	16	16	1/2	16	16	1/2

Female Rod End

[mm]

Bore size	A1	H	MM	ZZ
20	8	13	M4 x 0.7	84
25	8	14	M5 x 0.8	85
32	12	14	M6 x 1	87
40	13	15	M8 x 1.25	95
50	18	16	M10 x 1.5	108
63	18	16	M10 x 1.5	108
80	21	19	M14 x 1.5	130
100	25	22	M16 x 1.5	133

TC Thread

[mm]

Bore size	TC	TD	TE	TF	TG
20	M5 x 0.8	$8^{+0.08}_{0}$	4	0.5	5.5
25	M6 x 0.75	$10^{+0.08}_{0}$	5	1	6.5
32	M8 x 1.0	$12^{+0.08}_{0}$	5.5	1	7.5
40	M10 x 1.25	$14^{+0.08}_{0}$	6	1.25	8.5
50	M12 x 1.25	$16^{+0.08}_{0}$	7.5	2	10
63	M14 x 1.5	$18^{+0.08}_{0}$	11.5	3	14.5
80	—	—	—	—	—
100	—	—	—	—	—

∗ Cylinder sizes Ø 80 and Ø 100 do not have trunnion mounting female thread on the width across flats NA.

Basic/CG1B

With air cushion

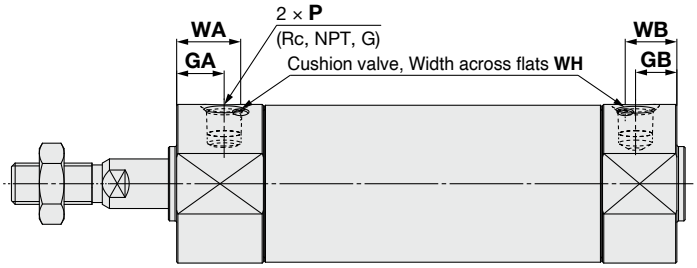

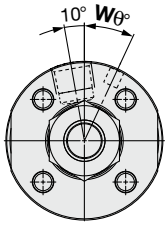

With Air Cushion [mm]

Bore size	GA			GB			P	WA	WB	WH	Wθ
	Rc	NPT	G	Rc	NPT	G	Rc, NPT, G				
20	11.5	—	—	8.5	—	—	M5 x 0.8	16	12	1.5	25°
25	12	—	—	10	—	—	M5 x 0.8	13.5	13.5	1.5	25°
32	11.5		10.5	10			1/8	15.5	12.5	1.5	25°
40	13			10			1/8	18	14	1.5	20°
50	14			12			1/4	18	17	3	20°
63	14			12			1/4	18	17	3	20°
80	20			16			3/8	24	20	4	20°
100	16			16			1/2	20	20	4	20°

With rod boot

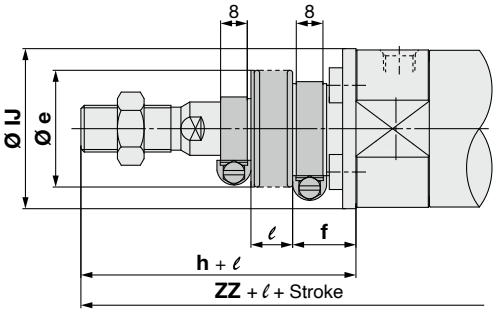

Ø 20 to Ø 63

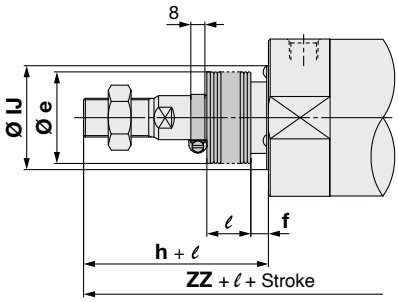

Ø 80, Ø 100

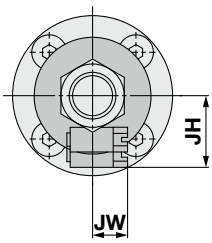

With Rod Boot [mm]

Bore size	e	f	h	IJ	JH (Reference)	JW (Reference)	ℓ	ZZ
20	30	18	55	27	15.5	10.5	1/4 stroke	126 (134)
25	30	19	62	32	16.5	10.5		133 (141)
32	35	19	62	38	18.5	10.5		135 (143)
40	35	19	70	48	21.5	10.5		150 (159)
50	40	19	78	59	24	10.5		170 (182)
63	40	20	78	72	24	10.5		170 (182)
80	52	10	80	59	–	–		191 (205)
100	62	7	80	71	–	–		191 (205)

∗ The minimum stroke with a rod boot is 20 mm.

Dimensions: Axial Foot Bracket

C□G1L

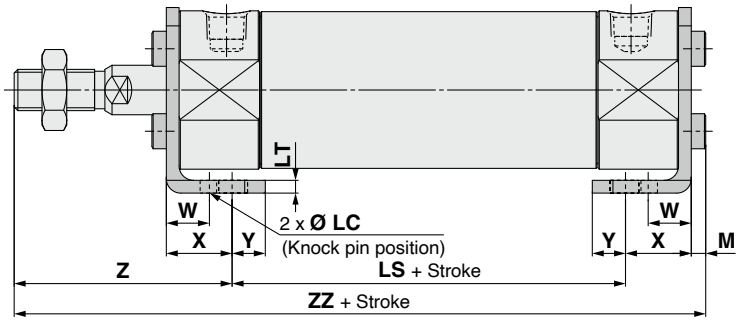

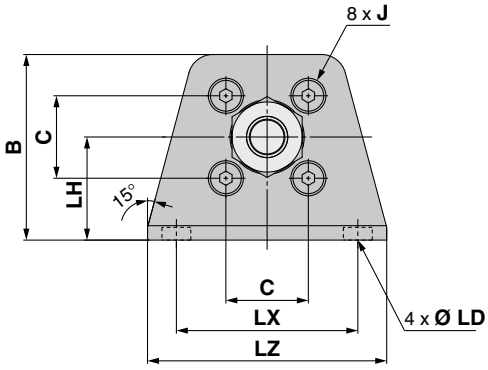

Female rod end

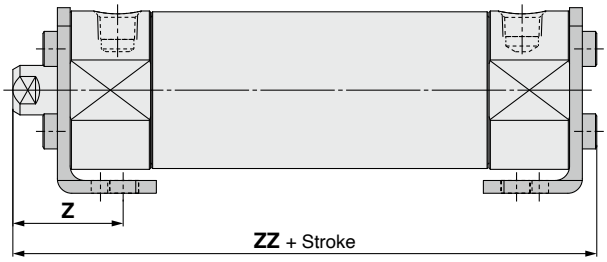

∗ Stainless steel mounting brackets and accessories are also available. For details ⇒ p. 17

[mm]

Bore size	B	C	J	LC	LD	LH	LS	LT	LX	LZ	M	W	X	Y	Z	ZZ
20	34	14	M4 x 0.7	4	6	20	45	3	32	44	3	10	15	7	47	110
25	38.5	16.5	M5 x 0.8	4	6	22	45	3	36	49	3.5	10	15	7	52	115.5
32	45	20	M5 x 0.8	4	7	25	45	3	44	58	3.5	10	16	8	53	117.5
40	54.5	26	M6 x 1	4	7	30	51	3	54	71	4	10	16.5	8.5	63.5	135
50	70.5	32	M8 x 1.25	5	10	40	55	4.5	66	86	5	17.5	22	11	75.5	157.5
63	82.5	38	M10 x 1.5	5	12	45	55	4.5	82	106	5	17.5	22	13	75.5	157.5
80	101	50	M10 x 1.5	6	11	55	60	4.5	100	125	5	20	28.5	14	95	188.5
100	121	60	M12 x 1.75	6	14	65	60	6	120	150	7	20	30	16	95	192

Female Rod End

[mm]

Bore size	Z	ZZ
20	25	88
25	26	89.5
32	27	91.5
40	28.5	100
50	33.5	115.5
63	33.5	115.5
80	43	136.5
100	46	143

Dimensions: Flange

Rod flange/C□G1F

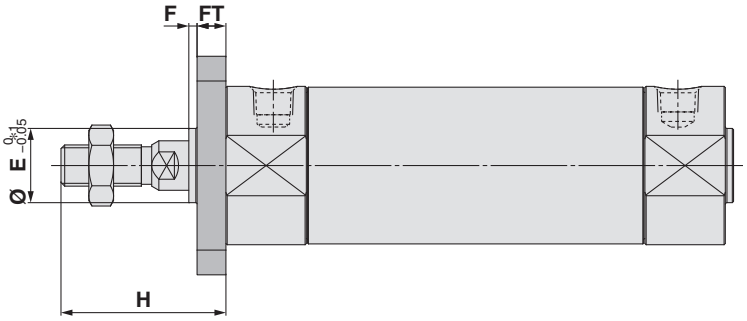

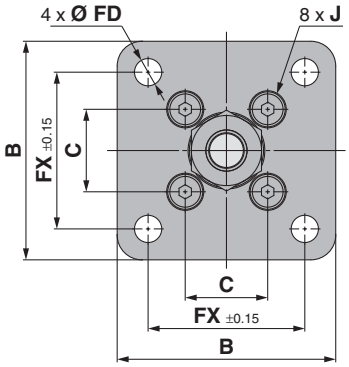

∗1 End boss is machined on the flange for Ø E.

Female rod end

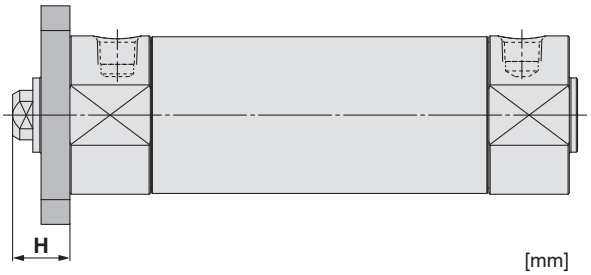

[mm]

Bore size	B	C	E	F	FD	FT	FX	H	J
20	40	14	12	2	5.5	6	28	35	M4 x 0.7
25	44	16.5	14	2	5.5	7	32	40	M5 x 0.8
32	53	20	18	2	6.6	7	38	40	M5 x 0.8
40	61	26	25	2	6.6	8	46	50	M6 x 1
50	76	32	30	2	9	9	58	58	M8 x 1.25
63	92	38	32	2	11	9	70	58	M10 x 1.5
80	104	50	40	3	11	11	82	71	M10 x 1.5
100	128	60	50	3	14	14	100	71	M12 x 1.75

Female Rod End [mm]

Bore size	H
20	13
25	14
32	14
40	15
50	16
63	16
80	19
100	22

Head flange/C□G1G

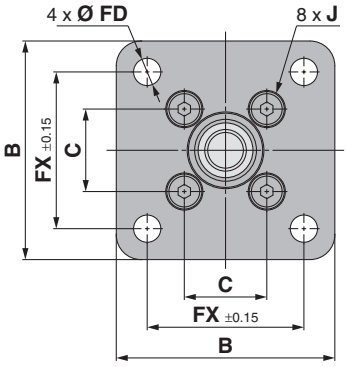

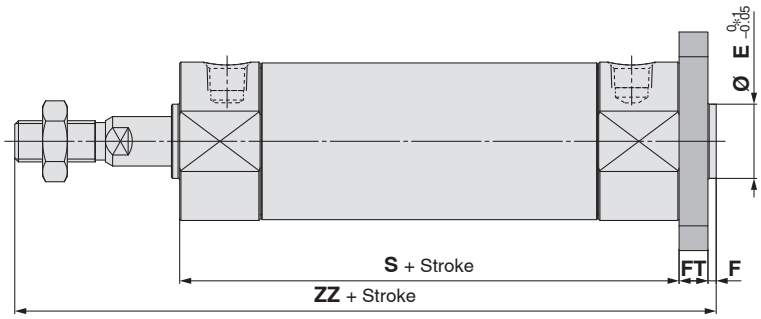

∗1 End boss is machined on the flange for Ø E.

Female rod end

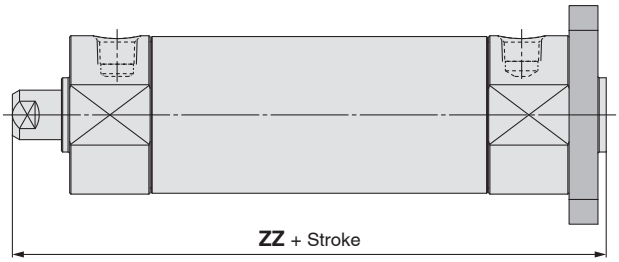

[mm]

Bore size	B	C	E	F	FD	FT	FX	J	S	ZZ
20	40	14	12	2	5.5	6	28	M4 x 0.7	69	112
25	44	16.5	14	2	5.5	7	32	M5 x 0.8	69	118
32	53	20	18	2	6.6	7	38	M5 x 0.8	71	120
40	61	26	25	2	6.6	8	46	M6 x 1	78	138
50	76	32	30	2	9	9	58	M8 x 1.25	90	159
63	92	38	32	2	11	9	70	M10 x 1.5	90	159
80	104	50	40	3	11	11	82	M10 x 1.5	108	193
100	128	60	50	3	14	14	100	M12 x 1.75	108	196

Female Rod End [mm]

Bore size	ZZ
20	90
25	92
32	94
40	103
50	117
63	117
80	141
100	147

Dimensions: Trunnion

Rod trunnion/C□G1U

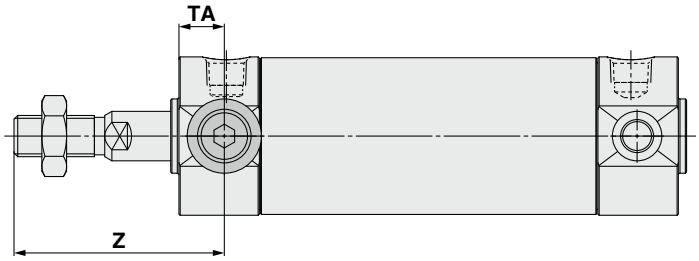

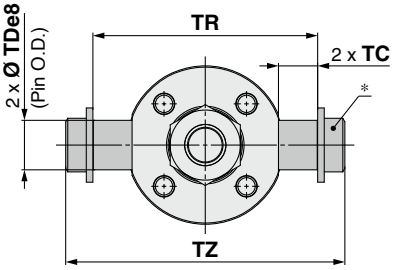

The part marked with an asterisk (*) is constructed of a trunnion pin, flat washer, and hexagon socket head cap screw.

Female rod end

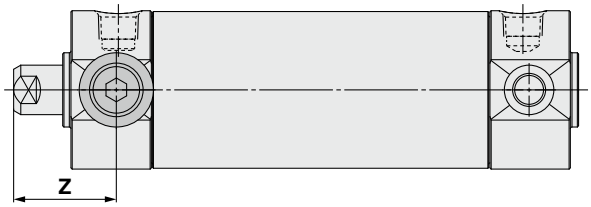

[mm]

Bore size	TA	TC	TDe8	TR	TZ	Z
20	11	7.5	$8^{-0.025}_{-0.047}$	39	47.6	46
25	11	7	$10^{-0.025}_{-0.047}$	43	53	51
32	11	9.5	$12^{-0.032}_{-0.059}$	54.5	67.7	51
40	12	10.5	$14^{-0.032}_{-0.059}$	65.5	78.7	62
50	13	12.5	$16^{-0.032}_{-0.059}$	80	98.6	71
63	13	14.5	$18^{-0.032}_{-0.059}$	98	119.2	71

Female Rod End [mm]

Bore size	Z
20	24
25	25
32	25
40	27
50	29
63	29

Head trunnion/C□G1T

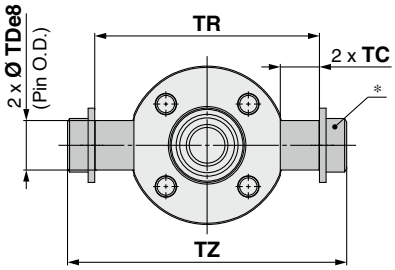

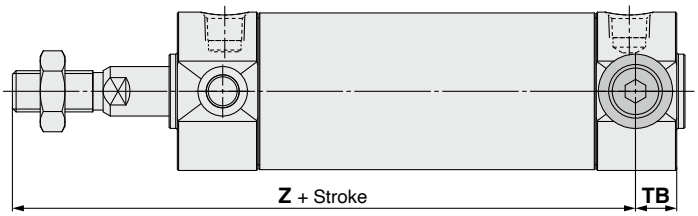

The part marked with an asterisk (*) is constructed of a trunnion pin, flat washer, and hexagon socket head cap screw.

Female rod end

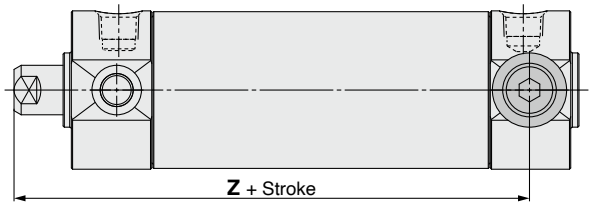

[mm]

Bore size	TB	TC	TDe8	TR	TZ	Z
20	11	7.5	$8^{-0.025}_{-0.047}$	39	47.6	93
25	11	7	$10^{-0.025}_{-0.047}$	43	53	98
32	10	9.5	$12^{-0.032}_{-0.059}$	54.5	67.7	101
40	10	10.5	$14^{-0.032}_{-0.059}$	65.5	78.7	118
50	12	12.5	$16^{-0.032}_{-0.059}$	80	98.6	136
63	12	14.5	$18^{-0.032}_{-0.059}$	98	119.2	136

Female Rod End [mm]

Bore size	Z
20	71
25	72
32	75
40	83
50	94
63	94

Dimensions: Clevis

C□G1D (∅ 20 to ∅ 63)

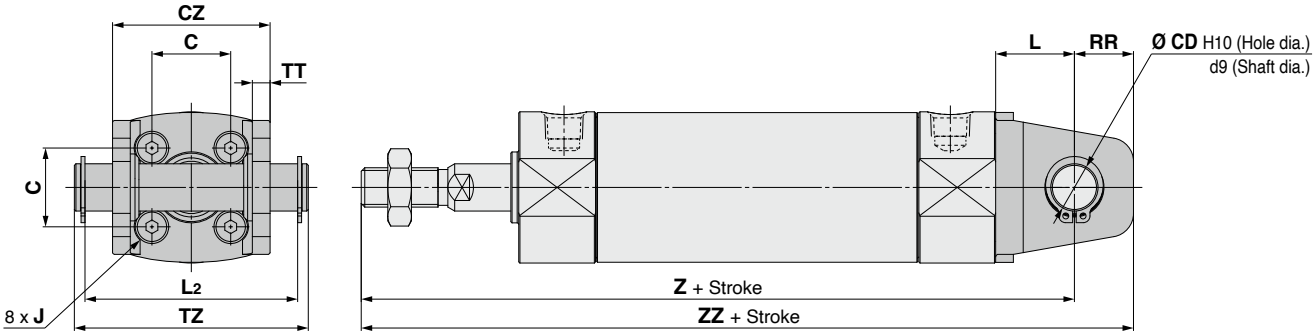

Female rod end

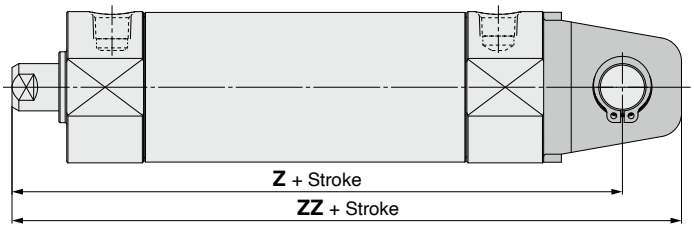

[mm]

Bore size	C	CD	CZ	J	L	L2	RR	TT	TZ	Z	ZZ
20	14	8	29	M4 x 0.7	14	38.6	11	3.2	43.4	118	129
25	16.5	10	33	M5 x 0.8	16	42.6	13	3.2	48	125	138
32	20	12	40	M5 x 0.8	20	54	15	4.5	59.4	131	146
40	26	14	49	M6 x 1	22	65	18	4.5	71.4	150	168
50	32	16	60	M8 x 1.25	25	79.6	20	6	86	173	193
63	38	18	74	M10 x 1.5	30	97.8	22	8	105.4	178	200

Female Rod End [mm]

Bore size	Z	ZZ
20	96	107
25	99	112
32	105	120
40	115	133
50	131	151
63	136	158

C□G1D (∅ 80, ∅ 100)

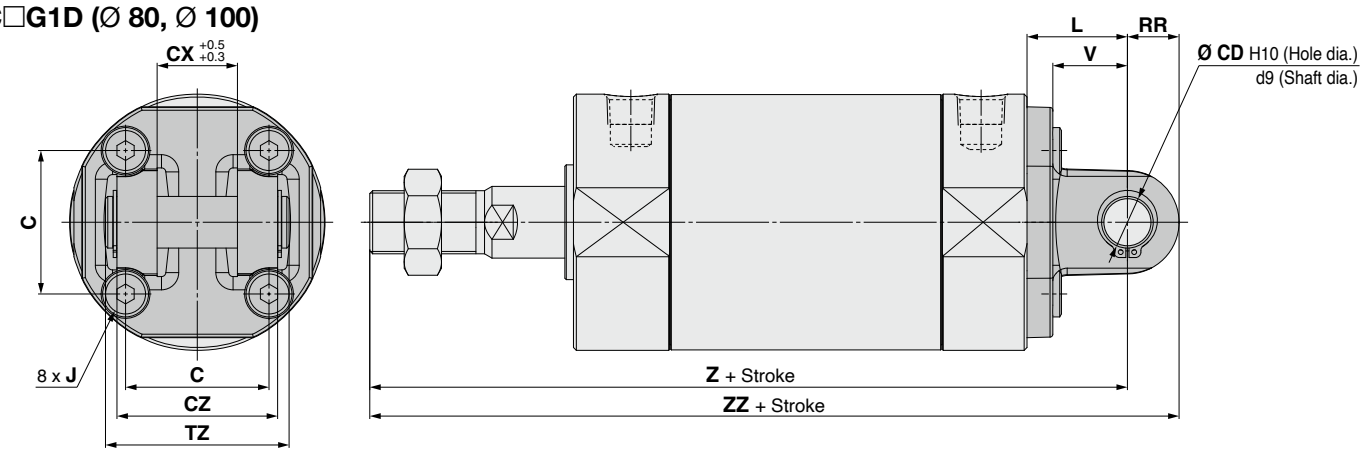

Female rod end

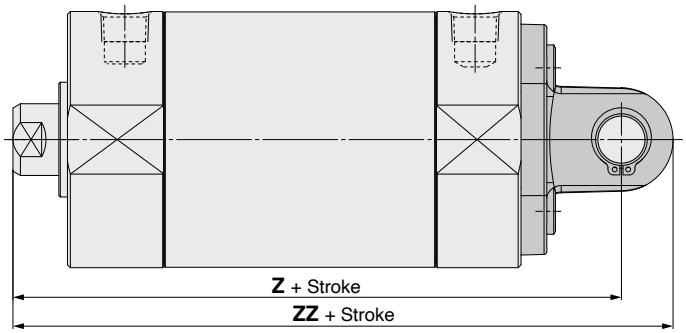

[mm]

Bore size	C	CD	CX	CZ	J	L	RR	TZ	V	Z	ZZ
80	50	18	28	56	M10 x 1.5	35	18	64	26	214	232
100	60	22	32	64	M12 x 1.75	43	22	72	32	222	244

Female Rod End [mm]

Bore size	Z	ZZ
80	162	180
100	173	195

With Pivot Bracket

Rod Trunnion (U) with Pivot Bracket

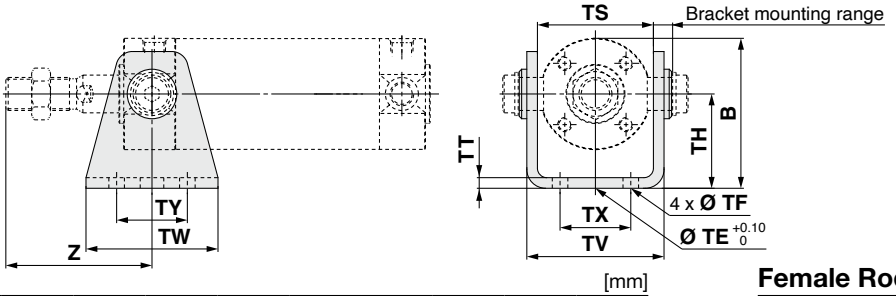

[mm]

Bore size	B	TE	TF	TH	TS	TT	TV	TW	TX	TY	Z
20	38	10	5.5	25	28	3.2	35.8	42	16	28	46
25	45.5	10	5.5	30	33	3.2	39.8	42	20	28	51
32	54	10	6.6	35	40	4.5	49.4	48	22	28	51
40	63.5	10	6.6	40	49	4.5	58.4	56	30	30	62
50	79	20	9	50	60	6	72.4	64	36	36	71
63	96	20	11	60	74	8	90.4	74	46	46	71

Female Rod End [mm]

Bore size	Z
20	24
25	25
32	25
40	27
50	29
63	29

Head Trunnion (T) with Pivot Bracket

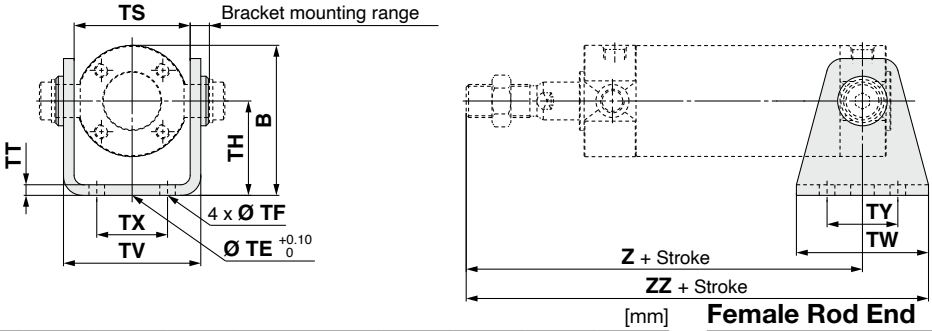

[mm]

Bore size	B	TE	TF	TH	TS	TT	TV	TW	TX	TY	Z	ZZ
20	38	10	5.5	25	28	3.2	35.8	42	16	28	93	114
25	45.5	10	5.5	30	33	3.2	39.8	42	20	28	98	119
32	54	10	6.6	35	40	4.5	49.4	48	22	28	101	125
40	63.5	10	6.6	40	49	4.5	58.4	56	30	30	118	146
50	79	20	9	50	60	6	72.4	64	36	36	136	168
63	96	20	11	60	74	8	90.4	74	46	46	136	173

Female Rod End [mm]

Bore size	Z	ZZ
20	71	92
25	72	93
32	75	99
40	83	111
50	94	126
63	94	131

Clevis (D) with Pivot Bracket Ø 20 to Ø 63

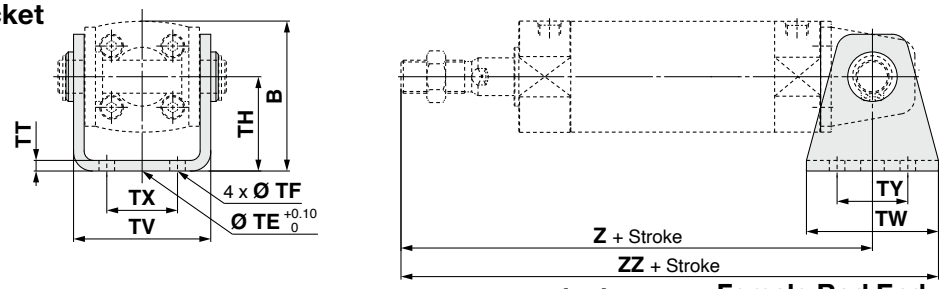

[mm]

Bore size	B	TE	TF	TH	TT	TV	TW	TX	TY	Z	ZZ
20	38	10	5.5	25	3.2	35.8	42	16	28	118	139
25	45.5	10	5.5	30	3.2	39.8	42	20	28	125	146
32	54	10	6.6	35	4.5	49.4	48	22	28	131	155
40	63.5	10	6.6	40	4.5	58.4	56	30	30	150	178
50	79	20	9	50	6	72.4	64	36	36	173	205
63	96	20	11	60	8	90.4	74	46	46	178	215

Female Rod End [mm]

Bore size	Z	ZZ
20	96	117
25	99	120
32	105	129
40	115	143
50	131	163
63	136	173

Clevis (D) with Pivot Bracket Ø 80, Ø 100

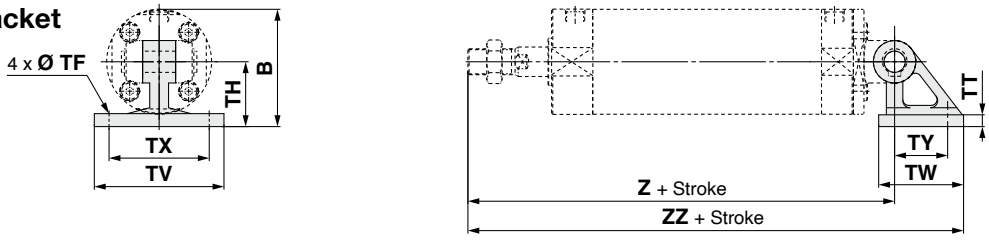

[mm]

Bore size	B	TF	TH	TT	TV	TW	TX	TY	Z	ZZ
80	99.5	11	55	11	110	72	85	45	214	272.5
100	120	13.5	65	12	130	93	100	60	222	298.5

Female Rod End [mm]

Bore size	Z	ZZ
80	162	220.5
100	173	249.5

Dimensions of Accessories

Single Knuckle Joint

I-G02, G03
Material: Carbon steel

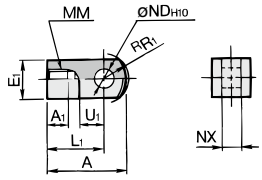

I-G04, G05, G08, G10
Material: Cast iron

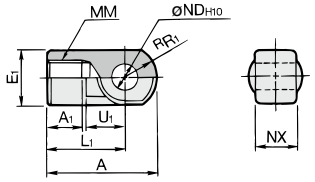

[mm]

Part no.	Applicable bore size [mm]	A	A_1	E_1	L_1	MM	R_1	U_1	ND_{H10}	NX
I-G02	20	34	8.5	□16	25	M8 x 1.25	10.3	11.5	$8^{+0.058}_{0}$	$8^{-0.2}_{-0.4}$
I-G03	25, 32	41	10.5	□20	30	M10 x 1.25	12.8	14	$10^{+0.058}_{0}$	$10^{-0.2}_{-0.4}$
I-G04	40	42	14	Ø 22	30	M14 x 1.5	12	14	$10^{+0.058}_{0}$	$18^{-0.3}_{-0.5}$
I-G05	50, 63	56	18	Ø 28	40	M18 x 1.5	16	20	$14^{+0.070}_{0}$	$22^{-0.3}_{-0.5}$
I-G08	80	71	21	Ø 38	50	M22 x 1.5	21	27	$18^{+0.070}_{0}$	$28^{-0.3}_{-0.5}$
I-G10	100	79	21	Ø 44	55	M26 x 1.5	24	31	$22^{+0.084}_{0}$	$32^{-0.3}_{-0.5}$

Knuckle Pin

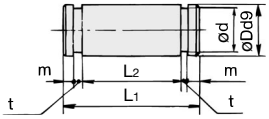

Material: Carbon steel [mm]

Part no.	Applicable bore size [mm]	Dd_9	L_1	d	L_2	m	t	Included retaining ring
IY-G02	20	$8^{-0.040}_{-0.076}$	21	7.6	16.2	1.5	0.9	Type C8 for axis
IY-G03	25, 32	$10^{-0.040}_{-0.076}$	25.6	9.6	20.2	1.55	1.15	Type C10 for axis
IY-G04	40	$10^{-0.040}_{-0.076}$	41.6	9.6	36.2	1.55	1.15	Type C10 for axis
IY-G05	50, 63	$14^{-0.050}_{-0.093}$	50.6	13.4	44.2	2.05	1.15	Type C14 for axis
IY-G08	80	$18^{-0.050}_{-0.093}$	64	17	56.2	2.55	1.35	Type C18 for axis
IY-G10	100	$22^{-0.065}_{-0.117}$	72	21	64.2	2.55	1.35	Type C22 for axis

∗ Retaining rings are included.

Clevis Pin

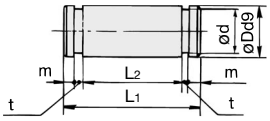

Material: Carbon steel [mm]

Part no.	Applicable bore size [mm]	Dd_9	L_1	d	L_2	m	t	Included retaining ring
CD-G02	20	$8^{-0.040}_{-0.076}$	43.4	7.6	38.6	1.5	0.9	Type C8 for axis
CD-G25	25	$10^{-0.040}_{-0.076}$	48	9.6	42.6	1.55	1.15	Type C10 for axis
CD-G03	32	$12^{-0.050}_{-0.093}$	59.4	11.5	54	1.55	1.15	Type C12 for axis
CD-G04	40	$14^{-0.050}_{-0.093}$	71.4	13.4	65	2.05	1.15	Type C14 for axis
CD-G05	50	$16^{-0.050}_{-0.093}$	86	15.2	79.6	2.05	1.15	Type C16 for axis
CD-G06	63	$18^{-0.050}_{-0.093}$	105.4	17	97.8	2.45	1.35	Type C18 for axis

∗ Retaining rings are included.
∗ A clevis pin and a knuckle pin are common for bore sizes Ø 80 and Ø 100.

Double Knuckle Joint

Y-G02, G03
Material: Carbon steel

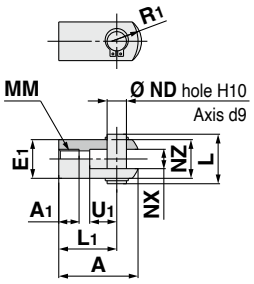

Y-G04, G05, G08, G10
Material: Cast iron

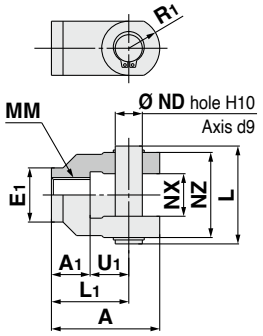

[mm]

Part no.	Applicable bore size [mm]	A	A_1	E_1	L_1	MM	R_1	U_1	ND	NX	NZ	L	Applicable pin part no.
Y-G02	20	34	8.5	□16	25	M8 x 1.25	10.3	11.5	8	$8^{+0.4}_{+0.2}$	16	21	IY-G02
Y-G03	25, 32	41	10.5	□20	30	M10 x 1.25	12.8	14	10	$10^{+0.4}_{+0.2}$	20	25.6	IY-G03
Y-G04	40	42	16	Ø 22	30	M14 x 1.5	12	14	10	$18^{+0.5}_{+0.3}$	36	41.6	IY-G04
Y-G05	50, 63	56	20	Ø 28	40	M18 x 1.5	16	20	14	$22^{+0.5}_{+0.3}$	44	50.6	IY-G05
Y-G08	80	71	23	Ø 38	50	M22 x 1.5	21	27	18	$28^{+0.5}_{+0.3}$	56	64	IY-G08
Y-G10	100	79	24	Ø 44	55	M26 x 1.5	24	31	22	$32^{+0.5}_{+0.3}$	64	72	IY-G10

∗ A knuckle pin and retaining rings are included.

Rod End Nut

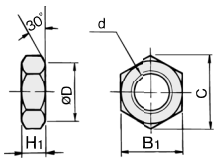

Material: Carbon steel [mm]

Part no.	Applicable bore size [mm]	d	H_1	B_1	C	D
NT-02	20	M8 x 1.25	5	13	(15)	12.5
NT-03	25, 32	M10 x 1.25	6	17	(19.6)	16.5
NT-G04	40	M14 x 1.5	8	19	(21.9)	18
NT-05	50, 63	M18 x 1.5	11	27	(31.2)	26
NT-08	80	M22 x 1.5	13	32	(37.0)	31
NT-10	100	M26 x 1.5	16	41	(47.3)	39

∗ Stainless steel mounting brackets and accessories are also available. For details ⇒ p. 17

Rod End

KJ□D
Material: Carbon steel

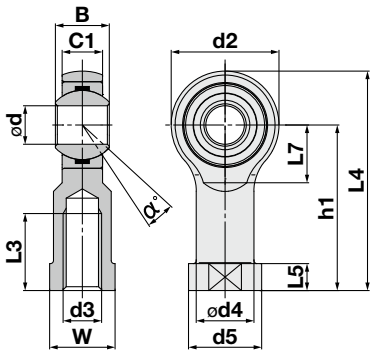

[mm]

Model	Applicable bore size [mm]	d_{H7}	d3	$B^{+0}_{-0.12}$	C1	d2	d4	d5	h1	$L3_{min}$	L4	L5	L7	W	α°	Allowable radial static load [KN]	Weight [kg]
KJ8D	20	8	M8 x 1.25	12	9	24	12.5	16	36	16	48	5	13	14	14	12	0.05
KJ10D	25, 32	10	M10 x 1.25	14	10.5	28	15	19	43	20	57	6.5	15	17	13	14	0.07
KJ14D	40	14	M14 x 1.5	19	13.5	36	20	25	57	25	75	8	19	22	15	36	0.16
KJ18D	50, 63	18	M18 x 1.5	23	16.5	46	25	31	71	32	94	10	25	27	15	51	0.30
KJ22D	80	22	M22 x 1.5	28	20	54	30	37	84	37	111	12	29	32	15	75	0.49
KJ26D	100	25	M26 x 1.5	31	22	60	33.5	42	94	48	124	12	32	36	15	85	0.67

· The allowable radial load shows the allowable value of a single rod end. When the rod end is used for connecting to a cylinder, the allowable radial load conforms to the cylinder specifications.

Material Stainless Steel Mounting Brackets, Rod End Brackets/Part Nos.

Bore size [mm]	Foot bracket	Flange	Single knuckle joint	Double knuckle joint*1	Knuckle joint pin*1	Rod end nut
20	–	–	**I-G02SUS**	**Y-G02SUS**	**IY-G02SUS**	**NT-02SUS**
25	–	–	**I-G03SUS**	**Y-G03SUS**	**IY-G03SUS**	**NT-03SUS**
32	**CG-L032SUS**	**CG-F032SUS**				
40	**CG-L040SUS**	**CG-F040SUS**	**I-G04SUS**	**Y-G04SUS**	**IY-G04SUS**	**NT-G04SUS**
50	**CG-L050SUS**	**CG-F050SUS**	**I-G05SUS**	**Y-G05SUS**	**IY-G05SUS**	**NT-05SUS**
63	**CG-L063SUS**	**CG-F063SUS**				
80	**CG-L080SUS**	**CG-F080SUS**	**I-G08SUS**	**Y-G08SUS**	**IY-G08SUS**	**NT-08SUS**
100	**CG-L100SUS**	**CG-F100SUS**	**I-G10SUS**	**Y-G10SUS**	**IY-G10SUS**	**NT-10SUS**

*1 A knuckle pin and retaining rings are included with the double knuckle joint. Retaining rings are included with the knuckle joint pin.

Dimensions

The single knuckle joint, double knuckle joint, knuckle pin, and rod end nut are the same as the standard type.

Foot bracket

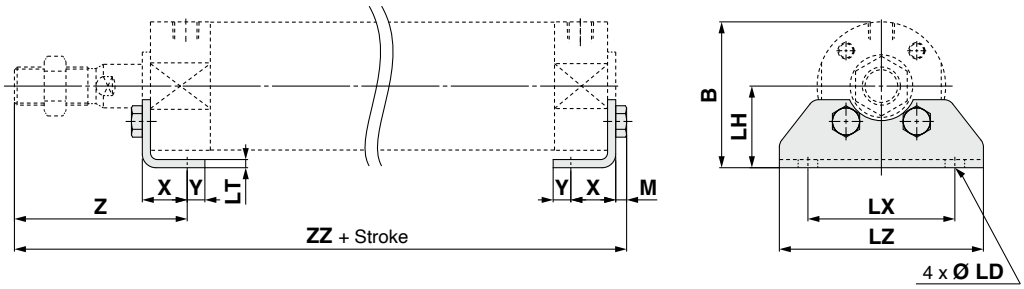

[mm]

Bore size	B	LD	LH	LT	LX	LZ	M	X	Y	Z	ZZ
32	44	7.2	[25]	[3]	[44]	60	[3.5]	[16]	6	[53]	[117.5]
40	53.5	7.2	[30]	[3]	[54]	75	[4]	[16.5]	6.5	[63.5]	[135]
50	69	[10]	[40]	4	[66]	90	5.5	21.5	11.5	[75.5]	[157.5]
63	81	[12]	[45]	4	[82]	110	7	21.5	11.5	[75.5]	159
80	99.5	12	[55]	4	[100]	130	7	28	17	[95]	190
100	125	[14]	[70]	[6]	[120]	160	8	[30]	15	[95]	193

* [ ]: Same as the standard type
* Supplied with 4 mounting screws

Air Cylinder: Standard Type
Single Acting, Spring Return/Extend

CG1 Series

Ø 20, Ø 25, Ø 32, Ø 40

RoHS

How to Order

CG1 B N 20 □ – 100 S □ Z1 – □ □ – □

With auto switch CDG1 B N 20 □ – 100 S □ Z1 – □ □ – M9BW □ – □

With auto switch (Built-in magnet) ●

❶ ❷ ❸ ❹ ❺ ❻ ❼ ❽ ❾ ❿ ⓫

❶ Mounting

B	Basic (Without trunnion mounting female thread)
Z	Basic (With trunnion mounting female thread)
L	Axial foot bracket
F	Rod flange
G	Head flange
U	Rod trunnion
T	Head trunnion
D	Clevis

∗ Mounting brackets are shipped together with the product but do not come assembled.
∗ The cylinder for L, F, G, and D mounting types is B: Basic (Without trunnion mounting female thread).

The presence of the trunnion mounting female thread (B, Z) is different from the existing product. Choose Z (with trunnion mounting female thread) when mounting the trunnion afterward.

❷ Bore size

20	20 mm
25	25 mm
32	32 mm
40	40 mm

❻ Rod end thread

—	Male rod end
F	Female rod end

❾ Auto switch

—	Without auto switch

∗ For applicable auto switches, refer to the table below.

⓫ Made to order

For details ⇒ p. 19

❸ Port thread type

Rubber bumper

—	Rc	Ø 20 to Ø 40
TN	NPT	Ø 20 to Ø 40
TF	M5 x 0.8	Ø 20, Ø 25
	G	Ø 32 to Ø 40

❼ Pivot bracket

—	No bracket
N	Pivot bracket

∗ Only for D, U, and T mounting types
∗ The pivot bracket is shipped together with the product but does not come assembled.

❿ Number of auto switches

—	2
S	1
n	n

❹ Cylinder stroke [mm]

For standard strokes ⇒ p. 19

❺ Action

S	Single acting, Spring return
T	Single acting, Spring extend

❽ Rod end bracket

—	No bracket
V	Single knuckle joint
W	Double knuckle joint
Q	Rod end

∗ No bracket is provided for the female rod end.
∗ The rod end bracket is shipped together with the product but does not come assembled.
∗ A knuckle joint pin is not provided with the single knuckle joint.

∗ For the ordering example of cylinder assembly, refer to page 20.

Applicable Auto Switches / Refer to the **catalogue on www.smc.eu** for further information on auto switches.

Type	Special function	Electrical entry	Indicator light	Wiring (Output)	Load voltage DC		Load voltage AC	Auto switch model (Applicable bore size Ø 20 to Ø 40) Perpendicular	In-line	Lead wire length [m] 0.5 (—)	1 (M)	3 (L)	5 (Z)	Pre-wired connector	Applicable load	
Solid state auto switch	——	Grommet	Yes	3-wire (NPN)	24 V	5 V, 12 V	—	M9NV	M9N	●	●	●	○	○	IC circuit	Relay, PLC
				3-wire (PNP)				M9PV	M9P	●	●	●	○	○		
				2-wire		12 V		M9BV	M9B	●	●	●	○	○	—	
	Diagnostic indication (2-colour indicator)	Grommet		3-wire (NPN)		5 V, 12 V		M9NWV	M9NW	●	●	●	○	○	IC circuit	
				3-wire (PNP)				M9PWV	M9PW	●	●	●	○	○		
				2-wire		12 V		M9BWV	M9BW	●	●	●	○	○	—	
	Water resistant (2-colour indicator)			3-wire (NPN)		5 V, 12 V		M9NAV∗1	M9NA∗1	○	○	●	○	○	IC circuit	
				3-wire (PNP)				M9PAV∗1	M9PA∗1	○	○	●	○	○		
				2-wire		12 V		M9BAV∗1	M9BA∗1	○	○	●	○	○	—	
Reed auto switch	——	Grommet	Yes	3-wire (NPN equivalent)	—	5 V	—	A96V	A96	●	●	●	●	○	IC circuit	—
			No	2-wire	24 V	12 V	100 V	A93V	A93	●	●	●	●	○∗2	—	Relay, PLC
							100 V or less	A90V	A90	●	●	●	●	○∗2	IC circuit	

∗1 Water-resistant type auto switches can be mounted on the above models, but SMC cannot guarantee water resistance.
A water-resistant type cylinder is recommended for use in an environment which requires water resistance.
∗2 The load voltage used is 24 VDC.
∗ Lead wire length symbols: 0.5 m····· — (Example) M9NW
1 m····· M (Example) M9NWM
3 m····· L (Example) M9NWL
5 m····· Z (Example) M9NWZ

∗ Auto switches marked with a "○" are produced upon receipt of order.

∗ There are applicable auto switches other than those listed above. For details ⇒ p. 47
∗ For details on auto switches with pre-wired connectors ⇒ Refer to the **catalogue on www.smc.eu**.
∗ The D-A9□□/M9□□□ auto switches are shipped together with the product but do not come assembled. (Only the auto switch mounting brackets are assembled before shipment.)

Spring return

Spring extend

Symbol

Spring return, Rubber bumper

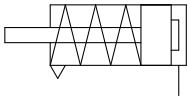

Spring extend, Rubber bumper

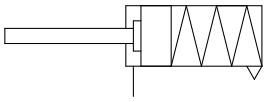

Made to Order Common Specifications (For details, refer to the catalogue on www.smc.eu.)

Symbol	Specifications
-XC6	Made of stainless steel

Refer to pages 39 to 49 for cylinders with auto switches.

- Auto Switch Proper Mounting Position (Detection at stroke end) and Mounting Height
- Minimum Stroke for Auto Switch Mounting
- Auto Switch Mounting Brackets/Part Nos.
- Operating Range
- Cylinder Mounting Bracket, by Stroke/Auto Switch Mounting Surfaces

⚠ Precautions

Refer to pages 51 to 53 before handling.

Specifications

Bore size [mm]	20	25	32	40	20	25	32	40
Action	Single acting, Spring return				Single acting, Spring extend			
Lubricant	Not required (Non-lube)							
Fluid	Air							
Proof pressure	1.5 MPa							
Maximum operating pressure	1.0 MPa							
Minimum operating pressure	0.18 MPa				0.23 MPa			
Ambient and fluid temperatures	Without auto switch: –10 °C to 70 °C With auto switch: –10 °C to 60 °C (No freezing)							
Piston speed	50 to 1000 mm/s							
Stroke length tolerance	Up to 200 $^{+1.4}_{0}$ mm							
Cushion	Rubber bumper							
Mounting	Basic, Basic (without trunnion mounting female thread), Axial foot bracket, Rod flange, Head flange, Rod trunnion, Head trunnion, Clevis							

Accessories / Refer to page 16 for part numbers and dimensions.

Mounting		Basic	Axial foot bracket	Rod flange	Head flange	Rod trunnion	Head trunnion	Clevis
Standard	Rod end nut	●	●	●	●	●	●	●
	Clevis pin	–	–	–	–	–	–	●
Option	Single knuckle joint	●	●	●	●	●	●	●
	Double knuckle joint*1 (with pin)	●	●	●	●	●	●	●
	Pivot bracket	–	–	–	–	●	●	●

*1 A double knuckle joint pin and retaining rings are shipped together.
* Stainless steel mounting brackets and accessories are also available. Refer to page 17 for details.

Standard Strokes

[mm]

Bore size	Standard stroke*1
20	25, 50, 75, 100, 125
25, 32, 40	25, 50, 75, 100, 125, 150, 200

*1 The manufacturing of intermediate strokes in 1 mm increments is possible. (Spacers are not used.)
* Applicable strokes should be confirmed according to the usage. For details, refer to the "Air Cylinders Model Selection" in the **catalogue on www.smc.eu**. In addition, the products that exceed the standard stroke might not be able to fulfill the specifications due to deflection, etc.
* The min. stroke of the type with a magnet varies depending on the switch. For details, refer to pages 44 and 49.

Theoretical Output

Refer to the **catalogue on www.smc.eu**.

Spring Reaction Force

Refer to the **catalogue on www.smc.eu**.

Mounting Brackets/Part Nos.

Mounting bracket	Order qty.	Bore size [mm] 20	25	32	40	Contents
Axial foot bracket	2*1	CG-L020	CG-L025	CG-L032	CG-L040	2 foot brackets, 8 mounting bolts
Flange	1	CG-F020	CG-F025	CG-F032	CG-F040	1 flange, 4 mounting bolts
Trunnion pin	1	CG-T020	CG-T025	CG-T032	CG-T040	2 trunnion pins, 2 trunnion bolts, 2 flat washers
Clevis	1	CG-D020	CG-D025	CG-D032	CG-D040	1 clevis, 4 mounting bolts, 1 clevis pin, 2 retaining rings
Pivot bracket	1	CG-020-24A	CG-025-24A	CG-032-24A	CG-040-24A	1 pivot bracket

*1 Order two foot brackets per cylinder.

Ordering Example of Cylinder Assembly

Cylinder model: CDG1DN20-100SZ1-NW-M9BW

Mounting	**D: Clevis**
Pivot bracket	**N: Yes**
Rod end bracket	**W: Double knuckle joint**
Auto switch D-M9BW: 2 pcs.	

∗ Pivot bracket, double knuckle joint, and auto switch are shipped together with the product but do not come assembled.

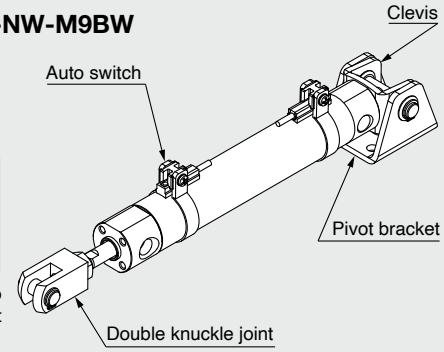

Weight

Spring return [kg]

Bore size [mm]		20	25	32	40
Basic weight	25 stroke	0.17	0.27	0.40	0.63
	50 stroke	0.19	0.30	0.45	0.71
	75 stroke	0.26	0.40	0.58	0.91
	100 stroke	0.28	0.43	0.62	0.99
	125 stroke	0.35	0.53	0.76	1.20
	150 stroke	—	0.56	0.81	1.28
	200 stroke	—	0.69	0.98	1.56
Mounting bracket weight	Axial foot bracket	0.11	0.13	0.16	0.22
	Flange	0.08	0.10	0.14	0.20
	Trunnion	0.01	0.02	0.03	0.05
	Clevis	0.05	0.08	0.15	0.23
Accessories	Pivot bracket	0.08	0.09	0.17	0.25
	Single knuckle joint	0.05	0.09	0.09	0.10
	Double knuckle joint (with pin)	0.05	0.09	0.09	0.13
Weight reduction for female rod end		−0.01	−0.02	−0.02	−0.05

Calculation (Example) **CG1LN20-100SZ1**
(Foot bracket, Ø 20, 100 mm stroke)
- Basic weight ····· 0.28 kg (Ø 20)
- Mounting bracket weight ··· 0.11 kg (Foot bracket)

0.28 + 0.11 = **0.39 kg**

Spring extend [kg]

Bore size [mm]		20	25	32	40
Basic weight	25 stroke	0.16	0.25	0.38	0.59
	50 stroke	0.18	0.28	0.43	0.67
	75 stroke	0.24	0.37	0.54	0.83
	100 stroke	0.26	0.40	0.58	0.91
	125 stroke	0.32	0.48	0.69	1.08
	150 stroke	—	0.50	0.72	1.12
	200 stroke	—	0.63	0.89	1.40
Mounting bracket weight	Axial foot bracket	0.11	0.13	0.16	0.22
	Flange	0.08	0.10	0.14	0.20
	Trunnion	0.01	0.02	0.03	0.05
	Clevis	0.05	0.08	0.15	0.23
Accessories	Pivot bracket	0.08	0.09	0.17	0.25
	Single knuckle joint	0.05	0.09	0.09	0.10
	Double knuckle joint (with pin)	0.05	0.09	0.09	0.13
Weight reduction for female rod end		−0.01	−0.02	−0.02	−0.05

Calculation (Example) **CG1LN20-100TZ1**
(Foot bracket, Ø 20, 100 mm stroke)
- Basic weight ····· 0.26 kg (Ø 20)
- Mounting bracket weight ··· 0.11 kg (Foot bracket)

0.26 + 0.11 = **0.37 kg**

Replacement Parts

Spring return

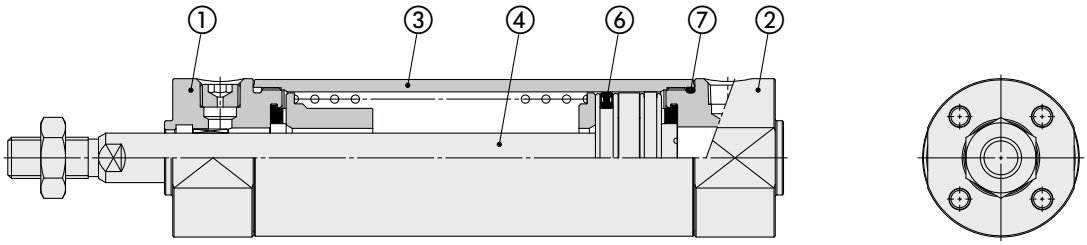

Spring extend

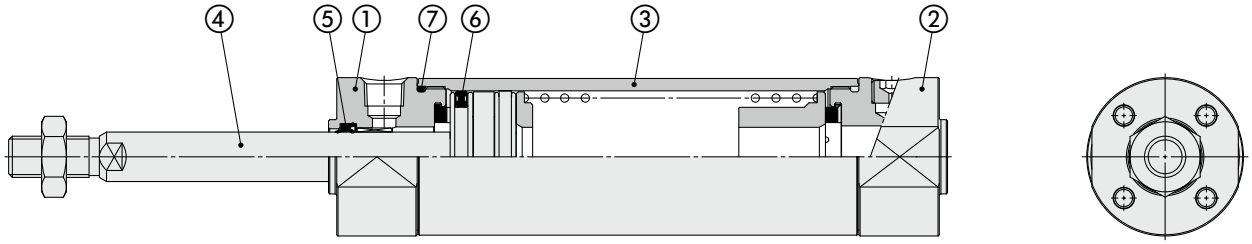

Component Parts

No.	Description
1	**Rod cover**
2	**Head cover**
3	**Cylinder tube**
4	**Piston rod**
5	**Rod seal**
6	**Piston seal**
7	**Tube gasket**

Spring return

Bore size [mm]	Kit no.	Contents
20	CG1N20Z1-S-PS	Set of nos. ⑥ and ⑦
25	CG1N25Z1-S-PS	
32	CG1N32Z1-S-PS	
40	CG1N40Z1-S-PS	

∗ The seal kit includes a grease pack (10 g).
Order with the following part number when only the grease pack is needed.
Grease pack part number: GR-S-010 (10 g)

Spring extend

Bore size [mm]	Kit no.	Contents
20	CG1N20Z-PS	Set of nos. ⑤, ⑥, ⑦
25	CG1N25Z-PS	
32	CG1N32Z-PS	
40	CG1N40Z-PS	

∗ The seal kit includes a grease pack (10 g).
Order with the following part number when only the grease pack is needed.
Grease pack part number: GR-S-010 (10 g)

Basic

∗ The figures below show mounting type "Z" (basic with trunnion mounting female thread).
Mounting type "B" (basic without trunnion mounting female thread) does not have trunnion mounting holes ("TC" dimension) on the cover.

Spring return/CG1□N-S

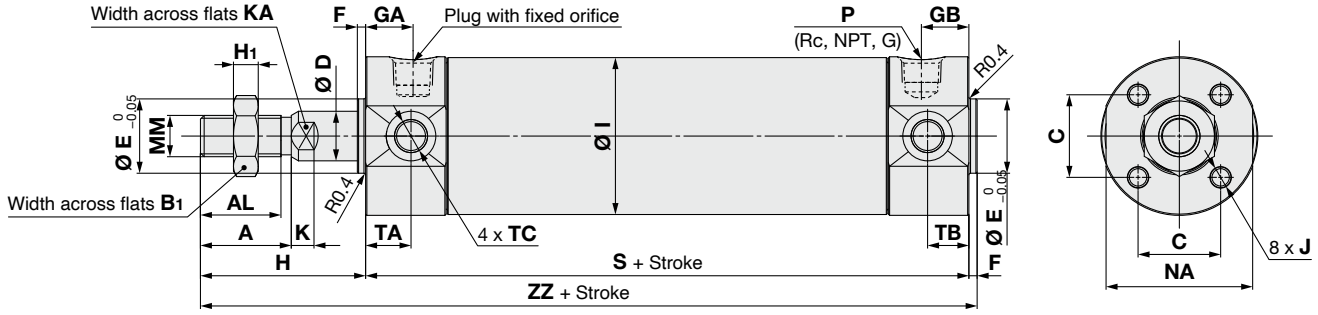

Spring extend/CG1□N-T

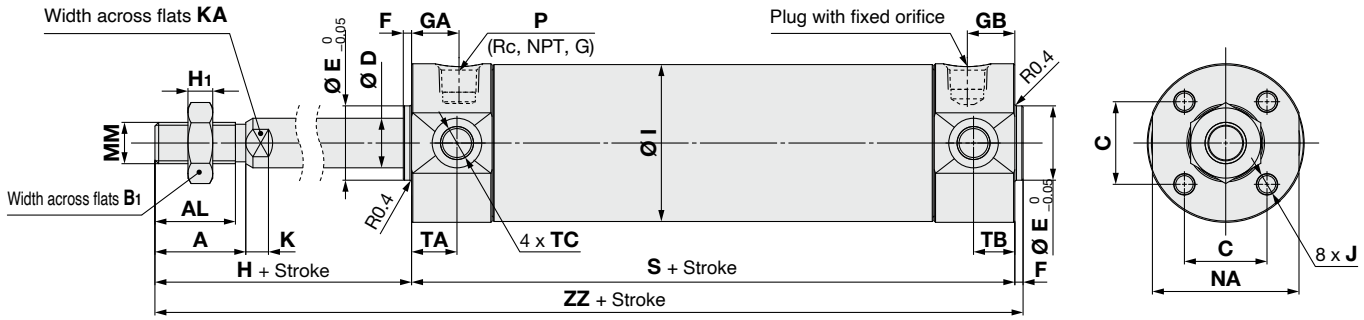

Female rod end

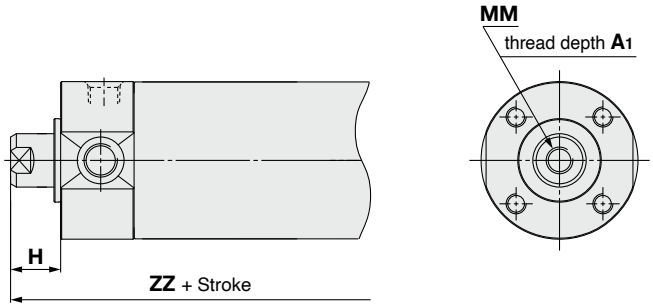

[mm]

Bore size	A	AL	B1	C	D	E	F	GA		GB		H	H1	I	J	K	KA	MM	NA	P	
								Rc, NPT	G	Rc, NPT	G									Rc, NPT	G
20	18	15.5	13	14	8	12	2	11.5		11.5		35	5	26	M4 x 0.7 depth 7	5	6	M8 x 1.25	24	1/8	M5 x 0.8
25	22	19.5	17	16.5	10	14	2	11.5	12	11.5	12	40	6	31	M5 x 0.8 depth 7.5	5.5	8	M10 x 1.25	29	1/8	M5 x 0.8
32	22	19.5	17	20	12	18	2	11.5	10.5	11.5	10.5	40	6	38	M5 x 0.8 depth 8	5.5	10	M10 x 1.25	35.5	1/8	
40	30	27	19	26	16	25	2	13		13		50	8	47	M6 x 1 depth 12	6	14	M14 x 1.5	44	1/8	

Bore size	TA	TB	TC	1 to 50 st		51 to 100 st		101 to 125 st		126 to 200 st	
				S	ZZ	S	ZZ	S	ZZ	S	ZZ
20	11	11	M5 x 0.8	94	131	119	156	144	181	—	—
25	11	11	M6 x 0.75	94	136	119	161	144	186	169	211
32	11	10	M8 x 1.0	96	138	121	163	146	188	171	213
40	12	10	M10 x 1.25	103	155	128	180	153	205	178	230

Female Rod End [mm]

Bore size	A1	H	MM	1 to 50 st	51 to 100 st	101 to 125 st	126 to 200 st
				ZZ	ZZ	ZZ	ZZ
20	8	13	M4 x 0.7	109	134	159	—
25	8	14	M5 x 0.8	110	135	160	185
32	12	14	M6 x 1	112	137	162	187
40	13	15	M8 x 1.25	120	145	170	195

With Mounting Bracket

(* The drawings below show the single acting/spring return. The rod is in retracted state for spring extend.)

Axial foot bracket/CG1LN

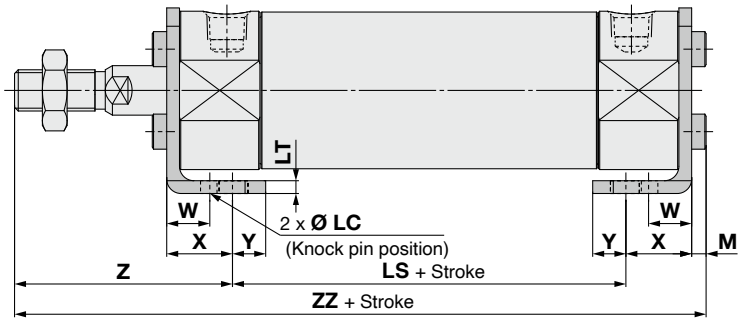

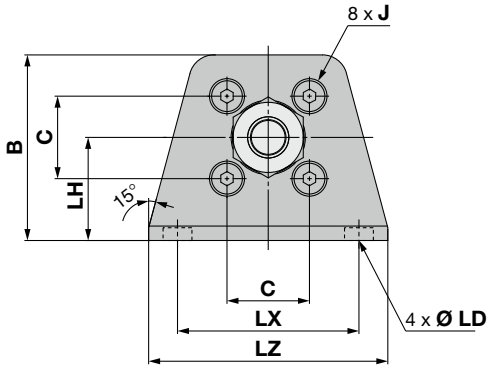

Female rod end

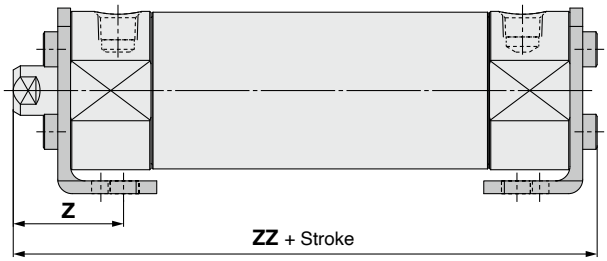

[mm]

Bore size	B	M	LC	LD	LH	LT	LX	LZ	W	X	Y	Z	1 to 50 st		51 to 100 st		101 to 125 st		126 to 200 st	
													LS	ZZ	LS	ZZ	LS	ZZ	LS	ZZ
20	34	3	4	6	20	3	32	44	10	15	7	47	70	135	95	160	120	185	—	—
25	38.5	3.5	4	6	22	3	36	49	10	15	7	52	70	140.5	95	165.5	120	190.5	145	215.5
32	45	3.5	4	7	25	3	44	58	10	16	8	53	70	142.5	95	167.5	120	192.5	145	217.5
40	54.5	4	4	7	30	3	54	71	10	16.5	8.5	63.5	76	160	101	185	126	210	151	235

Female Rod End

[mm]

Bore size	Z	ZZ
20	25	88
25	26	89.5
32	27	91.5
40	28.5	100

With Mounting Bracket

(∗ The drawings below show the single acting/spring return. The rod is in retracted state for spring extend.)

Rod flange/CG1FN

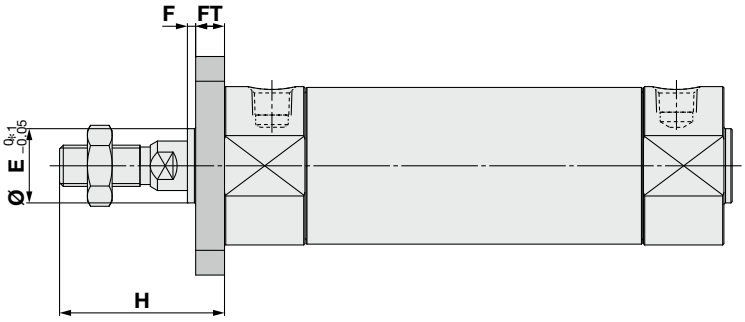

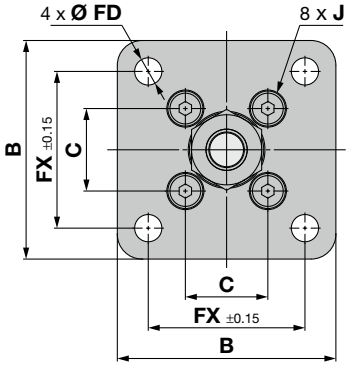

∗1 End boss is machined on the flange for Ø E.

Female rod end

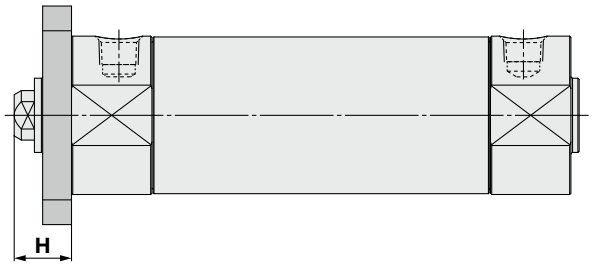

Female Rod End [mm]

Bore size	H
20	13
25	14
32	14
40	15

Head flange/CG1GN

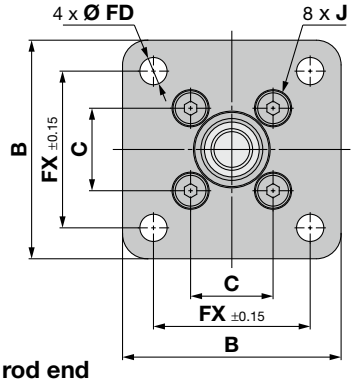

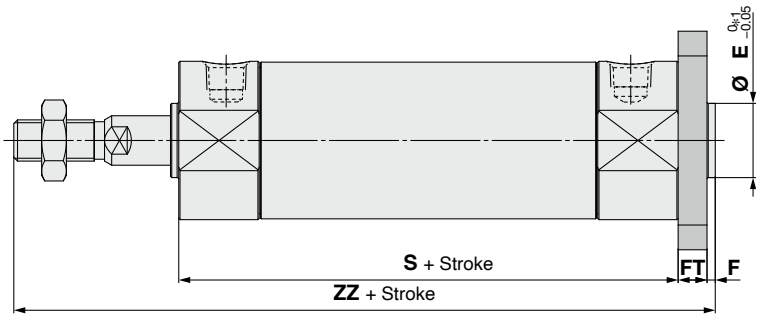

∗1 End boss is machined on the flange for Ø E.

Female rod end

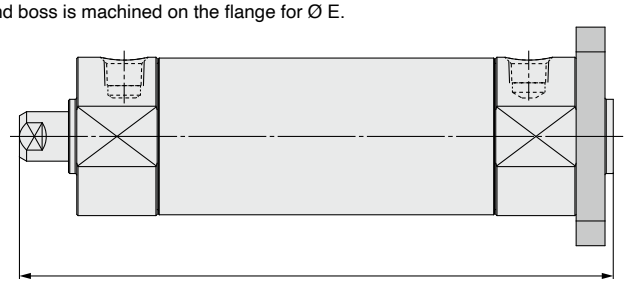

Female Rod End [mm]

Bore size	ZZ
20	90
25	92
32	94
40	103

[mm]

Bore size	B	E	F	FX	FD	FT	H
20	40	12	2	28	5.5	6	35
25	44	14	2	32	5.5	7	40
32	53	18	2	38	6.6	7	40
40	61	25	2	46	6.6	8	50

∗ End boss is machined on the flange for Ø E.

Rod Flange [mm]

Bore size	ZZ			
	1 to 50 st	51 to 100 st	101 to 125 st	126 to 200 st
20	131	156	181	—
25	136	161	186	211
32	138	163	188	213
40	155	180	205	230

Head Flange [mm]

Bore size	ZZ			
	1 to 50 st	51 to 100 st	101 to 125 st	126 to 200 st
20	130	162	187	—
25	143	168	193	218
32	145	170	195	220
40	163	188	213	238

With Mounting Bracket

Rod trunnion/CG1UN

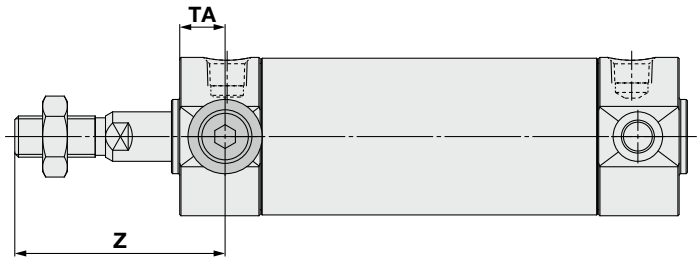

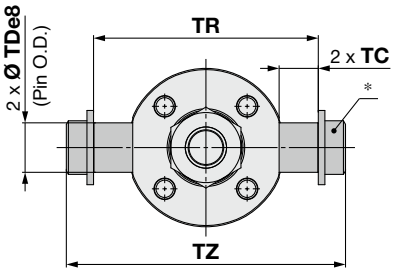

The part marked with an asterisk (*) is constructed of a trunnion pin, flat washer, and hexagon socket head cap screw.

Female rod end

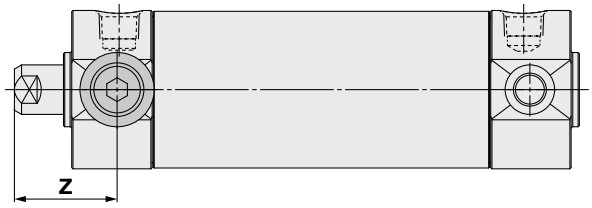

Female Rod End [mm]

Bore size	Z
20	24
25	25
32	25
40	27

Head trunnion/CG1TN

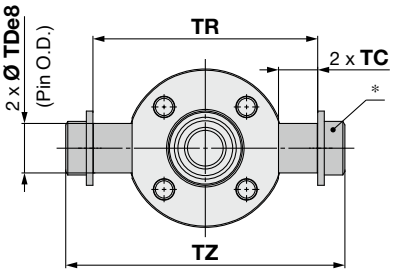

The part marked with an asterisk (*) is constructed of a trunnion pin, flat washer, and hexagon socket head cap screw.

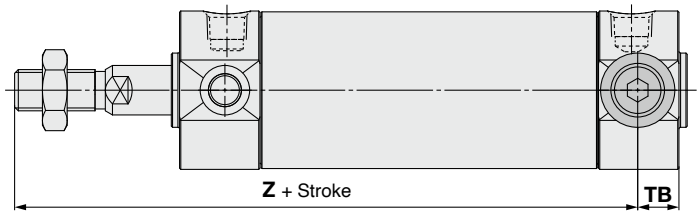

Female rod end

Female Rod End [mm]

Bore size	Z
20	71
25	72
32	75
40	83

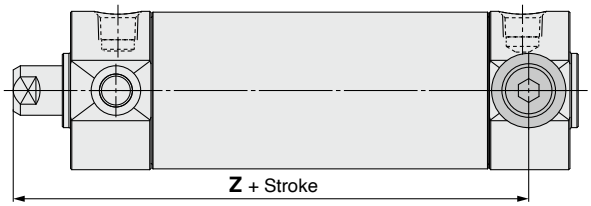

[mm]

Bore size	B	TDe8	TE	TF	TH	TR	TS	TT	TV	TW	TX	TY	TZ
20	38	$8^{-0.025}_{-0.047}$	10	5.5	25	39	28	3.2	(35.8)	42	16	28	47.6
25	45.5	$10^{-0.025}_{-0.047}$	10	5.5	30	43	33	3.2	(39.8)	42	20	28	53
32	54	$12^{-0.032}_{-0.059}$	10	6.6	35	54.5	40	4.5	(49.4)	48	22	28	67.7
40	63.5	$14^{-0.032}_{-0.059}$	10	6.6	40	65.5	49	4.5	(58.4)	56	30	30	78.7

Rod Trunnion [mm]

Bore size	Z	ZZ			
		1 to 50 st	51 to 100 st	101 to 125 st	126 to 200 st
20	46	131	156	181	—
25	51	136	161	186	211
32	51	138	163	188	213
40	62	155	180	205	230

* The part marked with an asterisk (*) is constructed of a pin, flat washer, and hexagon socket head cap screw.
* Other dimensions are the same as the basic type.

Head Trunnion [mm]

Bore size	1 to 50 st		51 to 100 st		101 to 125 st		126 to 200 st	
	Z	ZZ	Z	ZZ	Z	ZZ	Z	ZZ
20	118	139	143	164	168	189	—	—
25	123	144	148	169	173	194	198	219
32	126	150	151	175	176	200	201	225
40	143	171	168	196	193	221	218	246

* The part marked with an asterisk (*) is constructed of a pin, flat washer, and hexagon socket head cap screw.
* Other dimensions are the same as the basic type.

With Mounting Bracket

Clevis/CG1DN

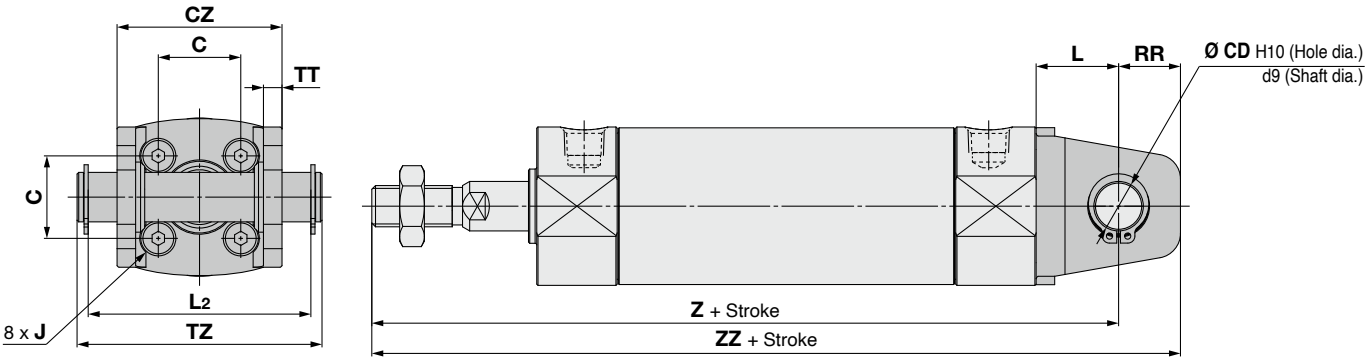

Female rod end

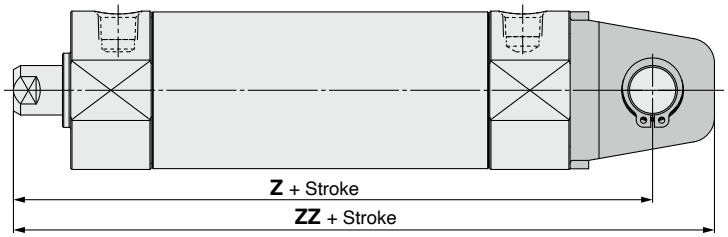

Female Rod End [mm]

Bore size	Z	ZZ
20	96	107
25	99	112
32	105	120
40	115	133

[mm]

Bore size	B	CD	CZ	L	RR	TE	TF	TH	TT	TV	TW	TX	TY	TZ	1 to 50 st		51 to 100 st		101 to 125 st		126 to 200 st	
															Z	ZZ	Z	ZZ	Z	ZZ	Z	ZZ
20	38	8	29	14	11	10	5.5	25	3.2	(35.8)	42	16	28	43.4	143	164	168	189	193	214	—	—
25	45.5	10	33	16	13	10	5.5	30	3.2	(39.8)	42	20	28	48	150	171	175	196	200	221	225	246
32	54	12	40	20	15	10	6.6	35	4.5	(49.4)	48	22	28	59.4	156	180	181	205	206	230	231	255
40	63.5	14	49	22	18	10	6.6	40	4.5	(58.4)	56	30	30	71.4	175	200	200	228	225	253	250	278

∗ For pivot bracket dimensions, refer to the **catalogue on www.smc.eu**.
∗ Other dimensions are the same as the basic type.

Air Cylinder: Direct Mount Type
Double Acting
CG1R Series

RoHS

Ø 20, Ø 25, Ø 32, Ø 40, Ø 50, Ø 63

How to Order

CG1R N 25 □ – 100 □ Z1 – □ – □

With auto switch CDG1R N 25 □ – 100 □ Z1 – □ – M9BW □ – □

With auto switch (Built-in magnet) ●

❶ ❷ ❸ ❹ ❺ ❻ ❼ ❽ ❾

❶ Type

N	Rubber bumper
A	Air cushion

❷ Bore size

20	20 mm
25	25 mm
32	32 mm
40	40 mm
50	50 mm
63	63 mm

❸ Port thread type

Rubber bumper

—	Rc	Ø 20 to Ø 63
TN	NPT	Ø 20 to Ø 63
TF	M5 x 0.8	Ø 20, Ø 25
	G	Ø 32 to Ø 63

Air cushion

M5 x 0.8	Ø 20, Ø 25
Rc	Ø 32 to Ø 63
NPT*1	Ø 32 to Ø 63
G*1	Ø 32 to Ø 63

*1 Not available for Ø 20 and Ø 25.

❹ Cylinder stroke [mm]

For standard strokes, refer to page 28.

❺ Rod end thread

—	Male rod end
F	Female rod end

❻ Rod end bracket

—	No bracket
V	Single knuckle joint
W	Double knuckle joint
Q	Rod end

* No bracket is provided for the female rod end.
* The rod end bracket is shipped together with the product but does not come assembled.
* A knuckle joint pin is not provided with the single knuckle joint.

❼ Auto switch

—	Without auto switch

* For applicable auto switches, refer to the table below.

❽ Number of auto switches

—	2
S	1
n	n

❾ Made to order

For details, refer to page 28.

* **For the ordering example of cylinder assembly, refer to page 28.**

Applicable Auto Switches / Refer to the **catalogue on www.smc.eu** for further information on auto switches.

Type	Special function	Electrical entry	Indicator light	Wiring (Output)	Load voltage DC		Load voltage AC	Auto switch model (Applicable bore size Ø 20 to Ø 63) Perpendicular	In-line	Lead wire length [m] 0.5 (—)	1 (M)	3 (L)	5 (Z)	Pre-wired connector	Applicable load	
Solid state auto switch	——	Grommet	Yes	3-wire (NPN)	24 V	5 V, 12 V	—	M9NV	M9N	●	●	●	○	○	IC circuit	Relay, PLC
				3-wire (PNP)				M9PV	M9P	●	●	●	○	○		
				2-wire		12 V		M9BV	M9B	●	●	●	○	○	—	
	Diagnostic indication (2-colour indicator)	Grommet		3-wire (NPN)		5 V, 12 V		M9NWV	M9NW	●	●	●	○	○	IC circuit	
				3-wire (PNP)				M9PWV	M9PW	●	●	●	○	○		
				2-wire		12 V		M9BWV	M9BW	●	●	●	○	○	—	
	Water resistant (2-colour indicator)			3-wire (NPN)		5 V, 12 V		M9NAV*1	M9NA*1	○	○	●	○	○	IC circuit	
				3-wire (PNP)				M9PAV*1	M9PA*1	○	○	●	○	○		
				2-wire		12 V		M9BAV*1	M9BA*1	○	○	●	○	○	—	
Reed auto switch	——	Grommet	Yes	3-wire (NPN equivalent)	—	5 V	—	A96V	A96	●	●	●	●	○	IC circuit	—
			No	2-wire	24 V	12 V	100 V	A93V	A93	●	●	●	●	○*2	—	Relay, PLC
							100 V or less	A90V	A90	●	●	●	●	○*2	IC circuit	

*1 Water-resistant type auto switches can be mounted on the above models, but SMC cannot guarantee water resistance.
A water-resistant type cylinder is recommended for use in an environment which requires water resistance.
*2 The load voltage used is 24 VDC.

* Lead wire length symbols: 0.5 m..... — (Example) M9NW
1 m..... M (Example) M9NWM
3 m..... L (Example) M9NWL
5 m..... Z (Example) M9NWZ

* Auto switches marked with a "○" are produced upon receipt of order.

* Since there are applicable auto switches other than those listed above, refer to page 47 for details.
* For details on auto switches with pre-wired connectors, refer to the **catalogue on www.smc.eu**.
* The D-A9□□/M9□□□ auto switches are shipped together with the product but do not come assembled. (Only the auto switch mounting brackets are assembled before shipment.)

The CG1R direct mount cylinder can be installed directly through the use of a square rod cover.

Space-saving has been realised.

Because it is a directly mounted type without using brackets, its overall length is shorter, and its installation pitch can be made smaller. Thus, the space that is required for installation has been dramatically reduced.

Symbol

Rubber bumper

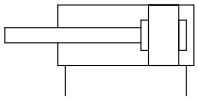

Air cushion

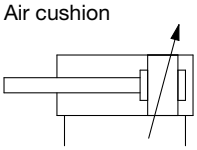

Made to Order Common Specifications (For details, refer to the catalogue on www.smc.eu.)

Symbol	Specifications
-XB6	Heat resistant cylinder (–10 to 150 °C)*1
-XB7	Cold resistant cylinder (–40 to 70 °C)*2
-XC6	Made of stainless steel

*1 Cylinders with rubber bumper have no bumper.
*2 Only compatible with cylinders with rubber bumper, but has no bumper.

Refer to pages 39 to 49 for cylinders with auto switches.

- Auto Switch Proper Mounting Position (Detection at stroke end) and Mounting Height
- Minimum Stroke for Auto Switch Mounting
- Auto Switch Mounting Brackets/Part Nos.
- Operating Range
- Cylinder Mounting Bracket, by Stroke/Auto Switch Mounting Surfaces

⚠ Precautions

Refer to pages 51 to 53 before handling.

Specifications

Bore size [mm]	20	25	32	40	50	63
Action	Double acting, Single rod					
Lubricant	Not required (Non-lube)					
Fluid	Air					
Proof pressure	1.5 MPa					
Maximum operating pressure	1.0 MPa					
Minimum operating pressure	0.05 MPa					
Ambient and fluid temperatures	Without auto switch: –10 °C to 70 °C With auto switch: –10 °C to 60 °C (No freezing)					
Piston speed	50 to 1000 mm/s					
Stroke length tolerance	Up to 300 $^{+1.4}_{0}$ mm					
Cushion	Rubber bumper, Air cushion					

Standard Strokes

[mm]

Bore size	Standard stroke*1
20	25, 50, 75, 100, 125, 150
25, 32	25, 50, 75, 100, 125, 150, 200
40, 50, 63	25, 50, 75, 100, 125, 150, 200, 250, 300

*1 Please contact SMC for strokes which exceed the standard stroke length.
* Intermediate strokes not listed above are produced upon receipt of order. The manufacturing of intermediate strokes in 1 mm increments is possible. (Spacers are not used.)
* Applicable strokes should be confirmed according to the usage. For details, refer to the "Air Cylinders Model Selection" in the **catalogue on www.smc.eu**. In addition, the products that exceed the standard stroke might not be able to fulfill the specifications due to deflection, etc.
* Using a stroke of a length which is smaller than the effective cushion length may result in reduced air cushion performance. Refer to "Technical Data 1" in the **catalogue on www.smc.eu** for details on the effective cushion length.
* The min. stroke of the type with a magnet varies depending on the switch. For details, refer to pages 44 and 49.

Tightening Torque: Tighten the cylinder mounting bolts with the following tightening torque.

Bore size [mm]	Hexagon socket head cap screw size	Tightening torque [N·m]
20	M5 x 0.8	2.4 to 3.6
25	M6	4.2 to 6.2
32	M8	10.0 to 15.0
40	M10	19.6 to 29.4
50	M12	33.6 to 50.4
63	M16	84.8 to 127.2

Ordering Example of Cylinder Assembly

Cylinder model: CDG1RN20-100Z1-W-M9BW

Rod end bracket W: Double knuckle joint
Auto switch D-M9BW: 2 pcs.

* Double knuckle joint and auto switch are shipped together with the product but do not come assembled.

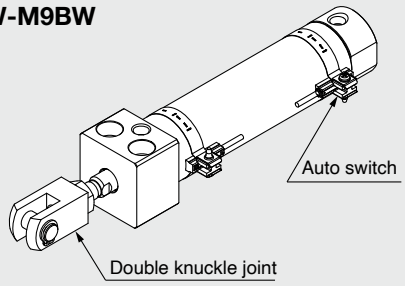

Weight

[kg]

Bore size [mm]	20	25	32	40	50	63
Basic weight	0.14	0.23	0.35	0.57	1.04	1.49
Single knuckle joint	0.05	0.09	0.09	0.10	0.22	0.22
Double knuckle joint (with pin)	0.05	0.09	0.09	0.13	0.26	0.26
Additional weight per 50 mm of stroke	0.05	0.07	0.09	0.14	0.21	0.25
Additional weight with air cushion	0	0.01	0.04	0	0.01	0.04
Weight reduction for female rod end	−0.01	−0.02	−0.02	−0.05	−0.10	−0.10

Calculation (Example) **CG1RN32-100Z1** (Ø 32, 100 mm stroke)
- Basic weight····· 0.35
- Additional weight ····· 0.09/50 mm stroke
- Air cylinder stroke ····· 100 mm stroke

0.35 + 0.09 x 100/50 = **0.53 kg**

Accessories

Mounting		Basic
Standard	Rod end nut	●
Option	Single knuckle joint	●
	Double knuckle joint*1 (with pin)	●

*1 A double knuckle joint pin and retaining rings are shipped together.
* Refer to page 16 for part numbers and dimensions of the accessories.
* Stainless steel accessories are also available. Refer to page 17 for details.

Replacement Parts

With rubber bumper

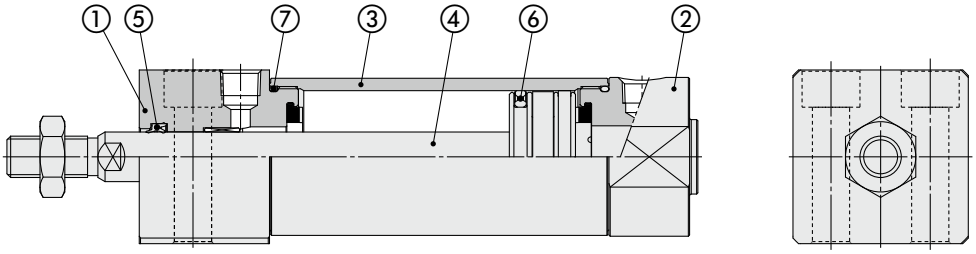

With air cushion

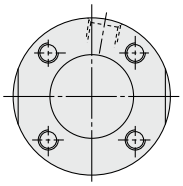

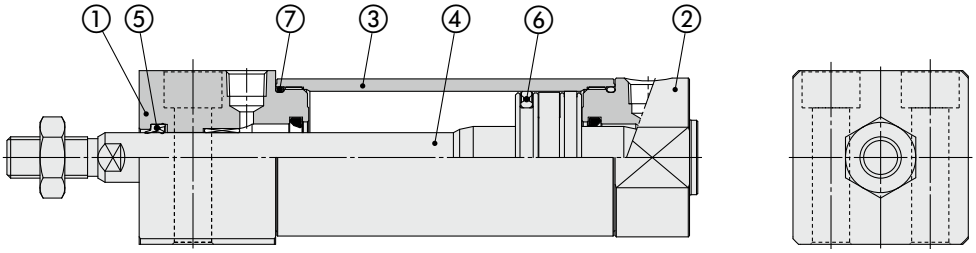

Component Parts

No.	Description
1	**Rod cover**
2	**Head cover**
3	**Cylinder tube**
4	**Piston rod**
5	**Rod seal**
6	**Piston seal**
7	**Tube gasket**

Replacement parts/Seal kit are the same as standard type, double acting, single rod. Refer to page 8.

* As sizes Ø 50 and larger cannot be disassembled, the seal cannot be replaced.

Basic: Bottom Mounting

With rubber bumper

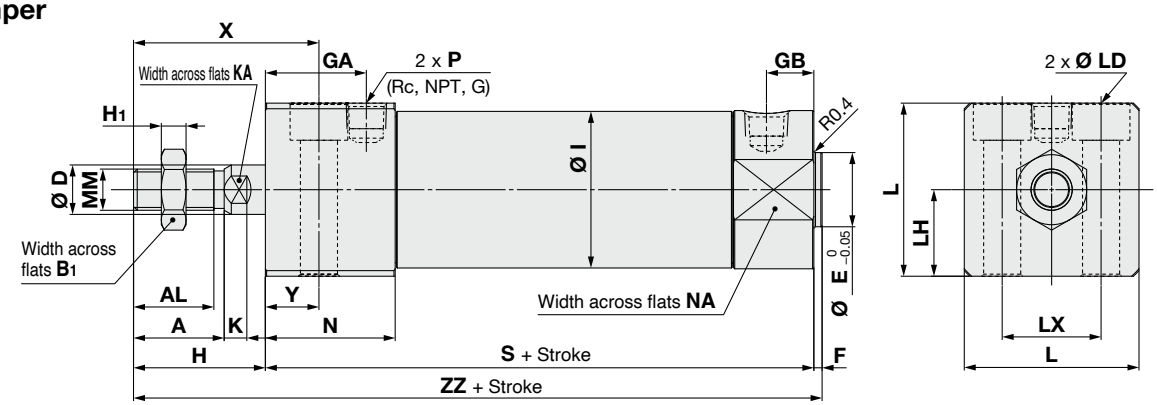

With air cushion

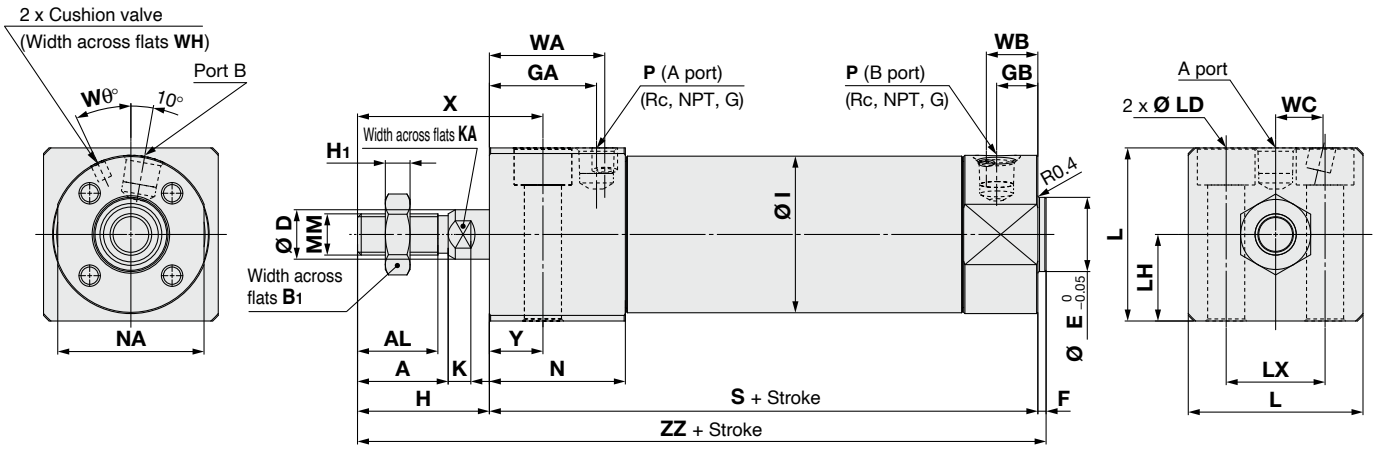

Female rod end

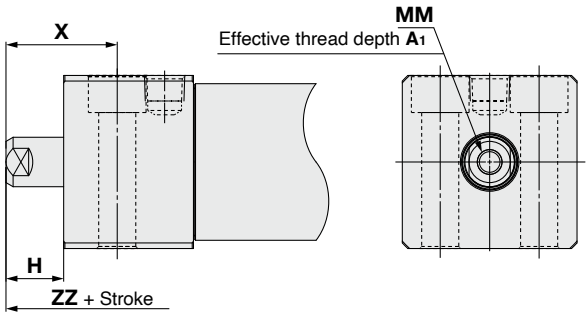

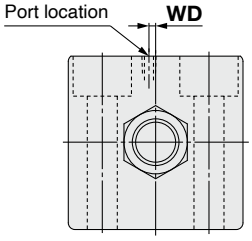

Ø 20, Ø 25

[mm]

Bore size	A	AL	B1	D	E	F	GA		GB		H	H1	I	K	KA	L	LD	LH	LX	MM	N	NA	P		S	X	Y	ZZ
							Rc, NPT	G	Rc, NPT	G													Rc, NPT	G				
20	18	15.5	13	8	12	2	18		11.5		27	5	26	5	6	30.4	Ø 5.5, Counterbore diameter Ø 9.5, depth 6	15	18	M8 x 1.25	25	24	1/8	M5 x 0.8	75	38	11	104
25	22	19.5	17	10	14	2	20.5		11.5	12	32	6	31	5.5	8	36.4	Ø 6.6, Counterbore diameter Ø 11, depth 7	18	22	M10 x 1.25	27.5	29	1/8	M5 x 0.8	77	44	12	111
32	22	19.5	17	12	18	2	24.5	23.5	11.5	10.5	32	6	38	5.5	10	42.4	Ø 9, Counterbore diameter Ø 14, depth 9	21	24	M10 x 1.25	31.5	35.5	1/8		83	45	13	117
40	30	27	19	16	25	2	30	29	13		39	8	47	6	14	52.4	Ø 11, Counterbore diameter Ø 17.5, depth 12	26	32	M14 x 1.5	37	44	1/8		94	55	16	135
50	35	32	27	20	30	2	30.5		14		45	11	58	7	18	64.5	Ø 14, Counterbore diameter Ø 20, depth 14	32	41	M18 x 1.5	42.5	55	1/4		108	62	17	155
63	35	32	27	20	32	2	37.5		14		45	11	72	7	18	76.6	Ø 18, Counterbore diameter Ø 26, depth 18	38	46	M18 x 1.5	48.4	69	1/4		114	64	19	161

With Air Cushion [mm]

Bore size	P Rc, NPT, G	WA	WB	WC	WD	Wθ	WH
20	M5 x 0.8	22	12	5.5	2	25°	1.5
25	M5 x 0.8	22.5	13.5	7	2	25°	1.5
32	1/8	28	12.5	11.5	–	25°	1.5
40	1/8	32	14	15	–	20°	1.5
50	1/4	35	17	17.5	–	20°	3
63	1/4	41	17	20.5	–	20°	3

Female Rod End [mm]

Bore size	A1	H	MM	X	ZZ
20	8	13	M4 x 0.7	24	90
25	8	14	M5 x 0.8	26	93
32	12	14	M6 x 1	27	99
40	13	15	M8 x 1.25	31	111
50	18	16	M10 x 1.5	33	126
63	18	16	M10 x 1.5	35	132

Air Cylinder: With End Lock

CBG1 Series

RoHS

Ø 20, Ø 25, Ø 32, Ø 40, Ø 50, Ø 63, Ø 80, Ø 100

How to Order

CBG1 [L] [N] [25] – [100] [ ] Z1 – [H] [N] – [ ]

CDBG1 [L] [N] [25] – [100] [ ] Z1 – [H] [N] – [M9BW] [ ] – [ ]

❶ ❷ ❸ ❹ ❺ ❻ ❼ ❽ ❾ ❿

With auto switch (Built-in magnet)

❶ Mounting

B	Basic (Without trunnion mounting female thread)
Z*1, *2	Basic (With trunnion mounting female thread)
L	Axial foot bracket
F	Rod flange
G	Head flange
U*1, *2	Rod trunnion
T*1, *2	Head trunnion
D	Clevis

*1 Not available for Ø 80 and Ø 100
*2 The trunnion cannot be attached on the side to which an end lock is attached.
* Mounting brackets are shipped together with the product but do not come assembled.
* The cylinder for L, F, G, and D mounting types is B: Basic (Without trunnion mounting female thread).

The presence of the trunnion mounting female thread (B, Z) is different from the existing product. Choose Z (with trunnion mounting female thread) when mounting the trunnion afterward.

❷ Type

N	Rubber bumper
A	Air cushion

❺ With rod boot

—	Without rod boot
J	Nylon tarpaulin
K	Heat-resistant tarpaulin

* In the case of w/rod boot, and a foot bracket or rod flange as a bracket, those parts are to be assembled at the time of shipment.

❽ Auto switch

—	Without auto switch

* For applicable auto switches, refer to the table below.

❸ Bore size

20	20 mm	50	50 mm
25	25 mm	63	63 mm
32	32 mm	80	80 mm
40	40 mm	100	100 mm

❻ Lock position

H	Head end lock
R	Rod end lock
W	Double end lock

❾ Number of auto switches

—	2
S	1
n	n

❹ Cylinder stroke [mm]

For standard strokes, refer to page 32.

❼ Manual release

N	Non-locking type
L	Locking type

❿ Made to order

For details ⇒p. 32

Applicable Auto Switches / Refer to the **catalogue on www.smc.eu** for further information on auto switches.

Type	Special function	Electrical entry	Indicator light	Wiring (Output)	Load voltage DC		Load voltage AC	Auto switch model: Applicable bore size Ø 20 to Ø 63 Perpendicular	Ø 20 to Ø 63 In-line	Ø 80, Ø 100 In-line	Lead wire length [m] 0.5 (—)	1 (M)	3 (L)	5 (Z)	Pre-wired connector	Applicable load	
Solid state auto switch	——	Grommet	Yes	3-wire (NPN)	24 V	5 V, 12 V	—	M9NV	M9N	—	●	●	●	○	○	IC circuit	Relay, PLC
								—	—	G59	●	—	●	○	○		
				3-wire (PNP)				M9PV	M9P	—	●	●	●	○	○		
								—	—	G5P	●	—	●	○	○		
				2-wire		12 V		M9BV	M9B	—	●	●	●	○	○	—	
								—	—	K59	●	—	●	○	○		
	Diagnostic indication (2-colour indicator)	Grommet		3-wire (NPN)		5 V, 12 V		M9NWV	M9NW	—	●	●	●	○	○	IC circuit	
								—	—	G59W	●	—	●	○	○		
				3-wire (PNP)				M9PWV	M9PW	—	●	●	●	○	○		
								—	—	G5PW	●	—	●	○	○		
				2-wire		12 V		M9BWV	M9BW	—	●	●	●	○	○	—	
								—	—	K59W	●	—	●	○	○		
	Water resistant (2-colour indicator)			3-wire (NPN)		5 V, 12 V		M9NAV*1	M9NA*1	—	○	○	●	○	○	IC circuit	
				3-wire (PNP)				M9PAV*1	M9PA*1	—	○	○	●	○	○		
				2-wire		12 V		M9BAV*1	M9BA*1	—	○	○	●	○	○	—	
								—	—	G5BA*1	—	—	●	○	○		
Reed auto switch	——	Grommet	Yes	3-wire (NPN equivalent)	—	5 V	—	A96V	A96	—	●	●	●	●	○	IC circuit	—
			No	2-wire	24 V	12 V	100 V	A93V	A93	—	●	●	●	●	○*2	—	Relay, PLC
							100 V or less	A90V	A90	—	●	●	●	●	○*2	IC circuit	
			Yes				100 V, 200 V	—	—	B54	●	—	●	●	—	—	
			No				200 V or less	—	—	B64	●	—	●	—	—		

*1 Water-resistant type auto switches can be mounted on the above models, but SMC cannot guarantee water resistance. A water-resistant type cylinder is recommended for use in an environment which requires water resistance.
*2 The load voltage used is 24 VDC.
* Lead wire length symbols: 0.5 m····· — (Example) M9NW
1 m····· M (Example) M9NWM
3 m····· L (Example) M9NWL
5 m····· Z (Example) M9NWZ

* Auto switches marked with a "○" are produced upon receipt of order.

* Since there are applicable auto switches other than those listed above, refer to page 47 for details.
* For details on auto switches with pre-wired connectors, refer to the **catalogue on www.smc.eu**.
* The D-A9□□/M9□□□ auto switches are shipped together with the product but do not come assembled. (Only the auto switch mounting brackets are assembled before shipment.)

Symbol

Rubber bumper

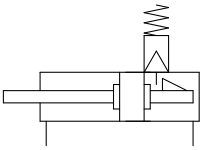

Air cushion

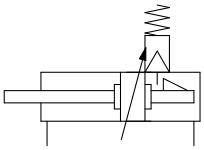

Made to Order Common Specifications (For details, refer to the catalogue on www.smc.eu.)

Symbol	Specifications
-XA□	Change of rod end shape
-XC13	Auto switch rail mounting

Refer to pages 39 to 49 for cylinders with auto switches.

- Auto Switch Proper Mounting Position (Detection at stroke end) and Mounting Height
- Minimum Stroke for Auto Switch Mounting
- Auto Switch Mounting Brackets/Part Nos.
- Operating Range
- Cylinder Mounting Bracket, by Stroke/Auto Switch Mounting Surfaces

⚠ Precautions

Refer to pages 51 to 53 before handling.

Specifications

Bore size [mm]	20	25	32	40	50	63	80	100
Action	Double acting, Single rod							
Lubricant	Not required (Non-lube)							
Fluid	Air							
Proof pressure	1.5 MPa							
Maximum operating pressure	1.0 MPa							
Minimum operating pressure	0.15 MPa*1							
Ambient and fluid temperatures	Without auto switch: –10 to 70 °C With auto switch: –10 to 60 °C (No freezing)							
Piston speed	50 to 1000 mm/s						50 to 700 mm/s	
Stroke length tolerance	Up to 1000 $^{+1.4}_{0}$ mm, Up to 1500 $^{+1.8}_{0}$ mm							
Cushion	Rubber bumper, Air cushion							
Mounting *2	Basic, Axial foot bracket, Rod flange, Head flange, Rod trunnion, Head trunnion, Clevis							

*1 0.05 MPa except locking parts
*2 Cylinder sizes Ø 80 and Ø 100 do not have basic (with trunnion mounting female thread), rod trunnion, and head trunnion types.
Trunnion is not attached for a cover on which lock mechanism is equipped.

Lock Specifications

Lock position	Head end, Rod end, Double end							
Holding force (Max.) [N]	Ø 20	Ø 25	Ø 32	Ø 40	Ø 50	Ø 63	Ø 80	Ø 100
	215	330	550	860	1340	2140	3450	5390
Backlash	2 mm or less							
Manual release	Non-locking type, Locking type							

Adjust the switch position so that it operates upon movement to both the stroke end and backlash (2 mm) positions.

Standard Strokes

[mm]

Bore size	Standard stroke*1	Max. manufacturable stroke
20	25, 50, 75, 100, 125, 150, 200	1500
25, 32, 40, 50, 63, 80, 100	25, 50, 75, 100, 125, 150, 200, 250, 300	

*1 Intermediate strokes not listed above are produced upon receipt of order. The manufacturing of intermediate strokes in 1 mm increments is possible. (Spacers are not used.)
* Applicable strokes should be confirmed according to the usage. For details, refer to the "Air Cylinders Model Selection" in the **catalogue on www.smc.eu**. In addition, the products that exceed the standard stroke might not be able to fulfill the specifications due to deflection, etc.
* Using a stroke of a length which is smaller than the effective cushion length may result in reduced air cushion performance. Refer to "Technical Data 1" in the **catalogue on www.smc.eu** for details on the effective cushion length.
* The min. stroke of the type with a magnet varies depending on the switch. For details, refer to pages 44 and 49.

Rod Boot Material

Symbol	Rod boot material	Maximum operating temperature
J	Nylon tarpaulin	70 °C
K	Heat-resistant tarpaulin	110 °C*1

*1 Maximum ambient temperature for the rod boot itself.

Accessories

Mounting		Basic
Standard	Rod end nut	●
Option	Single knuckle joint	●
	Double knuckle joint*1 (with pin)	●
	Pivot bracket	●

*1 A double knuckle joint pin and retaining rings are shipped together.
* Refer to page 16 for part numbers and dimensions of the accessories.
* Stainless steel mounting brackets and accessories are also available.
Refer to page 17 for details.

Replacement Parts

With rubber bumper

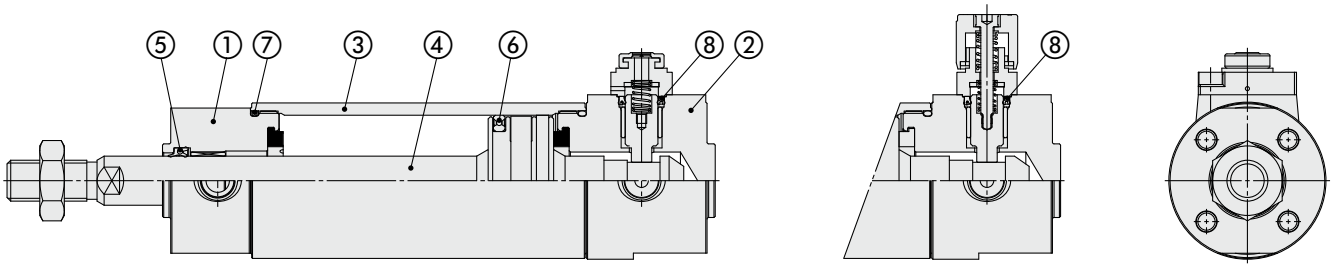

With air cushion

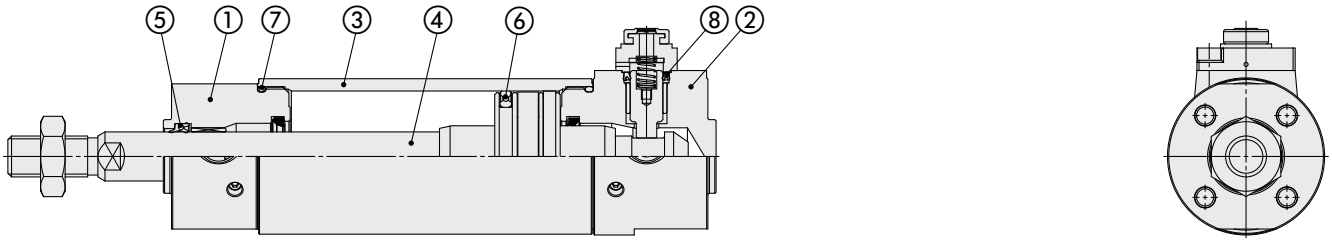

Component Parts

No.	Description
1	**Rod cover**
2	**Head cover**
3	**Cylinder tube**
4	**Piston rod**
5	**Rod seal**
6	**Piston seal**
7	**Tube gasket**
8	**Lock piston seal**

Replacement Parts: Seal Kit (With one end lock)

Bore size	Kit no.	Contents
20	CBG1N20Z1-PS	Set of nos. ⑤, ⑥, ⑦, ⑧
25	CBG1N25Z1-PS	
32	CBG1N32Z1-PS	
40	CBG1N40Z1-PS	

∗ As sizes Ø 5 0 and larger cannot be disassembled, the seal cannot be replaced.
∗ The seal kit includes a grease pack (10 g).
Order with the following part number when only the grease pack is needed.
Grease pack part number: GR-S-010 (10 g)

Replacement Parts: Seal Kit (With double end lock)

Bore size	Kit no.	Contents
20	CBG1N20Z1-PS-W	Set of nos. ⑤, ⑥, ⑦, ⑧
25	CBG1N25Z1-PS-W	
32	CBG1N32Z1-PS-W	
40	CBG1N40Z1-PS-W	

∗ As sizes Ø 5 0 and larger cannot be disassembled, the seal cannot be replaced.
∗ The seal kit includes a grease pack (10 g).
Order with the following part number when only the grease pack is needed.
Grease pack part number: GR-S-010 (10 g)

Basic with Rubber Bumper: CBG1□N

∗ The figures below show mounting type "Z" (basic with trunnion mounting female thread). Mounting type "B" (basic without trunnion mounting female thread) does not have "TC."

Head end lock: CBG1□N Bore size — Stroke Z1 — H□

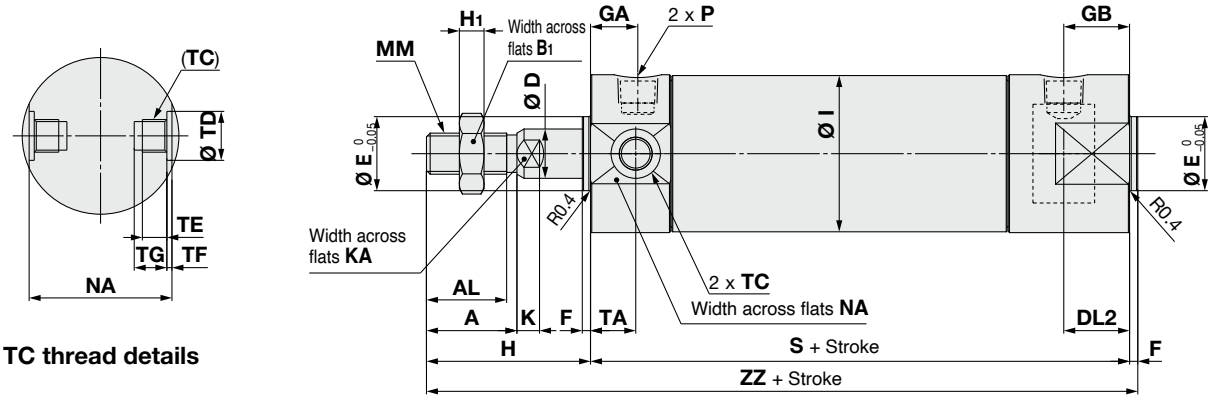

Non-locking type manual release (Suffix N)

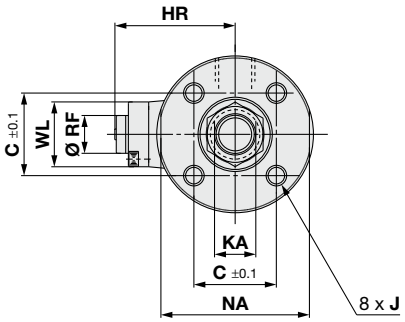

Locking type manual release (Suffix L)

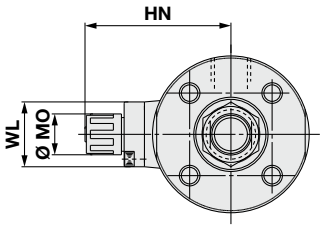

[mm]

Bore size [mm]	A	AL	B1	C	D	DL2	E	F	GA		GB	H	H1	HR	HN (Max.)	I	J
									Rc, NPT	G	Rc, NPT, G						
20	18	15.5	13	14	8	14	12	2	11.5		14	35	5	25.3	37	26	M4 x 0.7 depth 7
25	22	19.5	17	16.5	10	15	14	2	11.5	12	15	40	6	28.3	40	31	M5 x 0.8 depth 7.5
32	22	19.5	17	20	12	16	18	2	11.5	10.5	16	40	6	31.3	43	38	M5 x 0.8 depth 8
40	30	27	19	26	16	20	25	2	13		20	50	8	38.3	52.5	47	M6 x 1 depth 12
50	35	32	27	32	20	23	30	2	14		23	58	11	44.5	58.5	58	M8 x 1.25 depth 16
63	35	32	27	38	20	23	32	2	14		23	58	11	45	59	72	M10 x 1.5 depth 16
80	40	37	32	50	25	29	40	3	20		29	71	13	53.5	68	89	M10 x 1.5 depth 22
100	40	37	41	60	30	29	50	3	16		29	71	16	64.5	79	110	M12 x 1.75 depth 22

Bore size [mm]	K	KA	MM	MO	NA	P		RF	S	TA	TC	TD	TE	TF	TG	WL	ZZ
						Rc, NPT	G										
20	5	6	M8 x 1.25	15	24	1/8	M5 x 0.8	11	81	11	M5 x 0.8	$8^{+0.08}_{0}$	4	0.5	5.5	15	118
25	5.5	8	M10 x 1.25	15	29	1/8	M5 x 0.8	11	81	11	M6 x 0.75	$10^{+0.08}_{0}$	5	1	6.5	15	123
32	5.5	10	M10 x 1.25	15	35.5	1/8		11	81	11	M8 x 1.0	$12^{+0.08}_{0}$	5.5	1	7.5	24	123
40	6	14	M14 x 1.5	19	44	1/8		11	92	12	M10 x 1.25	$14^{+0.08}_{0}$	6	1.25	8.5	24	144
50	7	18	M18 x 1.5	19	55	1/4		11	107	13	M12 x 1.25	$16^{+0.08}_{0}$	7.5	2	10	24	167
63	7	18	M18 x 1.5	19	69	1/4		11	107	13	M14 x 1.5	$18^{+0.08}_{0}$	11.5	3	14.5	24	167
80	10	22	M22 x 1.5	23	80	3/8		21	130	—	—	—	—	—	—	40	204
100	10	26	M26 x 1.5	23	100	1/2		21	130	—	—	—	—	—	—	40	204

Basic with Rubber Bumper: CBG1□N

Dimensions not indicated below are the same as those of the basic with head end lock type.

∗ The figures below show mounting type "Z" (basic with trunnion mounting female thread). Mounting type "B" (basic without trunnion mounting female thread) does not have "TC."

Rod end lock: CBG1□N Bore size — Stroke Z1 — R□

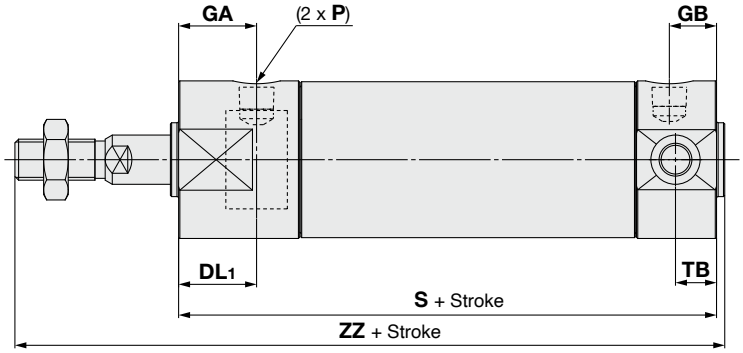

[mm]

Bore size [mm]	DL1	GA	GB		S	TB	ZZ
		Rc, NPT, G	Rc, NPT	G			
20	18	18	11.5		80	11	117
25	18	18	11.5	12	80	11	122
32	19	19	11.5	10.5	81	10	123
40	20	20	13		87	10	139
50	23	23	14		102	12	162
63	22.5	22.5	14		102	12	162
80	29	29	16		124	—	198
100	28	28	16		124	—	198

Double end lock: CBG1□N Bore size — Stroke Z1 — W□

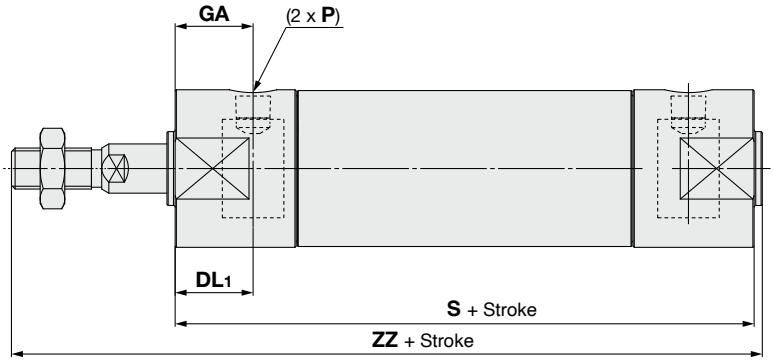

[mm]

Bore size [mm]	DL1	GA	S	ZZ
		Rc, NPT, G		
20	18	18	92	129
25	18	18	92	134
32	19	19	91	133
40	20	20	101	153
50	23	23	119	179
63	22.5	22.5	119	179
80	29	29	146	220
100	28	28	146	220

With rod boot

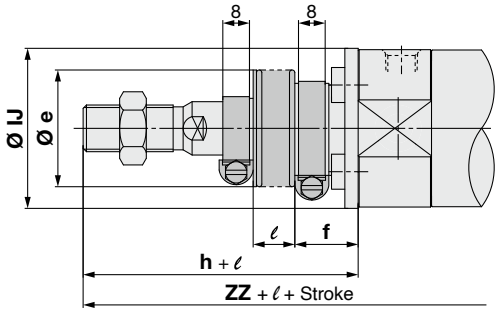

Ø 20 to Ø 63

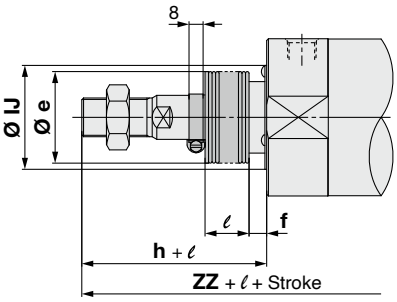

Ø 80, Ø 100

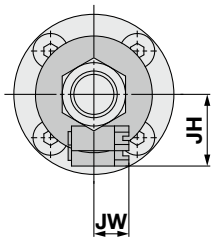

[mm]

Bore size [mm]	e	f	h	IJ	JH (Reference)	JW (Reference)	ℓ	Head end lock/-H□ ZZ	Rod end lock/-R□ ZZ	Double end lock/-W□ ZZ
20	30	18	55	27	15.5	10.5	1/4 stroke	138	137	149
25	30	19	62	32	16.5	10.5		145	144	156
32	35	19	62	38	18.5	10.5		145	145	155
40	35	19	70	48	21.5	10.5		164	159	173
50	40	19	78	59	24	10.5		187	182	199
63	40	20	78	72	24	10.5		187	182	199
80	52	10	80	59	—	—		213	207	229
100	62	7	80	71	—	—		213	207	229

∗ The minimum stroke with a rod boot is 20 mm.

Basic with Air Cushion: CBG1□A

Head end lock: CBG1□A Bore size — Stroke Z1 — H□
Rod end lock: CBG1□A Bore size — Stroke Z1 — R□

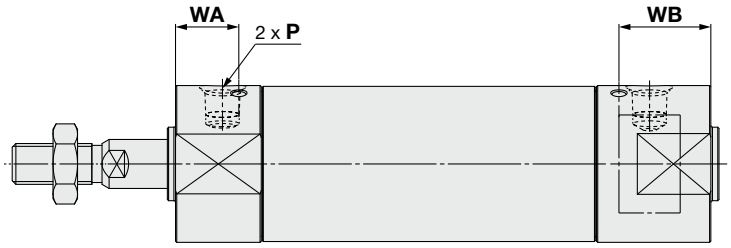

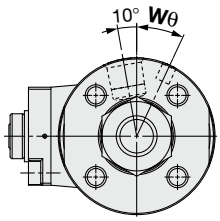

Head End Lock: –H□

[mm]

Bore size [mm]	P	WA	WB	Wθ
20	M5 x 0.8	16	24	25°
25	M5 x 0.8	13.5	25.5	25°
32	1/8	15.5	22.5	25°
40	1/8	18	28	20°
50	1/4	18	34	20°
63	1/4	18	34	20°
80	3/8	24	33	20°
100	1/2	20	33	20°

∗ For dimensions other than those listed above, refer to the dimensions with rubber bumper.

Rod End Lock: –R□

[mm]

Bore size [mm]	P	WA	WB	Wθ
20	M5 x 0.8	27	12	25°
25	M5 x 0.8	24.5	13.5	25°
32	1/8	25.5	12.5	25°
40	1/8	27	14	20°
50	1/4	30	17	20°
63	1/4	30	17	20°
80	3/8	33	20	20°
100	1/2	32	20	20°

∗ For dimensions other than those listed above, refer to the dimensions with rubber bumper.

Double end lock: CBG1□A Bore size — Stroke Z1 — W□

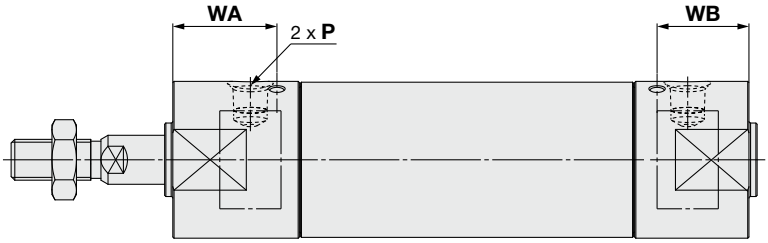

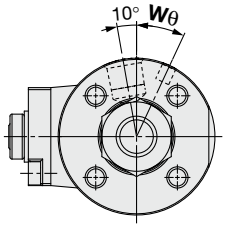

[mm]

Bore size [mm]	P	S	WA	WB	Wθ
20	M5 x 0.8	92	27	24	25°
25	M5 x 0.8	92	24.5	25.5	25°
32	1/8	91	25.5	22.5	25°
40	1/8	101	27	28	20°
50	1/4	119	30	34	20°
63	1/4	119	30	34	20°
80	3/8	146	33	33	20°
100	1/2	146	32	33	20°

∗ For dimensions other than those listed above, refer to the dimensions with rubber bumper.

With Mounting Bracket

(For dimensions other than those listed below, refer to pages 11, 12, and 34 to 36.)

Axial foot bracket/CBG1L□

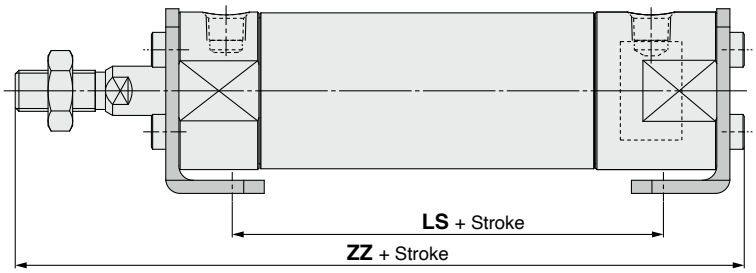

[mm]

Bore size [mm]	Head end lock/-H□			Rod end lock/-R□			Double end lock/-W□		
	LS	ZZ		LS	ZZ		LS	ZZ	
	—	Without rod boot	With rod boot	—	Without rod boot	With rod boot	—	Without rod boot	With rod boot
20	57	122	142 + ℓ	56	121	141 + ℓ	68	133	153 + ℓ
25	57	127.5	149.5 + ℓ	56	126.5	148.5 + ℓ	68	138.5	160.5 + ℓ
32	55	127.5	149.5 + ℓ	55	127.5	149.5 + ℓ	65	137.5	159.5 + ℓ
40	65	149	169 + ℓ	60	144	164 + ℓ	74	158	178 + ℓ
50	72	174.5	194.5 + ℓ	67	169.5	189.5 + ℓ	84	186.5	206.5 + ℓ
63	72	174.5	194.5 + ℓ	67	169.5	189.5 + ℓ	84	186.5	206.5 + ℓ
80	82	210.5	219.5 + ℓ	76	204.5	213.5 + ℓ	98	226.5	235.5 + ℓ
100	82	214	223 + ℓ	76	208	217 + ℓ	98	230	239 + ℓ

Rod flange/CBG1F□

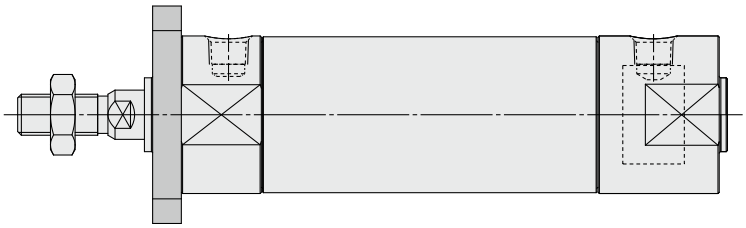

Head flange/CBG1G□

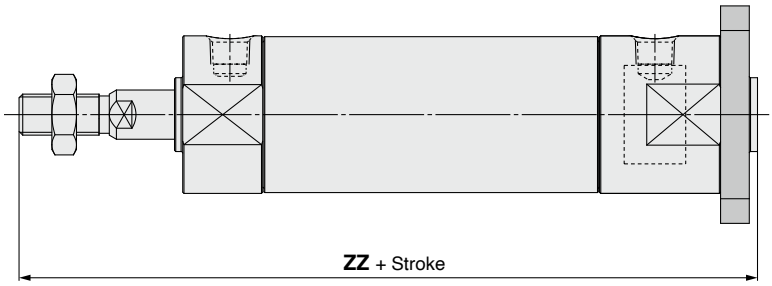

[mm]

Bore size [mm]	Head end lock/-H□		Rod end lock/-R□		Double end lock/-W□	
	ZZ (Head flange)					
	Without rod boot	With rod boot	Without rod boot	With rod boot	Without rod boot	With rod boot
20	124	144 + ℓ	123	143 + ℓ	135	155 + ℓ
25	130	152 + ℓ	129	151 + ℓ	141	163 + ℓ
32	130	152 + ℓ	130	152 + ℓ	140	162 + ℓ
40	152	172 + ℓ	147	167 + ℓ	161	181 + ℓ
50	176	196 + ℓ	171	191 + ℓ	188	208 + ℓ
63	176	196 + ℓ	171	191 + ℓ	188	208 + ℓ
80	215	224 + ℓ	209	218 + ℓ	231	240 + ℓ
100	218	227 + ℓ	212	221 + ℓ	234	243 + ℓ

With Mounting Bracket

Rod trunnion/CBG1U□
(Head end lock -H□ only)

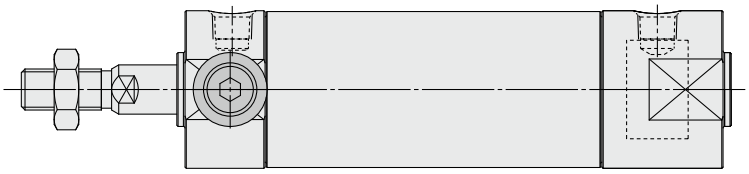

[mm]

Bore size [mm]	Rod end lock/-R□			
	Z (Head trunnion)		ZZ (Head trunnion)	
	Without rod boot	With rod boot	Without rod boot	With rod boot
20	104	124 + ℓ	117	137 + ℓ
25	109	131 + ℓ	122	144 + ℓ
32	111	133 + ℓ	123	145 + ℓ
40	127	147 + ℓ	139	159 + ℓ
50	148	168 + ℓ	162	182 + ℓ
63	148	168 + ℓ	162	182 + ℓ

Head trunnion/CBG1T□
(Rod end lock -R□ only)

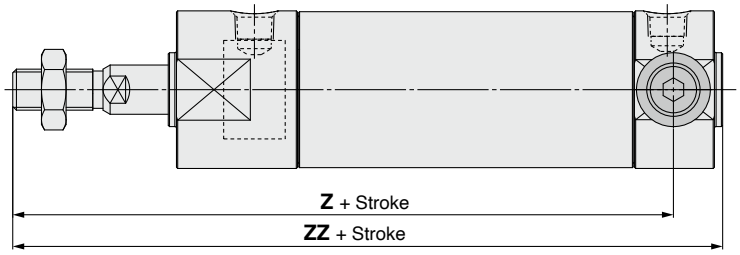

Clevis/CBG1D□
Ø 20 to Ø 63

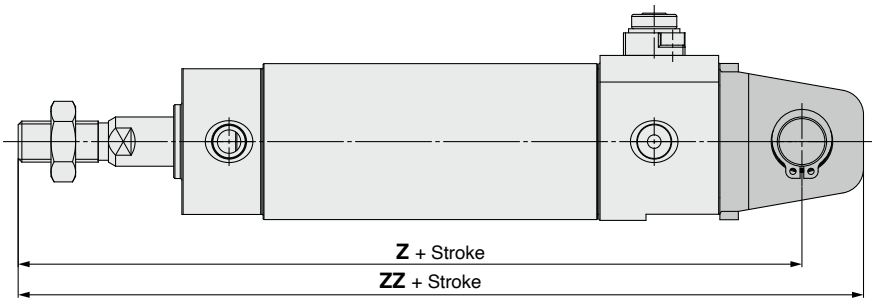

Clevis/CBG1D□
Ø 80 to Ø 100

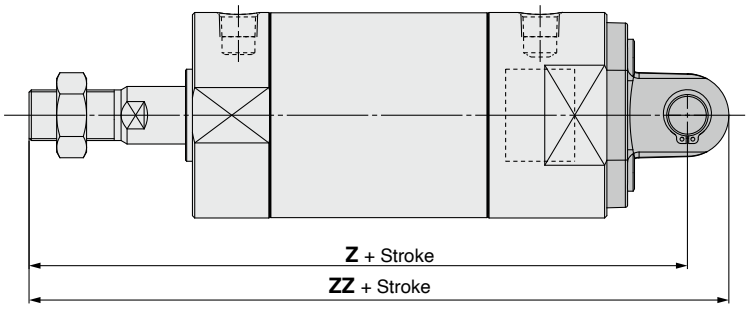

[mm]

Bore size [mm]	Head end lock/-H□				Rod end lock/-R□			
	Z		ZZ		Z		ZZ	
	Without rod boot	With rod boot	Without rod boot	With rod boot	Without rod boot	With rod boot	Without rod boot	With rod boot
20	130	150 + ℓ	141	161 + ℓ	129	149 + ℓ	140	160 + ℓ
25	137	159 + ℓ	150	172 + ℓ	136	158 + ℓ	149	171 + ℓ
32	141	163 + ℓ	156	178 + ℓ	141	163 + ℓ	156	178 + ℓ
40	164	184 + ℓ	182	202 + ℓ	159	179 + ℓ	177	197 + ℓ
50	190	210 + ℓ	210	230 + ℓ	185	205 + ℓ	205	225 + ℓ
63	195	215 + ℓ	217	237 + ℓ	190	210 + ℓ	212	232 + ℓ
80	236	245 + ℓ	254	263 + ℓ	230	239 + ℓ	248	257 + ℓ
100	244	253 + ℓ	266	275 + ℓ	238	247 + ℓ	260	269 + ℓ

Bore size [mm]	Double end lock/-W□			
	Z		ZZ	
	Without rod boot	With rod boot	Without rod boot	With rod boot
20	141	161 + ℓ	152	172 + ℓ
25	148	170 + ℓ	161	183 + ℓ
32	151	173 + ℓ	166	188 + ℓ
40	173	193 + ℓ	191	211 + ℓ
50	202	222 + ℓ	222	242 + ℓ
63	207	227 + ℓ	229	249 + ℓ
80	252	261 + ℓ	270	279 + ℓ
100	260	269 + ℓ	282	291 + ℓ

CG1 Series
D-M9, D-G5/K5, D-A9, D-B5/B6
Auto Switch Mounting

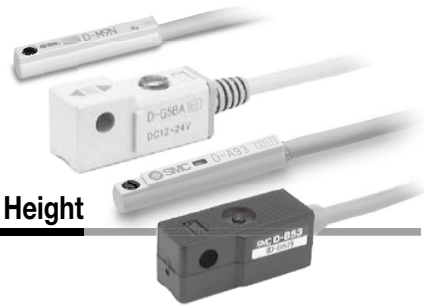

Auto Switch Proper Mounting Position (Detection at stroke end) and Mounting Height

Solid state auto switch
D-M9□, M9□W, M9□A
Ø 20 to Ø 63

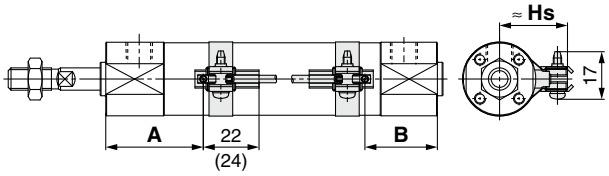

A and B are the dimensions from the end of the head cover/rod cover to the end of the auto switch.

Reed auto switch
D-A9□
Ø 20 to Ø 63

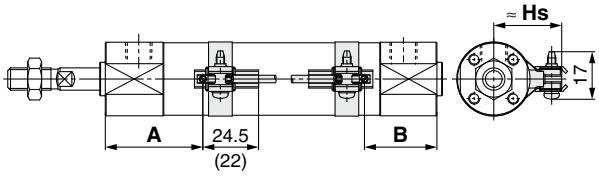

A and B are the dimensions from the end of the head cover/rod cover to the end of the auto switch.

D-M9□V, M9□WV, M9□AV
Ø 20 to Ø 63

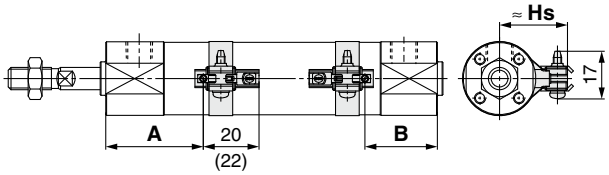

A and B are the dimensions from the end of the head cover/rod cover to the end of the auto switch.

D-A9□V
Ø 20 to Ø 63

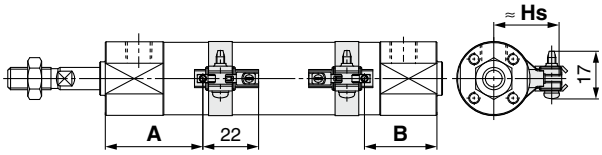

A and B are the dimensions from the end of the head cover/rod cover to the end of the auto switch.

D-G5□, G5□W, K59, K59W
D-G59F, G5BA, G5NT
Ø 20 to Ø 100

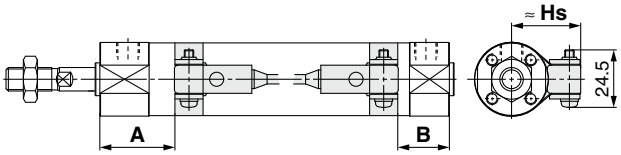

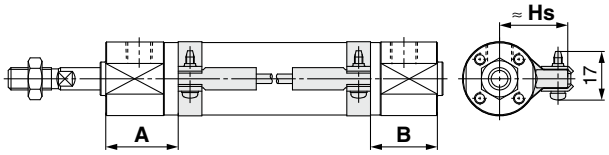

D-B5□, B64, B59W
Ø 20 to Ø 100

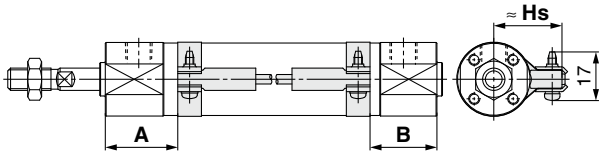

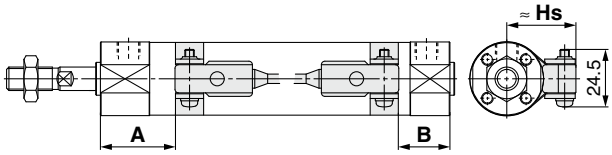

Auto Switch Proper Mounting Position (Detection at stroke end) and Mounting Height

Auto Switch Mounting Height

[mm]

Auto switch model / Bore size	D-M9□(V) D-M9□W(V) D-M9□A(V) D-A9□(V)	D-G5□ D-G5□W D-K59 D-K59W D-G59F D-G5BA D-G5NT D-B5□ D-B64 D-B59W
	Hs	Hs
20	26.5	27.5
25	29	30
32	32.5	33.5
40	37	38
50	42.5	43.5
63	49.5	50.5
80	—	59
100	—	69.5

CG1-Z1 (Rubber Bumper) Auto Switch Mounting Position (From the end of the cover)

[mm]

Auto switch model / Bore size	D-M9□(V) D-M9□W(V) D-M9□A(V)		D-A9□V		D-G5□ D-G5□W D-K59 D-K59W D-G59F D-G5BA D-G5NT		D-B5□ D-B64		D-B59W	
	A	B	A	B	A	B	A	B	A	B
20	29.5	27.5	25.5	23.5	21.5	19.5	20	19	23	21
25	29	28	25	24	21	20	19.5	19.5	22.5	21.5
32	29.5	29.5	25.5	25.5	21.5	21.5	20	20	23	23
40	33	33	29	29	25	25	23.5	23.5	26.5	26
50	39.5	38.5	35.5	34.5	31.5	30.5	30	29	33	32
63	39.5	38.5	35.5	34.5	31.5	30.5	30	29	33	32
80	—	—	—	—	43	37	41.5	35.5	44.5	38.5
100	—	—	—	—	41	39	39.5	37.5	42.5	40.5

∗ Adjust the auto switch after confirming the operating conditions in the actual setting.

CG1-Z1 (Air Cushion) Auto Switch Mounting Position (From the end of the cover)

[mm]

Auto switch model / Bore size	D-M9□(V) D-M9□W(V) D-M9□A(V)		D-A9□(V)		D-G5□ D-G5□W D-K59 D-K59W D-G59F D-G5BA D-G5NT		D-B5□ D-B64		D-B59W	
	A	B	A	B	A	B	A	B	A	B
20	30.5	26.5	26.5	22.5	22.5	18.5	21	17	24	20
25	29	28	25	24	21	20	19.5	19.5	22.5	21.5
32	31	28	27	24	23	20	21.5	18.5	24.5	21.5
40	35	31	31	27	27	23	25.5	21.5	28.5	24
50	40	38	36	34	32	30	30.5	28.5	33.5	31.5
63	40	38	36	34	32	30	30.5	28.5	33.5	31.5
80	—	—	—	—	43.5	36.5	42	35	45	37.5
100	—	—	—	—	42	38	40.5	36.5	43.5	39.5

Auto Switch Proper Mounting Position (Detection at stroke end) and Mounting Height

CG1-Z1 (Single Acting, Spring Return Type (S)) Auto Switch Mounting Position (From the end of the cover) [mm]

Auto switch model	Bore size	A				B
		Up to 50 st	51 to 100 st	101 to 125 st	126 to 200 st	
D-M9□(V) D-M9□W(V) D-M9□A(V)	20	54.5	79.5	104.5	—	27.5
	25	54	79	104	129	28
	32	54.5	79.5	104.5	129.5	29.5
	40	58	83	108	133	33
D-A9□(V)	20	50.5	75.5	100.5	—	23.5
	25	50	75	100	125	24
	32	50.5	75.5	100.5	125.5	25.5
	40	54	79	104	129	29
D-G5□ D-G5□W D-K59 D-K59W D-G59F D-G5BA D-G5NT	20	46.5	71.5	96.5	—	19.5
	25	46	71	96	121	20
	32	46.5	71.5	96.5	121.5	21.5
	40	50	75	100	125	25
D-B5□ D-B64	20	45	70	95	—	19
	25	44.5	69.5	94.5	119.5	19.5
	32	45	70	95	120	20
	40	48.5	73.5	98.5	123.5	23.5
D-B59W	20	48	73	98	—	21
	25	47.5	72.5	97.5	122.5	21.5
	32	48	73	98	123	23
	40	51.5	76.5	101.5	126.5	26

CG1-Z1 (Single Acting, Spring Extend Type (T)) Auto Switch Mounting Position (From the end of the cover) [mm]

Auto switch model	Bore size	A	B			
			Up to 50 st	51 to 100 st	101 to 125 st	126 to 200 st
D-M9□(V) D-M9□W(V) D-M9□A(V)	20	29.5	52.5	77.5	102.5	—
	25	29	53	78	103	128
	32	29.5	54.5	79.5	104.5	129.5
	40	33	58	83	108	133
D-A9□(V)	20	25.5	48.5	73.5	98.5	—
	25	25	49	74	99	124
	32	25.5	50.5	75.5	100.5	125.5
	40	29	54	79	104	129
D-G5□ D-G5□W D-K59 D-K59W D-G59F D-G5BA D-G5NT	20	21.5	44.5	69.5	94.5	—
	25	21	45	70	95	120
	32	21.5	46.5	71.5	96.5	121.5
	40	25	50	75	100	125
D-B5□ D-B64	20	20	44	69	94	—
	25	19.5	44.5	69.5	94.5	119.5
	32	20	45	70	95	120
	40	23.5	48.5	73.5	98.5	123.5
D-B59W	20	23	46	71	96	—
	25	22.5	46.5	71.5	96.5	121.5
	32	23	48	73	98	123
	40	26.5	51	76	101	126

Auto Switch Proper Mounting Position (Detection at stroke end) and Mounting Height

CG1R-Z1 (Rubber Bumper) Auto Switch Mounting Position (From the end of the cover)

[mm]

Auto switch model / Bore size	D-M9□(V) D-M9□W(V) D-M9□A(V)		D-A9□(V)		D-G5□ D-G5□W D-K59 D-K59W D-G59F D-G5BA D-G5NT		D-B5□ D-B64		D-B59W	
	A	**B**	**A**	**B**	**A**	**B**	**A**	**B**	**A**	**B**
20	35.5	27.5	31.5	23.5	27.5	19.5	26	19	29	21
25	37	28	33	24	29	20	27.5	19.5	30.5	21.5
32	41.5	29.5	37.5	25.5	33.5	21.5	32	20	35	23
40	49	33	45	29	41	25	39.5	23.5	42.5	26
50	57.5	38.5	53.5	34.5	49.5	30.5	48	29	51	32
63	63.5	38.5	59.5	34.5	55.5	30.5	54	29	57	32

CG1R-Z1 (Air Cushion) Auto Switch Mounting Position (From the end of the cover)

[mm]

Auto switch model / Bore size	D-M9□(V) D-M9□W(V) D-M9□A(V)		D-A9□(V)		D-G5□ D-G5□W D-K59 D-K59W D-G59F D-G5BA D-G5NT		D-B5□ D-B64		D-B59W	
	A	**B**	**A**	**B**	**A**	**B**	**A**	**B**	**A**	**B**
20	36.5	26.5	32.5	22.5	28.5	18.5	27	17	30	20
25	37	28	33	24	29	20	27.5	19.5	30.5	21.5
32	43	28	39	24	35	20	33.5	18.5	36.5	21.5
40	51	31	47	27	43	23	41.5	21.5	44.5	24
50	58	38	54	34	50	30	48.5	28.5	51.5	31.5
63	64	38	60	34	56	30	54.5	28.5	57.5	31.5

Auto Switch Proper Mounting Position (Detection at stroke end) and Mounting Height

CBG1-Z1 (Rubber Bumper) Auto Switch Mounting Position

[mm]

Bore size \ Auto switch model	Lock position	D-M9□(V) D-M9□W(V) D-M9□A(V)		D-A9□(V)		D-G5□ D-G5□W D-K59 D-K59W D-G59F D-G5BA D-G5NT		D-B5□ D-B64		D-B59W	
		A	B	A	B	A	B	A	B	A	B
20	Rod end	40.5	27.5	36.5	23.5	32.5	19.5	31	19	34	21
	Head end	29.5	39.5	25.5	35.5	21.5	31.5	20	31	23	33
	Double end	40.5	39.5	36.5	35.5	32.5	31.5	31	31	34	33
25	Rod end	40	28	36	24	32	20	30.5	19.5	33.5	21.5
	Head end	29	40	25	36	21	32	19.5	31.5	22.5	33.5
	Double end	40	40	36	36	32	32	30.5	31.5	33.5	33.5
32	Rod end	39.5	29.5	35.5	25.5	31.5	21.5	30	20	33	23
	Head end	29.5	39.5	25.5	35.5	21.5	31.5	20	30	23	33
	Double end	39.5	39.5	35.5	35.5	31.5	31.5	30	30	33	33
40	Rod end	42	33	38	29	34	25	32.5	23.5	35.5	26
	Head end	33	47	29	43	25	39	23.5	37.5	26.5	40
	Double end	42	47	38	43	34	39	32.5	37.5	35.5	40
50	Rod end	51.5	38.5	47.5	34.5	43.5	30.5	42	29	45	32
	Head end	39.5	55.5	35.5	51.5	31.5	47.5	30	46	33	49
	Double end	51.5	55.5	47.5	51.5	43.5	47.5	42	46	45	49
63	Rod end	51.5	38.5	47.5	34.5	43.5	30.5	42	29	45	32
	Head end	39.5	55.5	35.5	51.5	31.5	47.5	30	46	33	49
	Double end	51.5	55.5	47.5	51.5	43.5	47.5	42	46	45	49
80	Rod end	—	—	—	—	59	37	57.5	35.5	60.5	38.5
	Head end					43	59	41.5	57.5	44.5	60.5
	Double end					59	59	57.5	57.5	60.5	60.5
100	Rod end	—	—	—	—	57	39	55.5	37.5	58.5	40.5
	Head end					41	61	39.5	59.5	42.5	62.5
	Double end					57	61	55.5	59.5	58.5	62.5

CBG1-Z1 (Air Cushion) Auto Switch Mounting Position

[mm]

Bore size \ Auto switch model	Lock position	D-M9□(V) D-M9□W(V) D-M9□A(V)		D-A9□(V)		D-G5□ D-G5□W D-K59 D-K59W D-G59F D-G5BA D-G5NT		D-B5□ D-B64		D-B59W	
		A	B	A	B	A	B	A	B	A	B
20	Rod end	41.5	26.5	37.5	22.5	33.5	18.5	32	17	35	20
	Head end	30.5	38.5	26.5	34.5	22.5	30.5	21	29	24	32
	Double end	41.5	38.5	37.5	34.5	33.5	30.5	32	29	35	32
25	Rod end	40	28	36	24	32	20	30.5	19.5	33.5	21.5
	Head end	29	40	25	36	21	32	19.5	31.5	22.5	33.5
	Double end	40	40	36	36	32	32	30.5	31.5	33.5	33.5
32	Rod end	41	28	37	24	33	20	31.5	18.5	34.5	21.5
	Head end	31	38	27	34	23	30	21.5	28.5	24.5	31.5
	Double end	41	38	37	34	33	30	31.5	28.5	34.5	31.5
40	Rod end	44	31	40	27	36	23	34.5	21.5	37.5	24
	Head end	35	45	31	41	27	37	25.5	35.5	28.5	38
	Double end	44	45	40	41	36	37	34.5	35.5	37.5	38
50	Rod end	52	38	48	34	44	30	42.5	28.5	45.5	31.5
	Head end	40	55	36	51	32	47	30.5	45.5	33.5	48.5
	Double end	52	55	48	51	44	47	42.5	45.5	45.5	48.5
63	Rod end	52	38	48	34	44	30	42.5	28.5	45.5	31.5
	Head end	40	55	36	51	32	47	30.5	45.5	33.5	48.5
	Double end	52	55	48	51	44	47	42.5	45.5	45.5	48.5
80	Rod end	—	—	—	—	59.5	36.5	58	35	61	37.5
	Head end					43.5	58.5	42	57	45	59.5
	Double end					59.5	58.5	58	57	61	59.5
100	Rod end	—	—	—	—	58	38	56.5	36.5	59.5	39.5
	Head end					42	60	40.5	58.5	43.5	61.5
	Double end					58	60	56.5	58.5	59.5	61.5

Minimum Stroke for Auto Switch Mounting

n: Number of auto switches [mm]

Auto switch model	Number of auto switches				
	With 1 pc.	With 2 pcs.		With n pcs.	
		Different surfaces	Same surface	Different surfaces	Same surface
D-M9□	5	15*1	40*1	$20 + 35\frac{(n-2)}{2}$ (n = 2, 4, 6···)*3	55 + 35 (n – 2) (n = 2, 3, 4, 5···)
D-M9□W	10	15*1	40*1	$20 + 35\frac{(n-2)}{2}$ (n = 2, 4, 6···)*3	55 + 35 (n – 2) (n = 2, 3, 4, 5···)
D-M9□A	10	25	40*1	$25 + 35\frac{(n-2)}{2}$ (n = 2, 4, 6···)*3	60 + 35 (n – 2) (n = 2, 3, 4, 5···)
D-A9□	5	15	30*1	$15 + 35\frac{(n-2)}{2}$ (n = 2, 4, 6···)*3	50 + 35 (n – 2) (n = 2, 3, 4, 5···)
D-M9□V	5	20	35	$20 + 35\frac{(n-2)}{2}$ (n = 2, 4, 6···)*3	35 + 35 (n – 2) (n = 2, 3, 4, 5···)
D-A9□V	5	15	25	$15 + 35\frac{(n-2)}{2}$ (n = 2, 4, 6···)*3	25 + 35 (n – 2) (n = 2, 3, 4, 5···)
D-M9□WV **D-M9□AV**	10	20	35	$20 + 35\frac{(n-2)}{2}$ (n = 2, 4, 6···)*3	35 + 35 (n – 2) (n = 2, 3, 4, 5···)
D-G5□ **D-G5□W** **D-K59** **D-K59W** **D-G59F** **D-G5BA** **D-G5NT** **D-B5□** **D-B64**	5	20	75	$20 + 50\frac{(n-2)}{2}$ (n = 2, 4, 6···)*3	75 + 55 (n – 2) (n = 2, 3, 4, 5···)
D-B59W	10	20	70	$20 + 50\frac{(n-2)}{2}$ (n = 2, 4, 6···)*3	70 + 50 (n – 2) (n = 2, 3, 4, 5···)

*3 When "n" is an odd number, an even number that is one larger than the odd number is to be used for the calculation.

*1 Auto switch mounting

Auto switch model	With 2 auto switches	
	Different surfaces*1	Same surface*1
	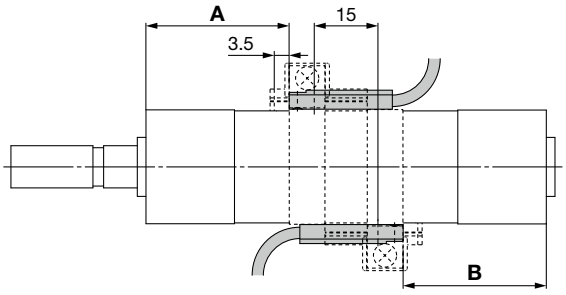 Correct auto switch mounting position is 3 . 5 mm from the back face of the switch holder.	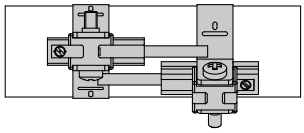 The auto switch is mounted by slightly displacing it in a direction (cylinder tube circumferential exterior) so that the auto switch and lead wire do not interfere with each other.
D-M9□ **D-M9□W**	Less than 20 mm stroke*2	Less than 55 mm stroke*2
D-M9□A	Less than 20 mm stroke*2	Less than 60 mm stroke*2
D-A9□	—	Less than 50 mm stroke*2

*2 Minimum stroke for auto switch mounting in types other than those mentioned in *1

Auto Switch Mounting Brackets/Part Nos.

Auto switch model	Bore size (mm)							
	20	25	32	40	50	63	80	100
D-M9□(V) **D-M9□W(V)** **D-A9□(V)**	∗1 BMA3-020 (A set of a, b, c, d)	∗1 BMA3-025 (A set of a, b, c, d)	∗1 BMA3-032 (A set of a, b, c, d)	∗1 BMA3-040 (A set of a, b, c, d)	∗1 BMA3-050 (A set of a, b, c, d)	∗1 BMA3-063 (A set of a, b, c, d)	—	—
D-M9□A(V)∗2	BMA3-020S (A set of b, c, e, f)	BMA3-025S (A set of b, c, e, f)	BMA3-032S (A set of b, c, e, f)	BMA3-040S (A set of b, c, e, f)	BMA3-050S (A set of b, c, e, f)	BMA3-063S (A set of b, c, e, f)	—	—

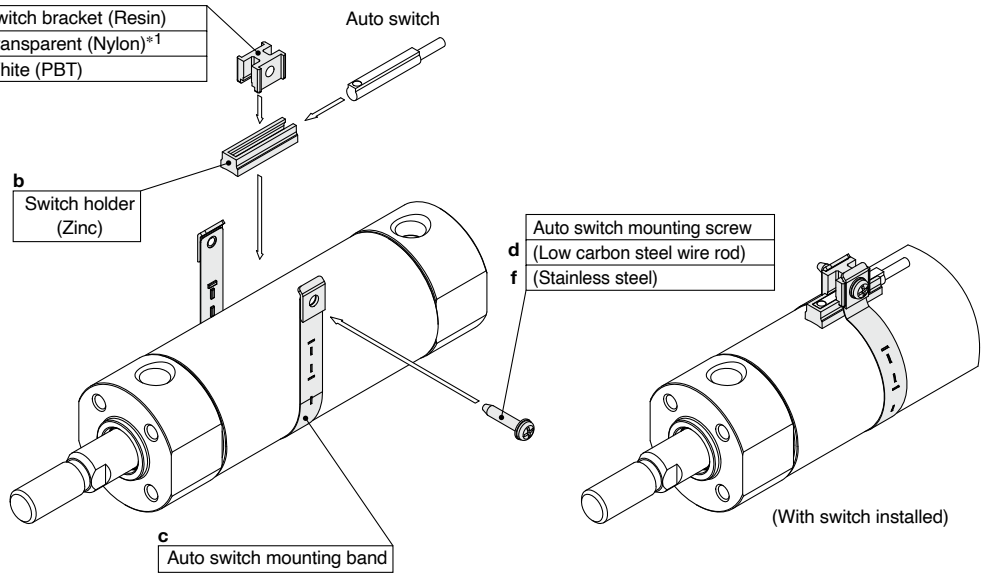

∗ Band (c) is mounted so that the projected part is on the internal side (contact side with the tube).

D-G5□/K59 **D-G5□W/K59W** **D-G5BA/G59F** **D-G5NT** **D-B5□/B64** **D-B59W**	BA-01 (A set of c and d)	BA-02 (A set of c and d)	BA-32 (A set of c and d)	BA-04 (A set of c and d)	BA-05 (A set of c and d)	BA-06 (A set of c and d)	BA-08 (A set of c and d)	BA-10 (A set of c and d)

∗1 The switch bracket (made of polyamide) is not to be used in environments where it could be exposed to chemicals (in particular, alcohol, chloroform, methylamine, hydrochloric acid, sulphuric acid, etc.), as they may affect the performance.
∗2 When mounting a D-M9□A(V) type auto switch, if the switch bracket is mounted on the indicator light, it may damage the auto switch. Therefore, be sure to avoid mounting the switch bracket on the indicator light.

Band Mounting Brackets Set Part Nos.

Set part no.	Contents
BJ4-1	· Switch bracket (White/PBT) (e) · Switch holder (b)
BJ5-1	· Switch bracket (Transparent/Polyamide) (a) · Switch holder (b)

[Stainless Steel Mounting Screw]

The following stainless steel mounting screw kit is available. Use it in accordance with the operating environment.
(Since the auto switch mounting bracket is not included, order it separately.)
BBA3: D-B5/B6/G5/K5 types

∗ Refer to the **catalogue on www.smc.eu** for details on the BBA3.
When the D-G5BA type auto switch is shipped independently, the BBA3 is attached.

Operating Range

[mm]

Auto switch model	Bore size							
	20	**25**	**32**	**40**	**50**	**63**	**80**	**100**
D-M9□(V) **D-M9□W(V)** **D-M9□A(V)**	4.5	5	4.5	5.5	5	5.5	—	—
D-A9□(V)	7	6	8	8	8	9	—	—
D-G5□/G5□W **D-K59/K59W** **D-G59F/G5BA/G5NT**	4	4	4.5	5	6	6.5	6.5	7
D-B5□/B64	8	10	9	10	10	11	11	11
D-B59W	13	13	14	14	14	17	16	18

∗ Values which include hysteresis are for reference purposes only. They are not a guarantee (assuming approx. ±30 % dispersion) and may change substantially depending on the ambient environment.

Cylinder Mounting Bracket, by Stroke/Auto Switch Mounting Surfaces

st: Stroke [mm]

Auto switch model	Basic, Foot, Flange, Clevis			Trunnion		
	With 1 pc. (Rod cover side)	With 2 pcs. (Different surfaces)	With 2 pcs. (Same surface)	With 1 pc. (Rod cover side)	With 2 pcs. (Different surfaces)	With 2 pcs. (Same surface)
Auto switch mounting surface / Auto switch model	Port surface	Port surface	Port surface			
D-M9□(V) **D-M9□W(V)** **D-M9□A(V)** **D-A9□(V)**	10 st or more	15 to 44 st	45 st or more	10 st or more	15 to 44 st	45 st or more
D-G5□/G5□W **D-K59/K59W** **D-G59F/G5BA/G5NT** **D-B5□/B64**	10 st or more	15 to 74 st	75 st or more	10 st or more	15 to 74 st	75 st or more
D-B59W	15 st or more	20 to 74 st	75 st or more	15 st or more	20 to 74 st	75 st or more

∗ Trunnion type is not available for Ø 80 and Ø 100.
∗ Adjust the auto switch mounting angle according to the customer's application.

CG1 Series
D-H7, D-C7/C8
Auto Switch Mounting

Other than the applicable auto switches listed in "How to Order," the following auto switches are also mountable.
Refer to the **catalogue on www.smc.eu** for detailed specifications.

Type	Model	Electrical entry	Features	Applicable bore size
Solid state	D-H7A1, H7A2, H7B	Grommet (In-line)	—	Ø 20 to Ø 63
	D-H7NW, H7PW, H7BW		Diagnostic indication (2-colour indicator)	
	D-H7NF		With diagnostic output (2-colour indicator)	
	D-H7BA		Water resistant (2-colour indicator)	
	D-G59, G5P, K59		—	
	D-G59W, G5PW, K59W		Diagnostic indication (2-colour indicator)	
	D-G59F		With diagnostic output (2-colour indicator)	
	D-G5BA		Water resistant (2-colour indicator)	
	D-G5NT		With timer	
Reed	D-C73, C76	Grommet (In-line)	—	Ø 20 to Ø 63
	D-C80		Without indicator light	
	D-B53, B54		—	
	D-B64		Without indicator light	
	D-B59W		Diagnostic indication (2-colour indicator)	

∗ With pre-wired connector is also available for solid state auto switches. For details, refer to the **catalogue on www.smc.eu**.
∗ Normally closed (NC = b contact) solid state auto switches (D-M9□E(V)) are also available. For details, refer to the **catalogue on www.smc.eu**.

Auto Switch Proper Mounting Position (Detection at stroke end) and Mounting Height

Solid state auto switch
D-H7□, H7□W
D-H7NF, H7BA
Ø 20 to Ø 63

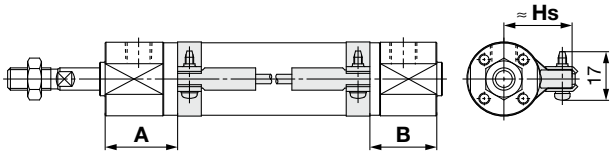

Reed auto switch
D-C7□, C80
Ø 20 to Ø 63

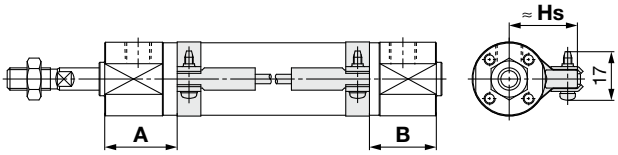

CG1-Z1 (Rubber Bumper) Auto Switch Mounting Position (From the end of the cover) [mm]

Auto switch model / Bore size	D-H7□ D-H7□W	D-H7NF D-H7BA	D-C7□ D-C80	
	A	B	A	B
20	25	23	26	24
25	24.5	23.5	25.5	24.5
32	25	25	26	26
40	28.5	28.5	29.5	29.5
50	35	34	36	35
63	35	34	36	35

∗ Adjust the auto switch after confirming the operating conditions in the actual setting.

Auto Switch Mounting Height [mm]

Auto switch model / Bore size	D-H7□ D-H7□W D-H7NF	D-H7BA D-C7□ D-C80
	Hs	
20	26.5	
25	29	
32	32.5	
40	37	
50	42.5	
63	49.5	

CG1-Z1 (Air Cushion) Auto Switch Mounting Position (From the end of the cover) [mm]

Auto switch model / Bore size	D-H7□ D-H7□W	D-H7NF D-H7BA	D-C7□ D-C80	
	A	B	A	B
20	26	22	27	23
25	24.5	23.5	25.5	24.5
32	26.5	23.5	27.5	24.5
40	30.5	26.5	31.5	27.5
50	35.5	33.5	36.5	34.5
63	35.5	33.5	36.5	34.5

Auto Switch Proper Mounting Position (Detection at stroke end) and Mounting Height

CG1-Z1 (Single Acting, Spring Return Type (S)) Auto Switch Mounting Position (From the end of the cover) [mm]

Auto switch model	Bore size	A				B
		Up to 50 st	51 to 100 st	101 to 125 st	126 to 200 st	
D-H7□ D-H7□W D-H7NF D-H7BA	20	50	75	100	—	23
	25	49.5	74.5	99.5	124.5	23.5
	32	50	75	100	125	25
	40	53.5	78.5	103.5	128.5	28.5
D-C7□ D-C80	20	51	76	101	—	24
	25	50.5	75.5	100.5	125.5	24.5
	32	51	76	101	126	26
	40	54.5	79.5	104.5	129.5	29.5

CG1-Z1 (Single Acting, Spring Extend Type (T)) Auto Switch Mounting Position (From the end of the cover) [mm]

Auto switch model	Bore size	A	B			
			Up to 50 st	51 to 100 st	101 to 125 st	126 to 200 st
D-H7□ D-H7□W D-H7NF D-H7BA	20	25	48	73	98	—
	25	24.5	48.5	73.5	98.5	123.5
	32	25	50	75	100	125
	40	28.5	53.5	78.5	103.5	128.5
D-C7□ D-C80	20	26	49	74	99	—
	25	25.5	49.5	74.5	99.5	124.5
	32	26	51	76	101	126
	40	29.5	54.5	79.5	104.5	129.5

CG1R-Z1 (Rubber Bumper) Auto Switch Mounting Position (From the end of the cover) [mm]

Auto switch model / Bore size	D-H7□ D-H7□W D-H7NF D-H7BA		D-C7□ D-C80	
	A	B	A	B
20	31	23	32	24
25	32.5	23.5	33.5	24.5
32	37	25	38	26
40	44.5	28.5	45.5	29.5
50	53	34	54	35
63	59	34	60	35

CG1R-Z1 (Air Cushion) Auto Switch Mounting Position (From the end of the cover) [mm]

Auto switch model / Bore size	D-H7□ D-H7□W D-H7NF D-H7BA		D-C7□ D-C80	
	A	B	A	B
20	32	22	33	23
25	32.5	23.5	33.5	24.5
32	38.5	23.5	39.5	24.5
40	46.5	26.5	47.5	27.5
50	53.5	33.5	54.5	34.5
63	59.5	33.5	60.5	34.5

CBG1-Z1 (Rubber Bumper) Auto Switch Mounting Position [mm]

Auto switch model / Bore size	Lock position	D-H7□ D-H7□W D-H7NF D-H7BA		D-C7□ D-C80	
		A	B	A	B
20	Rod end	36	23	37	24
	Head end	25	35	26	36
	Double end	36	35	37	36
25	Rod end	35.5	23.5	36.5	24.5
	Head end	24.5	35.5	25.5	36.5
	Double end	35.5	35.5	36.5	36.5
32	Rod end	35	25	36	26
	Head end	25	35	26	36
	Double end	35	35	36	36
40	Rod end	37.5	28.5	38.5	29.5
	Head end	28.5	42.5	29.5	43.5
	Double end	37.5	42.5	38.5	43.5
50	Rod end	47	34	48	35
	Head end	35	51	36	52
	Double end	47	51	48	52
63	Rod end	47	34	48	35
	Head end	35	51	36	52
	Double end	47	51	48	52

CBG1-Z1 (Air Cushion) Auto Switch Mounting Position [mm]

Auto switch model / Bore size	Lock position	D-H7□ D-H7□W D-H7NF D-H7BA		D-C7□ D-C80	
		A	B	A	B
20	Rod end	37	22	38	23
	Head end	26	34	27	35
	Double end	37	34	38	35
25	Rod end	35.5	23.5	36.5	24.5
	Head end	24.5	35.5	25.5	36.5
	Double end	35.5	35.5	36.5	36.5
32	Rod end	36.5	23.5	37.5	24.5
	Head end	26.5	33.5	27.5	34.5
	Double end	36.5	33.5	37.5	34.5
40	Rod end	39.5	26.5	40.5	27.5
	Head end	30.5	40.5	31.5	41.5
	Double end	39.5	40.5	40.5	41.5
50	Rod end	47.5	33.5	48.5	34.5
	Head end	35.5	50.5	36.5	51.5
	Double end	47.5	50.5	48.5	51.5
63	Rod end	47.5	33.5	48.5	34.5
	Head end	35.5	50.5	36.5	51.5
	Double end	47.5	50.5	48.5	51.5

Minimum Stroke for Auto Switch Mounting

n: Number of auto switches [mm]

Auto switch model	Number of auto switches				
	With 1 pc.	With 2 pcs.		With n pcs.	
		Different surfaces	Same surface	Different surfaces	Same surface
D-H7□ **D-H7□W** **D-H7NF** **D-H7BA**	10	15	60	$15 + 45\frac{(n-2)}{2}$ (n = 2, 4, 6···)*1	60 + 45 (n – 2) (n = 2, 3, 4, 5···)
D-C7□ **D-C80**	5	15	50	$15 + 45\frac{(n-2)}{2}$ (n = 2, 4, 6···)*1	50 + 45 (n – 2) (n = 2, 3, 4, 5···)

*1 When "n" is an odd number, an even number that is one larger than the odd number is to be used for the calculation.

Auto Switch Mounting Brackets/Part Nos.

Auto switch model	Bore size [mm]					
	20	**25**	**32**	**40**	**50**	**63**
D-H7□ **D-H7□W** **D-H7NF** **D-C7□** **D-C80**	BMA2-020A	BMA2-025A	BMA2-032A	BMA2-040A	BMA2-050A	BMA2-063A
D-H7BA	BMA2-020AS	BMA2-025AS	BMA2-032AS	BMA2-040AS	BMA2-050AS	BMA2-063AS

Operating Range

[mm]

Auto switch model	Bore size					
	20	**25**	**32**	**40**	**50**	**63**
D-H7□/H7□W **D-H7NF/H7BA**	4	4	4.5	5	6	6.5
D-C7□/C80	8	10	9	10	10	11

* Values which include hysteresis are for reference purposes only. They are not a guarantee (assuming approx. ±30 % dispersion) and may change substantially depending on the ambient environment.

Cylinder Mounting Bracket, by Stroke/Auto Switch Mounting Surfaces

st: Stroke [mm]

Auto switch model	Basic, Foot, Flange, Clevis			Trunnion		
	With 1 pc. (Rod cover side)	With 2 pcs. (Different surfaces)	With 2 pcs. (Same surface)	With 1 pc. (Rod cover side)	With 2 pcs. (Different surfaces)	With 2 pcs. (Same surface)
Auto switch mounting surface / Auto switch model	Port surface 	Port surface 	Port surface 			
D-H7□/H7□W **D-H7NF/H7BA**	10 st or more	15 to 59 st	60 st or more	10 st or more	15 to 59 st	60 st or more
D-C7□/C80	10 st or more	15 to 49 st	50 st or more	10 st or more	15 to 49 st	50 st or more

* Trunnion type is not available for Ø 80 and Ø 100.
* Adjust the auto switch mounting angle according to the customer's application.

Made to Order: Individual Specifications

Please contact SMC for detailed dimensions, specifications, and lead times.

Made to Order

1 PTFE Grease

Symbol **-X446**

Applicable to environments incompatible with mineral oil. PTFE grease (fluorine grease) is used as the lubricating grease.

Applicable Series

Series	Description	Model	Action	Note
CG1	Standard	CG1-Z1	Double acting, Single rod	Excludes the type with an air cushion

How to Order

Standard model no. – X446

PTFE grease

Specifications: Same as those of the standard type
Dimensions: Same as those of the standard type

∗ When grease is necessary for maintenance, order the grease pack separately.
Grease pack part number: GR-F-005 (Grease: 5 g)

2 Interchangeable for Long Strokes for Existing Bore Size

Symbol **-X3252**

Same length as the long strokes of exiting CG1-Z series

Applicable Series

Series	Description	Model	Action	Note
CG1	Standard	CG1-Z1	Double acting, Single rod	

How to Order

Standard model no. – X3252

Interchangeable for long strokes for existing bore size

Specifications

Bore size [mm]	20	25 to 100
Stroke [mm]	201 to 1500	301 to 1500
Specifications other than the above	Same as those of the standard type	

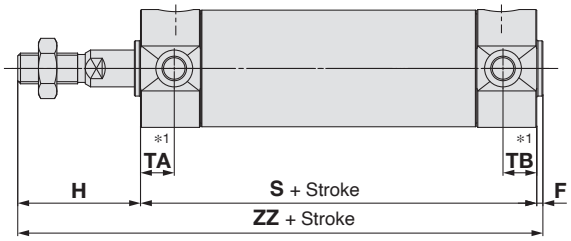

∗1 Indicates the dimension with a trunnion mounting female thread

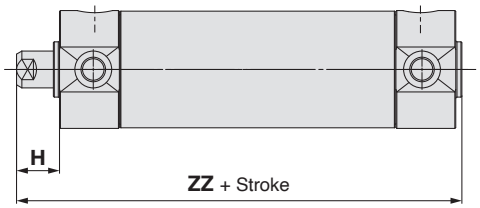

[mm]

Bore size	Stroke range [mm]	F	H	∗1 TA	∗1 TB	S	ZZ
20	201 to 1500	2	35	11	11	77	114
25	301 to 1500	2	40	11	11	77	119
32		2	40	11	11	79	121
40		2	50	12	12	87	139
50		2	58	13	13	102	162
63		2	58	13	13	102	162
80		3	71	—	—	122	196
100		3	71	—	—	122	196

Female Rod End

[mm]

Bore size	H	ZZ
20	13	92
25	14	93
32	14	95
40	15	104
50	16	120
63	16	120
80	19	144
100	22	147

CG1 Series
Specific Product Precautions

Be sure to read this before handling the products. Refer to the back cover for safety instructions. For actuator and auto switch precautions, refer to the "Handling Precautions for SMC Products" and the "Operation Manual" on the SMC website: https://www.smc.eu

<Precautions on each series>

Handling

⚠Warning

1. **Do not operate the cushion valve in the fully closed or fully opened state.**
   Using it in the fully closed state will cause the cushion seal to be damaged. Using it in the fully opened state will cause the piston rod assembly or the cover to be damaged.
2. **Do not turn the cushion valve the number of rotations shown below or more from its fully closed state.**
   If it is turned the number of rotations shown below or more, the cushion valve may come off.

Bore size [mm]	Rotations	Hexagon wrench nominal size
20	2	1.5
25	4.5	1.5
32	4.5	1.5
40	5	1.5
50	3	3
63	4.5	3
80	5	4
100	5	4

3. **Do not open the cushion valve after rotating it numerous times in a row. Though uncommon, there are cases in which the cushion valve may leak air.**
   The cushion valve should be adjusted by gradually opening it while checking the operation of the cylinder cushion. In the unlikely event that air leakage occurs, return the cushion needle to the fully-closed state, and readjust the cushion needle to the desired position.
4. **Operate within the specified cylinder speed and kinetic energy.**
   Otherwise, cylinder and seal damage may occur.
5. **When a cylinder is operated with one end fixed and other free (basic, flange types), a bending moment may act on the cylinder due to the vibration generated at the stroke end, which can damage the cylinder. In such a case, install a mounting bracket to suppress the vibration of the cylinder body or reduce the piston speed so that the cylinder does not vibrate. Also, use a mounting bracket to suppress vibrations when moving the cylinder body or when a cylinder is operated horizontally and fixed at one end at a high speed and frequency.**

⚠Caution

1. **Use caution regarding the cushion performance in the low-speed range.**
   There may be individual performance and effect variances when used near 50 mm/s.
2. **Do not use the air cylinder as an air-hydro cylinder.**
   This may result in oil leak.
3. **Install a rod boot without twisting.**
   If the cylinder is installed with its bellows twisted, it could damage the bellows.
4. **The oil stuck to the cylinder is grease.**
5. **There is a possibility that the base oil of grease seeps out. The installation of the protective cover is recommended.**

CBG1 Series
Specific Product Precautions 1

Be sure to read this before handling the products. Refer to the back cover for safety instructions. For actuator and auto switch precautions, refer to the "Handling Precautions for SMC Products" and the "Operation Manual" on the SMC website: https://www.smc.eu

<End Lock Cylinder Precautions>

Use the Recommended Pneumatic Circuit

⚠Caution

- **This is necessary for proper operation and release of the lock.**

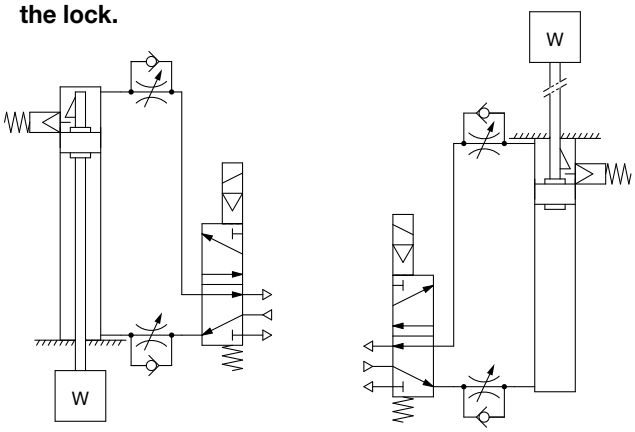

Head end lock　　Rod end lock

Handling

⚠Caution

1. **Do not use 3 position solenoid valves.**
   Avoid use in combination with 3 position solenoid valves (especially closed centre metal seal types). If pressure is trapped in the port on the lock mechanism side, the cylinder cannot be locked. Furthermore, even after being locked, the lock may be released after some time, due to air leaking from the solenoid valve and entering the cylinder.
2. **Back pressure is required when releasing the lock.**
   Be sure air is supplied to the side of the cylinder without a lock mechanism, (side of the piston rod without lock for double end lock), before starting up, as in the above figures. Otherwise, the lock may not be released. (Refer to "Releasing the Lock".)
3. **Release the lock when mounting or adjusting the cylinder.**
   If mounting or other work is performed when the cylinder is locked, the lock unit may be damaged.
4. **Operate with a load ratio of 50 % or less.**
   If the load ratio exceeds 50 %, this may cause problems such as failure of the lock to release, or damage to the lock unit.
5. **Do not operate multiple cylinders in synchronization.**
   Avoid applications in which two or more cylinders with end lock are synchronized to move one workpiece, as one of the cylinder locks may not be able to release when required.
6. **Use a speed controller with meter-out control.**
   Lock cannot be released occasionally by meter-in control.
7. **Be sure to operate completely to the cylinder stroke end on the side with the lock.**
   If the cylinder piston does not reach the end of the stroke, locking and unlocking may not be possible.
8. **Adjust an auto switch position so that it operates for movement to both the stroke end and backlash (2 mm) positions.**
   When a 2-colour indicator switch is adjusted for green indication at the stroke end, it may change to red for the backlash return, but this is not abnormal.

Operating Pressure

⚠Caution

1. Supply air pressure of 0.15 MPa or higher to the port on the lock mechanism side, as it is necessary for releasing the lock.

Exhaust Speed

⚠Caution

1. The lock will be engaged automatically if the pressure applied to the port on the lock mechanism side falls to 0.05 MPa or less. In cases where the piping on the lock mechanism side is long and thin, or the speed controller is separated at some distance from the cylinder port, the exhaust speed will be reduced. Take note that some time may be required for the lock to engage. In addition, clogging of a silencer mounted on the solenoid valve exhaust port can produce the same effect.

Relation to Cushion

⚠Caution

1. When cushion valve at lock mechanism side is fully opened or closed, piston rod may not be reached at stroke end. Thus, lock is not established. And when locking is done at cushion valve fully closed, adjust cushion valve since lock may not be released.

Releasing the Lock

⚠Warning

1. Before releasing the lock, be sure to supply air to the side without a lock mechanism, so that there is no load applied to the lock mechanism when it is released. (Refer to the recommended pneumatic circuits.) If the lock is released when the port on the other side is in an exhaust state, and with a load applied to the lock unit, the lock unit may be subjected to an excessive force and be damaged. Furthermore, sudden movement of the piston rod is very dangerous.

CBG1 Series
Specific Product Precautions 2

Be sure to read this before handling the products. Refer to the back cover for safety instructions. For actuator and auto switch precautions, refer to the "Handling Precautions for SMC Products" and the "Operation Manual" on the SMC website: https://www.smc.eu

Manual Release

⚠Caution

1. Non-locking type manual release

Insert the accessory bolt from the top of the rubber cap (it is not necessary to remove the rubber cap), and after screwing it into the lock piston, pull it to release the lock. If you stop pulling the bolt, the lock will return to an operational state.

Thread sizes, pulling forces and strokes are as shown below.

Bore size [mm]	Thread size	Pulling force	Stroke [mm]
20, 25, 32	M2.5 x 0.45 x 25 L or more	4.9 N	2
40, 50, 63	M3 x 0.5 x 30 L or more	10 N	3
80, 100	M5 x 0.8 x 40 L or more	24.5 N	3

Remove the bolt for normal operation.
It can cause lock malfunction or faulty release.

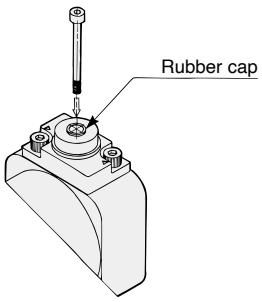

2. Locking type manual release

While pushing the M/O knob, turn it 90° counterclockwise. The lock is released (and remains in a released state) by aligning the ▲mark on the cap with the ▼OFF mark on the M/O knob.
When locking is desired, turn the M/O knob 90° clockwise while pushing completely down, and align the▲ mark on the cap with the ▼ON mark on the M/O knob. The correct position is confirmed by a clicking sound.
Failure to click it into place properly can cause the lock to disengage.

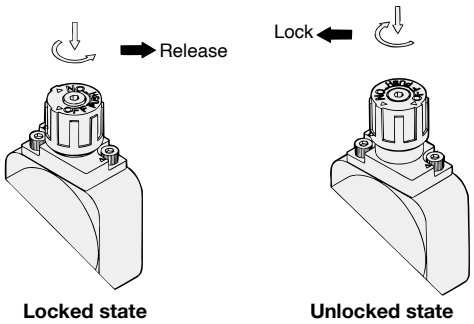

Working Principle

∗ The figures below are the same as those for CBA2 series.

•Head end lock (Rod end lock is the same.)

1. When the piston rod is getting closer to the stroke end, the taper part (∗) of the piston rod edge will push the lock piston up.

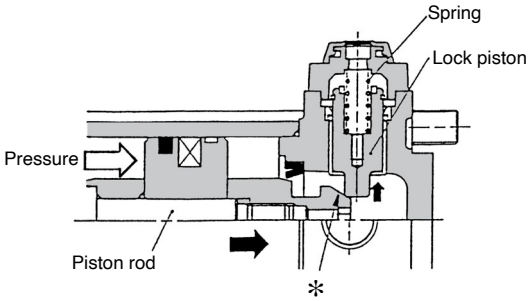

2. The lock piston is pushed up further.

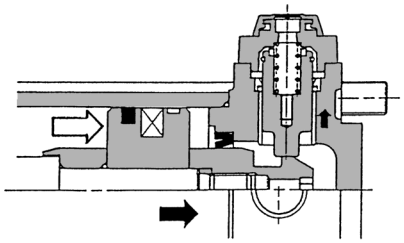

3. The lock piston is pushed up into the groove of the piston rod to lock it. (The lock piston is pushed up by spring force.) At this time, it is exhausted from the port on the head side and introduced into the atmosphere.

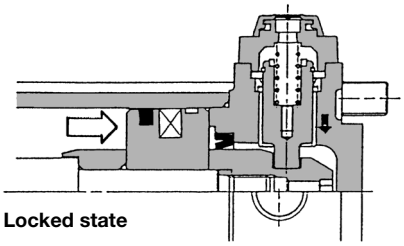

4. When pressure is supplied in the head side, lock piston will be pushed up to release the lock.

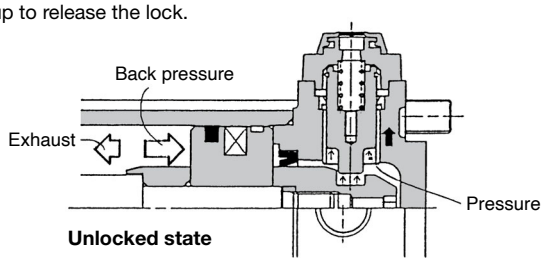

5. When the lock is released, the cylinder will move forward.

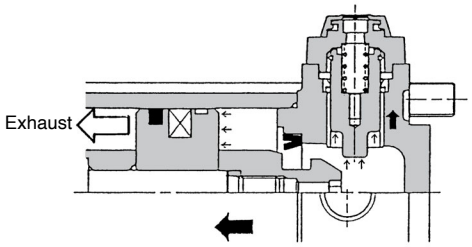

⚠ Safety Instructions

These safety instructions are intended to prevent hazardous situations and/or equipment damage. These instructions indicate the level of potential hazard with the labels of **"Caution," "Warning"** or **"Danger."** They are all important notes for safety and must be followed in addition to International Standards (ISO/IEC) [1], and other safety regulations.

⚠ **Danger:**	**Danger** indicates a hazard with a high level of risk which, if not avoided, will result in death or serious injury.
⚠ **Warning:**	**Warning** indicates a hazard with a medium level of risk which, if not avoided, could result in death or serious injury.
⚠ **Caution:**	**Caution** indicates a hazard with a low level of risk which, if not avoided, could result in minor or moderate injury.

1) ISO 4414: Pneumatic fluid power – General rules and safety requirements for systems and their components.
ISO 4413: Hydraulic fluid power – General rules and safety requirements for systems and their components.
IEC 60204-1: Safety of machinery – Electrical equipment of machines. (Part 1: General requirements)
ISO 10218-1: Robots and robotic devices - Safety requirements for industrial robots - Part 1: Robots.
etc.

⚠ Warning

1. **The compatibility of the product is the responsibility of the person who designs the equipment or decides its specifications.**
   Since the product specified here is used under various operating conditions, its compatibility with specific equipment must be decided by the person who designs the equipment or decides its specifications based on necessary analysis and test results. The expected performance and safety assurance of the equipment will be the responsibility of the person who has determined its compatibility with the product. This person should also continuously review all specifications of the product referring to its latest catalogue information, with a view to giving due consideration to any possibility of equipment failure when configuring the equipment.

2. **Only personnel with appropriate training should operate machinery and equipment.**
   The product specified here may become unsafe if handled incorrectly. The assembly, operation and maintenance of machines or equipment including our products must be performed by an operator who is appropriately trained and experienced.

3. **Do not service or attempt to remove product and machinery/ equipment until safety is confirmed.**
   1. The inspection and maintenance of machinery/equipment should only be performed after measures to prevent falling or runaway of the driven objects have been confirmed.
   2. When the product is to be removed, confirm that the safety measures as mentioned above are implemented and the power from any appropriate source is cut, and read and understand the specific product precautions of all relevant products carefully.
   3. Before machinery/equipment is restarted, take measures to prevent unexpected operation and malfunction.

4. **Our products cannot be used beyond their specifications.**
   Our products are not developed, designed, and manufactured to be used under the following conditions or environments.
   Use under such conditions or environments is not covered.
   1. Conditions and environments outside of the given specifications, or use outdoors or in a place exposed to direct sunlight.
   2. Use for nuclear power, railways, aviation, space equipment, ships, vehicles, military application, equipment affecting human life, body, and property, fuel equipment, entertainment equipment, emergency shut-off circuits, press clutches, brake circuits, safety equipment, etc., and use for applications that do not conform to standard specifications such as catalogues and operation manuals.
   3. Use for interlock circuits, except for use with double interlock such as installing a mechanical protection function in case of failure. Please periodically inspect the product to confirm that the product is operating properly.

⚠ Caution

We develop, design, and manufacture our products to be used for automatic control equipment, and provide them for peaceful use in manufacturing industries.
Use in non-manufacturing industries is not covered.
Products we manufacture and sell cannot be used for the purpose of transactions or certification specified in the Measurement Act.
The new Measurement Act prohibits use of any unit other than SI units in Japan.

Limited warranty and Disclaimer/Compliance Requirements

The product used is subject to the following "Limited warranty and Disclaimer" and "Compliance Requirements".Read and accept them before using the product.

Limited warranty and Disclaimer

1. The warranty period of the product is 1 year in service or 1.5 years after the product is delivered, whichever is first. [2] Also, the product may have specified durability, running distance or replacement parts. Please consult your nearest sales branch.
2. For any failure or damage reported within the warranty period which is clearly our responsibility, a replacement product or necessary parts will be provided. This limited warranty applies only to our product independently, and not to any other damage incurred due to the failure of the product.
3. Prior to using SMC products, please read and understand the warranty terms and disclaimers noted in the specified catalogue for the particular products.

2) Vacuum pads are excluded from this 1 year warranty.
A vacuum pad is a consumable part, so it is warranted for a year after it is delivered. Also, even within the warranty period, the wear of a product due to the use of the vacuum pad or failure due to the deterioration of rubber material are not covered by the limited warranty.

Compliance Requirements

1. The use of SMC products with production equipment for the manufacture of weapons of mass destruction (WMD) or any other weapon is strictly prohibited.
2. The exports of SMC products or technology from one country to another are governed by the relevant security laws and regulations of the countries involved in the transaction. Prior to the shipment of a SMC product to another country, assure that all local rules governing that export are known and followed.

SMC Corporation (Europe)

Austria	+43 (0)2262622800	www.smc.at	office.at@smc.com
Belgium	+32 (0)33551464	www.smc.be	info@smc.be
Bulgaria	+359 (0)2807670	www.smc.bg	sales.bg@smc.com
Croatia	+385 (0)13707288	www.smc.hr	sales.hr@smc.com
Czech Republic	+420 541424611	www.smc.cz	office.at@smc.com
Denmark	+45 70252900	www.smcdk.com	smc.dk@smc.com
Estonia	+372 651 0370	www.smcee.ee	info.ee@smc.com
Finland	+358 207513513	www.smc.fi	smc.fi@smc.com
France	+33 (0)164761000	www.smc-france.fr	supportclient.fr@smc.com
Germany	+49 (0)61034020	www.smc.de	info.de@smc.com
Greece	+30 210 2717265	www.smchellas.gr	sales@smchellas.gr
Hungary	+36 23513000	www.smc.hu	office.hu@smc.com
Ireland	+353 (0)14039000	www.smcautomation.ie	technical.ie@smc.com
Italy	+39 03990691	www.smcitalia.it	mailbox.it@smc.com
Latvia	+371 67817700	www.smc.lv	info.lv@smc.com
Lithuania	+370 5 2308118	www.smclt.lt	info.lt@smc.com
Netherlands	+31 (0)205318888	www.smc.nl	info@smc.nl
Norway	+47 67129020	www.smc-norge.no	post.no@smc.com
Poland	+48 22 344 40 00	www.smc.pl	office.pl@smc.com
Portugal	+351 214724500	www.smc.eu	apoiocliente.pt@smc.com
Romania	+40 213205111	www.smcromania.ro	office.ro@smc.com
Russia	+7 (812)3036600	www.smc.eu	sales@smcru.com
Slovakia	+421 (0)413213212	www.smc.sk	sales.sk@smc.com
Slovenia	+386 (0)73885412	www.smc.si	office.si@smc.com
Spain	+34 945184100	www.smc.eu	post.es@smc.com
Sweden	+46 (0)86031240	www.smc.nu	order.se@smc.com
Switzerland	+41 (0)523963131	www.smc.ch	helpcenter.ch@smc.com
Turkey	+90 212 489 0 440	www.smcturkey.com.tr	satis.tr@smc.com
UK	+44 (0)845 121 5122	www.smc.uk	sales.gb@smc.com
South Africa	+27 10 900 1233	www.smcza.co.za	Sales.za@smc.com

Printing DQ 00 Printed in Spain

Specifications are subject to change without prior notice and any obligation on the part of the manufacturer