Air Cylinder

Ø 20, Ø 25, Ø 32, Ø 40

RoHS

Cylinder with rod end bracket is standardised.

Interchangeable in mounting with the existing model

New

- A double rod type and a single acting type have been added.

- A non-rotating rod type has been added.

- A direct mount type has been added.

- Made-to-order options have been added:
  Special port location (-XC3), Made of stainless steel (-XC6), Dust resistant cylinder (-XC4), Heat-resistant cylinder (-XB6), etc.

CM2 Series

SMC

CAT.EUS20-269B-UK

Various mounting bracket options

· Mounting brackets suitable for various installation
· Improved mounting flexibility

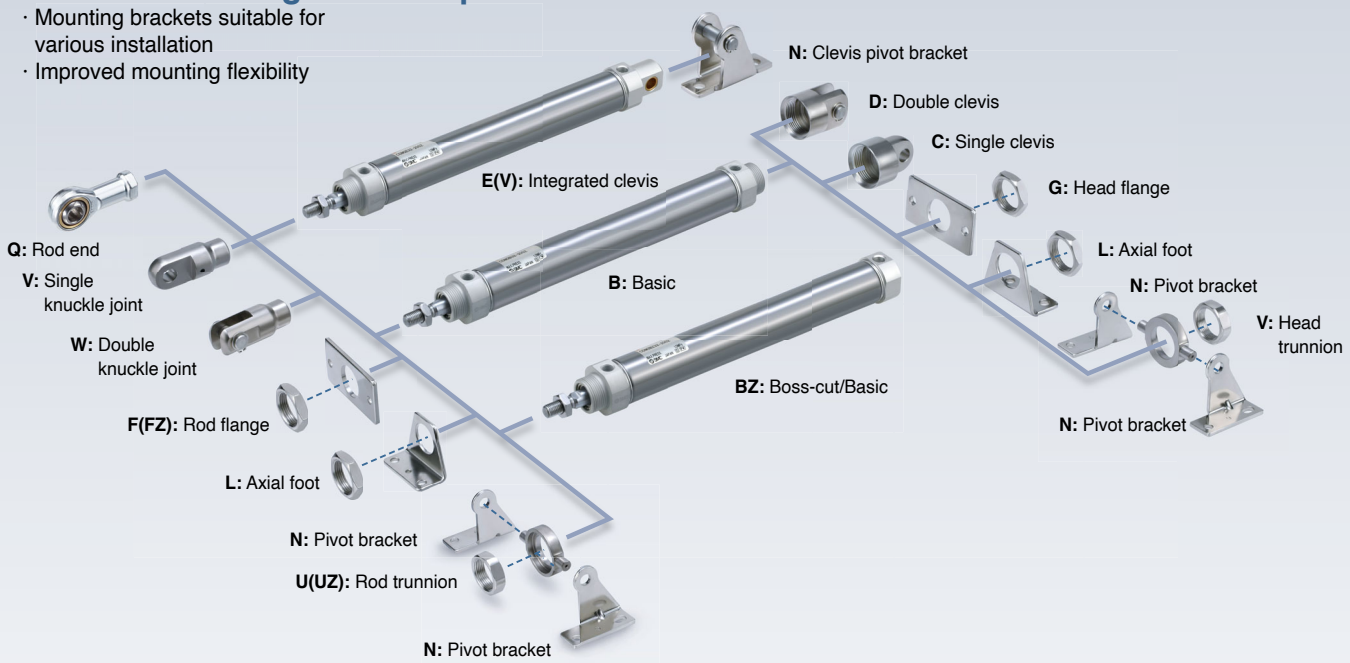

Mounting brackets, accessories, and nut material: Stainless steel

The following accessories are available. (Please order separately.)
Refer to the "Accessories" page of each series for details.

Bore size [mm]	Foot	Flange	Single knuckle joint	Double knuckle joint	Mounting nut	Rod end nut	Accessories page
20, 25, 32, 40	○	○	○	○	○	○	20, 21, 22, 23, 71

Part numbers for products with a rod end bracket and/or a pivot bracket available

It is not necessary to order a bracket for the applicable cylinder separately.

∗ Mounting brackets are shipped together with the product but do not come assembled.

Example) **CDM2E20-50Z1- N W -M9BW**

Pivot bracket	
—	No bracket
H	Pivot bracket

N: Kit of pivot bracket and integrated single clevis

Kit of pivot bracket and trunnion

Rod end bracket	
—	No bracket
V	Single knuckle joint
W	Double knuckle joint
H	Rod end

With rod end bracket

V: Single knuckle joint

W: Double knuckle joint

Q: Rod end

Easy fine adjustment of auto switch position

Fine adjustment of the auto switch set position can be performed by loosening the auto switch attached screw without loosening the auto switch mounting band. Operability improved compared with the existing auto switch set position adjustment, where the complete switch mounting band requires loosening

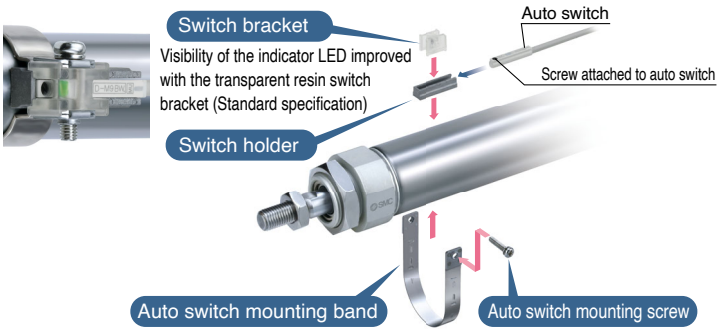

Overall length is shortened with boss-cut type

Boss for the head cover bracket is eliminated and the overall length of cylinder is shortened.

Overall Length Dimension Comparison (compared to the basic type (B)) [mm]

Ø 20	Ø 25	Ø 32	Ø 40
–13	–13	–13	–16

Mounting

- Boss-cut/Basic (BZ)
- Boss-cut/Rod flange (FZ)
- Boss-cut/Rod trunnion (UZ)

Specifications, performance, and mounting method are the same as those of the existing model.

Series Variations

Series	Action	Type	Cushion	Bore size [mm] 20	25	32	40	Variations With rod bot	Page
Standard type	Double acting	Single rod	Rubber	●	●	●	●	●	5
			Air	●	●	●	●	●	
	New Double acting	Double rod	Rubber	●	●	●	●	●	24
			Air	●	●	●	●	●	
	New Single rod (Spring return/ extend)	Single rod	Rubber	●	●	●	●		32
New Non-rotating rod	Double acting	Single rod	Rubber	●	●	●	●		46
			Air	●	●	●	●		
	Double acting	Double rod	Rubber	●	●	●	●		52
			Air	●	●	●	●		
New Direct mount type 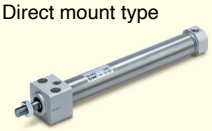	Double acting	Single rod	Rubber	●	●	●	●		56
			Air	●	●	●	●		
Smooth Cylinder	Double acting	Single rod	Rubber	●	●	●	●		Catalogue on https:// www.smc.eu
Low Speed Cylinder	Double acting	Single rod	Rubber	●	●	●	●		
Longer Life Cylinder	Double acting	Single rod	Rubber	●	●	●	●		

∗ For details about the clean series, refer to catalogue on **www.smc.eu**

CONTENTS

Air Cylinder *CM2 Series*

Standard Type: Double Acting, Single Rod CM2 Series
How to Order ..... p. 5
Specifications ..... p. 6
Weight ..... p. 8
Construction ..... p. 9
Dimensions ..... p. 10
Dimensions of Accessories ..... p. 20

Standard Type: Double Acting, Double Rod CM2W Series
How to Order ..... p. 24
Specifications ..... p. 25
Weight ..... p. 26
Construction ..... p. 26
Dimensions ..... p. 27

Standard Type: Single Acting, Spring Return/Extend CM2 Series
How to Order ..... p. 32
Specifications ..... p. 33
Weight ..... p. 35
Construction ..... p. 36
Dimensions ..... p. 37

Non-rotating Rod Type: Double Acting, Single Rod CM2K Series
How to Order ..... p. 46
Specifications ..... p. 47
Weight ..... p. 49
Construction ..... p. 50
Dimensions ..... p. 51

Non-rotating Rod Type: Double Acting, Double Rod CM2KW Series
How to Order ..... p. 52
Specifications ..... p. 53
Weight ..... p. 54
Construction ..... p. 54
Dimensions ..... p. 55

Direct Mount Type: Double Acting, Single Rod CM2R Series
How to Order ..... p. 56
Specifications ..... p. 57
Weight ..... p. 58
Construction ..... p. 58
Dimensions ..... p. 59

Auto Switch Mounting ..... p. 61
Made to Order Common Specifications ..... p. 67
Safety Instructions ..... Back cover

⚠ Specific Product Precautions

Be sure to read this before handling the products. Refer to the back cover for safety instructions. For actuator and auto switch precautions, refer to "Handling Precautions for SMC Products" and the "Operation Manual" on the SMC website: https://www.smc.eu

Combinations of Standard Products and Made to Order Specifications

CM2 Series

●: Standard
◎: Made to order
○: Per request basis
△: Available with a CM2-Z
—: Not available

∗ For details on the △, refer to the **catalogue on www.smc.eu**.
∗ For products that are available per request basis, the base cylinder may be an existing CM2-Z depending on the contents of the product.

Series	CM2 (Standard)				CM2 (Standard)	CM2K				CM2R	
Action/Type	Double acting				Single acting	Double acting				Double acting	
	Single rod		Double rod		Single rod	Single rod		Double rod		Single rod	
Cushion	Rubber	Air	Rubber	Air	Rubber	Rubber	Air	Rubber	Air	Rubber	Air
Page	5		24		32	46		52		56	

Symbol	Specifications	Applicable bore size											
			Ø 20 to Ø 40										
CM2 (Standard)	Standard type	Ø 20 to Ø 40	●	●	●	●	●	●	●	●	●	●	●
CDM2	Built-in magnet		●	●	●	●	●	●	●	●	●	●	●
CM2-J/K	With rod boot (Nylon tarpaulin, Heat-resistant tarpaulin)		●	●	●	●	—	△	△	○	○	○	○
25A-	Series compatible with secondary batteries (Copper (Cu) and zinc (Zn) restrictions∗1)		●	●	○	○	○	○	○	○	○	○	○
XB6	Heat-resistant cylinder (–10 to 150 °C)∗2		◎	◎	◎	◎	—	△	△	△	△	◎	◎
XB7	Cold-resistant cylinder (–40 to 70 °C)∗2		◎	—	◎	—	—	—	—	—	—	◎	—
XB9	Low-speed cylinder (10 to 50 mm/s)		◎	○	—	—	—	—	—	—	—	◎	—
XC3	Special port location		◎	◎	◎	○	△	△	△	△	○	△	○
XC4□	Dust resistant cylinder		◎	◎∗4	○	○	—	—	—	—	—	○	○
XC6□	Made of stainless steel		◎	◎	△∗3	△∗3	△∗3	△∗3	△∗3	○∗3	○∗3	△∗3	△∗3
XC29	Double knuckle joint with spring pin		◎	◎	○	○	◎	◎	◎	○	○	○	○
XC38	Vacuum specification (Rod through-hole)		—	—	◎	○	—	—	—	—	—	—	—
XC52	Mounting nut with set screw		◎	◎	◎	◎	◎	◎	◎	◎	◎	—	—
XC85	Grease for food processing equipment		◎	◎	△	△	△	△	△	△	△	△	△
X446	PTFE grease		◎	◎	○	○	○	○	○	○	○	◎	○

∗1 For details, refer to the **catalogue on www.smc.eu**.
∗2 The products with an auto switch are not compatible.
∗3 -XC6A only
∗4 XC4C only (-XC4A and -XC4B available on a per request basis)

Air Cylinder: Standard Type
Double Acting, Single Rod

CM2 Series

Ø 20, Ø 25, Ø 32, Ø 40

RoHS

How to Order

	CM2	B	40		–	150	A			Z1	–			–						
With auto switch	CDM2	B	40		–	150	A			Z1	–			–	M9BW		–			
		❶	❷	❸		❹	❺	❻	❼			❽	❾		❿	⓫		⓬		

With auto switch (Built-in magnet)

❶ Mounting

B	Basic (Double-side bossed)
L	Axial foot
F	Rod flange
G	Head flange
C	Single clevis
D	Double clevis
U	Rod trunnion

T	Head trunnion
E	Integrated clevis
V	Integrated clevis (90°)
BZ	Boss-cut/Basic
FZ	Boss-cut/Rod flange
UZ	Boss-cut/Rod trunnion

❷ Bore size

20	20 mm
25	25 mm
32	32 mm
40	40 mm

❸ Port thread type

—	Rc
TN	NPT
TF	G

❹ Cylinder stroke [mm]

Refer to page 6 for standard strokes.

❺ Cushion

—	Rubber bumper
A	Air cushion

❻ Rod end thread

—	Male rod end
F	Female rod end

❼ Rod boot

—	None
J	Nylon tarpaulin
K	Heat-resistant tarpaulin

∗ For female rod end, no rod boot is provided.

❽ Pivot bracket

—	No bracket
N	Pivot bracket

∗ **Only for C, T, U, E, V, and UZ mounting types**
∗ The pivot bracket is shipped together with the product but does not come assembled.

❾ Rod end bracket

—	No bracket	W	Double knuckle joint
V	Single knuckle joint	Q	Rod end

∗ No bracket is provided for the female rod end.
∗ A knuckle joint pin is not provided with the single knuckle joint.
∗ The rod end bracket is shipped together with the product but does not come assembled.

❿ Auto switch

—	Without auto switch

∗ For applicable auto switches, refer to the table below.

⓫ Number of auto switches

—	2
S	1
n	n

⓬ Made to order

Refer to page 6 for details.

∗ **Refer to page 6 for the ordering example of cylinder assembly.**

Applicable Auto Switches/Refer to the **catalogue on www.smc.eu** for further information on auto switches.

Type	Special function	Electrical entry	Indicator light	Wiring (Output)	Load voltage DC		Load voltage AC	Auto switch model Perpendicular	Auto switch model In-line	Lead wire length [m] 0.5 (—)	1 (M)	3 (L)	5 (Z)	Pre-wired connector	Applicable load	
Solid state auto switch	———	Grommet	Yes	3-wire (NPN)	24 V	5 V, 12 V	—	M9NV	M9N	●	●	●	○	○	IC circuit	Relay, PLC
				3-wire (PNP)				M9PV	M9P	●	●	●	○	○		
				2-wire		12 V		M9BV	M9B	●	●	●	○	○	—	
	Diagnostic indication (2-colour indicator)	Grommet		3-wire (NPN)		5 V, 12 V		M9NWV	M9NW	●	●	●	○	○	IC circuit	
				3-wire (PNP)				M9PWV	M9PW	●	●	●	○	○		
				2-wire		12 V		M9BWV	M9BW	●	●	●	○	○	—	
	Water resistant (2-colour indicator)			3-wire (NPN)		5 V, 12 V		M9NAV∗1	M9NA∗1	○	○	●	○	○	IC circuit	
				3-wire (PNP)				M9PAV∗1	M9PA∗1	○	○	●	○	○		
				2-wire		12 V		M9BAV∗1	M9BA∗1	○	○	●	○	○	—	
Reed auto switch	———	Grommet	Yes	3-wire (NPN equivalent)	—	5 V	—	A96V	A96	●	●	●	●	○	IC circuit	—
			No	2-wire	24 V	12 V	100 V	A93V	A93	●	●	●	●	○∗2	—	Relay, PLC
							100 V or less	A90V	A90	●	●	●	●	○∗2	IC circuit	

∗1 Water-resistant type auto switches can be mounted on the above models, but SMC cannot guarantee water resistance.
A water-resistant type cylinder is recommended for use in an environment which requires water resistance.
∗2 The load voltage used is 24 VDC.

∗ Lead wire length symbols: 0.5 m ····· — (Example) M9NW
1 m ····· M (Example) M9NWM
3 m ····· L (Example) M9NWL
5 m ····· Z (Example) M9NWZ

∗ Auto switches marked with a "○" are produced upon receipt of order.

∗ Since there are applicable auto switches other than those listed above, refer to page 64 for details.
∗ For details on auto switches with pre-wired connectors, refer to the **catalogue on www.smc.eu**.
∗ The D-A9□□/M9□□□ auto switches are shipped together with the product but do not come assembled. (Only the auto switch mounting brackets are assembled before shipment.)

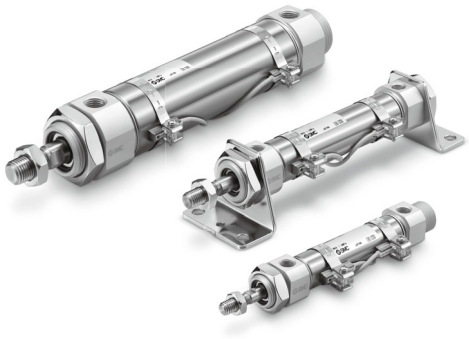

Symbol

Double acting, Single rod

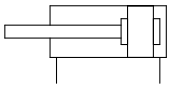

Air cushion

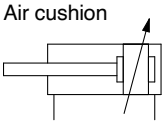

Refer to pages 61 to 66 for cylinders with auto switches.

- Auto Switch Proper Mounting Position (Detection at stroke end) and Mounting Height
- Minimum Stroke for Auto Switch Mounting
- Operating Range
- Auto Switch Mounting Brackets/Part Nos.

Made to Order Common Specifications
(For details, refer to pages 67 to 74.)

Symbol	Specifications
-XB6	Heat-resistant cylinder (–10 to 150 °C)
-XB7	Cold-resistant cylinder (–40 to 70 °C)∗1
-XB9	Low-speed cylinder (10 to 50 mm/s)∗1
-XC3	Special port location
-XC4□	Dust resistant cylinder∗1
-XC6□	Made of stainless steel
-XC29	Double knuckle joint with spring pin
-XC52	Mounting nut with set screw
-XC85	Grease for food processing equipment
-X446	PTFE grease

∗1 Rubber bumper only

Rod Boot Material

Symbol	Rod boot material	Max. ambient temp.
J	Nylon tarpaulin	70 °C
K	Heat-resistant tarpaulin	110 °C∗1

∗1 Max. ambient temperature for rod boot itself

Specifications

Bore size [mm]			20	25	32	40
Type			Pneumatic			
Action			Double acting, Single rod			
Fluid			Air			
Proof pressure			1.5 MPa			
Max. operating pressure			1.0 MPa			
Min. operating pressure			0.05 MPa			
Ambient and fluid temperatures			Without auto switch: –10 °C to 70 °C With auto switch: –10 °C to 60 °C (No freezing)			
Lubrication			Not required (Non-lube)			
Stroke length tolerance∗1			$^{+1.4}_{0}$ mm			
Piston speed			Rubber bumper: 50 to 750 mm/s, Air cushion: 50 to 1000 mm/s			
Cushion			Rubber bumper, Air cushion			
Allowable kinetic energy	**Rubber bumper**	**Male thread**	0.27 J	0.4 J	0.65 J	1.2 J
		Female thread	0.11 J	0.18 J	0.29 J	0.52 J
	Air cushion (Effective cushion length [mm])	**Male thread**	0.54 J (11.0)	0.78 J (11.0)	1.27 J (11.0)	2.35 J (11.8)
		Female thread	0.11 J	0.18 J	0.29 J	0.52 J

∗1 Does not include the amount of bumper change
∗ Operate the cylinder within the allowable kinetic energy.
∗ For the allowable rod end lateral load, refer to the “Air Cylinders Model Selection” in the **catalogue on www.smc.eu**.

Standard Strokes

Bore size [mm]	Standard stroke [mm]∗1	Manufacturable∗2 stroke [mm]
20	25, 50, 75, 100, 125, 150, 200, 250, 300	5 to 1000 (1000∗3)
25		5 to 1500 (1000∗3)
32		5 to 2000 (1000∗3)
40		

∗1 Intermediate strokes not listed above are produced upon receipt of order. The manufacturing of intermediate strokes in 1 mm increments is possible. (Spacers are not used.)
∗2 Using a stroke of a length which is smaller than the effective cushion length may result in reduced air cushion performance. Refer to “Technical Data 1” in the **catalogue on www.smc.eu** for details on the effective cushion length.
∗3 The value in brackets indicates the max. stroke of the cylinder with a rod boot.
∗ Applicable strokes should be confirmed according to the usage. For details, refer to the “Air Cylinders Model Selection” in the **catalogue on www.smc.eu**. In addition, the products that exceed the standard stroke might not be able to fulfill the specifications due to deflection, etc.
∗ The min. stroke of the type with a magnet varies depending on the switch. For details, refer to pages 62 and 66.

Option: Ordering Example of Cylinder Assembly

Cylinder model: CDM2C20-50Z1-NV-M9BW

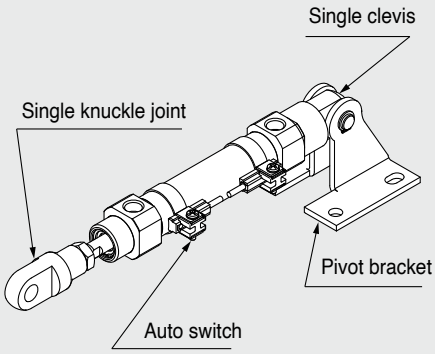

Mounting C: Single clevis
Pivot bracket N: Yes
Rod end bracket V: Single knuckle joint
Auto switch D-M9BW: 2 pcs.

∗ Pivot bracket, single knuckle joint and auto switch are shipped together with the product but do not come assembled.

∗ Pivot bracket is only available for C, T, U, E, V, and UZ mounting types.
∗ No bracket is provided for the female rod end.

Mounting and Accessories

Mounting \ Accessories		Body	Standard (mounted to the body)					Standard (packaged together but does not come assembled)										Option		
			Mounting nut	*1 Rod end nut (Male thread)	Single clevis	Double clevis	*7 Liner	Mounting nut	Foot	Flange	Pivot bracket	*5 Pivot bracket pin	*5 Double clevis pin	Trunnion	Mounting nut (For trunnion)	Clevis pivot bracket (CM2E/CM2V)	*5 Clevis pivot bracket pin (CM2E/CM2V)	Single knuckle joint	*6 Double knuckle joint	Rod end
B	Basic (Double-side bossed)	●(1 pc.)	●(1 pc.)	●(1 pc.)	—	—	—	—	—	—	—	—	—	—	—	—	—	●	●	●
L	Axial foot	●(1 pc.)	●(1 pc.)*2	●(1 pc.)	—	—	—	●(1 pc.)*2	●(2 pcs.)	—	—	—	—	—	—	—	—	●	●	●
F	Rod flange	●(1 pc.)	●(1 pc.)	●(1 pc.)	—	—	—	—	—	●(1 pc.)	—	—	—	—	—	—	—	●	●	●
G	Head flange	●(1 pc.)	●(1 pc.)	●(1 pc.)	—	—	—	—	—	●(1 pc.)	—	—	—	—	—	—	—	●	●	●
C	Single clevis	●(1 pc.)	—*3	●(1 pc.)	●(1 pc.)	—	●(Max. 3 pcs.)	—*3	—	—	—	—	—	—	—	—	—	●	●	●
D	Double clevis	●(1 pc.)	—*3	●(1 pc.)	—	●(1 pc.)	●(Max. 3 pcs.)	—*3	—	—	—	—	●(1 pc.)	—	—	—	—	●	●	●
U	Rod trunnion	●(1 pc.)	—*4	●(1 pc.)	—	—	—	—	—	—	—	—	—	●(1 pc.)	●(1 pc.)	—	—	●	●	●
T	Head trunnion	●(1 pc.)	—*4	●(1 pc.)	—	—	—	—	—	—	—	—	—	●(1 pc.)	●(1 pc.)	—	—	●	●	●
E	Integrated clevis	●(1 pc.)	—*3	●(1 pc.)	—	—	—	—*3	—	—	—	—	—	—	—	—	—	●	●	●
V	Integrated clevis (90°)	●(1 pc.)	—*3	●(1 pc.)	—	—	—	—*3	—	—	—	—	—	—	—	—	—	●	●	●
BZ	Boss-cut/Basic	●(1 pc.)	●(1 pc.)	●(1 pc.)	—	—	—	—	—	—	—	—	—	—	—	—	—	●	●	●
FZ	Boss-cut/ Rod flange	●(1 pc.)	●(1 pc.)	●(1 pc.)	—	—	—	—	—	●(1 pc.)	—	—	—	—	—	—	—	●	●	●
UZ	Boss-cut/ Rod trunnion	●(1 pc.)	—*4	●(1 pc.)	—	—	—	—	—	—	—	—	—	●(1 pc.)	●(1 pc.)	—	—	●	●	●

		Standard (mounted to the body)					Option												
Mounting: **C** Pivot bracket symbol: **N** Single clevis + Pivot bracket + Pin	●(1 pc.)	—*3	●(1 pc.)	●(1 pc.)	—	● (Max. 3 pcs.)	—*3	—	—	●(2 pcs.)	●(1 pc.)	—	—	—	—	—	●	●	●
Mounting: **T, U, UZ** Pivot bracket symbol: **N** Trunnion + Pivot bracket	●(1 pc.)	—*4	●(1 pc.)	—	—	—	—*3	—	—	●(2 pcs.)	—	—	●(1 pc.)	●(1 pc.)	—	—	●	●	●
Mounting: **E** Pivot bracket symbol: **N** Integrated clevis + Pivot bracket + Pin	●(1 pc.)	—*3	●(1 pc.)	—	—	—	—*3	—	—	—	—	—	—	—	●(1 pc.)	●(1 pc.)	●	●	●
Mounting: **V** Pivot bracket symbol: **N** Integrated clevis (90°) + Pivot bracket + Pin	●(1 pc.)	—*3	●(1 pc.)	—	—	—	—*3	—	—	—	—	—	—	—	●(1 pc.)	●(1 pc.)	●	●	●

*1 Rod end nut is not provided for the female rod end.
*2 Two mounting nuts are packaged together.
*3 Mounting nut is not packaged for the clevis.
*4 Trunnion nut is packaged for U, T, and UZ.
*5 Retaining rings are included.
*6 A pin and retaining rings (split pins for Ø 40) are included.
*7 This is the part(s) used to adjust the clevis angle. Mounting quantity can vary.
* Stainless steel mounting brackets and accessories are also available.
Refer to page 71 for details.

Mounting Brackets/Part Nos.

Mounting bracket	Min. order quantity	Bore size [mm] 20	25	32	40	Contents (for min. order quantity)
Foot*1	2	CM-L020B	CM-L032B		CM-L040B	2 foot brackets, 1 mounting nut
Foot*2	1	CMZ1-L020B	CMZ1-L032B		CMZ1-L040B	1 foot bracket
Flange	1	CM-F020B	CM-F032B		CM-F040B	1 flange
Single clevis*3	1	CM-C020B	CM-C032B		CM-C040B	1 single clevis, 3 liners
Double clevis (with pin)*3, *4	1	CM-D020B	CM-D032B		CM-D040B	1 double clevis, 3 liners, 1 clevis pin, 2 retaining rings
Double clevis pin	1	CDP-1			CDP-2	1 clevis pin, 2 retaining rings (split pins)
Trunnion (with nut)	1	CM-T020B	CM-T032B		CM-T040B	1 trunnion, 1 trunnion nut
Rod end nut	1	NT-02	NT-03		NT-04	1 rod end nut
Mounting nut	1	SN-020B	SN-032B		SN-040B	1 mounting nut
Trunnion nut	1	TN-020B	TN-032B		TN-040B	1 trunnion nut
Single knuckle joint	1	I-020B	I-032B		I-040B	1 single knuckle joint
Double knuckle joint	1	Y-020B	Y-032B		Y-040B	1 double knuckle joint, 1 knuckle pin, 2 retaining rings
Rod end	1	KJ8D	KJ10D		KJ14D	1 rod end
Double knuckle joint pin	1	CDP-1			CDP-3	1 knuckle pin, 2 retaining rings (split pins)
Clevis pivot bracket pin (For CM2E/CM2V)	1	CD-S02		CD-S03		1 clevis pin, 2 retaining rings
Clevis pivot bracket (For CM2E/CM2V)	1	CM-E020B		CM-E032B		1 clevis pivot bracket, 1 clevis pin, 2 retaining rings
Pivot bracket (For CM2C)	1	CM-B032			CM-B040	2 pivot brackets (1 of each type)
Pivot bracket pin (For CM2C)	1	CDP-1			CD-S03	1 pin, 2 retaining rings
Pivot bracket (For CM2T/CM2U)	1	CM-B020	CM-B032		CM-B040	2 pivot brackets (1 of each type)

*1 Order two foot brackets per cylinder.
*2 A single foot is available.
*3 3 liners are included with a clevis bracket for adjusting the mounting angle.
*4 A clevis pin and retaining rings (split pins for Ø 40) are included.

For dimensions of accessories (options), refer to pages 20 to 23.

Mounting Brackets, Accessories/Material, Surface Treatment

Segment	Description	Material	Surface treatment
Mounting brackets	Foot	Carbon steel	Nickel plating
	Flange	Carbon steel	Nickel plating
	Single clevis	Carbon steel	Electroless nickel plating
	Double clevis	Carbon steel	Electroless nickel plating
	Trunnion	Cast iron	Electroless nickel plating
Accessories	Rod end nut	Carbon steel	Zinc chromating
	Mounting nut	Carbon steel	Nickel plating
	Trunnion nut	Carbon steel	Nickel plating
	Clevis pivot bracket	Carbon steel	Nickel plating
	Clevis pivot bracket pin	Carbon steel	(None)
	Single knuckle joint	Carbon steel Ø 40: Free-cutting steel	Electroless nickel plating
	Double knuckle joint	Carbon steel Ø 40: Cast iron	Electroless nickel plating Metallic silver colour painting for Ø 40
	Rod end	Carbon steel	Zinc plating
	Double clevis pin	Carbon steel	(None)
	Double knuckle joint pin	Carbon steel	(None)
	Pivot bracket	Carbon steel	Nickel plating
	Pivot bracket pin	Carbon steel	(None)

Weight

[kg]

Bore size [mm]		20	25	32	40
Basic weight	Basic (Double-side bossed)	0.14	0.21	0.28	0.56
	Axial foot	0.29	0.37	0.44	0.83
	Flange	0.20	0.30	0.37	0.68
	Integrated clevis	0.12	0.19	0.27	0.52
	Single clevis	0.18	0.25	0.32	0.65
	Double clevis	0.19	0.27	0.33	0.69
	Trunnion	0.18	0.28	0.34	0.66
	Boss-cut/Basic	0.13	0.19	0.26	0.53
	Boss-cut/Flange	0.19	0.28	0.35	0.65
	Boss-cut/Trunnion	0.17	0.26	0.32	0.63
Additional weight per 50 mm of stroke		0.04	0.06	0.08	0.13
Weight reduction for female rod end		–0.01	–0.02	–0.02	–0.04
Option bracket	Clevis pivot bracket (with pin)	0.07	0.07	0.14	0.14
	Single knuckle joint	0.06	0.06	0.06	0.23
	Double knuckle joint (with pin)	0.07	0.07	0.07	0.20
	Rod end	0.05	0.07	0.07	0.16
	Pivot bracket	0.06	0.06	0.06	0.06
	Pivot bracket pin	0.02	0.02	0.02	0.03

Calculation: (Example) **CM2L32-100Z1**

- Basic weight·····0.44 (Foot, Ø 32)
- Additional weight·····0.08/50 mm stroke
- Cylinder stroke·····100 mm stroke

0.44 + 0.08 x 100/50 = **0.60 kg**

Construction

Rubber bumper

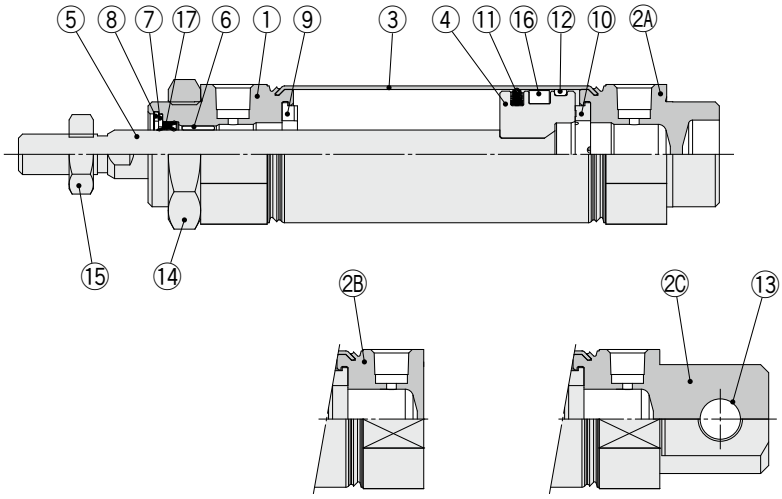

Boss-cut

Integrated clevis

With air cushion

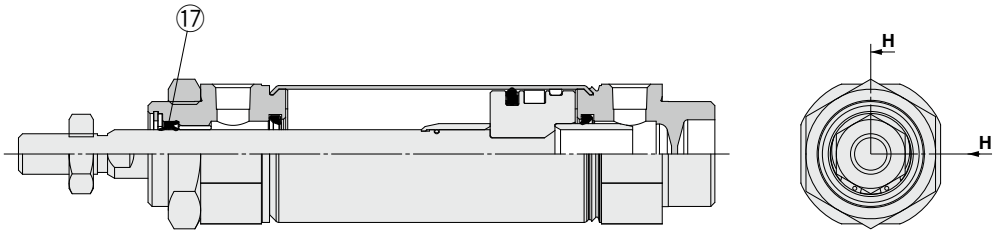

Component Parts

No.	Description	Material	Note
1	**Rod cover**	Aluminium alloy	Anodised
2A	**Head cover A**	Aluminium alloy	Anodised
2B	**Head cover B**	Aluminium alloy	Anodised
2C	**Head cover C**	Aluminium alloy	Anodised
3	**Cylinder tube**	Stainless steel	
4	**Piston**	Aluminium alloy	
5	**Piston rod**	Carbon steel	Hard chrome plating
6	**Bushing**	Bearing alloy	
7	**Seal retainer**	Stainless steel	
8	**Retaining ring**	Carbon steel	Phosphate coating
9	**Bumper**	Resin	
10	**Bumper**	Resin	
11	**Piston seal**	NBR	
12	**Wear ring**	Resin	
13	**Clevis bushing**	Bearing alloy	
14	**Mounting nut**	Carbon steel	Nickel plating
15	**Rod end nut**	Carbon steel	Zinc chromating
16	**Magnet**	—	CDM2□20 to 40-□Z1
17	**Rod seal**	NBR	

Replacement Parts: Seal

●With Rubber Bumper/With Air Cushion

No.	Description	Material	Part no.			
			20	25	32	40
7	**Seal retainer**	Stainless steel	CM-SR20Z	CM-SR25Z	CM-SR32Z	CM-SR40Z
8	**Retaining ring**	Carbon steel	CM-R20	CM-R25	CM-R32	CM-R40
		Stainless steel	CM-R20SUS	CM-R25SUS	CM-R32SUS	CM-R40SUS
17	**Rod seal**	NBR	CM20Z-PS	CM25Z-PS	CM32Z-PS	CM40Z-PS

∗ Since the seal does not include a grease pack, order it separately.
Grease pack part number: GR-S-010 (10 g)

Basic (Double-side Bossed) (B)

CM2B [Bore size] — [Stroke] [ ] **Z1**

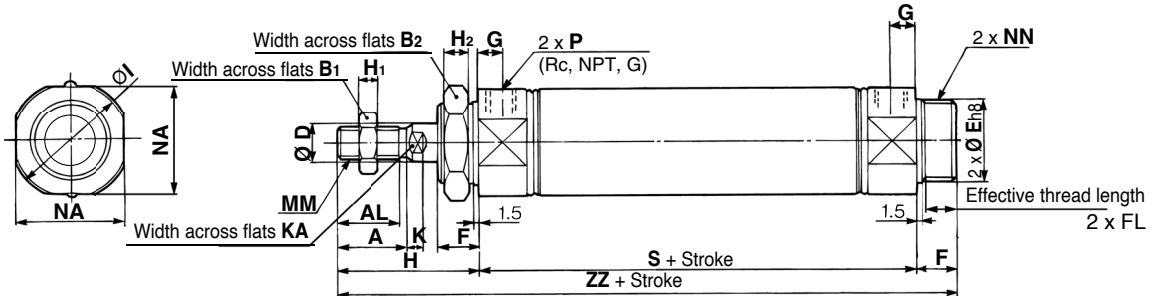

With rod boot

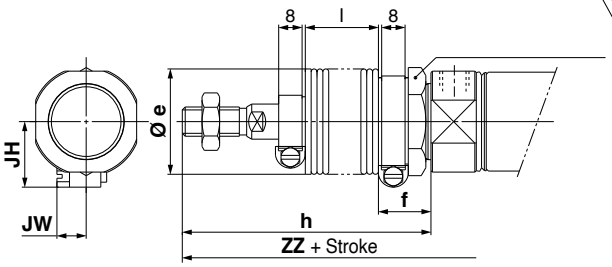

With air cushion

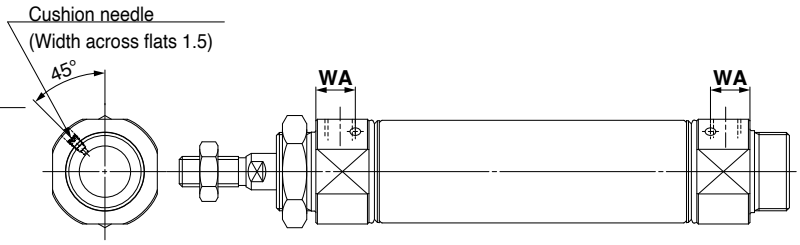

Boss-cut

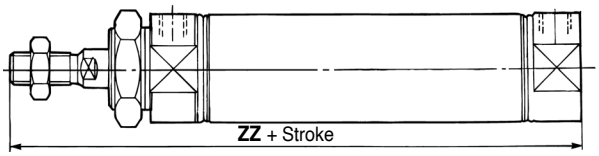

Female rod end

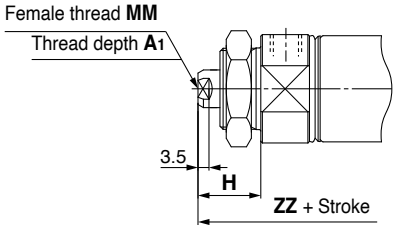

The max. stroke of the cylinder with a rod boot is 1000 mm.
Refer to page 19 for rod boot mounting dimensions.

[mm]

Bore size	A	AL	B_1	B_2	D	E	F	FL	G	H	H_1	H_2	I	K	KA	MM	NA	NN	P	S	ZZ
20	18	15.5	13	26	8	$20^{0}_{-0.033}$	13	10.5	8	41	5	8	28	5	6	M8 x 1.25	24	M20 x 1.5	1/8	62	116
25	22	19.5	17	32	10	$26^{0}_{-0.033}$	13	10.5	8	45	6	8	33.5	5.5	8	M10 x 1.25	30	M26 x 1.5	1/8	62	120
32	22	19.5	17	32	12	$26^{0}_{-0.033}$	13	10.5	8	45	6	8	37.5	5.5	10	M10 x 1.25	34.5	M26 x 1.5	1/8	64	122
40	24	21	22	41	14	$32^{0}_{-0.039}$	16	13.5	11	50	8	10	46.5	7	12	M14 x 1.5	42.5	M32 x 2	1/4	88	154

With Air Cushion [mm]

Bore size	WA
20	12
25	12
32	11
40	16

Boss-cut [mm]

Bore size	ZZ
20	103
25	107
32	109
40	138

Female Rod End [mm]

Bore size	A_1	H	MM	ZZ
20	8	20	M4 x 0.7	95
25	8	20	M5 x 0.8	95
32	12	20	M6 x 1	97
40	13	21	M8 x 1.25	125

* When a female thread is used, use a thin wrench when tightening the piston rod.
* When a female thread is used, depending on the material of the workpiece, use a washer etc., to prevent the contact part at the rod end from being deformed.

Axial Foot (L)

CM2L [Bore size] — [Stroke] [ ] **Z1**

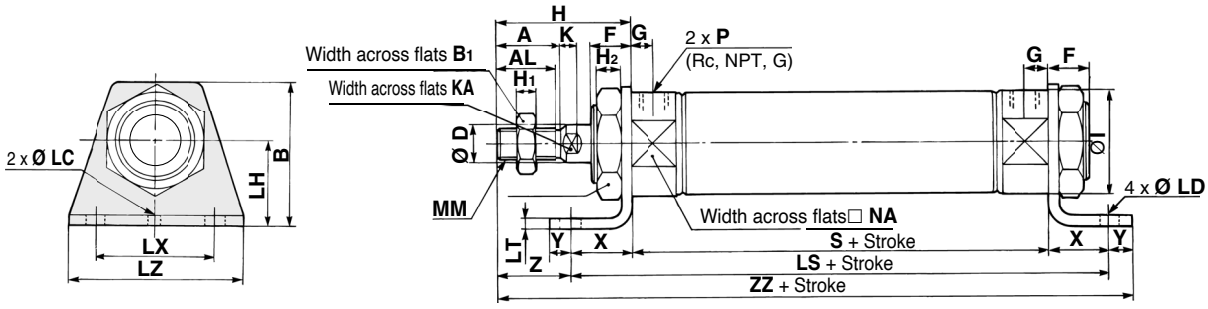

With air cushi

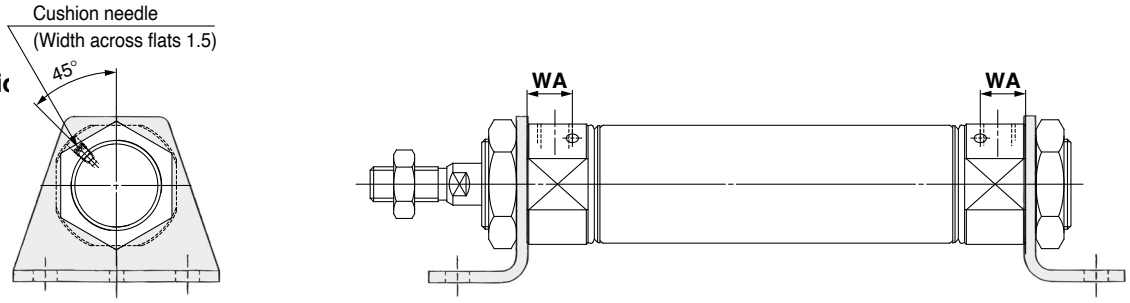

Female rod end

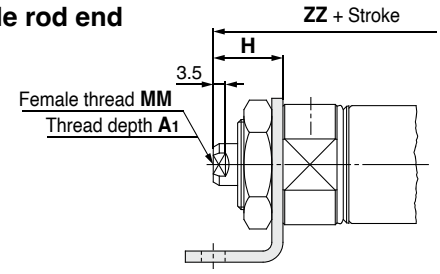

The max. stroke of the cylinder with a rod boot is 1000 mm.
Refer to page 19 for rod boot mounting dimensions.

[mm]

Bore size	A	AL	B	B_1	B_2	D	F	G	H	H_1	H_2	I	K	KA	LC	LD	LH	LS	LT	LX	LZ	MM	NA	P	S	X	Y	Z	ZZ
20	18	15.5	40	13	26	8	13	8	41	5	8	28	5	6	4	6.8	25	102	3.2	40	55	M8 x 1.25	24	1/8	62	20	8	21	131
25	22	19.5	47	17	32	10	13	8	45	6	8	33.5	5.5	8	4	6.8	28	102	3.2	40	55	M10 x 1.25	30	1/8	62	20	8	25	135
32	22	19.5	47	17	32	12	13	8	45	6	8	37.5	5.5	10	4	6.8	28	104	3.2	40	55	M10 x 1.25	34.5	1/8	64	20	8	25	137
40	24	21	54	22	41	14	16	11	50	8	10	46.5	7	12	4	7	30	134	3.2	55	75	M14 x 1.5	42.5	1/4	88	23	10	27	171

With Air Cushion [mm]

Bore size	WA
20	12
25	12
32	11
40	16

Female Rod End [mm]

Bore size	A_1	H	MM	ZZ
20	8	20	M4 x 0.7	110
25	8	20	M5 x 0.8	110
32	12	20	M6 x 1	112
40	13	21	M8 x 1.25	142

∗ When a female thread is used, use a thin wrench when tightening the piston rod.
∗ When a female thread is used, depending on the material of the workpiece, use a washer etc., to prevent the contact part at the rod end from being deformed.

∗ The bracket is shipped together with the product.

Rod Flange (F)

CM2F [Bore size] — [Stroke] [ ] **Z1**

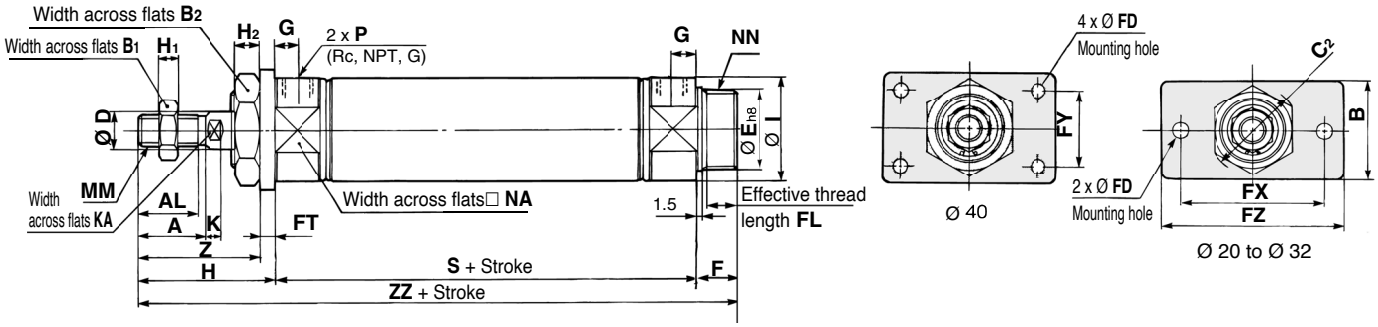

Boss-cut

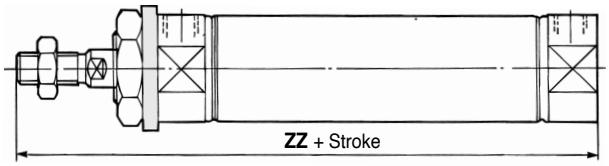

With air cushion

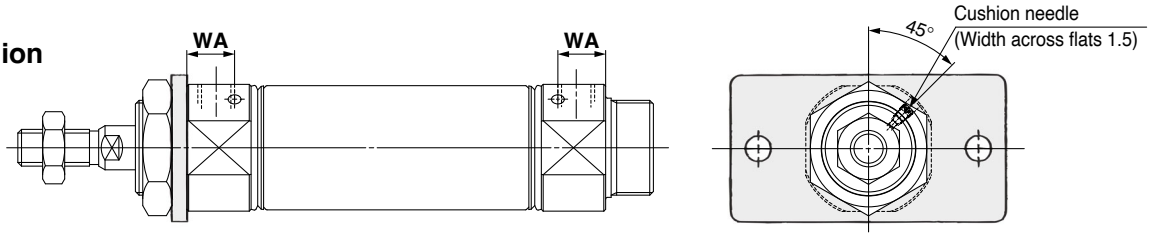

Female rod end

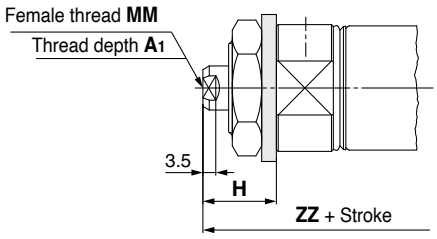

The max. stroke of the cylinder with a rod boot is 1000 mm.
Refer to page 19 for rod boot mounting dimensions.

[mm]

Bore size	A	AL	B	B_1	B_2	C_2	D	E	F	FL	FD	FT	FX	FY	FZ	G	H	H_1	H_2	I	K	KA	MM	NA	NN	P	S	Z	ZZ
20	18	15.5	34	13	26	30	8	$20^{0}_{-0.033}$	13	10.5	7	4	60	–	75	8	41	5	8	28	5	6	M8 x 1.25	24	M20 x 1.5	1/8	62	37	116
25	22	19.5	40	17	32	37	10	$26^{0}_{-0.033}$	13	10.5	7	4	60	–	75	8	45	6	8	33.5	5.5	8	M10 x 1.25	30	M26 x 1.5	1/8	62	41	120
32	22	19.5	40	17	32	37	12	$26^{0}_{-0.033}$	13	10.5	7	4	60	–	75	8	45	6	8	37.5	5.5	10	M10 x 1.25	34.5	M26 x 1.5	1/8	64	41	122
40	24	21	52	22	41	47.3	14	$32^{0}_{-0.039}$	16	13.5	7	5	66	36	82	11	50	8	10	46.5	7	12	M14 x 1.5	42.5	M32 x 2	1/4	88	45	154

Boss-cut [mm]

Bore size	ZZ
20	103
25	107
32	109
40	138

With Air Cushion [mm]

Bore size	WA
20	12
25	12
32	11
40	16

Female Rod End [mm]

Bore size	A_1	H	MM	ZZ
20	8	20	M4 x 0.7	95
25	8	20	M5 x 0.8	95
32	12	20	M6 x 1	97
40	13	21	M8 x 1.25	125

∗ When a female thread is used, use a thin wrench when tightening the piston rod.
∗ When a female thread is used, depending on the material of the workpiece, use a washer etc., to prevent the contact part at the rod end from being deformed.

∗ The bracket is shipped together with the product.

Head Flange (G)

CM2G [Bore size] — [Stroke] [ ] **Z1**

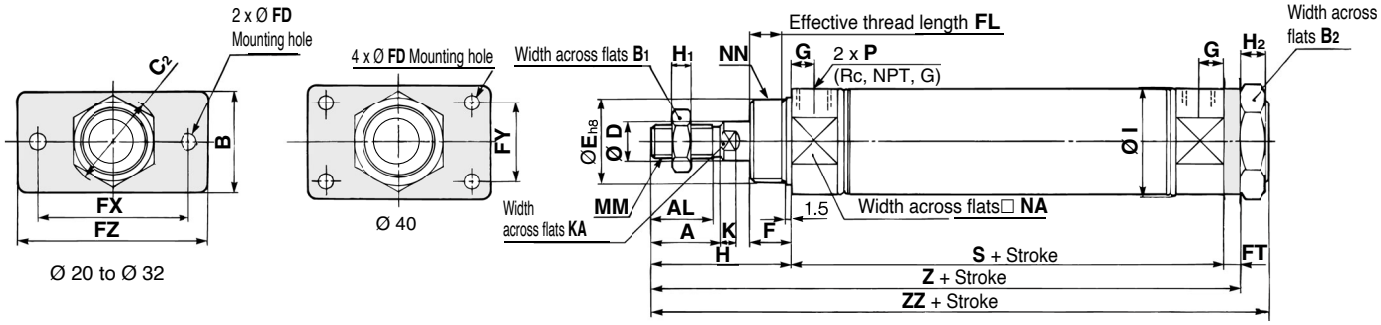

With air cushion

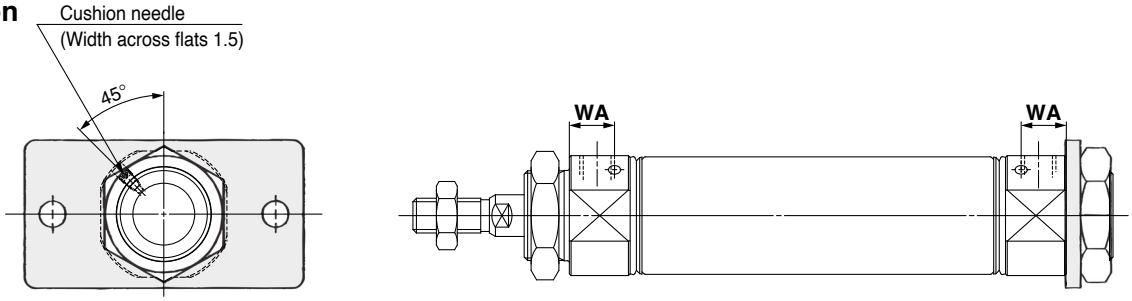

Female rod end

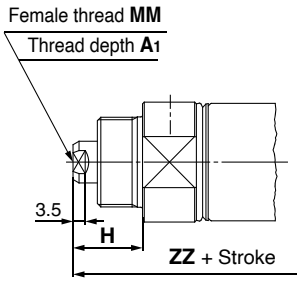

The max. stroke of the cylinder with a rod boot is 1000 mm.
Refer to page 19 for rod boot mounting dimensions.

[mm]

Bore size	A	AL	B	B_1	B_2	C_2	D	E	F	FL	FD	FT	FX	FY	FZ	G	H	H_1	H_2	I
20	18	15.5	34	13	26	30	8	$20^{0}_{-0.033}$	13	10.5	7	4	60	–	75	8	41	5	8	28
25	22	19.5	40	17	32	37	10	$26^{0}_{-0.033}$	13	10.5	7	4	60	–	75	8	45	6	8	33.5
32	22	19.5	40	17	32	37	12	$26^{0}_{-0.033}$	13	10.5	7	4	60	–	75	8	45	6	8	37.5
40	24	21	52	22	41	47.3	14	$32^{0}_{-0.039}$	16	13.5	7	5	66	36	82	11	50	8	10	46.5

[mm]

Bore size	K	KA	MM	NA	NN	P	S	Z	ZZ
20	5	6	M8 x 1.25	24	M20 x 1.5	1/8	62	107	116
25	5.5	8	M10 x 1.25	30	M26 x 1.5	1/8	62	111	120
32	5.5	10	M10 x 1.25	34.5	M26 x 1.5	1/8	64	113	122
40	7	12	M14 x 1.5	42.5	M32 x 2	1/4	88	143	154

With Air Cushion [mm]

Bore size	WA
20	12
25	12
32	11
40	16

Female Rod End [mm]

Bore size	A_1	H	MM	ZZ
20	8	20	M4 x 0.7	95
25	8	20	M5 x 0.8	95
32	12	20	M6 x 1	97
40	13	21	M8 x 1.25	125

∗ When a female thread is used, use a thin wrench when tightening the piston rod.
∗ When a female thread is used, depending on the material of the workpiece, use a washer etc., to prevent the contact part at the rod end from being deformed.

∗ The bracket is shipped together with the product.

Single Clevis (C)

CM2C [Bore size] — [Stroke] [ ] **Z1**

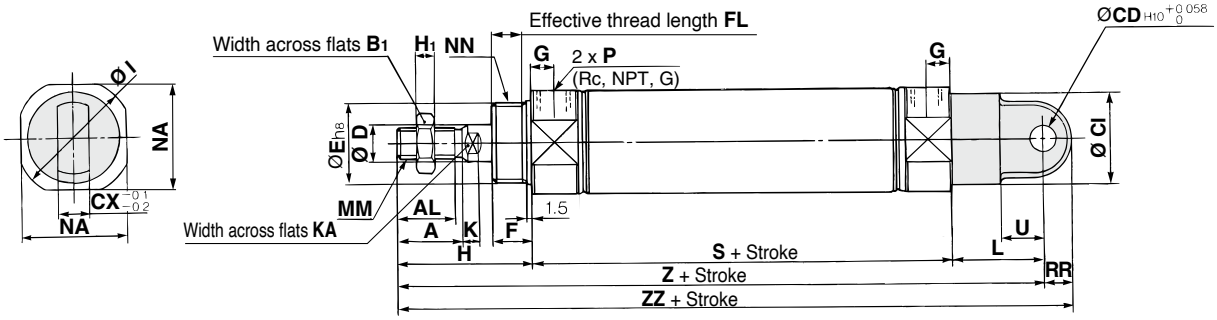

With air cushion

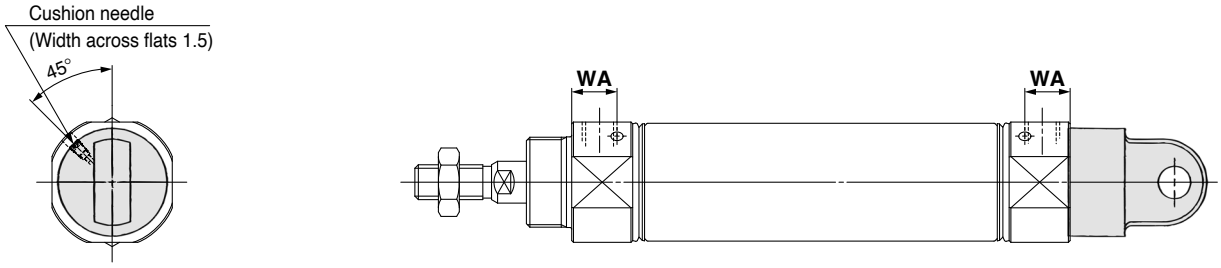

Female rod end

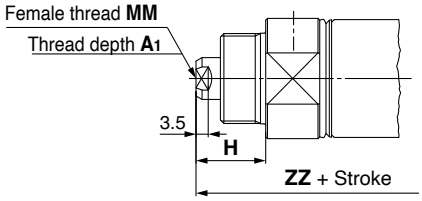

The max. stroke of the cylinder with a rod boot is 1000 mm.
Refer to page 19 for rod boot mounting dimensions.

[mm]

Bore size	A	AL	B1	CI	CD	CX	D	E	F	FL	G	H	H1	I	K	KA	L	MM	NA	NN	P	RR	S	U	Z	ZZ
20	18	15.5	13	24	9	10	8	$20^{0}_{-0.033}$	13	10.5	8	41	5	28	5	6	30	M8 x 1.25	24	M20 x 1.5	1/8	9	62	14	133	142
25	22	19.5	17	30	9	10	10	$26^{0}_{-0.033}$	13	10.5	8	45	6	33.5	5.5	8	30	M10 x 1.25	30	M26 x 1.5	1/8	9	62	14	137	146
32	22	19.5	17	30	9	10	12	$26^{0}_{-0.033}$	13	10.5	8	45	6	37.5	5.5	10	30	M10 x 1.25	34.5	M26 x 1.5	1/8	9	64	14	139	148
40	24	21	22	38	10	15	14	$32^{0}_{-0.039}$	16	13.5	11	50	8	46.5	7	12	39	M14 x 1.5	42.5	M32 x 2	1/4	11	88	18	177	188

With Air Cushion [mm]

Bore size	WA
20	12
25	12
32	11
40	16

Female Rod End [mm]

Bore size	A1	H	MM	ZZ
20	8	20	M4 x 0.7	121
25	8	20	M5 x 0.8	121
32	12	20	M6 x 1	123
40	13	21	M8 x 1.25	159

* When a female thread is used, use a thin wrench when tightening the piston rod.
* When a female thread is used, depending on the material of the workpiece, use a washer etc., to prevent the contact part at the rod end from being deformed.

Double Clevis (D)

CM2D [Bore size] — [Stroke] [ ] **Z1**

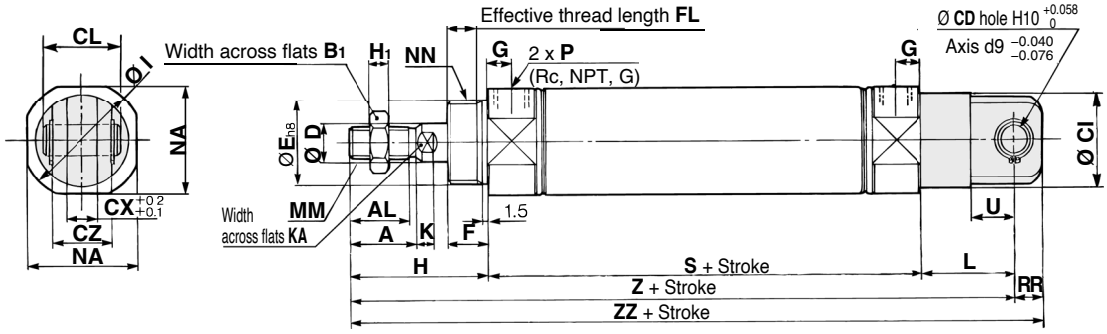

With air cushion

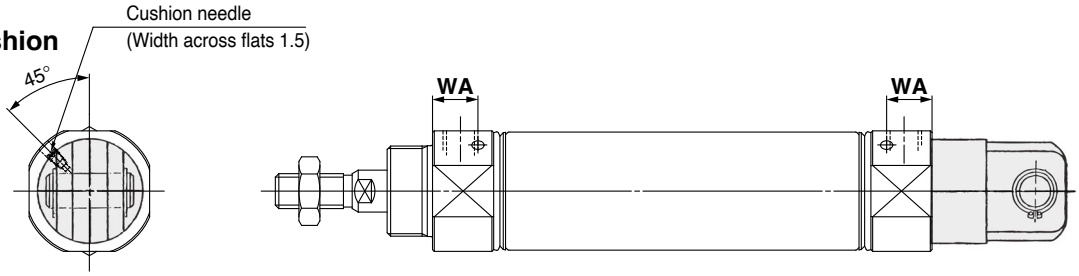

Female rod end

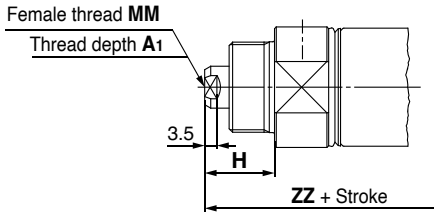

The max. stroke of the cylinder with a rod boot is 1000 mm.
Refer to page 19 for rod boot mounting dimensions.

[mm]

Bore size	A	AL	B1	CD	CI	CL	CX	CZ	D	E	F	FL	G	H	H1	I	K	KA	L	MM	NA	NN	P	RR	S	U	Z	ZZ
20	18	15.5	13	9	24	25	10	19	8	$20^{0}_{-0.033}$	13	10.5	8	41	5	28	5	6	30	M8 x 1.25	24	M20 x 1.5	1/8	9	62	14	133	142
25	22	19.5	17	9	30	25	10	19	10	$26^{0}_{-0.033}$	13	10.5	8	45	6	33.5	5.5	8	30	M10 x 1.25	30	M26 x 1.5	1/8	9	62	14	137	146
32	22	19.5	17	9	30	25	10	19	12	$26^{0}_{-0.033}$	13	10.5	8	45	6	37.5	5.5	10	30	M10 x 1.25	34.5	M26 x 1.5	1/8	9	64	14	139	148
40	24	21	22	10	38	41.2	15	30	14	$32^{0}_{-0.039}$	16	13.5	11	50	8	46.5	7	12	39	M14 x 1.5	42.5	M32 x 2	1/4	11	88	18	177	188

∗ A clevis pin and retaining rings (split pins for Ø 40) are shipped together with the product.

With Air Cushion [mm]

Bore size	WA
20	12
25	12
32	11
40	16

Female Rod End [mm]

Bore size	A1	H	MM	ZZ
20	8	20	M4 x 0.7	121
25	8	20	M5 x 0.8	121
32	12	20	M6 x 1	123
40	13	21	M8 x 1.25	159

∗ When a female thread is used, use a thin wrench when tightening the piston rod.
∗ When a female thread is used, depending on the material of the workpiece, use a washer etc., to prevent the contact part at the rod end from being deformed.

Rod Trunnion (U)

CM2U [Bore size] — [Stroke] [ ] **Z1**

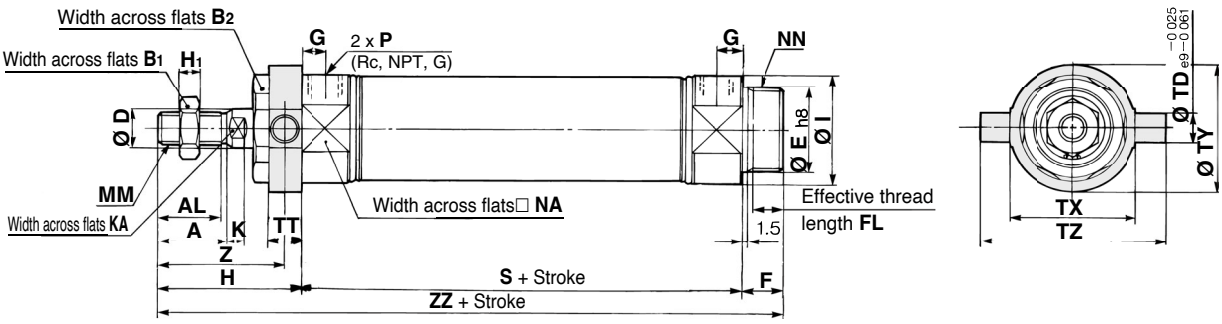

Boss-cut

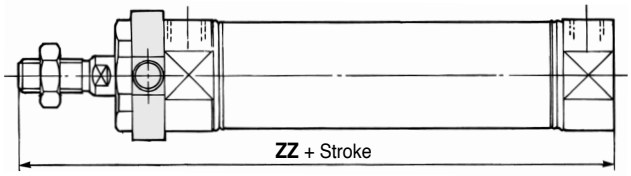

With air cushion

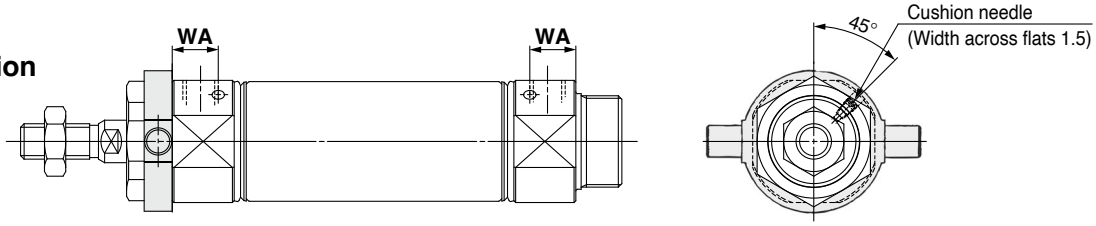

Female rod end

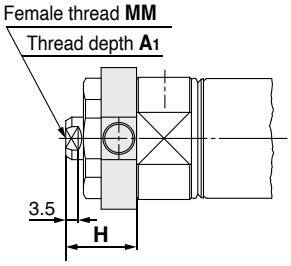

The max. stroke of the cylinder with a rod boot is 1000 mm.
Refer to page 19 for rod boot mounting dimensions.

[mm]

Bore size	A	AL	B_1	B_2	D	E	F	FL	G	H	H_1	I	K	KA	MM	NA	NN	P
20	18	15.5	13	26	8	$20^{0}_{-0.033}$	13	10.5	8	41	5	28	5	6	M8 x 1.25	24	M20 x 1.5	1/8
25	22	19.5	17	32	10	$26^{0}_{-0.033}$	13	10.5	8	45	6	33.5	5.5	8	M10 x 1.25	30	M26 x 1.5	1/8
32	22	19.5	17	32	12	$26^{0}_{-0.033}$	13	10.5	8	45	6	37.5	5.5	10	M10 x 1.25	34.5	M26 x 1.5	1/8
40	24	21	22	41	14	$32^{0}_{-0.039}$	16	13.5	11	50	8	46.5	7	12	M14 x 1.5	42.5	M32 x 2	1/4

[mm]

Bore size	S	TD	TT	TX	TY	TZ	Z	ZZ
20	62	8	10	32	32	52	36	116
25	62	9	10	40	40	60	40	120
32	64	9	10	40	40	60	40	122
40	88	10	11	53	53	77	44.5	154

Boss-cut [mm]

Bore size	ZZ
20	103
25	107
32	109
40	138

With Air Cushion [mm]

Bore size	WA
20	12
25	12
32	11
40	16

Female Rod End [mm]

Bore size	A_1	H	MM	ZZ
20	8	20	M4 x 0.7	95
25	8	20	M5 x 0.8	95
32	12	20	M6 x 1	97
40	13	21	M8 x 1.25	125

∗ When a female thread is used, use a thin wrench when tightening the piston rod.
∗ When a female thread is used, depending on the material of the workpiece, use a washer etc., to prevent the contact part at the rod end from being deformed.

∗ The bracket is shipped together with the product.

Head Trunnion (T)

CM2T [Bore size] — [Stroke] [ ] **Z1**

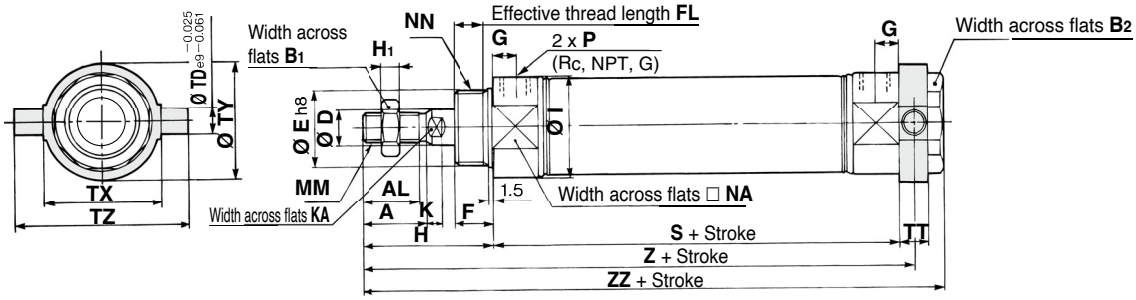

With air cushion

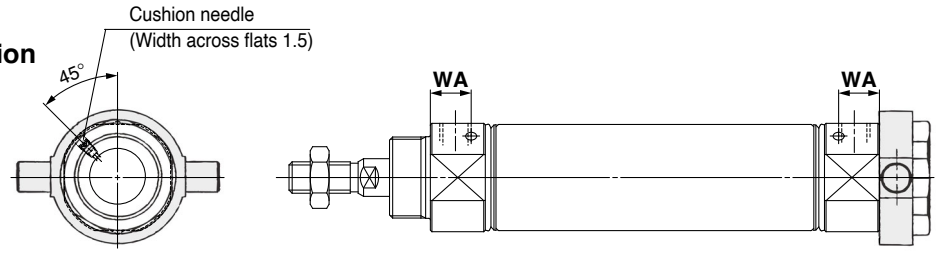

Female rod end

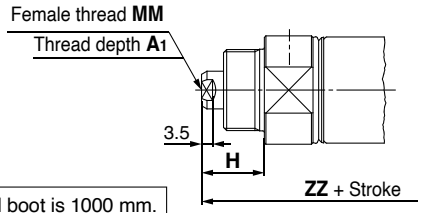

The max. stroke of the cylinder with a rod boot is 1000 mm.
Refer to page 19 for rod boot mounting dimensions.

[mm]

Bore size	A	AL	B_1	B_2	D	E	F	FL	G	H	H_1	I	K	KA	MM	NA	NN	P
20	18	15.5	13	26	8	$20^{0}_{-0.033}$	13	10.5	8	41	5	28	5	6	M8 x 1.25	24	M20 x 1.5	1/8
25	22	19.5	17	32	10	$26^{0}_{-0.033}$	13	10.5	8	45	6	33.5	5.5	8	M10 x 1.25	30	M26 x 1.5	1/8
32	22	19.5	17	32	12	$26^{0}_{-0.033}$	13	10.5	8	45	6	37.5	5.5	10	M10 x 1.25	34.5	M26 x 1.5	1/8
40	24	21	22	41	14	$32^{0}_{-0.039}$	16	13.5	11	50	8	46.5	7	12	M14 x 1.5	42.5	M32 x 2	1/4

[mm]

Bore size	S	TD	TT	TX	TY	TZ	Z	ZZ
20	62	8	10	32	32	52	108	118
25	62	9	10	40	40	60	112	122
32	64	9	10	40	40	60	114	124
40	88	10	11	53	53	77	143.5	154

∗ The bracket is shipped together with the product.

With Air Cushion [mm]

Bore size	WA
20	12
25	12
32	11
40	16

Female Rod End [mm]

Bore size	A_1	H	MM	ZZ
20	8	20	M4 x 0.7	97
25	8	20	M5 x 0.8	97
32	12	20	M6 x 1	99
40	13	21	M8 x 1.25	125

∗ When a female thread is used, use a thin wrench when tightening the piston rod.
∗ When a female thread is used, depending on the material of the workpiece, use a washer etc., to prevent the contact part at the rod end from being deformed.

Integrated Clevis (E)

CM2E [Bore size] — [Stroke] [ ] **Z1**

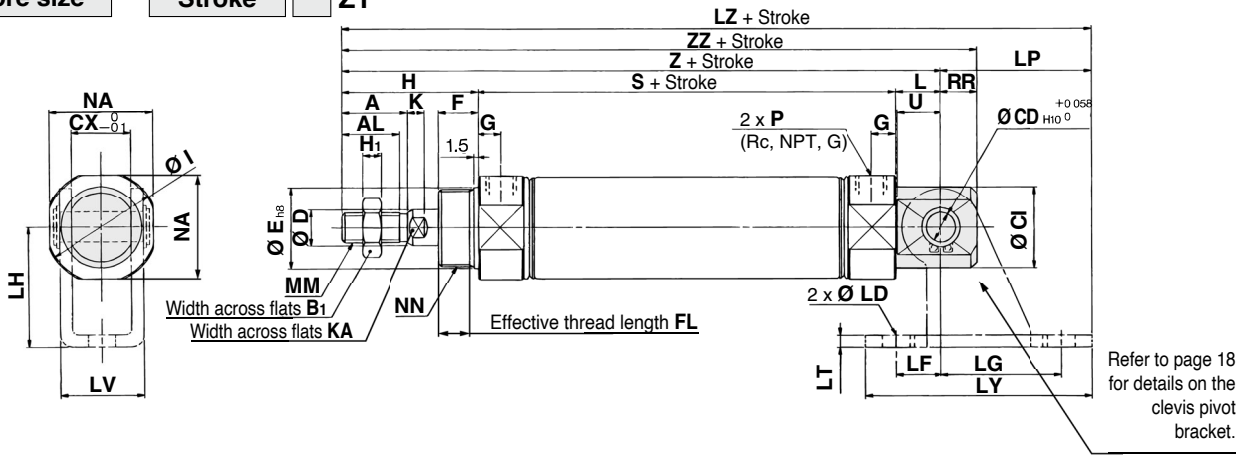

With air cushion

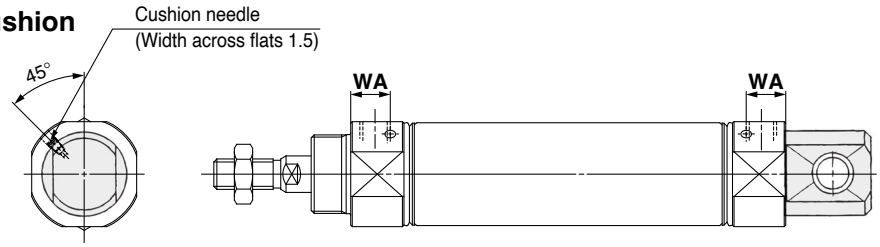

Integrated clevis (90°)(V)

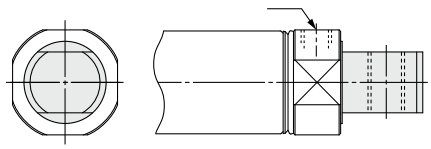

Female rod end

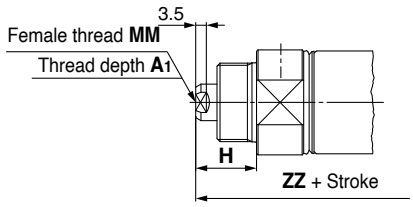

∗ The dimensions are the same as those for the integrated clevis (**E**).

The max. stroke of the cylinder with a rod boot is 1000 mm.
Refer to page 19 for rod boot mounting dimensions.

[mm]

Bore size	A	AL	B_1	CD	CI	CX	D	E	F	FL	G	H	H_1	I	K	KA	L	MM	NA	NN
20	18	15.5	13	8	20	12	8	$20^{0}_{-0.033}$	13	10.5	8	41	5	28	5	6	12	M8 x 1.25	24	M20 x 1.5
25	22	19.5	17	8	22	12	10	$26^{0}_{-0.033}$	13	10.5	8	45	6	33.5	5.5	8	12	M10 x 1.25	30	M26 x 1.5
32	22	19.5	17	10	27	20	12	$26^{0}_{-0.033}$	13	10.5	8	45	6	37.5	5.5	10	15	M10 x 1.25	34.5	M26 x 1.5
40	24	21	22	10	33	20	14	$32^{0}_{-0.039}$	16	13.5	11	50	8	46.5	7	12	15	M14 x 1.5	42.5	M32 x 2

[mm]

Bore size	P	RR	S	U	Z	ZZ
20	1/8	9	62	11.5	115	124
25	1/8	9	62	11.5	119	128
32	1/8	12	64	14.5	124	136
40	1/4	12	88	14.5	153	165

With Air Cushion [mm]

Bore size	WA
20	12
25	12
32	11
40	16

Female Rod End [mm]

Bore size	A_1	H	MM	ZZ
20	8	20	M4 x 0.7	103
25	8	20	M5 x 0.8	103
32	12	20	M6 x 1	111
40	13	21	M8 x 1.25	136

∗ When a female thread is used, use a thin wrench when tightening the piston rod.
∗ When a female thread is used, depending on the material of the workpiece, use a washer etc., to prevent the contact part at the rod end from being deformed.

Clevis Pivot Bracket [mm]

Bore size	LD	LF	LG	LH	LP	LT	LV	LY	LZ
20	6.8	15	30	30	37	3.2	18.4	59	152
25	6.8	15	30	30	37	3.2	18.4	59	156
32	9	15	40	40	50	4	28	75	174
40	9	15	40	40	50	4	28	75	203

Rod Boot Mounting Dimensions

Single rod type

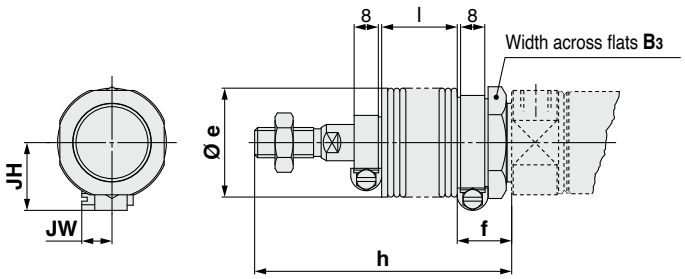

[mm]

Symbol / Stroke / Bore size	B_3	e	f	h											
				1 to 50	51 to 100	101 to 150	151 to 200	201 to 300	301 to 400	401 to 500	501 to 600	601 to 700	701 to 800	801 to 900	901 to 1000
20	30	36	18	68	81	93	106	131	156	181	206	231	256	281	306
25	32	36	18	72	85	97	110	135	160	185	210	235	260	285	310
32	32	36	18	72	85	97	110	135	160	185	210	235	260	285	310
40	41	46	20	77	90	102	115	140	165	190	215	240	265	290	315

[mm]

Symbol / Stroke / Bore size	ℓ												JH	JW
	1 to 50	51 to 100	101 to 150	151 to 200	201 to 300	301 to 400	401 to 500	501 to 600	601 to 700	701 to 800	801 to 900	901 to 1000		
20	12.5	25	37.5	50	75	100	125	150	175	200	225	250	23.5	10.5
25	12.5	25	37.5	50	75	100	125	150	175	200	225	250	23.5	10.5
32	12.5	25	37.5	50	75	100	125	150	175	200	225	250	23.5	10.5
40	12.5	25	37.5	50	75	100	125	150	175	200	225	250	27	10.5

Dimensions of Accessories

With Single Knuckle Joint

[mm]

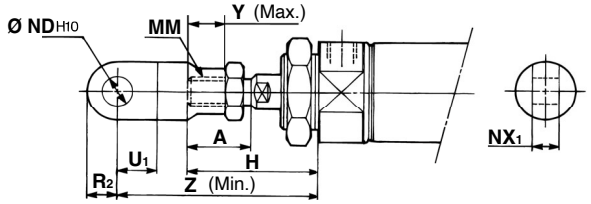

Bore size	A	H	MM	ND_{H10}	NX_1	U_1	R_2	Y	Z
20	18	41	M8 x 1.25	$9^{+0.058}_{0}$	$9^{-0.1}_{-0.2}$	14	10	11	66
25, 32	22	45	M10 x 1.25	$9^{+0.058}_{0}$	$9^{-0.1}_{-0.2}$	14	10	14	69
40	24	50	M14 x 1.5	$12^{+0.070}_{0}$	$16^{-0.1}_{-0.3}$	20	14	13	92

Single Knuckle Joint

[mm]

I-020B, 032B **I-040B**

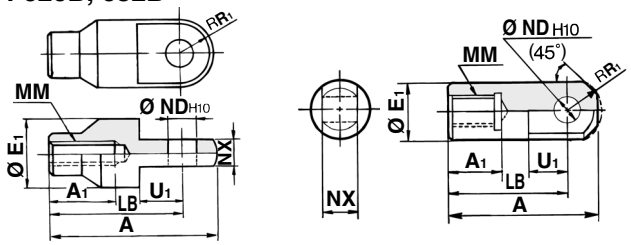

Part no.	Material	Applicable bore size	A	A_1	E_1	LB	MM	ND_{H10}	NX	R_1	U_1
I-020B	Carbon steel	**20**	46	16	20	36	M8 x 1.25	$9^{+0.058}_{0}$	$9^{-0.1}_{-0.2}$	10	14
I-020BSUS	Stainless steel										
I-032B	Carbon steel	**25, 32**	48	18	20	38	M10 x 1.25	$9^{+0.058}_{0}$	$9^{-0.1}_{-0.2}$	10	14
I-032BSUS	Stainless steel										
I-040B	Free-cutting steel	**40**	69	22	24	55	M14 x 1.5	$12^{+0.070}_{0}$	$16^{-0.1}_{-0.3}$	15.5	20
I-040BSUS	Stainless steel										

With Double Knuckle Joint

[mm]

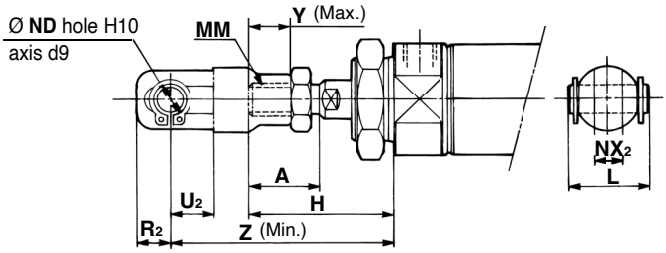

Bore size	A	H	L	MM	ND	NX_2	R_2	U_2	Y	Z
20	18	41	25	M8 x 1.25	9	$9^{+0.2}_{+0.1}$	10	14	11	66
25, 32	22	45	25	M10 x 1.25	9	$9^{+0.2}_{+0.1}$	10	14	14	69
40	24	50	49.7	M14 x 1.5	12	$16^{+0.3}_{+0.1}$	13	25	13	92

Double Knuckle Joint

[mm]

Y-020B, Y-032B **Y-040B**

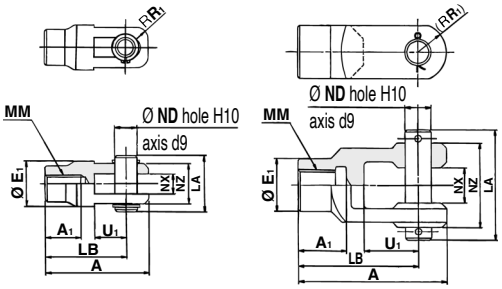

Part no.	Material	Applicable bore size	A	A_1	E_1	LA	LB	MM	ND	NX	NZ	R_1	U_1	Included pin part no.	Retaining ring / Split pin size
Y-020B	Carbon steel	**20**	46	16	20	25	36	M8 x 1.25	9	$9^{+0.2}_{+0.1}$	18	5	14	CDP-1	Type C9 for axis
Y-020BSUS	Stainless steel													CDP-1-XC27	
Y-032B	Carbon steel	**25, 32**	48	18	20	25	38	M10 x 1.25	9	$9^{+0.2}_{+0.1}$	18	5	14	CDP-1	Type C9 for axis
Y-032BSUS	Stainless steel													CDP-1-XC27	
Y-040B	Cast iron	**40**	68	22	24	49.7	55	M14 x 1.5	12	$16^{+0.3}_{+0.1}$	38	13	25	CDP-3	Ø 3 x 18 L
Y-040BSUS	Stainless steel											7 (Chamfered shape)		CDP-3-XC27	

∗ A knuckle pin and retaining rings (split pins for Ø 40) are included.

Rod End

KJ□D

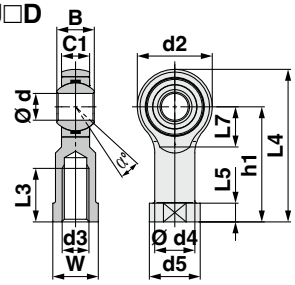

[mm]

Part no.	Material	Applicable bore size	d_{H7}	d3	$B^{+0}_{-0.12}$	C1	d2	d4	d5	h1	$L3_{min}$	L4	L5	L7	W	α°	Allowable radial static load [KN]	Weight [kg]
KJ8D	Carbon steel	**20**	8	M8 x 1.25	12	9	24	12.5	16	36	16	48	5	13	14	14	12	0.05
KJ10D	Carbon steel	**25, 32**	10	M10 x 1.25	14	10.5	28	15	19	43	20	57	6.5	15	17	13	14	0.07
KJ14D	Carbon steel	**40**	14	M14 x 1.5	19	13.5	36	20	25	57	25	75	8	19	22	15	36	0.16

· The allowable radial load shows the allowable value of a single rod end. When the rod end is used for connecting to a cylinder, the allowable radial load conforms to the cylinder specifications.

∗ Refer to the **catalogue on www.smc.eu** for specifications and precautions.

Double Clevis Pin

[mm]

Bore size: Ø 20, Ø 25, Ø 32

CDP-1: Carbon steel
CDP-1-XC27: Stainless steel

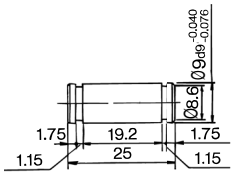

Retaining ring: Type C9 for axis

Bore size: Ø 40

CDP-2: Carbon steel
CDP-2-XC27: Stainless steel

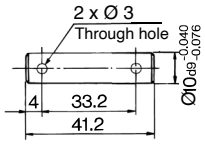

Split pin: Ø 3 x 18 L

∗ Retaining rings (split pins for Ø 40) are included.

Double Knuckle Pin

[mm]

Bore size: Ø 20, Ø 25, Ø 32

CDP-1: Carbon steel
CDP-1-XC27: Stainless steel

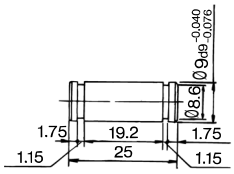

Retaining ring: Type C9 for axis

Bore size: Ø 40

CDP-3: Carbon steel
CDP-3-XC27: Stainless steel

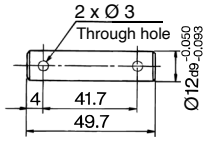

Split pin: Ø 3 x 18 L

∗ Retaining rings (split pins for Ø 40) are included.

Rod End Nut

[mm]

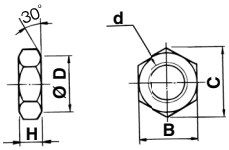

Part no.	Material	Applicable bore size	B	C	D	d	H
NT-02	Carbon steel	**20**	13	15	12.5	M8 x 1.25	5
NT-02SUS	Stainless steel						
NT-03	Carbon steel	**25, 32**	17	19.6	16.5	M10 x 1.25	6
NT-03SUS	Stainless steel						
NT-04	Carbon steel	**40**	22	25.4	21	M14 x 1.5	8
NT-04SUS	Stainless steel						

Mounting Nut

[mm]

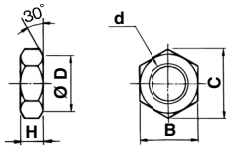

Part no.	Material	Applicable bore size	B	C	D	d	H
SN-020B	Carbon steel	**20**	26	30	25.5	M20 x 1.5	8
SN-020BSUS	Stainless steel						
SN-032B	Carbon steel	**25, 32**	32	37	31.5	M26 x 1.5	8
SN-032BSUS	Stainless steel						
SN-040B	Carbon steel	**40**	41	47.3	40.5	M32 x 2.0	10
SN-040BSUS	Stainless steel						

Clevis Pivot Bracket (For CM2E(V))

[mm]

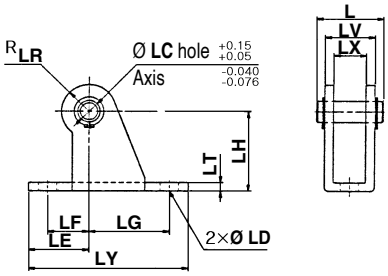

Part no.	Material	Applicable bore size	L	LC	LD	LE	LF	LG	LH	LR
CM-E020B	Carbon steel	**20, 25**	24.5	8	6.8	22	15	30	30	10
CM-E032B	Carbon steel	**32, 40**	34	10	9	25	15	40	40	13

Part no.	Material	Applicable bore size	LT	LX	LY	LV	Included pin part no.
CM-E020B	Carbon steel	**20, 25**	3.2	12	59	18.4	CD-S02
CM-E032B	Carbon steel	**32, 40**	4	20	75	28	CD-S03

∗ A clevis pivot bracket pin and retaining rings are included.
∗ It cannot be used for the single clevis (CM2C) and the double clevis (CM2D).

Trunnion Nut

[mm]

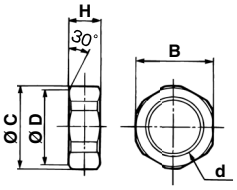

Part no.	Material	Applicable bore size	B	C	D	d	H
TN-020B	Carbon steel	**20**	26	28	25.5	M20 x 1.5	10
TN-032B	Carbon steel	**25, 32**	32	34	31.5	M26 x 1.5	10
TN-040B	Carbon steel	**40**	41	45	40.5	M32 x 2	10

Clevis Pivot Bracket Pin (For CM2E(V))

[mm]

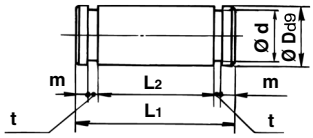

Part no.	Material	Applicable bore size	D_{d9}	d	L_1	L_2	m	t	Included retaining ring
CD-S02	Carbon steel	**20, 25**	$8^{-0.040}_{-0.076}$	7.6	24.5	19.5	1.6	0.9	Type C8 for axis
CD-S03	Carbon steel	**32, 40**	$10^{-0.040}_{-0.076}$	9.6	34	29	1.35	1.15	Type C10 for axis

∗ Retaining rings are included.

Mounting Brackets, Rod End Brackets, and Nut Material: Stainless Steel

Part Nos. (Dimensions: Same as those of the standard type)

Bore size [mm]	Foot	Flange	Single knuckle joint	Double knuckle joint∗1	Mounting nut	Rod end nut
20	CM-L020B-XB12	CM-F020BSUS	I-020BSUS	Y-020BSUS	SN-020BSUS	NT-02SUS
25, 32	CM-L032B-XB12	CM-F032BSUS	I-032BSUS	Y-032BSUS	SN-032BSUS	NT-03SUS
40	CM-L040B-XB12	CM-F040BSUS	I-040BSUS	Y-040BSUS	SN-040BSUS	NT-04SUS

∗1 A knuckle pin and retaining rings are shipped together with the product. Refer to the XC27 for details on stainless steel double clevis pins and double knuckle pins (**catalogue on www.smc.eu**). The accessories need to be ordered separately from the cylinder.

With Single Clevis

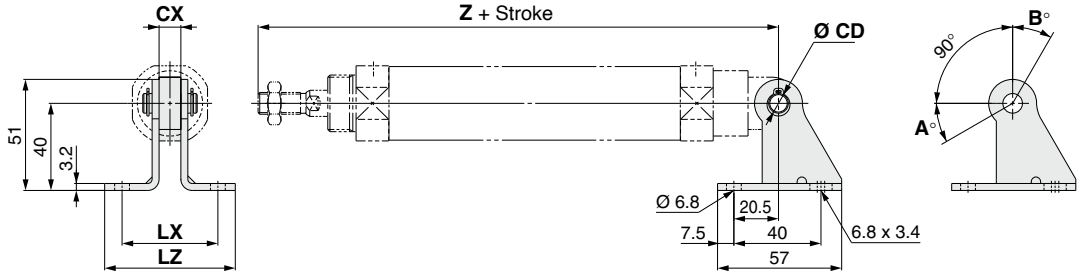

Rotation Angle

Bore size [mm]	A°	B°	A° + B° + 90°
20	25	85	200
25, 32	21	81	192
40	26	86	202

[mm]

Mounting	Part no.	Applicable bore size	CX	Z + Stroke	CD	LX	LZ
CM2C (Single clevis)	**CM-B032**	**20**	10	133	9	44	60
		25		137			
		32		139			
	CM-B040	**40**	15	177	10	49	65

∗ A pivot bracket pin and retaining rings are not included with the pivot bracket.

With Rod Trunnion

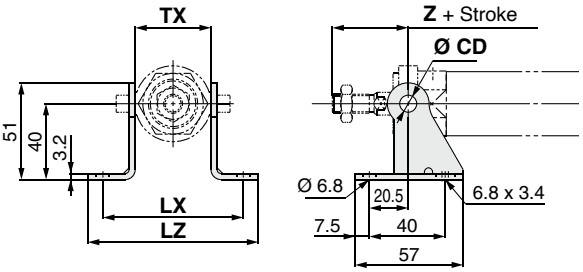

With Head Trunnion

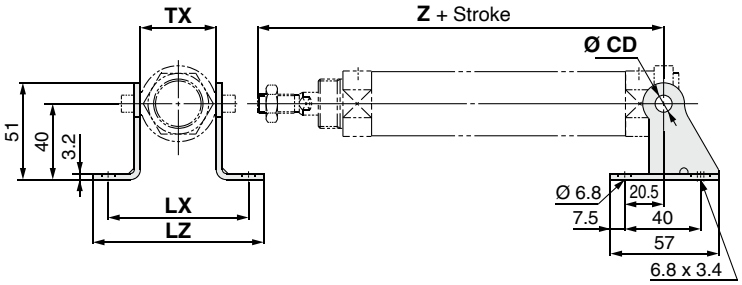

[mm]

Mounting	Part no.	Applicable bore size	TX	Rod trunnion Z + Stroke	Head trunnion Z + Stroke	CD	LX	LZ
CM2U/CM2T (Rod/Head trunnion)	CM-B020	20	32	36	108	8	66	82
	CM-B032	25	40	40	112	9	74	90
		32			114			
	CM-B040	40	53	44.5	143.5	10	87	103

∗ A pivot bracket pin and retaining rings are not included with the pivot bracket.

Pivot Bracket /Material: Carbon steel

∗ Pivot brackets consists of a set of two brackets.

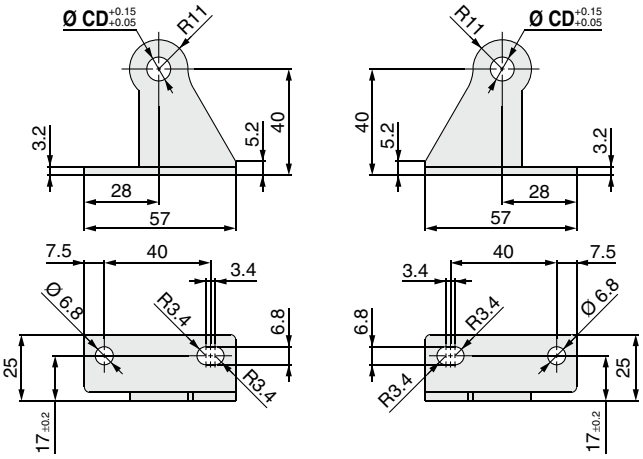

[mm]

Part no.	CD
CM-B020∗1	8
CM-B032	9
CM-B040	10

∗1 Only for the trunnion

∗ A pivot bracket pin and retaining rings are not included with the pivot bracket.

Pivot Bracket Pin (For CM2C) /Material: Carbon steel

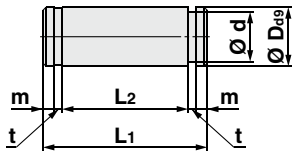

[mm]

Applicable bore size	Part no.	D_{d9}	d	L_1	L_2	m	t	Included retaining ring
20 to 32	CDP-1	$9^{-0.040}_{-0.076}$	8.6	25	19.2	1.75	1.15	Type C 9 for axis
40	CD-S03	$10^{-0.040}_{-0.076}$	9.6	34	29	1.35	1.15	Type C 10 for axis

∗ Retaining rings are included with the pivot bracket pin.

Air Cylinder: Standard Type
Double Acting, Double Rod
CM2W Series
Ø 20, Ø 25, Ø 32, Ø 40

RoHS

How to Order

Rod end thread

—	Male rod end
F	Female rod end

Rod boot

—	None
J	Nylon tarpaulin (One side)
JJ	Nylon tarpaulin (Both sides)
K	Heat-resistant tarpaulin (One side)
KK	Heat-resistant tarpaulin (Both sides)

∗ For female rod end, no rod boot is provided.

Rod end bracket

—	No bracket
V	Single knuckle joint (With 1 pc.)
W	Double knuckle joint (With 1 pc.)
Q	Rod end (With 1 pc.)

∗ No bracket is provided for the female rod end.
∗ A knuckle joint pin is not provided with the single knuckle joint.
∗ The rod end bracket is shipped together with the product but does not come assembled.

Cushion

—	Rubber bumper
A	Air cushion

Bore size

20	20 mm
25	25 mm
32	32 mm
40	40 mm

CM2W L 40 □ – 150 A □ □ Z1 – □ – □

With auto switch: CDM2W L 40 □ – 150 A □ □ Z1 – □ – M9BW □ – □

With auto switch (Built-in magnet)

Mounting

B	Basic (Double-side bossed)
L	Axial foot
F	Flange
U	Trunnion

Port thread type

—	Rc
TN	NPT
TF	G

Cylinder stroke [mm]
Refer to page 25 for standard strokes.

Auto switch

—	Without auto switch

∗ For applicable auto switches, refer to the table below.

Number of auto switches

—	2
S	1
n	n

Made to order
Refer to page 25 for details.

Applicable Auto Switches/Refer to the **catalogue on www.smc.eu** for further information on auto switches.

Type	Special function	Electrical entry	Indicator light	Wiring (Output)	Load voltage DC		Load voltage AC	Auto switch model Perpendicular	Auto switch model In-line	Lead wire length [m] 0.5 (–)	1 (M)	3 (L)	5 (Z)	Pre-wired connector	Applicable load	
Solid state auto switch	———	Grommet	Yes	3-wire (NPN)	24 V	5 V, 12 V	—	M9NV	M9N	●	●	●	○	○	IC circuit	Relay, PLC
				3-wire (PNP)				M9PV	M9P	●	●	●	○	○		
				2-wire		12 V		M9BV	M9B	●	●	●	○	○	—	
	Diagnostic indication (2-colour indicator)	Grommet		3-wire (NPN)		5 V, 12 V		M9NWV	M9NW	●	●	●	○	○	IC circuit	
				3-wire (PNP)				M9PWV	M9PW	●	●	●	○	○		
				2-wire		12 V		M9BWV	M9BW	●	●	●	○	○	—	
	Water resistant (2-colour indicator)			3-wire (NPN)		5 V, 12 V		M9NAV∗1	M9NA∗1	○	○	●	○	○	IC circuit	
				3-wire (PNP)				M9PAV∗1	M9PA∗1	○	○	●	○	○		
				2-wire		12 V		M9BAV∗1	M9BA∗1	○	○	●	○	○	—	
Reed auto switch	———	Grommet	Yes	3-wire (NPN equivalent)	—	5 V	—	A96V	A96	●	●	●	●	○	IC circuit	—
			No	2-wire	24 V	12 V	100 V	A93V	A93	●	●	●	●	○∗2	—	Relay, PLC
							100 V or less	A90V	A90	●	●	●	●	○∗2	IC circuit	

∗1 Water-resistant type auto switches can be mounted on the above models, but SMC cannot guarantee water resistance.
∗2 The load voltage used is 24 VDC.

∗ Lead wire length symbols: 0.5 m ····· — (Example) M9NW
1 m ····· M (Example) M9NWM
3 m ····· L (Example) M9NWL
5 m ····· Z (Example) M9NWZ

∗ Auto switches marked with a "○" are produced upon receipt of order.

∗ Since there are applicable auto switches other than those listed above, refer to page 64 for details.
∗ For details on auto switches with pre-wired connectors, refer to the **catalogue on www.smc.eu**.
∗ The D-A9□□/M9□□□ auto switches are shipped together with the product but do not come assembled. (Only the auto switch mounting brackets are assembled before shipment.)

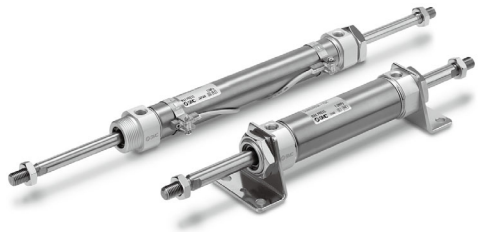

Specifications

Bore size [mm]			20	25	32	40
Action			Double acting, Double rod			
Fluid			Air			
Proof pressure			1.5 MPa			
Max. operating pressure			1.0 MPa			
Min. operating pressure			0.08 MPa			
Ambient and fluid temperatures			Without auto switch: –10 °C to 70 °C With auto switch: –10 °C to 60 °C (No freezing)			
Lubrication			Not required (Non-lube)			
Stroke length tolerance			$^{+1.4}_{0}$ mm			
Piston speed			Rubber bumper: 50 to 750 mm/s, Air cushion: 50 to 1000 mm/s			
Cushion			Rubber bumper, Air cushion			
Allowable kinetic energy	**Rubber bumper**	**Male thread**	0.27 J	0.4 J	0.65 J	1.2 J
		Female thread	0.11 J	0.18 J	0.29 J	0.52 J
	Air cushion (Effective cushion length [mm])	**Male thread**	0.54 J (11.0)	0.78 J (11.0)	1.27 J (11.0)	2.35 J (11.8)
		Female thread	0.11 J	0.18 J	0.29 J	0.52 J

Symbol

Rubber bumper

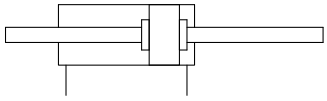

Air cushion

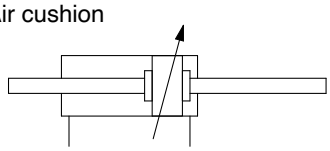

Standard Strokes

Bore size [mm]	Standard stroke [mm]*1	Manufacturable*2 stroke [mm]
20	25, 50, 75, 100, 125, 150, 200, 250, 300	5 to 800 (500*3)
25		
32		
40		

*1 Intermediate strokes not listed above are produced upon receipt of order. The manufacturing of intermediate strokes in 1 mm increments is possible. (Spacers are not used.)
*2 Using a stroke of a length which is smaller than the effective cushion length may result in reduced air cushion performance. Refer to "Technical Data 1" in the catalogue on www.smc.eu for details on the effective cushion length.
*3 The value in brackets indicates the max. stroke of the cylinder with a rod boot.
* Applicable strokes should be confirmed according to the usage. For details, refer to the "Air Cylinders Model Selection" in the **catalogue on www.smc.eu**. In addition, the products that exceed the standard stroke might not be able to fulfill the specifications due to deflection, etc.
* The min. stroke of the type with a magnet varies depending on the switch. For details, refer to pages 62 and 66.

Made to Order

Made to Order Common Specifications
(For details, refer to pages 67 to 74.)

Symbol	Specifications
-XB6	Heat-resistant cylinder (–10 to 150 °C)
-XB7	Cold-resistant cylinder (–40 to 70 °C)*1
-XC3	Special port location*1
-XC38	Vacuum specification (Rod through-hole)*1
-XC52	Mounting nut with set screw

*1 Rubber bumper only

Accessories

* Refer to pages 20 to 23 for accessories, since it is the same as standard type, double acting, single rod.

* Stainless steel mounting brackets and accessories are also available. Refer to page 22 for details.

Rod Boot Material

Symbol		Rod boot material	Max. ambient temp.
One side	Both sides		
J	**JJ**	Nylon tarpaulin	70 °C
K	**KK**	Heat-resistant tarpaulin	110 °C*1

*1 Max. ambient temperature for rod boot itself

Mounting Brackets/Part Nos.

Mounting bracket	Min. order quantity	Bore size [mm]				Contents (for min. order quantity)
		20	**25**	**32**	**40**	
Axial foot*1	2	CM-L020B	CM-L032B		CM-L040B	2 foot brackets, 1 mounting nut
Flange	1	CM-F020B	CM-F032B		CM-F040B	1 flange
Trunnion (with nut)	1	CM-T020B	CM-T032B		CM-T040B	1 trunnion, 1 trunnion nut
Single knuckle joint	1	I-020B	I-032B		I-040B	1 single knuckle joint
Double knuckle joint	1	Y-020B	Y-032B		Y-040B	1 double knuckle joint, 1 knuckle pin, 2 retaining rings
Rod end	1	KJ8D	KJ10D		KJ14D	1 rod end
Double knuckle joint pin	1	CDP-1			CDP-3	1 knuckle pin, 2 retaining rings (split pins)

*1 Order two foot brackets per cylinder.

Refer to pages 61 to 65 for cylinders with auto switches.
· Auto Switch Proper Mounting Position (Detection at stroke end) and Mounting Height
· Minimum Stroke for Auto Switch Mounting
· Operating Range
· Auto Switch Mounting Brackets/Part Nos.

Mounting and Accessories

Accessories / Mounting	Standard		Option			
	Mounting nut	Rod end nut	Single knuckle joint	Double knuckle joint *2	Rod end	Rod boot
Basic (Double-side bossed)	● (1 pc.)	● (2 pcs.)	●	●	●	●
Axial foot	● (2 pcs.)	● (2 pcs.)	●	●	●	●
Flange	● (1 pc.)	● (2 pcs.)	●	●	●	●
Trunnion	● (1 pc.)*1	● (2 pcs.)	●	●	●	●
Note						One/Both side(s)

*1 Trunnion nut is attached to the trunnion.
*2 A pin and retaining rings (split pins for Ø 40) are shipped together with double knuckle joint.

Weight

[kg]

Bore size [mm]		20	25	32	40
Basic weight	Basic (Double-side bossed)	0.16	0.25	0.32	0.65
	Axial foot	0.31	0.41	0.48	0.92
	Flange	0.22	0.34	0.41	0.77
	Trunnion	0.20	0.32	0.38	0.75
Additional weight per 50 mm of stroke		0.06	0.09	0.13	0.19
Weight reduction for female rod end		–0.02	–0.04	–0.04	–0.08
Option bracket	Single knuckle joint	0.06	0.06	0.06	0.23
	Double knuckle joint (with pin)	0.07	0.07	0.07	0.20
	Rod end	0.05	0.07	0.07	0.16

Calculation: (Example) **CM2WL32-100Z1**
- Basic weight……0.48 (Foot, Ø 32)
- Additional weight……0.13/50 mm stroke
- Cylinder stroke……100 mm stroke

0.48 + 0.13 x 100/50 = **0.74 kg**

Construction

Rubber bumper

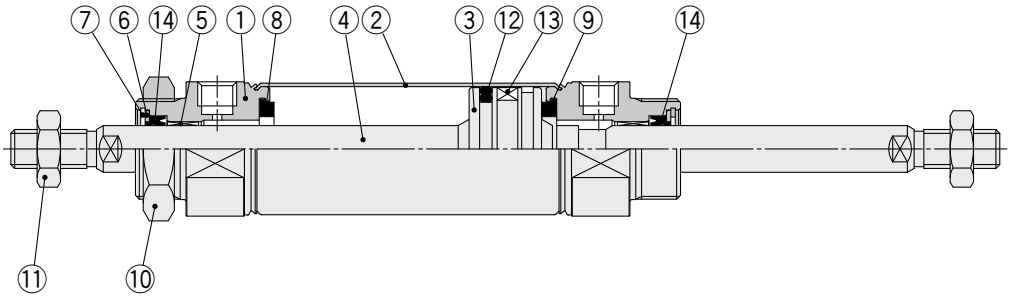

With air cushion

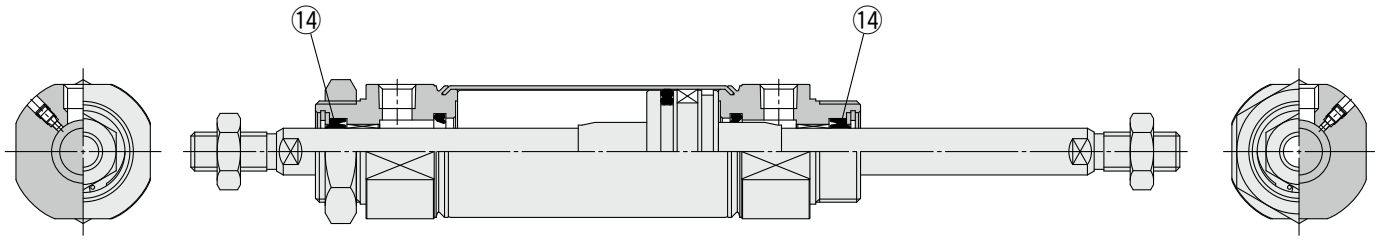

Component Parts

No.	Description	Material	Note
1	**Rod cover**	Aluminium alloy	Anodised
2	**Cylinder tube**	Stainless steel	
3	**Piston**	Aluminium alloy	
4	**Piston rod**	Carbon steel	Hard chrome plating
5	**Bushing**	Bearing alloy	
6	**Seal retainer**	Stainless steel	
7	**Retaining ring**	Carbon steel	Phosphate coating
8	**Bumper**	Resin	
9	**Bumper**	Resin	
10	**Mounting nut**	Carbon steel	Nickel plating
11	**Rod end nut**	Carbon steel	Zinc chromating
12	**Piston seal**	NBR	
13	**Magnet**	—	CDM2W□20 to 40-□Z1
14	**Rod seal**	NBR	

Replacement Parts: Seal

● With Rubber Bumper/With Air Cushion

No.	Description	Material	Part no.			
			20	25	32	40
14	**Rod seal**	NBR	CM20Z-PS	CM25Z-PS	CM32Z-PS	CM40Z-PS

* Since the seal does not include a grease pack, order it separately.
Grease pack part number: GR-S-010 (10 g)

Basic (Double-side Bossed) (B)

CM2WB Bore size — Stroke Z1

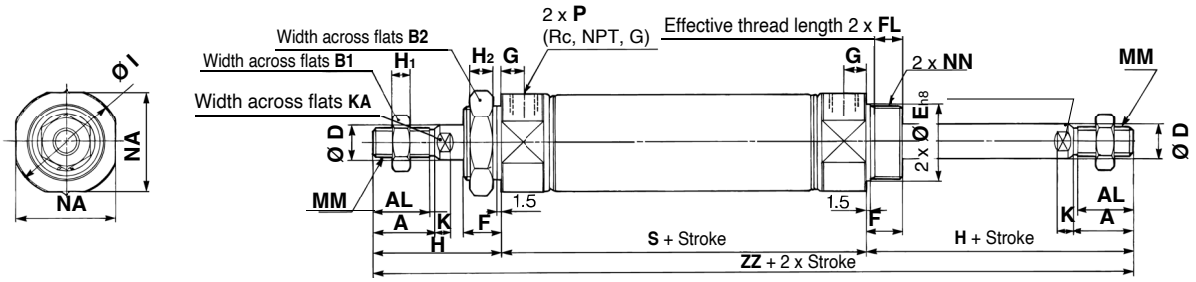

With air cushion

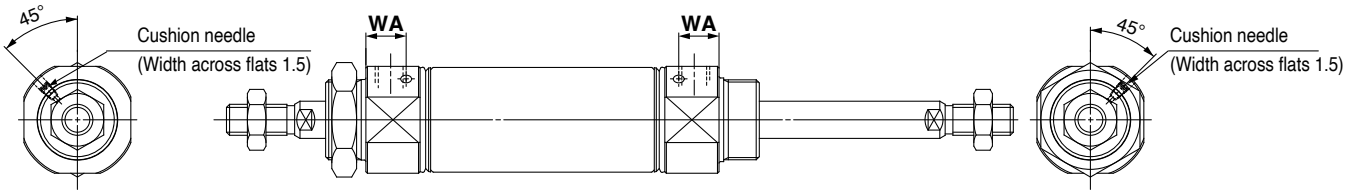

Female rod end

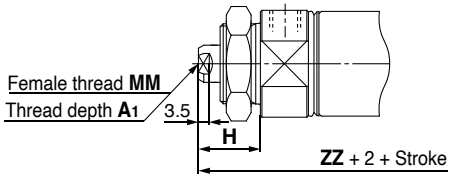

The max. stroke of the cylinder with a rod boot is 500 mm.
Refer to page 31 for rod boot mounting dimensions.

[mm]

Bore size	A	AL	B_1	B_2	D	E	F	FL	G	H	H_1	H_2	I	K	KA	MM	NA	NN	P	S	ZZ
20	18	15.5	13	26	8	$20^{0}_{-0.033}$	13	10.5	8	41	5	8	28	5	6	M8 x 1.25	24	M20 x 1.5	1/8	62	144
25	22	19.5	17	32	10	$26^{0}_{-0.033}$	13	10.5	8	45	6	8	33.5	5.5	8	M10 x 1.25	30	M26 x 1.5	1/8	62	152
32	22	19.5	17	32	12	$26^{0}_{-0.033}$	13	10.5	8	45	6	8	37.5	5.5	10	M10 x 1.25	34.5	M26 x 1.5	1/8	64	154
40	24	21	22	41	14	$32^{0}_{-0.039}$	16	13.5	11	50	8	10	46.5	7	12	M14 x 1.5	42.5	M32 x 2	1/4	88	188

With Air Cushion [mm]

Bore size	WA
20	12
25	12
32	11
40	16

Female Rod End [mm]

Bore size	A_1	H	MM	ZZ
20	8	20	M4 x 0.7	102
25	8	20	M5 x 0.8	102
32	12	20	M6 x 1	104
40	13	21	M8 x 1.25	130

* When a female thread is used, use a thin wrench when tightening the piston rod.
* When a female thread is used, depending on the material of the workpiece, use a washer etc., to prevent the contact part at the rod end from being deformed.

Axial Foot (L)

CM2WL [Bore size] — [Stroke] [ ] **Z1**

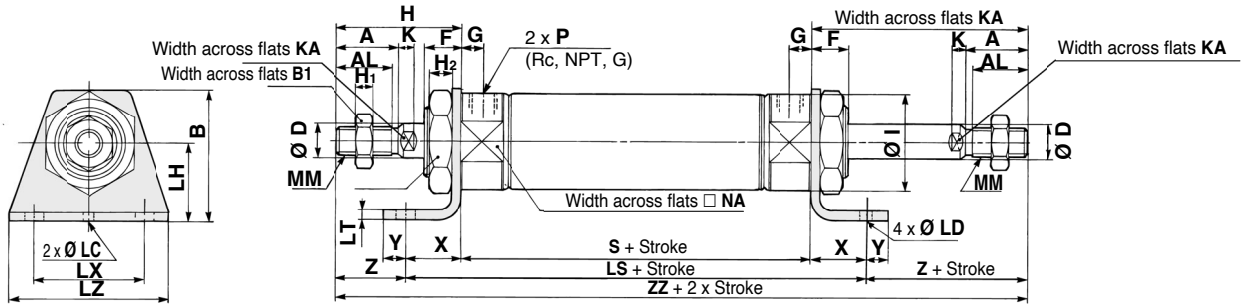

With air cushion

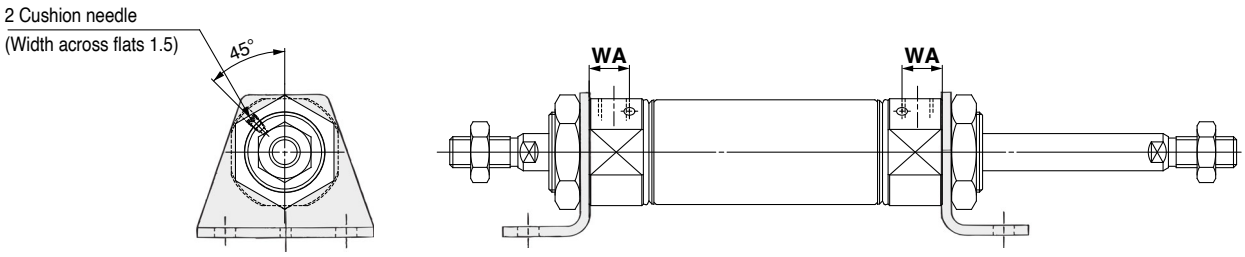

Female rod end

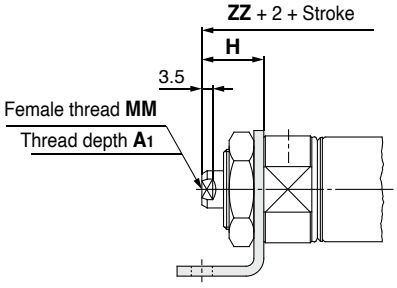

The max. stroke of the cylinder with a rod boot is 500 mm.
Refer to page 31 for rod boot mounting dimensions.

[mm]

Bore size	A	AL	B	B_1	B_2	D	F	G	H	H_1	H_2	I	K	KA	LC	LD	LH	LS	LT	LX	LZ	MM	NA	P	S	X	Y	Z	ZZ
20	18	15.5	40	13	26	8	13	8	41	5	8	28	5	6	4	6.8	25	102	3.2	40	55	M8 x 1.25	24	1/8	62	20	8	21	144
25	22	19.5	47	17	32	10	13	8	45	6	8	33.5	5.5	8	4	6.8	28	102	3.2	40	55	M10 x 1.25	30	1/8	62	20	8	25	152
32	22	19.5	47	17	32	12	13	8	45	6	8	37.5	5.5	10	4	6.8	28	104	3.2	40	55	M10 x 1.25	34.5	1/8	64	20	8	25	154
40	24	21	54	22	41	14	16	11	50	8	10	46.5	7	12	4	7	30	134	3.2	55	75	M14 x 1.5	42.5	1/4	88	23	10	27	188

∗ The bracket is shipped together with the product.

With Air Cushion [mm]

Bore size	WA
20	12
25	12
32	11
40	16

Female Rod End [mm]

Bore size	A_1	H	MM	ZZ
20	8	20	M4 x 0.7	102
25	8	20	M5 x 0.8	102
32	12	20	M6 x 1	104
40	13	21	M8 x 1.25	130

∗ When a female thread is used, use a thin wrench when tightening the piston rod.
∗ When a female thread is used, depending on the material of the workpiece, use a washer etc., to prevent the contact part at the rod end from being deformed.

Flange (F)

CM2WF Bore size — Stroke Z1

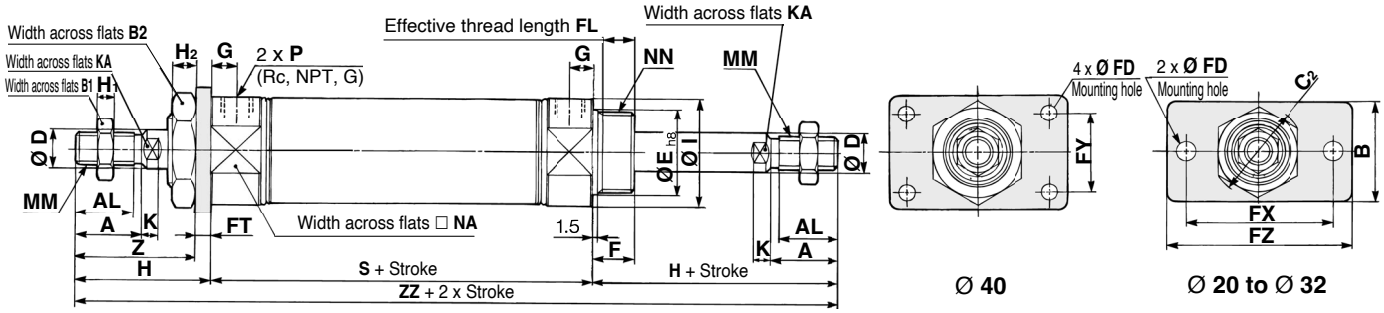

With air cushion

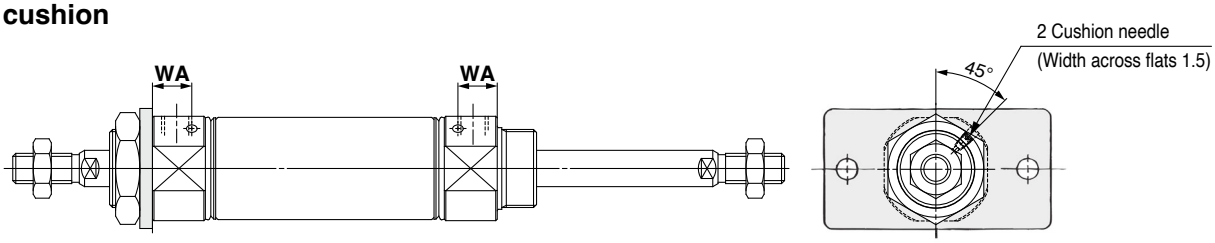

Female rod end

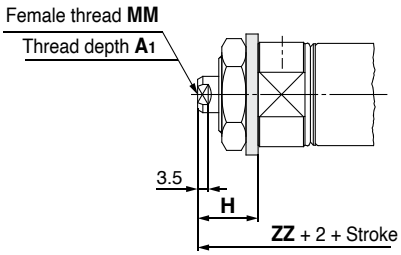

The max. stroke of the cylinder with a rod boot is 500 mm.
Refer to page 31 for rod boot mounting dimensions.

[mm]

Bore size	A	AL	B	B_1	B_2	C_2	D	E	F	FD	FL	FT	FX	FY	FZ	G	H	H_1	H_2	I	K	KA	MM
20	18	15.5	34	13	26	30	8	$20^{0}_{-0.033}$	13	7	10.5	4	60	–	75	8	41	5	8	28	5	6	M8 x 1.25
25	22	19.5	40	17	32	37	10	$26^{0}_{-0.033}$	13	7	10.5	4	60	–	75	8	45	6	8	33.5	5.5	8	M10 x 1.25
32	22	19.5	40	17	32	37	12	$26^{0}_{-0.033}$	13	7	10.5	4	60	–	75	8	45	6	8	37.5	5.5	10	M10 x 1.25
40	24	21	52	22	41	47.3	14	$32^{0}_{-0.039}$	16	7	13.5	5	66	36	82	11	50	8	10	46.5	7	12	M14 x 1.5

[mm]

Bore size	NA	NN	P	S	Z	ZZ
20	24	M20 x 1.5	1/8	62	37	144
25	30	M26 x 1.5	1/8	62	41	152
32	34.5	M26 x 1.5	1/8	64	41	154
40	42.5	M32 x 2	1/4	88	45	188

∗ The bracket is shipped together with the product.

With Air Cushion [mm]

Bore size	WA
20	12
25	12
32	11
40	16

Female Rod End [mm]

Bore size	A_1	H	MM	ZZ
20	8	20	M4 x 0.7	102
25	8	20	M5 x 0.8	102
32	12	20	M6 x 1	104
40	13	21	M8 x 1.25	130

∗ When a female thread is used, use a thin wrench when tightening the piston rod.
∗ When a female thread is used, depending on the material of the workpiece, use a washer etc., to prevent the contact part at the rod end from being deformed.

Trunnion (U)

CM2WU Bore size — Stroke ☐ **Z1**

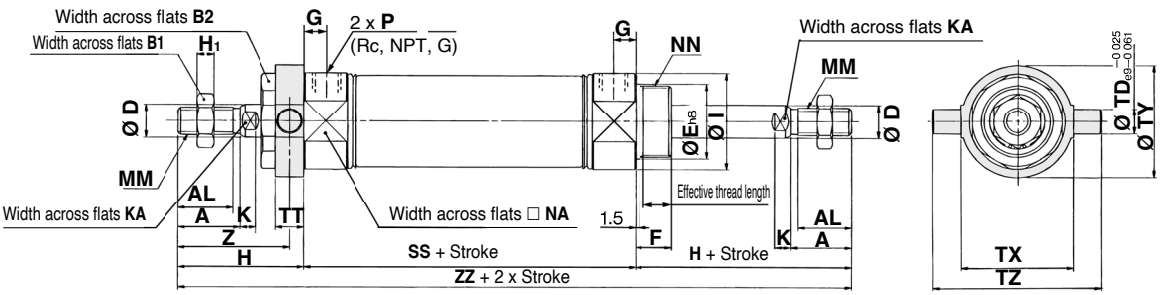

With air cushion

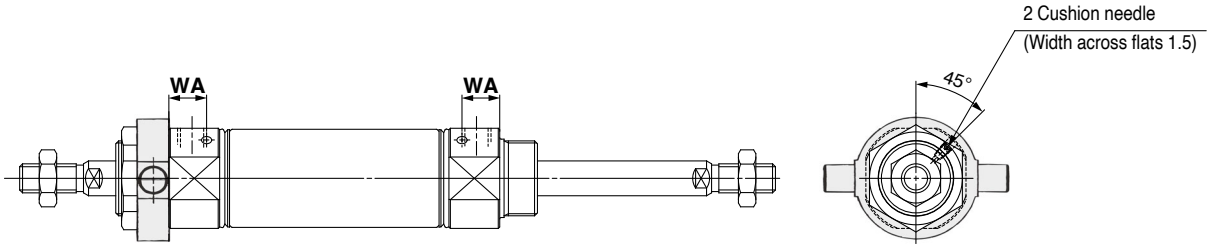

Female rod end

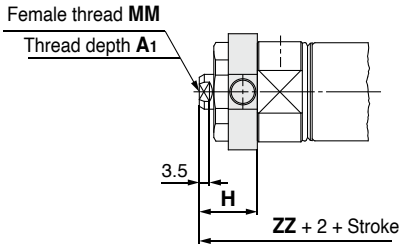

The max. stroke of the cylinder with a rod boot is 500 mm.
Refer to page 31 for rod boot mounting dimensions.

[mm]

Bore size	A	AL	B_1	B_2	D	E	F	FL	G	H	H_1	I	K	KA	MM	NA	NN	P	S	TD
20	18	15.5	13	26	8	$20^{0}_{-0.033}$	13	10.5	8	41	5	28	5	6	M8 x 1.25	24	M20 x 1.5	1/8	62	8
25	22	19.5	17	32	10	$26^{0}_{-0.033}$	13	10.5	8	45	6	33.5	5.5	8	M10 x 1.25	30	M26 x 1.5	1/8	62	9
32	22	19.5	17	32	12	$26^{0}_{-0.033}$	13	10.5	8	45	6	37.5	5.5	10	M10 x 1.25	34.5	M26 x 1.5	1/8	64	9
40	24	21	22	41	14	$32^{0}_{-0.039}$	16	13.5	11	50	8	46.5	7	12	M14 x 1.5	42.5	M32 x 2	1/4	88	10

[mm]

Bore size	TT	TX	TY	TZ	Z	ZZ
20	10	32	32	52	36	144
25	10	40	40	60	40	152
32	10	40	40	60	40	154
40	11	53	53	77	44.5	188

∗ The bracket is shipped together with the product.

With Air Cushion [mm]

Bore size	WA
20	12
25	12
32	11
40	16

Female Rod End [mm]

Bore size	A_1	H	MM	ZZ
20	8	20	M4 x 0.7	102
25	8	20	M5 x 0.8	102
32	12	20	M6 x 1	104
40	13	21	M8 x 1.25	130

∗ When a female thread is used, use a thin wrench when tightening the piston rod.
∗ When a female thread is used, depending on the material of the workpiece, use a washer etc., to prevent the contact part at the rod end from being deformed.

Rod Boot Mounting Dimensions

Double rod type

With rod boot (One side)

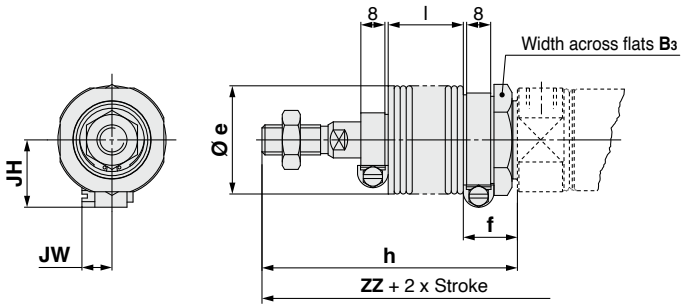

With rod boot (Both sides)

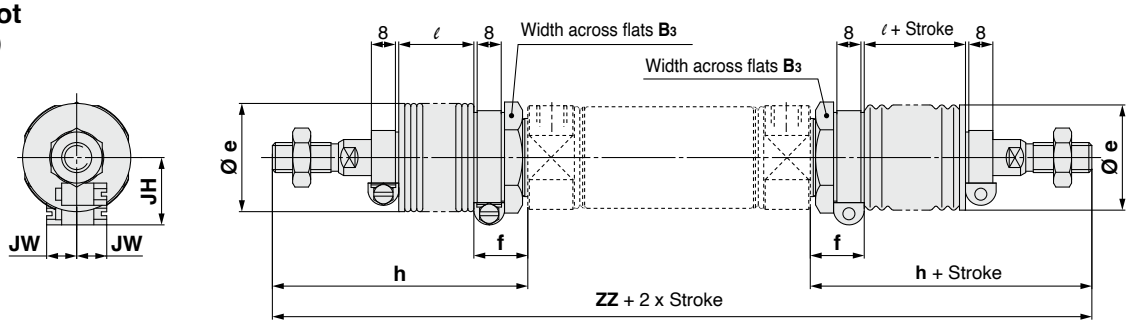

[mm]

Symbol / Bore size / Stroke	B3	e	f	h							ℓ						
				1 to 50	51 to 100	101 to 150	151 to 200	201 to 300	301 to 400	401 to 500	1 to 50	51 to 100	101 to 150	151 to 200	201 to 300	301 to 400	401 to 500
20	30	36	18	68	81	93	106	131	156	181	12.5	25	37.5	50	75	100	125
25	32	36	18	72	85	97	110	135	160	185	12.5	25	37.5	50	75	100	125
32	32	36	18	72	85	97	110	135	160	185	12.5	25	37.5	50	75	100	125
40	41	46	20	77	90	102	115	140	165	190	12.5	25	37.5	50	75	100	125

[mm]

Symbol / Bore size / Stroke	ZZ (One side)							ZZ (Both sides)							JH	JW
	1 to 50	51 to 100	101 to 150	151 to 200	201 to 300	301 to 400	401 to 500	1 to 50	51 to 100	101 to 150	151 to 200	201 to 300	301 to 400	401 to 500		
20	171	184	196	209	234	259	284	198	224	248	274	324	374	424	23.5	10.5
25	179	192	204	217	242	267	292	206	232	256	282	332	382	432	23.5	10.5
32	181	194	206	219	244	269	294	208	234	258	284	334	384	434	23.5	10.5
40	215	228	240	253	278	303	328	242	268	292	318	368	418	468	27	10.5

Air Cylinder: Standard Type
Single Acting, Spring Return/Extend
CM2 Series
Ø 20, Ø 25, Ø 32, Ø 40

RoHS

How to Order

Mounting

B	Basic (Double-side bossed)
L	Axial foot
F	Rod flange
G	Head flange
C	Single clevis
D	Double clevis
U	Rod trunnion

T	Head trunnion
E	Integrated clevis
V	Integrated clevis (90°)
BZ	Boss-cut/Basic
FZ	Boss-cut/ Rod flange
UZ	Boss-cut/ Rod trunnion

Cylinder stroke [mm]
Refer to page 33 for standard strokes.

Action

S	Single acting, Spring return
T	Single acting, Spring extend

Rod end thread

—	Male rod end
F	Female rod end

Pivot bracket

—	No bracket
N	Pivot bracket

∗ **Only for C, T, U, E, V, and UZ mounting types**
∗ The pivot bracket is shipped together with the product but does not come assembled.

Made to order
Refer to page 33 for details.

CM2 B 32 □ – 150 S □ Z1 – □ □ – □

With auto switch CDM2 B 32 □ – 150 S □ Z1 – □ □ – M9BW □ – □

With auto switch
(Built-in magnet)

Bore size

20	20 mm
25	25 mm
32	32 mm
40	40 mm

Port thread type

—	Rc
TN	NPT
TF	G

Rod end bracket

—	No bracket
V	Single knuckle joint
W	Double knuckle joint
Q	Rod end

∗ No bracket is provided for the female rod end.
∗ A knuckle joint pin is not provided with the single knuckle joint.
∗ The rod end bracket is shipped together with the product but does not come assembled.

Auto switch

—	Without auto switch

∗ For applicable auto switches, refer to the table below.

Number of auto switches

—	2
S	1
n	n

∗ **Refer to page 33 for the ordering example of cylinder assembly.**

Applicable Auto Switches/Refer to the **Catalogue on www.smc.eu** for further information on auto switches.

Type	Special function	Electrical entry	Indicator light	Wiring (Output)	Load voltage DC		Load voltage AC	Auto switch model Perpendicular	Auto switch model In-line	Lead wire length [m] 0.5 (–)	1 (M)	3 (L)	5 (Z)	Pre-wired connector	Applicable load	
Solid state auto switch	———	Grommet	Yes	3-wire (NPN)	24 V	5 V, 12 V	—	M9NV	M9N	●	●	●	○	○	IC circuit	Relay, PLC
				3-wire (PNP)				M9PV	M9P	●	●	●	○	○		
				2-wire		12 V		M9BV	M9B	●	●	●	○	○	—	
	Diagnostic indication (2-colour indicator)	Grommet		3-wire (NPN)		5 V, 12 V		M9NWV	M9NW	●	●	●	○	○	IC circuit	
				3-wire (PNP)				M9PWV	M9PW	●	●	●	○	○		
				2-wire		12 V		M9BWV	M9BW	●	●	●	○	○	—	
	Water resistant (2-colour indicator)			3-wire (NPN)		5 V, 12 V		M9NAV∗1	M9NA∗1	○	○	●	○	○	IC circuit	
				3-wire (PNP)				M9PAV∗1	M9PA∗1	○	○	●	○	○		
				2-wire		12 V		M9BAV∗1	M9BA∗1	○	○	●	○	○	—	
Reed auto switch	———	Grommet	Yes	3-wire (NPN equivalent)	—	5 V	—	A96V	A96	●	●	●	●	○	IC circuit	—
			No	2-wire	24 V	12 V	100 V	A93V	A93	●	●	●	●	○∗2	—	Relay, PLC
							100 V or less	A90V	A90	●	●	●	●	○∗2	IC circuit	

∗1 Water-resistant type auto switches can be mounted on the above models, but SMC cannot guarantee water resistance.
∗2 The load voltage used is 24 VDC.

∗ Lead wire length symbols: 0.5 m ····· — (Example) M9NW
1 m ····· M (Example) M9NWM
3 m ····· L (Example) M9NWL
5 m ····· Z (Example) M9NWZ

∗ Auto switches marked with a "○" are produced upon receipt of order.

∗ Since there are applicable auto switches other than those listed above, refer to page 64 for details.
∗ For details on auto switches with pre-wired connectors, refer to the **Catalogue on www.smc.eu**.
∗ The D-A9□□/M9□□□ auto switches are shipped together with the product but do not come assembled. (Only the auto switch mounting brackets are assembled before shipment.)

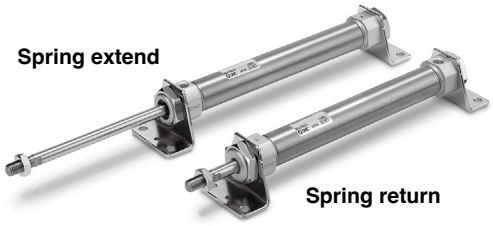

Specifications

Bore size [mm]		20	25	32	40
Action		Single acting, Spring return/Single acting, Spring extend			
Type		Pneumatic			
Cushion		Rubber bumper			
Fluid		Air			
Proof pressure		1.5 MPa			
Max. operating pressure		1.0 MPa			
Mini. operating pressure	Single acting, Spring return	0.18 MPa			
	Single acting, Spring extend	0.23 MPa			
Ambient and fluid temperatures		Without auto switch: –10 °C to 70 °C With auto switch: –10 °C to 60 °C (No freezing)			
Lubrication		Not required (Non-lube)			
Stroke length tolerance		$^{+1.4}_{0}$ mm			
Piston speed		50 to 750 mm/s			
Allowable kinetic energy	**Male thread**	0.27 J	0.4 J	0.65 J	1.2 J
	Female thread	0.11 J	0.18 J	0.29 J	0.52 J

Standard Strokes

Bore size [mm]	Standard stroke [mm] ∗1
20	25, 50, 75, 100, 125, 150
25	25, 50, 75, 100, 125, 150
32	25, 50, 75, 100, 125, 150, 200
40	25, 50, 75, 100, 125, 150, 200, 250

∗1 Intermediate strokes not listed above are produced upon receipt of order. The manufacturing of intermediate strokes in 1 mm increments is possible. (Spacers are not used.)
∗ Applicable strokes should be confirmed according to the usage. For details, refer to the "Air Cylinders Model Selection" in the **catalogue on www.smc.eu**. In addition, the products that exceed the standard stroke might not be able to fulfill the specifications due to deflection, etc.
∗ The min. stroke of the type with a magnet varies depending on the switch. For details, refer to pages 62 and 66.

Symbol

Single acting, Spring return, Rubber bumper

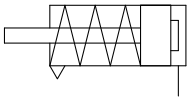

Single acting, Spring extend, Rubber bumper

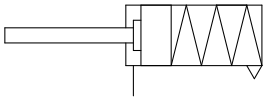

Made to Order Common Specifications
(For details, refer to pages 67 to 74.)

Symbol	Specifications
-XC29	Double knuckle joint with spring pin
-XC52	Mounting nut with set screw

Refer to pages 61 to 66 for cylinders with auto switches.

- Auto Switch Proper Mounting Position (Detection at stroke end) and Mounting Height
- Minimum Stroke for Auto Switch Mounting
- Operating Range
- Auto Switch Mounting Brackets/Part Nos.

Mounting Bracket

For the mounting bracket part numbers other than basic type, refer to page 34.

∗ Stainless steel mounting brackets and accessories are also available.
Refer to page 22 for details.

Spring Reaction Force

Refer to the **catalogue on www.smc.eu** (Table (3): Spring Reaction Force).

Theoretical Output

Refer to the **catalogue on www.smc.eu** (Theoretical Output 1).

Accessories

Refer to pages 20 and 23 for accessories, since it is the same as standard type, double acting, single rod.

Option: Ordering Example of Cylinder Assembly

Cylinder model: CDM2C32-150SZ1-NV-M9BW

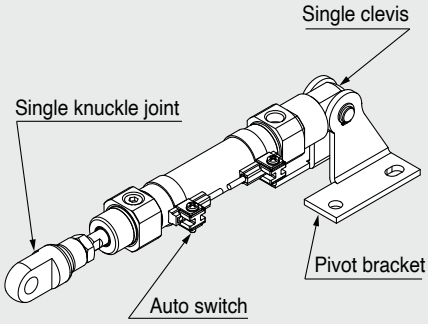

Mounting C: Single clevis
Pivot bracket N: Yes
Rod end bracket V: Single knuckle joint
Auto switch D-M9BW: 2 pcs.

∗ Pivot bracket, single knuckle joint and auto switch are shipped together with the product but do not come assembled.

∗ Pivot bracket is only available for C, T, U, E, V, and UZ mounting types.
∗ No bracket is provided for the female rod end.

Mounting and Accessories

Mounting \ Accessories		Body	Standard (mounted to the body)					Standard (packaged together but does not come assembled)										Option		
			Mounting nut	Rod end nut (Male thread) *1	Single clevis	Double clevis	Liner *7	Mounting nut	Foot	Flange	Pivot bracket	Pivot bracket pin *5	Double clevis pin *5	Trunnion	Mounting nut (For trunnion)	Clevis pivot bracket (CM2E/CM2V)	Clevis pivot bracket pin (CM2E/CM2V) *5	Single knuckle joint	Double knuckle joint *6	Rod end
B	Basic (Double-side bossed)	●(1 pc.)	●(1 pc.)	●(1 pc.)	—	—	—	—	—	—	—	—	—	—	—	—	—	●	●	●
L	Axial foot	●(1 pc.)	●(1 pc.)*2	●(1 pc.)	—	—	—	●(1 pc.)*2	●(2 pcs.)	—	—	—	—	—	—	—	—	●	●	●
F	Rod flange	●(1 pc.)	●(1 pc.)	●(1 pc.)	—	—	—	—	—	●(1 pc.)	—	—	—	—	—	—	—	●	●	●
G	Head flange	●(1 pc.)	●(1 pc.)	●(1 pc.)	—	—	—	—	—	●(1 pc.)	—	—	—	—	—	—	—	●	●	●
C	Single clevis	●(1 pc.)	— *3	●(1 pc.)	●(1 pc.)	—	●(Max. 3 pcs.)	— *3	—	—	—	—	—	—	—	—	—	●	●	●
D	Double clevis	●(1 pc.)	— *3	●(1 pc.)	—	●(1 pc.)	●(Max. 3 pcs.)	— *3	—	—	—	—	●(1 pc.)	—	—	—	—	●	●	●
U	Rod trunnion	●(1 pc.)	— *4	●(1 pc.)	—	—	—	—	—	—	—	—	—	●(1 pc.)	●(1 pc.)	—	—	●	●	●
T	Head trunnion	●(1 pc.)	— *4	●(1 pc.)	—	—	—	—	—	—	—	—	—	●(1 pc.)	●(1 pc.)	—	—	●	●	●
E	Integrated clevis	●(1 pc.)	— *3	●(1 pc.)	—	—	—	— *3	—	—	—	—	—	—	—	—	—	●	●	●
V	Integrated clevis (90°)	●(1 pc.)	— *3	●(1 pc.)	—	—	—	— *3	—	—	—	—	—	—	—	—	—	●	●	●
BZ	Boss-cut/Basic	●(1 pc.)	●(1 pc.)	●(1 pc.)	—	—	—	—	—	—	—	—	—	—	—	—	—	●	●	●
FZ	Boss-cut/ Rod flange	●(1 pc.)	●(1 pc.)	●(1 pc.)	—	—	—	—	—	●(1 pc.)	—	—	—	—	—	—	—	●	●	●
UZ	Boss-cut/ Rod trunnion	●(1 pc.)	— *4	●(1 pc.)	—	—	—	—	—	—	—	—	—	●(1 pc.)	●(1 pc.)	—	—	●	●	●

*1 Rod end nut is not provided for the female rod end.
*2 Two mounting nuts are packaged together.
*3 Mounting nut is not packaged for the clevis.
*4 Trunnion nut is packaged for U, T, and UZ.
*5 Retaining rings are included.
*6 A pin and retaining rings (split pins for Ø 40) are included.
*7 This is the part(s) used to adjust the clevis angle. Mounting quantity can vary.

Mounting Brackets/Part Nos.

Mounting bracket	Min. order quantity	Bore size [mm]				Contents (for min. order quantity)
		20	25	32	40	
Foot*1	2	CM-L020B	CM-L032B		CM-L040B	2 foot brackets, 1 mounting nut
Foot*2	1	CMZ1-L020B	CMZ1-L032B		CMZ1-L040B	1 foot bracket
Flange	1	CM-F020B	CM-F032B		CM-F040B	1 flange
Single clevis*3	1	CM-C020B	CM-C032B		CM-C040B	1 single clevis, 3 liners
Double clevis (with pin)*3, *4	1	CM-D020B	CM-D032B		CM-D040B	1 double clevis, 3 liners, 1 clevis pin, 2 retaining rings
Double clevis pin	1	CDP-1			CDP-2	1 clevis pin, 2 retaining rings (split pins)
Trunnion (with nut)	1	CM-T020B	CM-T032B		CM-T040B	1 trunnion, 1 trunnion nut
Rod end nut	1	NT-02	NT-03		NT-04	1 rod end nut
Mounting nut	1	SN-020B	SN-032B		SN-040B	1 mounting nut
Trunnion nut	1	TN-020B	TN-032B		TN-040B	1 trunnion nut
Single knuckle joint	1	I-020B	I-032B		I-040B	1 single knuckle joint
Double knuckle joint	1	Y-020B	Y-032B		Y-040B	1 double knuckle joint, 1 knuckle pin, 2 retaining rings
Rod end	1	KJ8D	KJ10D		KJ14D	1 rod end
Double knuckle joint pin	1	CDP-1			CDP-3	1 knuckle pin, 2 retaining rings (split pins)
Clevis pivot bracket pin (For CM2E/CM2V)	1	CD-S02		CD-S03		1 clevis pin, 2 retaining rings
Clevis pivot bracket (For CM2E/CM2V)	1	CM-E020B		CM-E032B		1 clevis pivot bracket, 1 clevis pin, 2 retaining rings
Pivot bracket (For CM2C)	1	CM-B032			CM-B040	2 pivot brackets (1 of each type)
Pivot bracket pin (For CM2C)	1	CDP-1			CD-S03	1 pin, 2 retaining rings
Pivot bracket (For CM2T/CM2U)	1	CM-B020	CM-B032		CM-B040	2 pivot brackets (1 of each type)

*1 Order two foot brackets per cylinder.
*2 A single foot is available.
*3 3 liners are included with a clevis bracket for adjusting the mounting angle.
*4 A clevis pin and retaining rings (split pins for Ø 40) are included.

For dimensions of accessories (options), refer to pages 20 to 23.

Mounting Brackets, Accessories/Material, Surface Treatment

Segment	Description	Material	Surface treatment
Mounting brackets	Foot	Carbon steel	Nickel plating
	Flange	Carbon steel	Nickel plating
	Single clevis	Carbon steel	Electroless nickel plating
	Double clevis	Carbon steel	Electroless nickel plating
	Trunnion	Cast iron	Electroless nickel plating
Accessories	Rod end nut	Carbon steel	Zinc chromating
	Mounting nut	Carbon steel	Nickel plating
	Trunnion nut	Carbon steel	Nickel plating
	Clevis pivot bracket	Carbon steel	Nickel plating
	Clevis pivot bracket pin	Carbon steel	(None)
	Single knuckle joint	Carbon steel Ø 40: Free-cutting steel	Electroless nickel plating
	Double knuckle joint	Carbon steel Ø 40: Cast iron	Electroless nickel plating Metallic silver colour painting for Ø 40
	Rod end	Carbon steel	Zinc plating
	Double clevis pin	Carbon steel	(None)
	Double knuckle joint pin	Carbon steel	(None)
	Pivot bracket	Carbon steel	Nickel plating
	Pivot bracket pin	Carbon steel	(None)

Weight

Spring Return

[kg]

Bore size [mm]		20	25	32	40
Basic weight	25 mm stroke	0.20	0.30	0.42	0.77
	50 mm stroke	0.22	0.33	0.46	0.84
	75 mm stroke	0.27	0.42	0.58	1.03
	100 mm stroke	0.29	0.45	0.63	1.09
	125 mm stroke	0.35	0.54	0.76	1.29
	150 mm stroke	0.37	0.57	0.80	1.36
	200 mm stroke	—	—	0.97	1.61
	250 mm stroke	—	—	—	1.87
Mounting bracket weight	Foot	0.15	0.16	0.16	0.27
	Flange	0.06	0.09	0.09	0.12
	Single clevis	0.04	0.04	0.04	0.09
	Double clevis	0.05	0.06	0.06	0.13
	Trunnion	0.04	0.07	0.07	0.10
	Integrated clevis	–0.02	–0.02	–0.01	–0.04
	Boss-cut/Basic	–0.01	–0.02	–0.02	–0.03
	Boss-cut/Flange	0.05	0.07	0.07	0.09
	Boss-cut/Trunnion	0.03	0.05	0.05	0.07
	Clevis pivot bracket (with pin)	0.07	0.07	0.14	0.14
Weight reduction for female rod end		–0.01	–0.02	–0.02	–0.04
Option bracket	Single knuckle joint	0.06	0.06	0.06	0.23
	Double knuckle joint (with pin)	0.07	0.07	0.07	0.20
	Rod end	0.05	0.07	0.07	0.16

Calculation:
(Example) **CM2L32-100SZ1** (Bore size Ø 32, Foot, 100 mm stroke)
0.63 (Basic weight) + 0.16 (Mounting bracket weight) = **0.79 kg**

Spring Extend

[kg]

Bore size [mm]		20	25	32	40
Basic weight	25 mm stroke	0.19	0.29	0.40	0.74
	50 mm stroke	0.21	0.32	0.44	0.81
	75 mm stroke	0.25	0.39	0.54	0.97
	100 mm stroke	0.27	0.42	0.58	1.03
	125 mm stroke	0.32	0.49	0.69	1.20
	150 mm stroke	0.34	0.52	0.73	1.27
	200 mm stroke	—	—	0.88	1.49
	250 mm stroke	—	—	—	1.72
Mounting bracket weight	Foot	0.15	0.16	0.16	0.27
	Flange	0.06	0.09	0.09	0.12
	Single clevis	0.04	0.04	0.04	0.09
	Double clevis	0.05	0.06	0.06	0.13
	Trunnion	0.04	0.07	0.07	0.10
	Integrated clevis	–0.02	–0.02	–0.01	–0.04
	Boss-cut/Basic	–0.01	–0.02	–0.02	–0.03
	Boss-cut/Flange	0.05	0.07	0.07	0.09
	Boss-cut/Trunnion	0.03	0.05	0.05	0.07
	Clevis pivot bracket (with pin)	0.07	0.07	0.14	0.14
Weight reduction for female rod end		–0.01	–0.02	–0.02	–0.04
Option bracket	Single knuckle joint	0.06	0.06	0.06	0.23
	Double knuckle joint (with pin)	0.07	0.07	0.07	0.20
	Rod end	0.05	0.07	0.07	0.16

Construction

Spring return

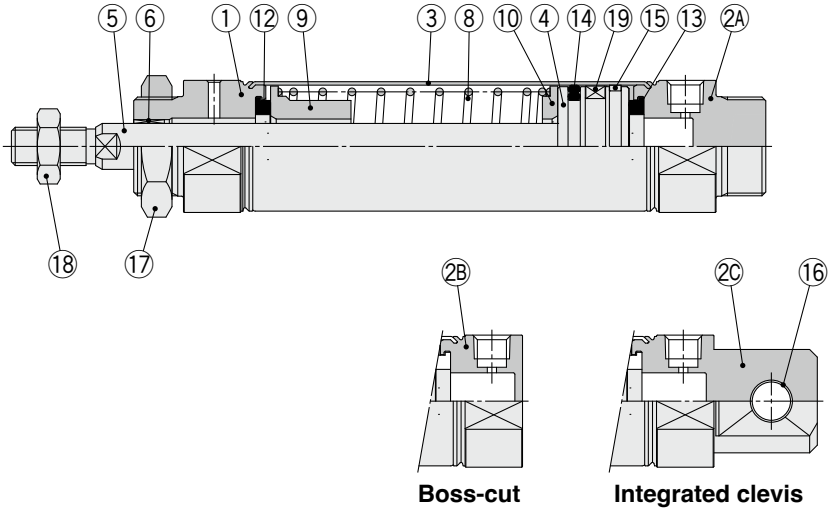

Spring extend

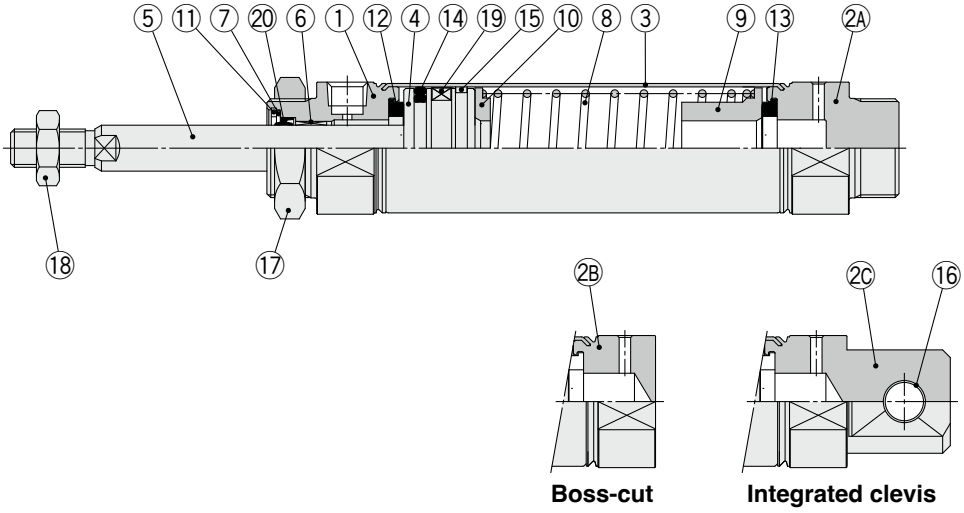

Component Parts

No.	Description	Material	Note
1	**Rod cover**	Aluminium alloy	Anodised
2A	**Head cover A**	Aluminium alloy	Anodised
2B	**Head cover B**	Aluminium alloy	Anodised
2C	**Head cover C**	Aluminium alloy	Anodised
3	**Cylinder tube**	Stainless steel	
4	**Piston**	Aluminium alloy	
5	**Piston rod**	Carbon steel	Hard chrome plating
6	**Bushing**	Bearing alloy	
7	**Seal retainer**	Stainless steel	
8	**Return spring**	Steel wire	Zinc chromating
9	**Spring guide**	Aluminium alloy	Chromating
10	**Spring seat**	Aluminium alloy	Chromating
11	**Retaining ring**	Carbon steel	Phosphate coating

No.	Description	Material	Note
12	**Bumper**	Resin	Ø 25 or larger is common.
13	**Bumper**	Resin	
14	**Piston seal**	NBR	
15	**Wear ring**	Resin	
16	**Clevis bushing**	Bearing alloy	
17	**Mounting nut**	Carbon steel	Nickel plating
18	**Rod end nut**	Carbon steel	Zinc chromating
19	**Magnet**	—	CDM2□20 to 40-□$^{S}_{T}$Z1
20	**Rod seal**	NBR	

Replacement Parts: Seal

● **With Rubber Bumper (Spring extend only)**

No.	Description	Material	Part no.			
			20	**25**	**32**	**40**
20	**Rod seal**	NBR	CM20Z-PS	CM25Z-PS	CM32Z-PS	CM40Z-PS

∗ Since the seal does not include a grease pack, order it separately.
Grease pack part number: GR-S-010 (10 g)

Basic (Double-side Bossed) (B)

CM2B Bore size – Stroke S/T Z1

Spring return

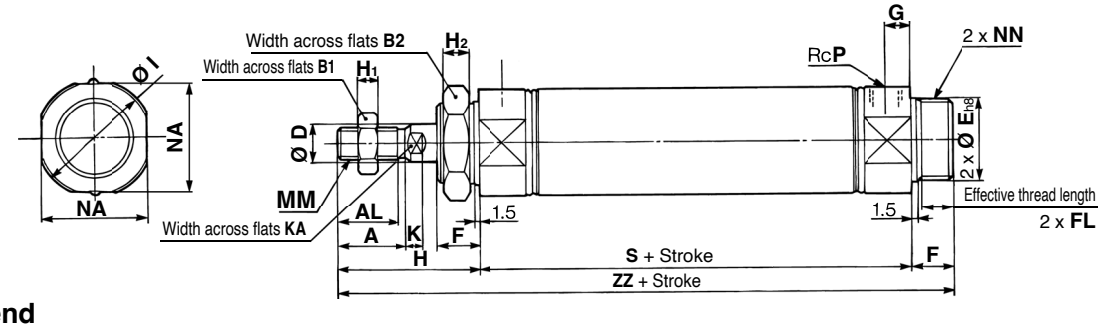

Spring extend

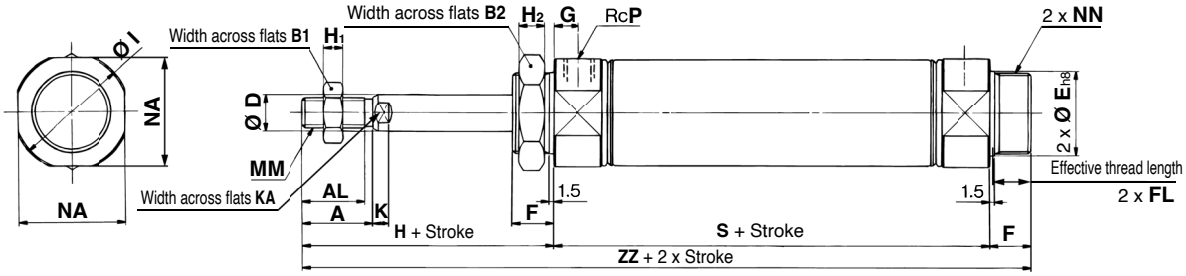

Boss-cut

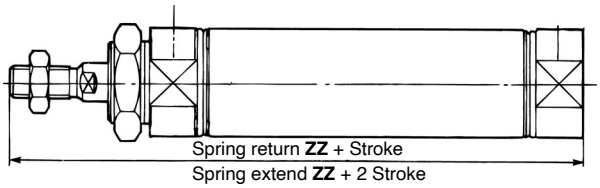

Female rod end

Spring return

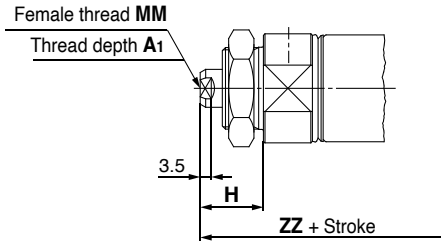

Spring extend

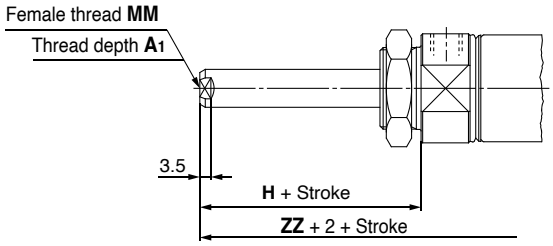

[mm]

Bore size	A	AL	B_1	B_2	D	E	F	FL	G	H	H_1	H_2	I	K	KA	MM	NA	NN	P
20	18	15.5	13	26	8	$20^{0}_{-0.033}$	13	10.5	8	41	5	8	28	5	6	M8 x 1.25	24	M20 x 1.5	1/8
25	22	19.5	17	32	10	$26^{0}_{-0.033}$	13	10.5	8	45	6	8	33.5	5.5	8	M10 x 1.25	30	M26 x 1.5	1/8
32	22	19.5	17	32	12	$26^{0}_{-0.033}$	13	10.5	8	45	6	8	37.5	5.5	10	M10 x 1.25	34.5	M26 x 1.5	1/8
40	24	21	22	41	14	$32^{0}_{-0.039}$	16	13.5	11	50	8	10	46.5	7	12	M14 x 1.5	42.5	M32 x 2	1/4

Dimensions by Stroke

[mm]

Bore size \ Stroke / Symbol	5 to 50		51 to 100		101 to 150		151 to 200		201 to 250	
	S	**ZZ**	**S**	**ZZ**	**S**	**ZZ**	**S**	**ZZ**	**S**	**ZZ**
20	87	141	112	166	137	191	—	—	—	—
25	87	145	112	170	137	195	—	—	—	—
32	89	147	114	172	139	197	164	222	—	—
40	113	179	138	204	163	229	188	254	213	279

Boss-cut

[mm]

Bore size \ Stroke / Symbol	5 to 50	51 to 100	101 to 150	151 to 200	201 to 250
	ZZ	**ZZ**	**ZZ**	**ZZ**	**ZZ**
20	128	153	178	—	—
25	132	157	182	—	—
32	134	159	184	209	—
40	163	188	213	238	263

Female Rod End

[mm]

Bore size \ Stroke / Symbol	A_1	H	MM	5 to 50		51 to 100		101 to 150		151 to 200		201 to 250	
				S	**ZZ**	**S**	**ZZ**	**S**	**ZZ**	**S**	**ZZ**	**S**	**ZZ**
20	8	20	M4 x 0.7	87	120	112	145	137	170	—	—	—	—
25	8	20	M5 x 0.8	87	120	112	145	137	170	—	—	—	—
32	12	20	M6 x 1	89	122	114	147	139	172	164	197	—	—
40	13	21	M8 x 1.25	113	150	138	175	163	200	188	225	213	250

* When a female thread is used, use a thin wrench when tightening the piston rod.
* When a female thread is used, depending on the material of the workpiece, use a washer etc., to prevent the contact part at the rod end from being deformed.

Axial Foot (L)

CM2L Bore size – Stroke $^{S}_{T}$ **Z1**

Spring return

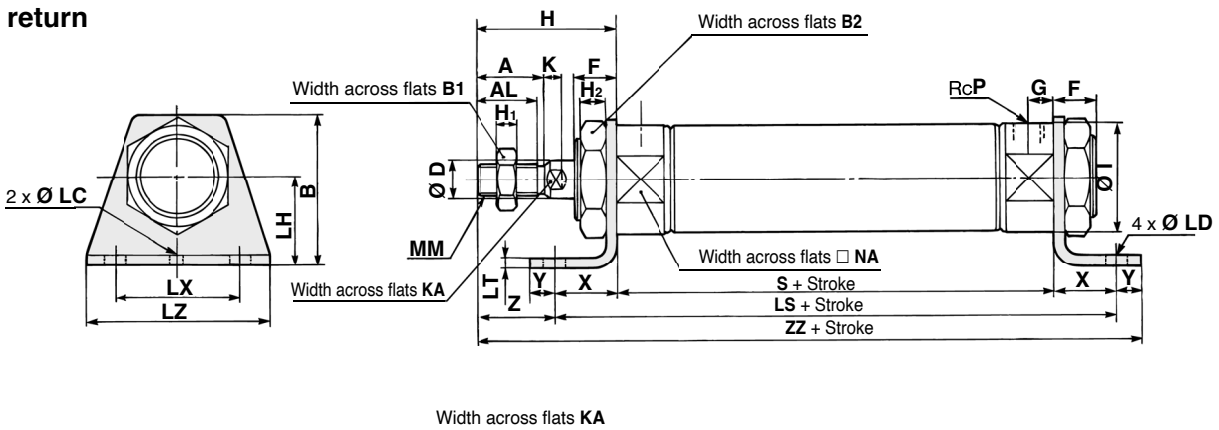

Spring extend

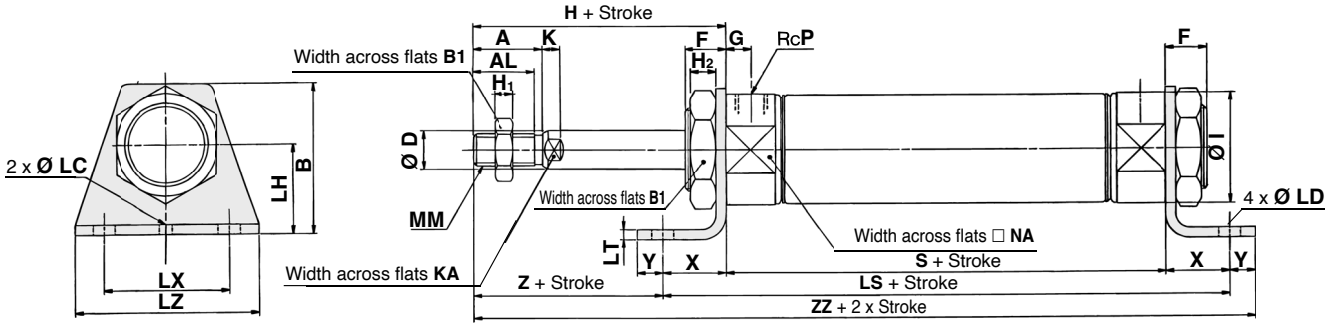

[mm]

Bore size	A	AL	B	B_1	B_2	D	F	G	H	H_1	H_2	I	K	KA	LC	LD	LH	LT	LX	LZ	MM	NA	P	X	Y	Z
20	18	15.5	40	13	26	8	13	8	41	5	8	28	5	6	4	6.8	25	3.2	40	55	M8 x 1.25	24	1/8	20	8	21
25	22	19.5	47	17	32	10	13	8	45	6	8	33.5	5.5	8	4	6.8	28	3.2	40	55	M10 x 1.25	30	1/8	20	8	25
32	22	19.5	47	17	32	12	13	8	45	6	8	37.5	5.5	10	4	6.8	28	3.2	40	55	M10 x 1.25	34.5	1/8	20	8	25
40	24	21	54	22	41	14	16	11	50	8	10	46.5	7	12	4	7	30	3.2	55	75	M14 x 1.5	42.5	1/4	23	10	27

Dimensions by Stroke

[mm]

Bore size \ Stroke / Symbol	5 to 50			51 to 100			101 to 150			151 to 200			201 to 250		
	LS	**S**	**ZZ**	**LS**	**S**	**ZZ**	**LS**	**S**	**ZZ**	**LS**	**S**	**ZZ**	**LS**	**S**	**ZZ**
20	127	87	156	152	112	181	177	137	206	—	—	—	—	—	—
25	127	87	160	152	112	185	177	137	210	—	—	—	—	—	—
32	129	89	162	154	114	187	179	139	212	204	164	237	—	—	—
40	159	113	196	184	138	221	209	163	246	234	188	271	259	213	296

∗ The bracket is shipped together with the product.
∗ Refer to page 37 for female thread dimensions.

Rod Flange (F)

CM2F Bore size – Stroke S/T Z1

Spring return

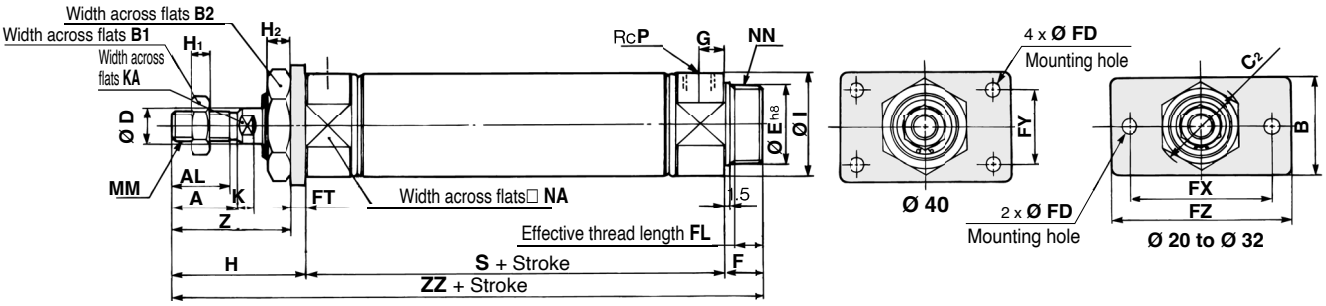

Spring extend

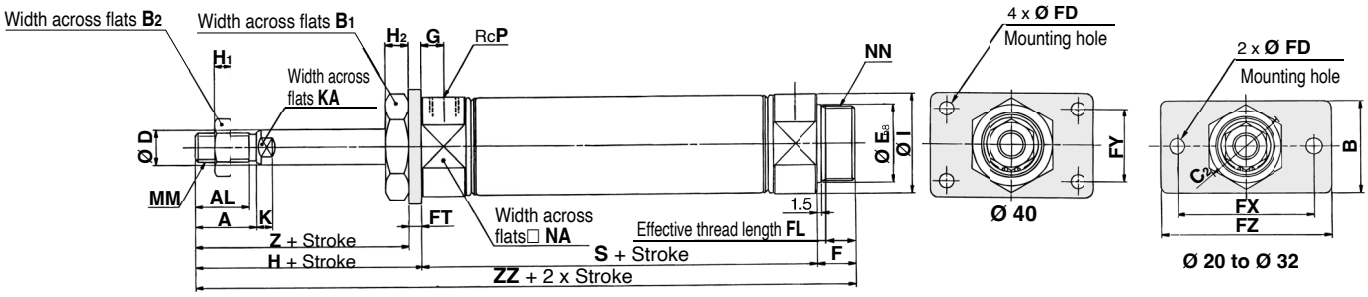

Boss-cut

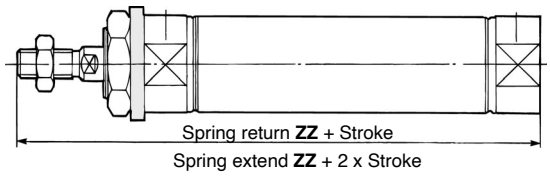

[mm]

Bore size	A	AL	B	B_1	B_2	C_2	D	E	F	FD	FL	FT	FX	FY	FZ	G	H	H_1	H_2	I	K	KA	MM	NA	NN	P	Z
20	18	15.5	34	13	26	30	8	$20^{0}_{-0.033}$	13	7	10.5	4	60	—	75	8	41	5	8	28	5	6	M8 x 1.25	24	M20 x 1.5	1/8	37
25	22	19.5	40	17	32	37	10	$26^{0}_{-0.033}$	13	7	10.5	4	60	—	75	8	45	6	8	33.5	5.5	8	M10 x 1.25	30	M26 x 1.5	1/8	41
32	22	19.5	40	17	32	37	12	$26^{0}_{-0.033}$	13	7	10.5	4	60	—	75	8	45	6	8	37.5	5.5	10	M10 x 1.25	34.5	M26 x 1.5	1/8	41
40	24	21	52	22	41	47.3	14	$32^{0}_{-0.039}$	16	7	13.5	5	66	36	82	11	50	8	10	46.5	7	12	M14 x 1.5	42.5	M32 x 2	1/4	45

Dimensions by Stroke

[mm]

Bore size \ Stroke / Symbol	5 to 50		51 to 100		101 to 150		151 to 200		201 to 250	
	S	ZZ	S	ZZ	S	ZZ	S	ZZ	S	ZZ
20	87	141	112	166	137	191	—	—	—	—
25	87	145	112	170	137	195	—	—	—	—
32	89	147	114	172	139	197	164	222	—	—
40	113	179	138	204	163	229	188	254	213	279

Boss-cut

[mm]

Bore size \ Stroke / Symbol	5 to 50	51 to 100	101 to 150	151 to 200	201 to 250
	ZZ	ZZ	ZZ	ZZ	ZZ
20	128	153	178	—	—
25	132	157	182	—	—
32	134	159	184	209	—
40	163	188	213	238	263

∗ The bracket is shipped together with the product.
∗ Refer to page 37 for female thread dimensions.

Head Flange (G)

CM2G Bore size – Stroke S/T Z1

Spring return

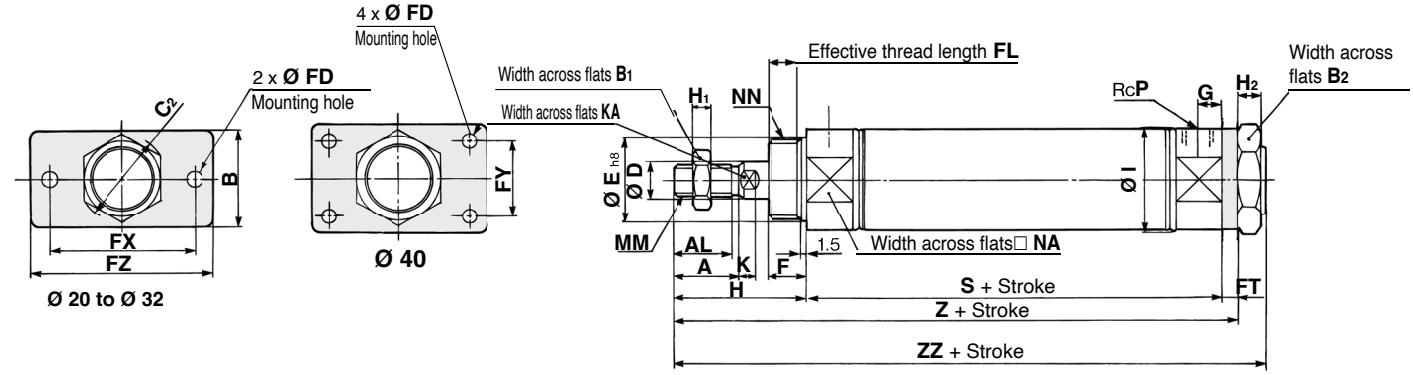

Spring extend

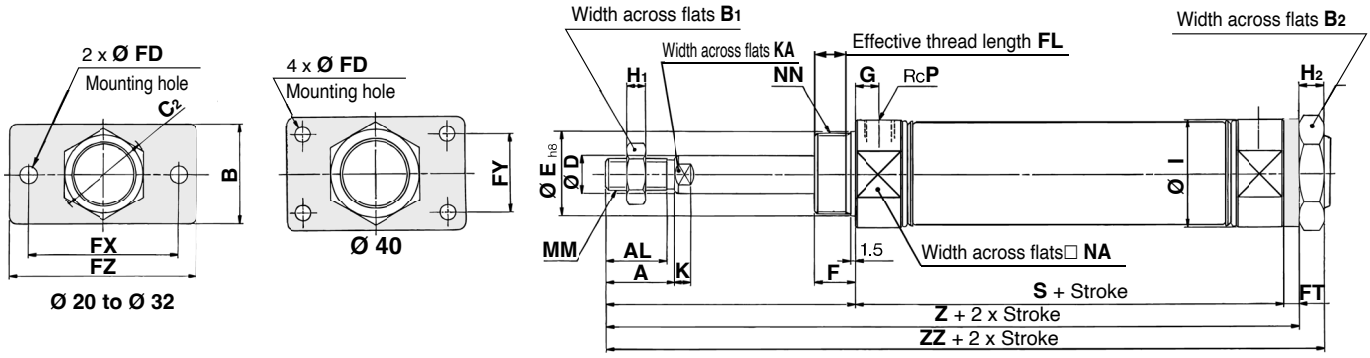

[mm]

Bore size	A	AL	B	B_1	B_2	C_2	D	E	F	FD	FL	FT	FX	FY	FZ	G	H	H_1	H_2	I	K	KA	MM	NA	NN	P
20	18	15.5	34	13	26	30	8	$20^{0}_{-0.033}$	13	7	10.5	4	60	—	75	8	41	5	8	28	5	6	M8 x 1.25	24	M20 x 1.5	1/8
25	22	19.5	40	17	32	37	10	$26^{0}_{-0.033}$	13	7	10.5	4	60	—	75	8	45	6	8	33.5	5.5	8	M10 x 1.25	30	M26 x 1.5	1/8
32	22	19.5	40	17	32	37	12	$26^{0}_{-0.033}$	13	7	10.5	4	60	—	75	8	45	6	8	37.5	5.5	10	M10 x 1.25	34.5	M26 x 1.5	1/8
40	24	21	52	22	41	47.3	14	$32^{0}_{-0.039}$	16	7	13.5	5	66	36	82	11	50	8	10	46.5	7	12	M14 x 1.5	42.5	M32 x 2	1/4

Dimensions by Stroke

[mm]

Bore size \ Stroke / Symbol	5 to 50			51 to 100			101 to 150			151 to 200			201 to 250		
	S	Z	ZZ	S	Z	ZZ	S	Z	ZZ	S	Z	ZZ	S	Z	ZZ
20	87	132	141	112	157	166	137	182	191	—	—	—	—	—	—
25	87	136	145	112	161	170	137	186	195	—	—	—	—	—	—
32	89	138	147	114	163	172	139	188	197	164	213	222	—	—	—
40	113	168	179	138	193	204	163	218	229	188	243	254	213	268	279

∗ The bracket is shipped together with the product.
∗ Refer to page 37 for female thread dimensions.

Single Clevis (C)

CM2C Bore size – Stroke S/T Z1

Spring return

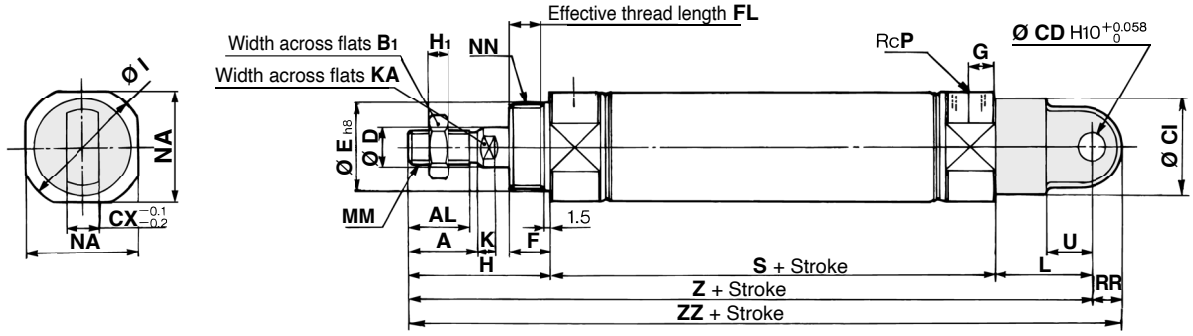

Spring extend

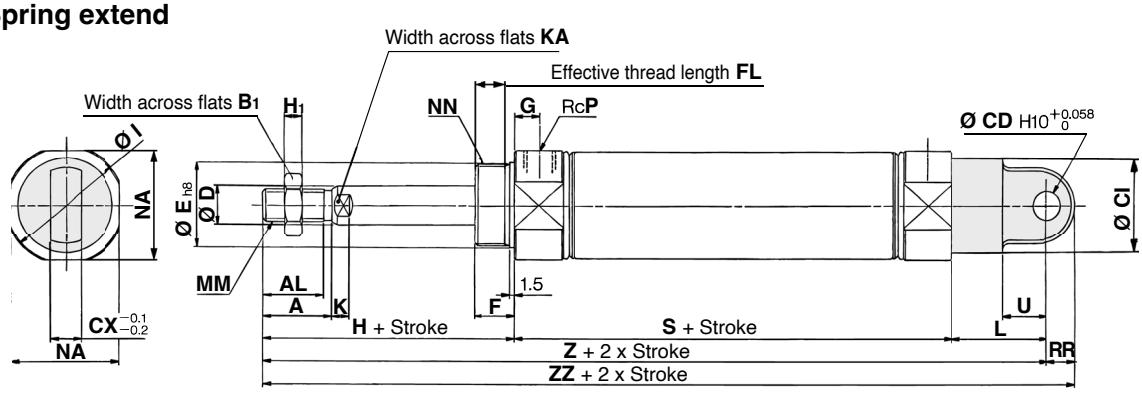

[mm]

Bore size	A	AL	B1	CD	CI	CX	D	E	F	FL	G	H	H1	I	K	KA	L	MM	NA	NN	P	RR	U
20	18	15.5	13	9	24	10	8	$20^{0}_{-0.033}$	13	10.5	8	41	5	28	5	6	30	M8 x 1.25	24	M20 x 1.5	1/8	9	14
25	22	19.5	17	9	30	10	10	$26^{0}_{-0.033}$	13	10.5	8	45	6	33.5	5.5	8	30	M10 x 1.25	30	M26 x 1.5	1/8	9	14
32	22	19.5	17	9	30	10	12	$26^{0}_{-0.033}$	13	10.5	8	45	6	37.5	5.5	10	30	M10 x 1.25	34.5	M26 x 1.5	1/8	9	14
40	24	21	22	10	38	15	14	$32^{0}_{-0.039}$	16	13.5	11	50	8	46.5	7	12	39	M14 x 1.5	42.5	M32 x 2	1/4	11	18

Dimensions by Stroke

[mm]

Bore size \ Stroke / Symbol	5 to 50			51 to 100			101 to 150			151 to 200			201 to 250		
	S	**Z**	**ZZ**	**S**	**Z**	**ZZ**	**S**	**Z**	**ZZ**	**S**	**Z**	**ZZ**	**S**	**Z**	**ZZ**
20	87	158	167	112	183	192	137	208	217	–	–	–	–	–	–
25	87	162	171	112	187	196	137	212	221	–	–	–	–	–	–
32	89	164	173	114	189	198	139	214	223	164	239	248	–	–	–
40	113	202	213	138	227	238	163	252	263	188	277	288	213	302	313

∗ Refer to page 37 for female thread dimensions.

Double Clevis (D)

CM2D Bore size – Stroke S/T Z1

Spring return

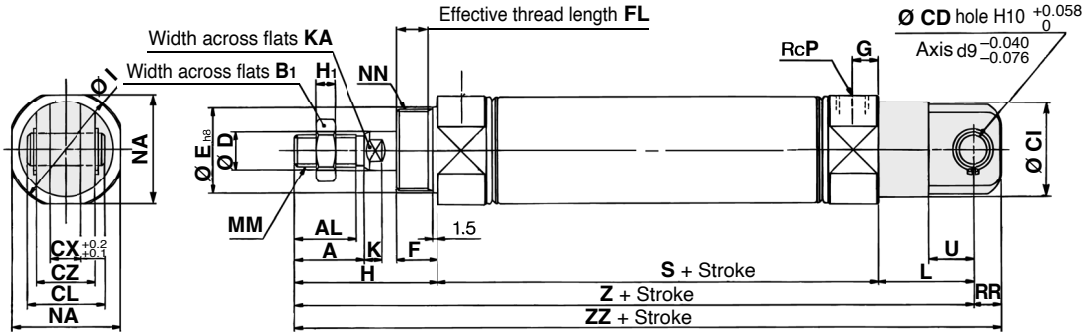

Spring extend

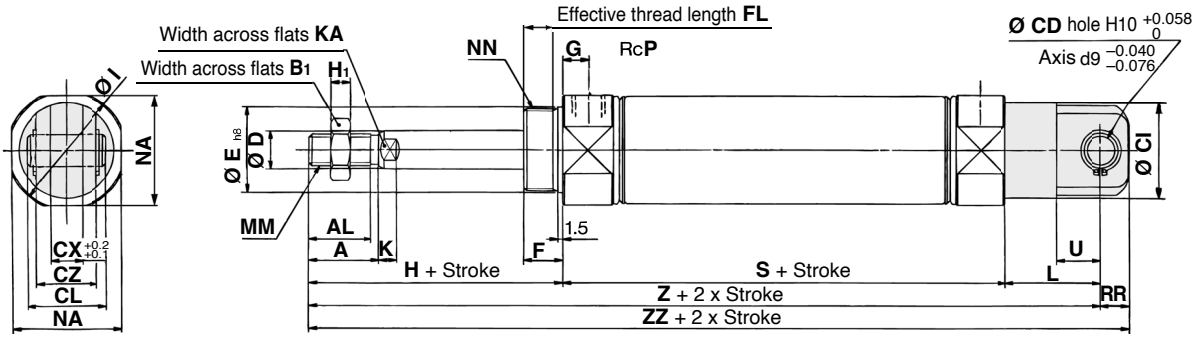

[mm]

Bore size	A	AL	B1	CD	CI	CL	CX	CZ	D	E	F	FL	G	H	H1	I	K	KA	L	MM	NA	NN	P	RR	U
20	18	15.5	13	9	24	25	10	19	8	$20^{0}_{-0.033}$	13	10.5	8	41	5	28	5	6	30	M8 x 1.25	24	M20 x 1.5	1/8	9	14
25	22	19.5	17	9	30	25	10	19	10	$26^{0}_{-0.033}$	13	10.5	8	45	6	33.5	5.5	8	30	M10 x 1.25	30	M26 x 1.5	1/8	9	14
32	22	19.5	17	9	30	25	10	19	12	$26^{0}_{-0.033}$	13	10.5	8	45	6	37.5	5.5	10	30	M10 x 1.25	34.5	M26 x 1.5	1/8	9	14
40	24	21	22	10	38	41.2	15	30	14	$32^{0}_{-0.039}$	16	13.5	11	50	8	46.5	7	12	39	M14 x 1.5	42.5	M32 x 2	1/4	11	18

Dimensions by Stroke

[mm]

Stroke / Symbol / Bore size	5 to 50			51 to 100			101 to 150			151 to 200			201 to 250		
	S	**Z**	**ZZ**	**S**	**Z**	**ZZ**	**S**	**Z**	**ZZ**	**S**	**Z**	**ZZ**	**S**	**Z**	**ZZ**
20	87	158	167	112	183	192	137	208	217	—	—	—	—	—	—
25	87	162	171	112	187	196	137	212	221	—	—	—	—	—	—
32	89	164	173	114	189	198	139	214	223	164	239	248	—	—	—
40	113	202	213	138	227	238	163	252	263	188	277	288	213	302	313

∗ Refer to page 37 for female thread dimensions.

Rod Trunnion (U)

CM2U Bore size – Stroke S/T Z1

Spring return

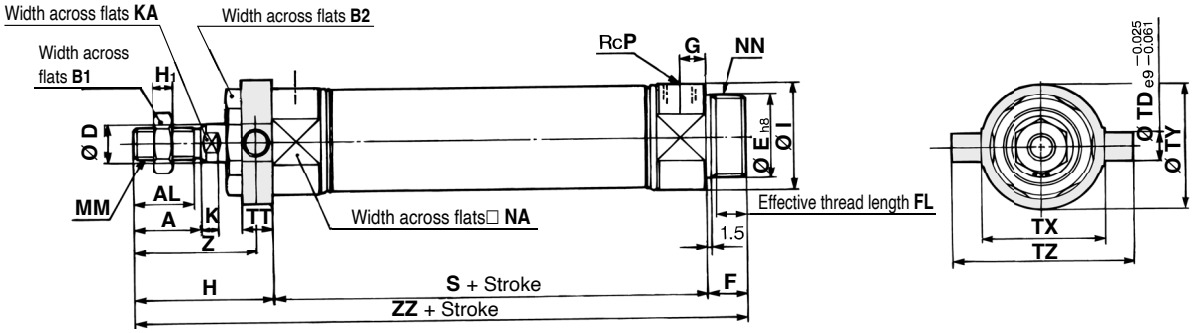

Spring extend

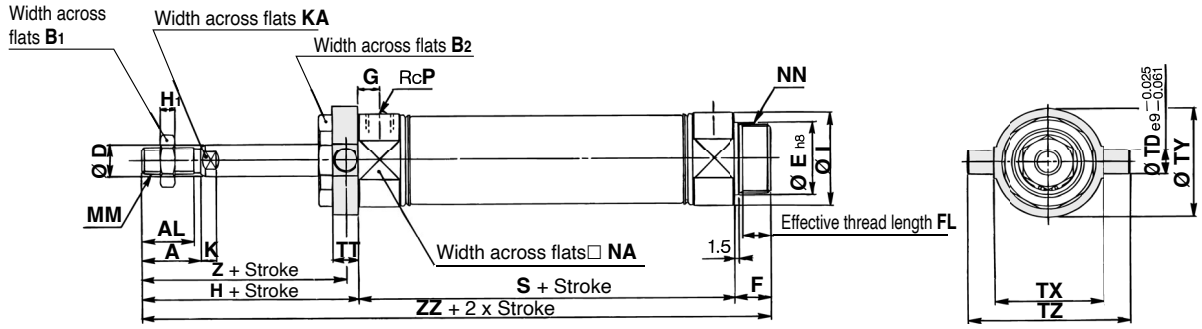

Boss-cut

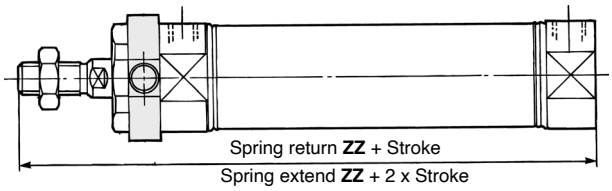

[mm]

Bore size	A	AL	B_1	B_2	D	E	F	FL	G	H	H_1	I	K	KA	MM	NA	NN	P	TD	TT	TX	TY	TZ	Z
20	18	15.5	13	26	8	$20^{0}_{-0.033}$	13	10.5	8	41	5	28	5	6	M8 x 1.25	24	M20 x 1.5	1/8	8	10	32	32	52	36
25	22	19.5	17	32	10	$26^{0}_{-0.033}$	13	10.5	8	45	6	33.5	5.5	8	M10 x 1.25	30	M26 x 1.5	1/8	9	10	40	40	60	40
32	22	19.5	17	32	12	$26^{0}_{-0.033}$	13	10.5	8	45	6	37.5	5.5	10	M10 x 1.25	34.5	M26 x 1.5	1/8	9	10	40	40	60	40
40	24	21	22	41	14	$32^{0}_{-0.039}$	16	13.5	11	50	8	46.5	7	12	M14 x 1.5	42.5	M32 x 2	1/4	10	11	53	53	77	44.5

Dimensions by Stroke

[mm]

Bore size \ Stroke / Symbol	5 to 50		51 to 100		101 to 150		151 to 200		201 to 250	
	S	**ZZ**	**S**	**ZZ**	**S**	**ZZ**	**S**	**ZZ**	**S**	**ZZ**
20	87	141	112	166	137	191	—	—	—	—
25	87	145	112	170	137	195	—	—	—	—
32	89	147	114	172	139	197	164	222	—	—
40	113	179	138	204	163	229	188	254	213	279

Boss-cut

[mm]

Bore size \ Stroke / Symbol	5 to 50	51 to 100	101 to 150	151 to 200	201 to 250
	ZZ	**ZZ**	**ZZ**	**ZZ**	**ZZ**
20	128	153	178	—	—
25	132	157	182	—	—
32	134	159	184	209	—
40	163	188	213	238	263

∗ The bracket is shipped together with the product.
∗ Refer to page 37 for female thread dimensions.

Head Trunnion (T)

CM2T Bore size – Stroke $^{S}_{T}$ Z1

Spring return

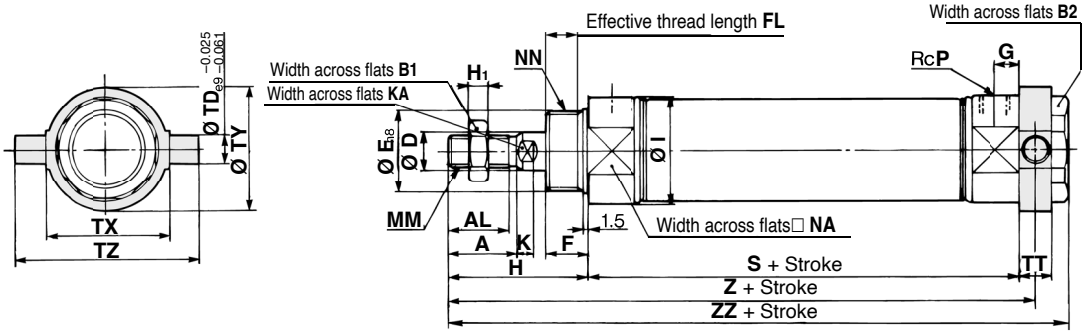

Spring extend

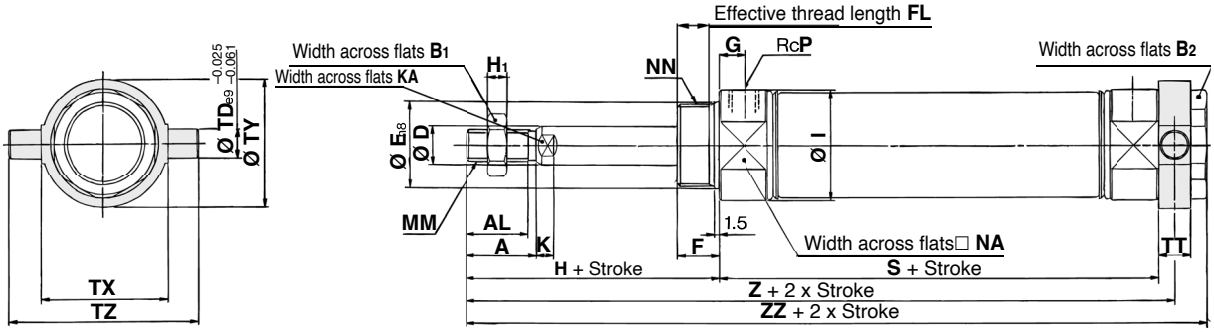

[mm]

Bore size	A	AL	B_1	B_2	D	E	F	FL	G	H	H_1	I	K	KA	MM	NA	NN	P	TD	TT	TX	TY	TZ
20	18	15.5	13	26	8	$20^{0}_{-0.033}$	13	10.5	8	41	5	28	5	6	M8 x 1.25	24	M20 x 1.5	1/8	8	10	32	32	52
25	22	19.5	17	32	10	$26^{0}_{-0.033}$	13	10.5	8	45	6	33.5	5.5	8	M10 x 1.25	30	M26 x 1.5	1/8	9	10	40	40	60
32	22	19.5	17	32	12	$26^{0}_{-0.033}$	13	10.5	8	45	6	37.5	5.5	10	M10 x 1.25	34.5	M26 x 1.5	1/8	9	10	40	40	60
40	24	21	22	41	14	$32^{0}_{-0.039}$	16	13.5	11	50	8	46.5	7	12	M14 x 1.5	42.5	M32 x 2	1/4	10	11	53	53	77

Dimensions by Stroke

[mm]

Bore size \ Stroke / Symbol	5 to 50			51 to 100			101 to 150			151 to 200			201 to 250		
	S	Z	ZZ	S	Z	ZZ	S	Z	ZZ	S	Z	ZZ	S	Z	ZZ
20	87	133	143	112	158	168	137	183	193	—	—	—	—	—	—
25	87	137	147	112	162	172	137	187	197	—	—	—	—	—	—
32	89	139	149	114	164	174	139	189	199	164	214	224	—	—	—
40	113	168.5	179	138	193.5	204	163	218.5	229	188	243.5	254	213	268.5	279

∗ The bracket is shipped together with the product.
∗ Refer to page 37 for female thread dimensions.

Integrated Clevis (E)

CM2E Bore size – Stroke $^{S}_{T}$ Z1

Spring return

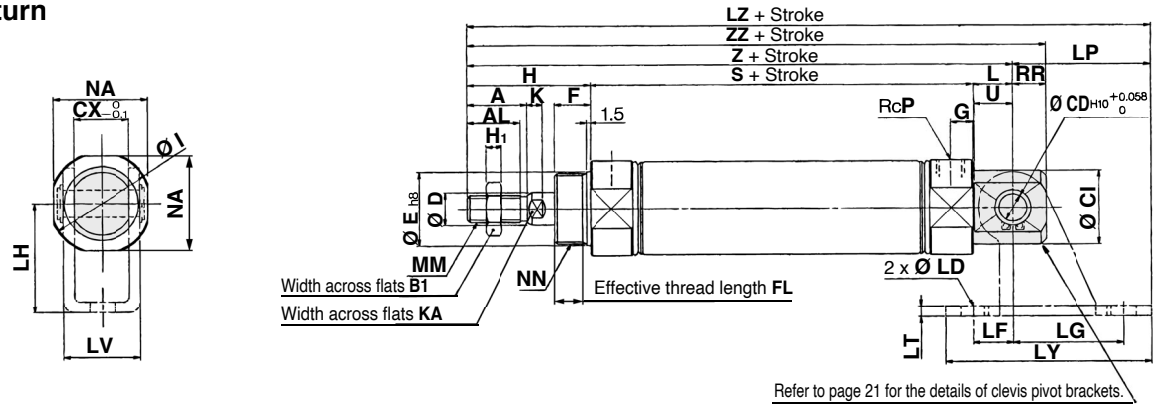

Spring extend

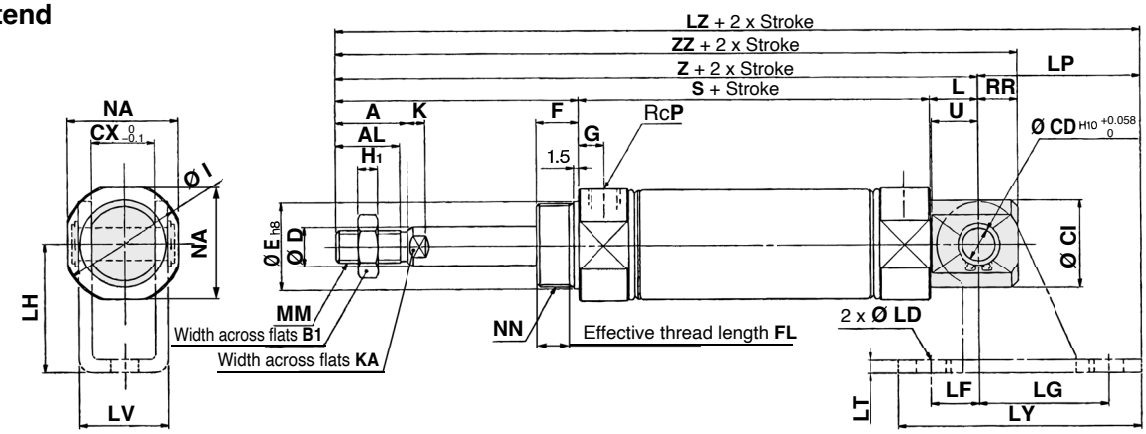

Integrated clevis (90°) (V)

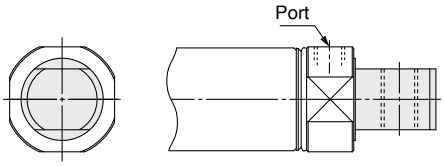

∗ The dimensions are the same as those for the integrated clevis (E).

[mm]

Bore size	A	AL	B1	CD	CI	CX	D	E	F	FL	G	H	H1	I	K	KA	L	MM	NA	NN	P	RR	U
20	18	15.5	13	8	20	12	8	$20^{0}_{-0.033}$	13	10.5	8	41	5	28	5	6	12	M8 x 1.25	24	M20 x 1.5	1/8	9	11.5
25	22	19.5	17	8	22	12	10	$26^{0}_{-0.033}$	13	10.5	8	45	6	33.5	5.5	8	12	M10 x 1.25	30	M26 x 1.5	1/8	9	11.5
32	22	19.5	17	10	27	20	12	$26^{0}_{-0.033}$	13	10.5	8	45	6	37.5	5.5	10	15	M10 x 1.25	34.5	M26 x 1.5	1/8	12	14.5
40	24	21	22	10	33	20	14	$32^{0}_{-0.039}$	16	13.5	11	50	8	46.5	7	12	15	M14 x 1.5	42.5	M32 x 2	1/4	12	14.5

Dimensions by Stroke

[mm]

Bore size \ Stroke / Symbol	5 to 50			51 to 100			101 to 150			151 to 200			201 to 250		
	S	**Z**	**ZZ**	**S**	**Z**	**ZZ**	**S**	**Z**	**ZZ**	**S**	**Z**	**ZZ**	**S**	**Z**	**ZZ**
20	87	140	149	112	165	174	137	190	199	—	—	—	—	—	—
25	87	144	153	112	169	178	137	194	203	—	—	—	—	—	—
32	89	149	161	114	174	186	139	199	211	164	224	236	—	—	—
40	113	178	190	138	203	215	163	228	240	188	253	265	213	278	290

Clevis Pivot Bracket

[mm]

Bore size	LD	LF	LG	LH	LP	LT	LV	LY	1 to 50	51 to 100	101 to 150	151 to 200	201 to 250
									LZ	**LZ**	**LZ**	**LZ**	**LZ**
20	6.8	15	30	30	37	3.2	18.4	59	177	202	227	—	—
25	6.8	15	30	30	37	3.2	18.4	59	181	206	231	—	—
32	9	15	40	40	50	4	28	75	199	224	249	274	—
40	9	15	40	40	50	4	28	75	228	253	278	303	328

∗ Refer to page 37 for female thread dimensions.

Air Cylinder: Non-rotating Rod Type
Double Acting, Single Rod
CM2K Series
Ø 20, Ø 25, Ø 32, Ø 40

RoHS

How to Order

Mounting

B	Basic (Double-side bossed)
L	Axial foot
F	Rod flange
G	Head flange
C	Single clevis
D	Double clevis
U	Rod trunnion

T	Head trunnion
E	Integrated clevis
V	Integrated clevis (90°)
BZ	Boss-cut/Basic
FZ	Boss-cut/ Rod flange
UZ	Boss-cut/ Rod trunnion

Bore size

20	20 mm
25	25 mm
32	32 mm
40	40 mm

Cylinder stroke [mm]
Refer to page 47 for standard strokes.

Cushion

—	Rubber bumper
A	Air cushion

Pivot bracket

—	No bracket
N	Pivot bracket

∗ **Only for C, T, U, E, V, and UZ mounting types**
∗ The pivot bracket is shipped together with the product but does not come assembled.

Made to order
Refer to page 47 for details.

CM2K B 40 □ – 150 A □ Z1 – □ □ – □

With auto switch CDM2K B 40 □ – 150 A □ Z1 – □ □ – M9BW □ – □

With auto switch
(Built-in magnet)

Port thread type

—	Rc
TN	NPT
TF	G

Rod end thread

—	Male rod end
F	Female rod end

Rod end bracket

—	No bracket
V	Single knuckle joint
W	Double knuckle joint
Q	Rod end

∗ No bracket is provided for the female rod end.
∗ A knuckle joint pin is not provided with the single knuckle joint.
∗ The rod end bracket is shipped together with the product but does not come assembled.

Auto switch

—	Without auto switch

∗ For applicable auto switches, refer to the table below.

Number of auto switches

—	2
S	1
n	n

∗ **Refer to page 47 for the ordering example of cylinder assembly.**

Applicable Auto Switches/Refer to the **catalogue on www.smc.eu** for further information on auto switches.

Type	Special function	Electrical entry	Indicator light	Wiring (Output)	Load voltage DC		Load voltage AC	Auto switch model Perpendicular	Auto switch model In-line	Lead wire length [m] 0.5 (–)	1 (M)	3 (L)	5 (Z)	Pre-wired connector	Applicable load	
Solid state auto switch	–––	Grommet	Yes	3-wire (NPN)	24 V	5 V, 12 V	—	M9NV	M9N	●	●	●	○	○	IC circuit	Relay, PLC
				3-wire (PNP)				M9PV	M9P	●	●	●	○	○		
				2-wire		12 V		M9BV	M9B	●	●	●	○	○	—	
	Diagnostic indication (2-colour indicator)	Grommet		3-wire (NPN)		5 V, 12 V		M9NWV	M9NW	●	●	●	○	○	IC circuit	
				3-wire (PNP)				M9PWV	M9PW	●	●	●	○	○		
				2-wire		12 V		M9BWV	M9BW	●	●	●	○	○	—	
	Water resistant (2-colour indicator)			3-wire (NPN)		5 V, 12 V		M9NAV∗1	M9NA∗1	○	○	●	○	○	IC circuit	
				3-wire (PNP)				M9PAV∗1	M9PA∗1	○	○	●	○	○		
				2-wire		12 V		M9BAV∗1	M9BA∗1	○	○	●	○	○	—	
Reed auto switch	–––	Grommet	Yes	3-wire (NPN equivalent)	—	5 V	—	A96V	A96	●	—	●	—	—	IC circuit	—
			No	2-wire	24 V	12 V	100 V	A93V	A93	●	●	●	●	—	—	Relay, PLC
							100 V or less	A90V	A90	●	—	●	—	—	IC circuit	

∗1 Water-resistant type auto switches can be mounted on the above models, but SMC cannot guarantee water resistance.
∗2 The load voltage used is 24 VDC.

∗ Lead wire length symbols: 0.5 m ····· – (Example) M9NW
1 m ····· M (Example) M9NWM
3 m ····· L (Example) M9NWL
5 m ····· Z (Example) M9NWZ

∗ Auto switches marked with a "○" are produced upon receipt of order.

∗ Since there are applicable auto switches other than those listed above, refer to page 64 for details.
∗ For details on auto switches with pre-wired connectors, refer to the **catalogue on www.smc.eu**.
∗ The D-A9□□/M9□□□ auto switches are shipped together with the product but do not come assembled. (Only the auto switch mounting brackets are assembled before shipment.)

A cylinder which rod does not rotate because of the hexagonal rod shape.

Non-rotating accuracy
Ø 20, Ø 25 — ±0.7°∗1
Ø 32, Ø 40 — ±0.5°∗1

Can operate without lubrication.

The same installation dimensions as the standard cylinder.

Auto switches can also be mounted.

It can be installed with auto switches to simplify the detection of the stroke position of the cylinder.

∗1 The hexagonal rod face position is not guaranteed.

Symbol

Rubber bumper

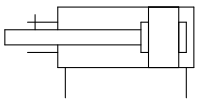

Air cushion

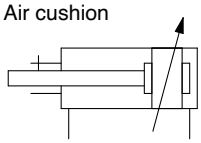

Made to Order

Made to Order Common Specifications
(For details, refer to pages 67 to 74.)

Symbol	Specifications
-XC29	Double knuckle joint with spring pin
-XC52	Mounting nut with set screw

Refer to pages 61 to 66 for cylinders with auto switches.

- Auto Switch Proper Mounting Position (Detection at stroke end) and Mounting Height
- Minimum Stroke for Auto Switch Mounting
- Operating Range
- Auto Switch Mounting Brackets/Part Nos.

Specifications

Bore size [mm]			20	25	32	40
Rod non-rotating accuracy			±0.7°		±0.5°	
Type			Pneumatic			
Action			Double acting, Single rod			
Fluid			Air			
Proof pressure			1.5 MPa			
Max. operating pressure			1.0 MPa			
Min. operating pressure			0.05 MPa			
Ambient and fluid temperatures			Without auto switch: –10 °C to 70 °C With auto switch: –10 °C to 60 °C (No freezing)			
Lubrication			Not required (Non-lube)			
Stroke length tolerance			$^{+1.4}_{0}$ mm			
Piston speed			50 to 500 mm/s			
Cushion			Rubber bumper, Air cushion			
Allowable kinetic energy	**Rubber bumper**	**Male thread**	0.27 J	0.4 J	0.65 J	1.2 J
		Female thread	0.11 J	0.18 J	0.29 J	0.52 J
	Air cushion (Effective cushion length [mm])	**Male thread**	0.54 J (11.0)	0.78 J (11.0)	1.27 J (11.0)	2.35 J (11.8)
		Female thread	0.11 J	0.18 J	0.29 J	0.52 J

Standard Strokes

Bore size [mm]	Standard stroke [mm]∗1	Manufacturable stroke [mm]∗2
20	25, 50, 75, 100, 125, 150, 200, 250, 300	5 to 1000
25		
32		
40		

∗1 Intermediate strokes not listed above are produced upon receipt of order. The manufacturing of intermediate strokes in 1 mm increments is possible. (Spacers are not used.)
∗2 Using a stroke of a length which is smaller than the effective cushion length may result in reduced air cushion performance. Refer to "Technical Data 1" in the **catalogue on www.smc.eu** for details on the effective cushion length.
∗ Applicable strokes should be confirmed according to the usage. For details, refer to the "Air Cylinders Model Selection" in the **catalogue on www.smc.eu**. In addition, the products that exceed the standard stroke might not be able to fulfill the specifications due to deflection, etc.
∗ The min. stroke of the type with a magnet varies depending on the switch. For details, refer to pages 62 and 66.

Option: Ordering Example of Cylinder Assembly

Cylinder model: CDM2KC40-150Z1-NV-M9BW

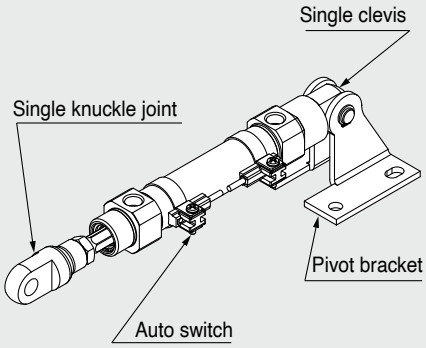

Mounting C: Single clevis
Pivot bracket N: Yes
Rod end bracket V: Single knuckle joint
Auto switch D-M9BW: 2 pcs.

∗ Pivot bracket, single knuckle joint and auto switch are shipped together with the product but do not come assembled.

∗ Pivot bracket is only available for C, T, U, E, V, and UZ mounting types.
∗ No bracket is provided for the female rod end.

Mounting and Accessories

Mounting \ Accessories		Body	Standard (mounted to the body)					Standard (packaged together but does not come assembled)										Option		
			Mounting nut	Rod end nut (Male thread) *1	Single clevis	Double clevis	Liner *7	Mounting nut	Foot	Flange	Pivot bracket	Pivot bracket pin *5	Double clevis pin *5	Trunnion	Mounting nut (For trunnion)	Clevis pivot bracket (CM2E/CM2V)	Clevis pivot bracket pin (CM2E/CM2V) *5	Single knuckle joint	Double knuckle joint *6	Rod end
B	Basic (Double-side bossed)	●(1 pc.)	●(1 pc.)	●(1 pc.)	—	—	—	—	—	—	—	—	—	—	—	—	—	●	●	●
L	Axial foot	●(1 pc.)	●(1 pc.)*2	●(1 pc.)	—	—	—	●(1 pc.)*2	●(2 pcs.)	—	—	—	—	—	—	—	—	●	●	●
F	Rod flange	●(1 pc.)	●(1 pc.)	●(1 pc.)	—	—	—	—	—	●(1 pc.)	—	—	—	—	—	—	—	●	●	●
G	Head flange	●(1 pc.)	●(1 pc.)	●(1 pc.)	—	—	—	—	—	●(1 pc.)	—	—	—	—	—	—	—	●	●	●
C	Single clevis	●(1 pc.)	— *3	●(1 pc.)	●(1 pc.)	—	●(Max. 3 pcs.)	— *3	—	—	—	—	—	—	—	—	—	●	●	●
D	Double clevis	●(1 pc.)	— *3	●(1 pc.)	—	●(1 pc.)	●(Max. 3 pcs.)	— *3	—	—	—	—	●(1 pc.)	—	—	—	—	●	●	●
U	Rod trunnion	●(1 pc.)	— *4	●(1 pc.)	—	—	—	—	—	—	—	—	—	●(1 pc.)	●(1 pc.)	—	—	●	●	●
T	Head trunnion	●(1 pc.)	— *4	●(1 pc.)	—	—	—	—	—	—	—	—	—	●(1 pc.)	●(1 pc.)	—	—	●	●	●
E	Integrated clevis	●(1 pc.)	— *3	●(1 pc.)	—	—	—	— *3	—	—	—	—	—	—	—	—	—	●	●	●
V	Integrated clevis (90°)	●(1 pc.)	— *3	●(1 pc.)	—	—	—	— *3	—	—	—	—	—	—	—	—	—	●	●	●
BZ	Boss-cut/Basic	●(1 pc.)	●(1 pc.)	●(1 pc.)	—	—	—	—	—	—	—	—	—	—	—	—	—	●	●	●
FZ	Boss-cut/ Rod flange	●(1 pc.)	●(1 pc.)	●(1 pc.)	—	—	—	—	—	●(1 pc.)	—	—	—	—	—	—	—	●	●	●
UZ	Boss-cut/ Rod trunnion	●(1 pc.)	— *4	●(1 pc.)	—	—	—	—	—	—	—	—	—	●(1 pc.)	●(1 pc.)	—	—	●	●	●

		Standard (mounted to the body)					Option												
Mounting: **C** Pivot bracket symbol: **N** Single clevis + Pivot bracket + Pin	●(1 pc.)	— *3	●(1 pc.)	●(1 pc.)	—	● (Max. 3 pcs.)	— *3	—	—	●(2 pcs.)	●(1 pc.)	—	—	—	—	—	●	●	●
Mounting: **T, U, UZ** Pivot bracket symbol: **N** Trunnion + Pivot bracket	●(1 pc.)	— *4	●(1 pc.)	—	—	—	— *3	—	—	●(2 pcs.)	—	—	●(1 pc.)	●(1 pc.)	—	—	●	●	●
Mounting: **E** Pivot bracket symbol: **N** Integrated clevis + Pivot bracket + Pin	●(1 pc.)	— *3	●(1 pc.)	—	—	—	— *3	—	—	—	—	—	—	—	●(1 pc.)	●(1 pc.)	●	●	●
Mounting: **V** Pivot bracket symbol: **N** Integrated clevis (90°) + Pivot bracket + Pin	●(1 pc.)	— *3	●(1 pc.)	—	—	—	— *3	—	—	—	—	—	—	—	●(1 pc.)	●(1 pc.)	●	●	●

*1 Rod end nut is not provided for the female rod end.
*2 Two mounting nuts are packaged together.
*3 Mounting nut is not packaged for the clevis.
*4 Trunnion nut is packaged for U, T, and UZ.
*5 Retaining rings are included.
*6 A pin and retaining rings (split pins for Ø 40) are included.
*7 This is the part(s) used to adjust the clevis angle. Mounting quantity can vary.
* Stainless steel mounting brackets and accessories are also available.
Refer to page 71 for details.

Mounting Brackets/Part Nos.

Mounting bracket	Min. order quantity	Bore size [mm] 20	25	32	40	Contents (for min. order quantity)
Foot*1	2	CM-L020B	CM-L032B		CM-L040B	2 foot brackets, 1 mounting nut
Foot*2	1	CMZ1-L020B	CMZ1-L032B		CMZ1-L040B	1 foot bracket
Flange	1	CM-F020B	CM-F032B		CM-F040B	1 flange
Single clevis*3	1	CM-C020B	CM-C032B		CM-C040B	1 single clevis, 3 liners
Double clevis (with pin)*3, *4	1	CM-D020B	CM-D032B		CM-D040B	1 double clevis, 3 liners, 1 clevis pin, 2 retaining rings
Double clevis pin	1	CDP-1			CDP-2	1 clevis pin, 2 retaining rings (split pins)
Trunnion (with nut)	1	CM-T020B	CM-T032B		CM-T040B	1 trunnion, 1 trunnion nut
Rod end nut	1	NT-02	NT-03		NT-04	1 rod end nut
Mounting nut	1	SN-020B	SN-032B		SN-040B	1 mounting nut
Trunnion nut	1	TN-020B	TN-032B		TN-040B	1 trunnion nut
Single knuckle joint	1	I-020B	I-032B		I-040B	1 single knuckle joint
Double knuckle joint	1	Y-020B	Y-032B		Y-040B	1 double knuckle joint, 1 knuckle pin, 2 retaining rings
Rod end	1	KJ8D	KJ10D		KJ14D	1 rod end
Double knuckle joint pin	1	CDP-1			CDP-3	1 knuckle pin, 2 retaining rings (split pins)
Clevis pivot bracket pin (For CM2E/CM2V)	1	CD-S02		CD-S03		1 clevis pin, 2 retaining rings
Clevis pivot bracket (For CM2E/CM2V)	1	CM-E020B		CM-E032B		1 clevis pivot bracket, 1 clevis pin, 2 retaining rings
Pivot bracket (For CM2C)	1	CM-B032			CM-B040	2 pivot brackets (1 of each type)
Pivot bracket pin (For CM2C)	1	CDP-1			CD-S03	1 pin, 2 retaining rings
Pivot bracket (For CM2T/CM2U)	1	CM-B020	CM-B032		CM-B040	2 pivot brackets (1 of each type)

*1 Order two foot brackets per cylinder.
*2 A single foot is available.
*3 3 liners are included with a clevis bracket for adjusting the mounting angle.
*4 A clevis pin and retaining rings (split pins for Ø 40) are included.

For dimensions of accessories (options), refer to pages 20 to 23.

Mounting Brackets, Accessories/Material, Surface Treatment

Segment	Description	Material	Surface treatment
Mounting brackets	Foot	Carbon steel	Nickel plating
	Flange	Carbon steel	Nickel plating
	Single clevis	Carbon steel	Electroless nickel plating
	Double clevis	Carbon steel	Electroless nickel plating
	Trunnion	Cast iron	Electroless nickel plating
Accessories	Rod end nut	Carbon steel	Zinc chromating
	Mounting nut	Carbon steel	Nickel plating
	Trunnion nut	Carbon steel	Nickel plating
	Clevis pivot bracket	Carbon steel	Nickel plating
	Clevis pivot bracket pin	Carbon steel	(None)
	Single knuckle joint	Carbon steel Ø 40: Free-cutting steel	Electroless nickel plating
	Double knuckle joint	Carbon steel Ø 40: Cast iron	Electroless nickel plating Metallic silver colour painting for Ø 40
	Rod end	Carbon steel	Zinc plating
	Double clevis pin	Carbon steel	(None)
	Double knuckle joint pin	Carbon steel	(None)
	Pivot bracket	Carbon steel	Nickel plating
	Pivot bracket pin	Carbon steel	(None)

Weight

[kg]

Bore size [mm]		20	25	32	40
Basic weight	Basic	0.14	0.21	0.28	0.57
	Axial foot	0.29	0.37	0.44	0.84
	Flange	0.20	0.30	0.37	0.69
	Integrated clevis	0.12	0.19	0.27	0.53
	Single clevis	0.18	0.25	0.32	0.66
	Double clevis	0.19	0.27	0.33	0.70
	Trunnion	0.18	0.28	0.34	0.67
	Boss-cut/Basic	0.13	0.19	0.26	0.53
	Boss-cut/Flange	0.19	0.28	0.35	0.66
	Boss-cut/Trunnion	0.17	0.26	0.32	0.63
Additional weight per 50 mm of stroke		0.04	0.07	0.09	0.14
Weight reduction for female rod end		–0.01	–0.02	–0.02	–0.04
Option bracket	Clevis pivot bracket (with pin)	0.07	0.07	0.14	0.14
	Single knuckle joint	0.06	0.06	0.06	0.23
	Double knuckle joint (with pin)	0.07	0.07	0.07	0.20
	Rod end	0.05	0.07	0.07	0.16

Calculation: (Example) **CM2KL32-100Z1**
- Basic weight·····0.44 (Foot, Ø 32)
- Additional weight·····0.09/50 mm stroke
- Cylinder stroke·····100 mm stroke

0.44 + 0.09 x 100/50 = **0.62 kg**

Construction

Rubber bumper

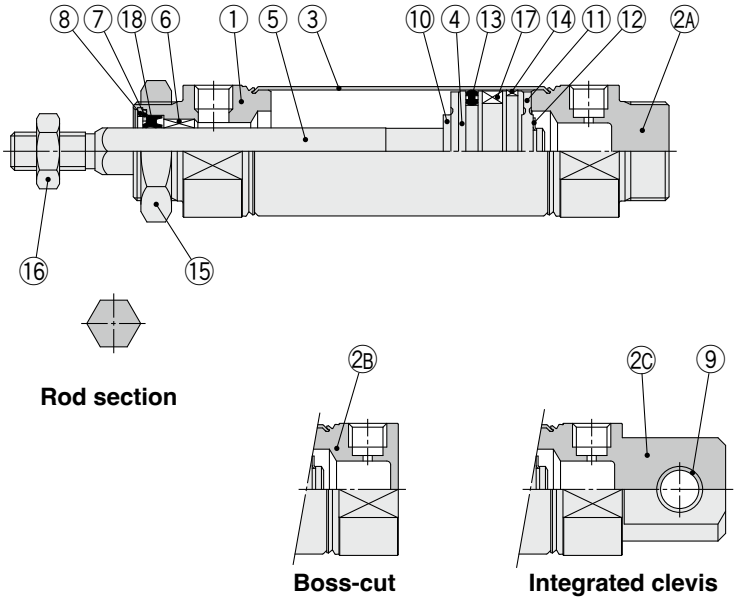

With air cushion

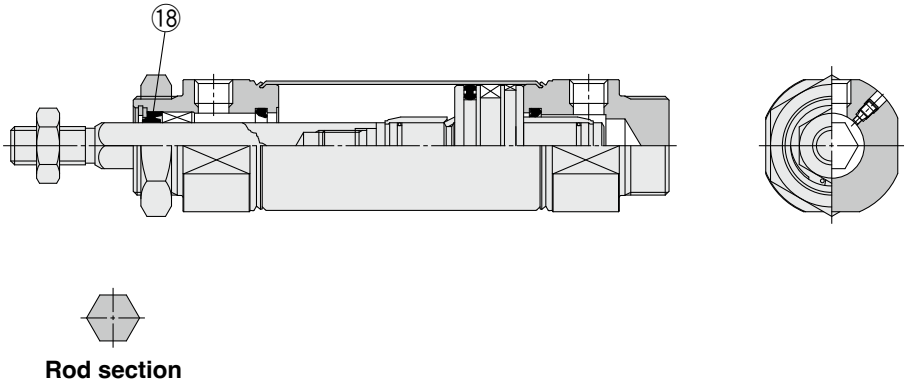

Component Parts

No.	Description	Material	Note
1	**Rod cover**	Aluminium alloy	Anodised
2A	**Head cover A**	Aluminium alloy	Anodised
2B	**Head cover B**	Aluminium alloy	Anodised
2C	**Head cover C**	Aluminium alloy	Anodised
3	**Cylinder tube**	Stainless steel	
4	**Piston**	Aluminium alloy	
5	**Piston rod**	Stainless steel	
6	**Non-rotating guide**	Bearing alloy	
7	**Seal retainer**	Carbon steel	Nickel plating
8	**Retaining ring**	Carbon steel	Phosphate coating
9	**Clevis bushing**	Bearing alloy	
10	**Bumper**	Resin	
11	**Bumper**	Resin	
12	**Retaining ring**	Stainless steel	
13	**Piston seal**	NBR	
14	**Wear ring**	Resin	
15	**Mounting nut**	Carbon steel	Nickel plating
16	**Rod end nut**	Carbon steel	Zinc chromating
17	**Magnet**	—	CDM2K□20 to 40-□Z1
18	**Rod seal**	NBR	

Replacement Parts: Seal

● With Rubber Bumper/With Air Cushion

No.	Description	Material	Part no.			
			20	**25**	**32**	**40**
18	**Rod seal**	NBR	CM2K20-PS	CM2K25-PS	CM2K32-PS	CM2K40-PS

∗ Since the seal does not include a grease pack, order it separately.
Grease pack part number: GR-S-010 (10 g)

Basic (Double-side Bossed) (B)

CM2KB Bore size – Stroke Z1

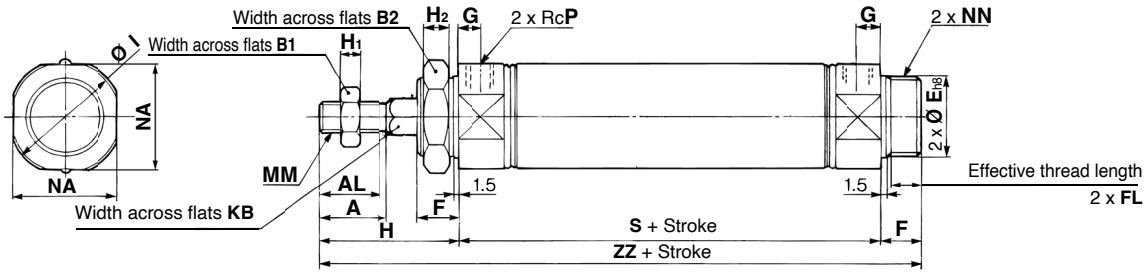

Boss-cut

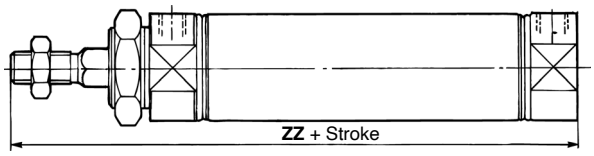

Female rod end

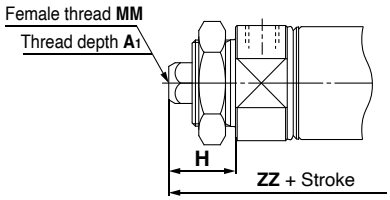

With air cushion

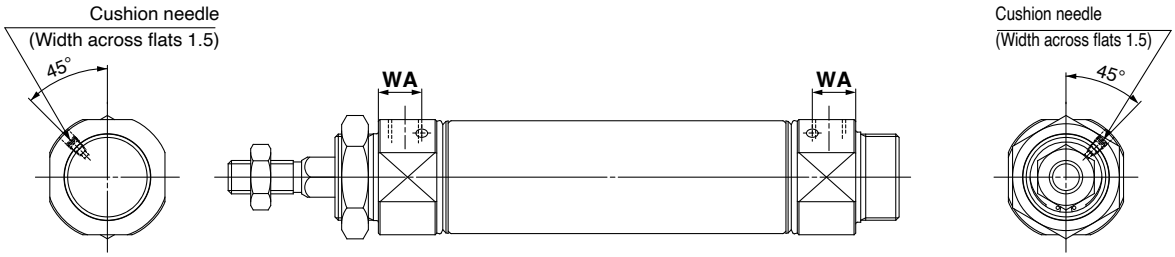

[mm]

Bore size	A	AL	B_1	B_2	E	F	FL	G	H	H_1	H_2	I	KB	MM	NA	NN	P	S	ZZ
20	18	15.5	13	26	$20^{0}_{-0.033}$	13	10.5	8	41	5	8	28	8.2	M8 x 1.25	24	M20 x 1.5	1/8	62	116
25	22	19.5	17	32	$26^{0}_{-0.033}$	13	10.5	8	45	6	8	33.5	10.2	M10 x 1.25	30	M26 x 1.5	1/8	62	120
32	22	19.5	17	32	$26^{0}_{-0.033}$	13	10.5	8	45	6	8	37.5	12.2	M10 x 1.25	34.5	M26 x 1.5	1/8	64	122
40	24	21	22	41	$32^{0}_{-0.039}$	16	13.5	11	50	8	10	46.5	14.2	M14 x 1.5	42.5	M32 x 2	1/4	88	154

Boss-cut [mm]

Bore size	ZZ
20	103
25	107
32	109
40	138

With Air Cushion [mm]

Bore size	WA
20	13
25	13
32	13
40	16

Female Rod End [mm]

Bore size	A_1	H	MM	ZZ
20	8	20	M4 x 0.7	95
25	8	20	M5 x 0.8	95
32	12	20	M6 x 1	97
40	13	21	M8 x 1.25	125

* When a female thread is used, use a thin wrench when tightening the piston rod.
* When a female thread is used, depending on the material of the workpiece, use a washer etc., to prevent the contact part at the rod end from being deformed.

Dimensions of Each Mounting Bracket

The dimensions are the same as standard type, double acting, single rod, except the configuration of the piston rod. Refer to pages 11 to 18.
Specifications for the auto switch equipped type are the same as the CDM2 series standard type.

Air Cylinder: Non-rotating Rod Type
Double Acting, Double Rod
CM2KW Series

RoHS

Ø 20, Ø 25, Ø 32, Ø 40

How to Order

Mounting

B	Basic (Double-side bossed)
L	Axial foot
F	Flange
U	Trunnion

Cylinder stroke [mm]
Refer to page 53 for standard strokes.

Cushion

—	Rubber bumper
A	Air cushion

Made to order
Refer to page 53 for details.

CM2KW L 40 □ – 150 A □ Z1 – □ – □

With auto switch: CDM2KW L 40 □ – 150 A □ Z1 – □ – M9BW □ – □

With auto switch (Built-in magnet)

Non-rotating rod type

Bore size

20	20 mm
25	25 mm
32	32 mm
40	40 mm

Rod end thread

—	Male rod end
F	Female rod end

Number of auto switches

—	2
S	1
n	n

Port thread type

—	Rc
TN	NPT
TF	G

Rod end bracket

—	No bracket	W	Double knuckle joint (With 1 pc.)
V	Single knuckle joint (With 1 pc.)	Q	Rod end (With 1 pc.)

∗ No bracket is provided for the female rod end.
∗ A knuckle joint pin is not provided with the single knuckle joint.
∗ The rod end bracket is shipped together with the product but does not come assembled.

Auto switch

—	Without auto switch

∗ For applicable auto switches, refer to the table below.

Applicable Auto Switches/Refer to the **catalogue on www.smc.eu** for further information on auto switches.

Type	Special function	Electrical entry	Indicator light	Wiring (Output)	Load voltage DC		Load voltage AC	Auto switch model Perpendicular	Auto switch model In-line	Lead wire length [m] 0.5 (–)	1 (M)	3 (L)	5 (Z)	Pre-wired connector	Applicable load	
Solid state auto switch	———	Grommet	Yes	3-wire (NPN)	24 V	5 V, 12 V	—	M9NV	M9N	●	●	●	○	○	IC circuit	Relay, PLC
				3-wire (PNP)				M9PV	M9P	●	●	●	○	○		
				2-wire		12 V		M9BV	M9B	●	●	●	○	○	—	
	Diagnostic indication (2-colour indicator)	Grommet		3-wire (NPN)		5 V, 12 V		M9NWV	M9NW	●	●	●	○	○	IC circuit	
				3-wire (PNP)				M9PWV	M9PW	●	●	●	○	○		
				2-wire		12 V		M9BWV	M9BW	●	●	●	○	○	—	
	Water resistant (2-colour indicator)			3-wire (NPN)		5 V, 12 V		M9NAV∗1	M9NA∗1	○	○	●	○	○	IC circuit	
				3-wire (PNP)				M9PAV∗1	M9PA∗1	○	○	●	○	○		
				2-wire		12 V		M9BAV∗1	M9BA∗1	○	○	●	○	○	—	
Reed auto switch	———	Grommet	Yes	3-wire (NPN equivalent)	—	5 V	—	A96V	A96	●	—	●	—	—	IC circuit	—
			No	2-wire	24 V	12 V	100 V	A93V	A93	●	●	●	●	—	—	Relay, PLC
							100 V or less	A90V	A90	●	—	●	—	—	IC circuit	

∗1 Water-resistant type auto switches can be mounted on the above models, but SMC cannot guarantee water resistance.
∗2 The load voltage used is 24 VDC.

∗ Lead wire length symbols: 0.5 m ····· – (Example) M9NW
1 m ····· M (Example) M9NWM
3 m ····· L (Example) M9NWL
5 m ····· Z (Example) M9NWZ

∗ Auto switches marked with a "○" are produced upon receipt of order.

∗ Since there are applicable auto switches other than those listed above, refer to page 64 for details.
∗ For details on auto switches with pre-wired connectors, refer to the **catalogue on www.smc.eu**.
∗ The D-A9□□/M9□□□ auto switches are shipped together with the product but do not come assembled. (Only the auto switch mounting brackets are assembled before shipment.)

A cylinder which rod does not rotate because of the hexagonal rod shape.

Non-rotating accuracy
Ø 20, Ø 25 —±0.7°∗1
Ø 32, Ø 40 —±0.5°∗1

Can operate without lubrication.

The same installation dimensions as the standard cylinder.

Auto switches can also be mounted.

It can be installed with auto switches to simplify the detection of the stroke position of the cylinder.

∗1 The hexagonal rod face position is not guaranteed.

Symbol

Rubber bumper

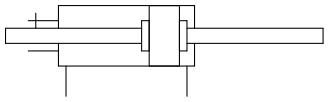

Air cushion

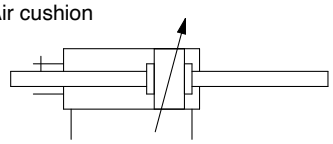

Made to Order

Made to Order Common Specifications
(For details, refer to pages 67 to 74.)

Symbol	Specifications
-XC52	Mounting nut with set screw

Specifications

Bore size [mm]			20	25	32	40
Rod non-rotating accuracy			±0.7°		±0.5°	
Type			Pneumatic			
Cushion			Rubber bumper, Air cushion			
Action			Double acting, Double rod			
Fluid			Air			
Proof pressure			1.5 MPa			
Max. operating pressure			1.0 MPa			
Min. operating pressure			0.08 MPa			
Ambient and fluid temperatures			Without auto switch: –10 °C to 70 °C With auto switch: –10 °C to 60 °C (No freezing)			
Lubrication			Not required (Non-lube)			
Stroke length tolerance			$^{+1.4}_{0}$ mm			
Piston speed			50 to 500 mm/s			
Allowable kinetic energy	**Rubber bumper**	Male thread	0.27 J	0.4 J	0.65 J	1.2 J
		Female thread	0.11 J	0.18 J	0.29 J	0.52 J
	Air cushion (Effective cushion length [mm])	Male thread	0.54 J (11.0)	0.78 J (11.0)	1.27 J (11.0)	2.35 J (11.8)
		Female thread	0.11 J	0.18 J	0.29 J	0.52 J

Standard Strokes

Bore size [mm]	Standard stroke [mm]∗1	Manufacturable stroke [mm]∗2
20	25, 50, 75, 100, 125, 150, 200, 250, 300	5 to 500
25		
32		
40		

∗1 Intermediate strokes not listed above are produced upon receipt of order. The manufacturing of intermediate strokes in 1 mm increments is possible. (Spacers are not used.)
∗2 Using a stroke of a length which is smaller than the effective cushion length may result in reduced air cushion performance. Refer to "Technical Data 1" in the **catalogue on www.smc.eu** for details on the effective cushion length.
∗ Applicable strokes should be confirmed according to the usage. For details, refer to the "Air Cylinders Model Selection" in the **catalogue on www.smc.eu**. In addition, the products that exceed the standard stroke might not be able to fulfill the specifications due to deflection, etc.
∗ The min. stroke of the type with a magnet varies depending on the switch. For details, refer to pages 62 and 66.

Accessories

Refer to pages 20 to 23 for accessories, since it is the same as standard type, double acting, single rod.

∗ Stainless steel mounting brackets and accessories are also available.
Refer to page 22 for details.

Mounting and Accessories

Mounting \ Accessory	Standard		Option		
	Mounting nut	Rod end nut	Single knuckle joint	Double knuckle joint ∗2	Rod end
Basic	● (1 pc.)	● (2 pcs.)	●	●	●
Axial foot	● (2 pcs.)	● (2 pcs.)	●	●	●
Flange	● (1 pc.)	● (2 pcs.)	●	●	●
Trunnion	● (1 pc.)∗1	● (2 pcs.)	●	●	●

∗1 Trunnion nut is attached to the trunnion.
∗2 A pin and retaining rings (split pins for Ø 40) are shipped together with double knuckle joint.

Refer to pages 61 to 66 for cylinders with auto switches.

- Auto Switch Proper Mounting Position (Detection at stroke end) and Mounting Height
- Minimum Stroke for Auto Switch Mounting
- Operating Range
- Auto Switch Mounting Brackets/Part Nos.

Weight

[kg]

Bore size [mm]		20	25	32	40
Basic weight	Basic (Double-side bossed)	0.16	0.25	0.32	0.66
	Axial foot	0.31	0.41	0.48	0.93
	Flange	0.22	0.34	0.41	0.78
	Trunnion	0.20	0.32	0.38	0.76
Additional weight per 50 mm of stroke		0.06	0.1	0.14	0.20
Weight reduction for female rod end		–0.02	–0.04	–0.04	–0.08
Option bracket	Single knuckle joint	0.06	0.06	0.06	0.23
	Double knuckle joint (with pin)	0.07	0.07	0.07	0.20
	Rod end	0.05	0.07	0.07	0.16

Calculation: (Example) **CM2KWL32-100Z1**
- Basic weight·····0.48 (Foot, Ø 32)
- Additional weight·····0.14/50 mm stroke
- Cylinder stroke·····100 mm stroke

0.48 + 0.14 x 100/50 = **0.76 kg**

Mounting Brackets/Part Nos.

Mounting bracket	Min. order quantity	Bore size [mm] 20	25	32	40	Contents (for min. order quantity)
Axial foot*1	2	CM-L020B	CM-L032B		CM-L040B	2 foot brackets, 1 mounting nut
Flange	1	CM-F020B	CM-F032B		CM-F040B	1 flange
Trunnion (with nut)	1	CM-T020B	CM-T032B		CM-T040B	1 trunnion, 1 trunnion nut
Single knuckle joint	1	I-020B	I-032B		I-040B	1 single knuckle joint
Double knuckle joint	1	Y-020B	Y-032B		Y-040B	1 double knuckle joint, 1 knuckle pin, 2 retaining rings
Rod end	1	KJ8D	KJ10D		KJ14D	1 rod end
Double knuckle joint pin	1	CDP-1			CDP-3	1 knuckle pin, 2 retaining rings (split pins)

*1 Order two foot brackets per cylinder.

Construction

Rubber bumper

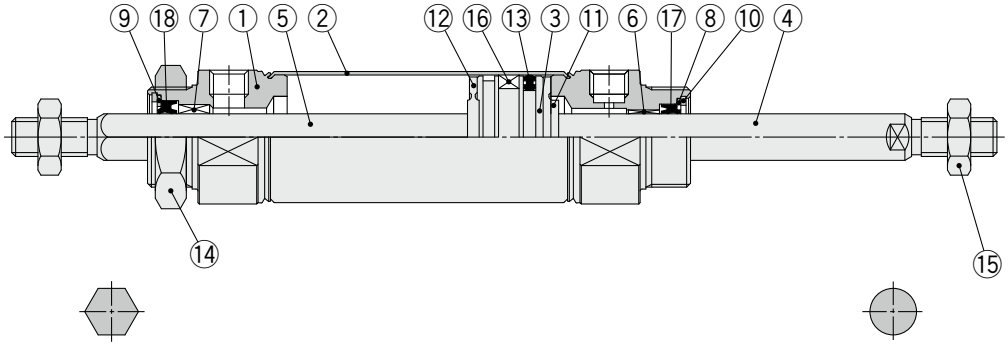

Rod section

Rod section

With air cushion

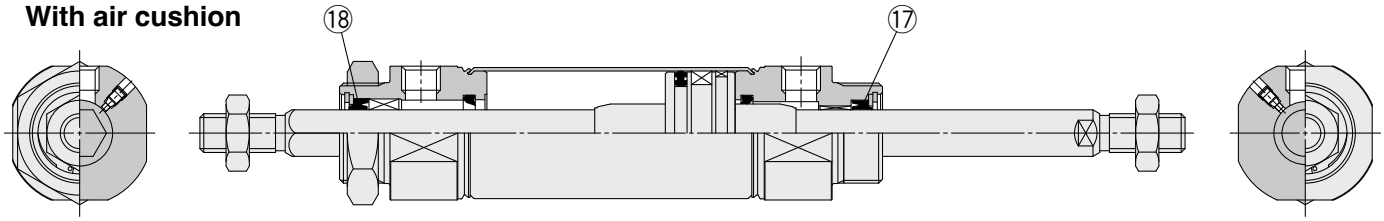

Rod section

Rod section

Component Parts

No.	Description	Material	Note
1	**Rod cover**	Aluminium alloy	Anodised
2	**Cylinder tube**	Stainless steel	
3	**Piston**	Aluminium alloy	
4	**Piston rod A**	Carbon steel	Hard chrome plating
5	**Piston rod B**	Stainless steel	
6	**Bushing**	Bearing alloy	
7	**Non-rotating guide**	Bearing alloy	
8	**Seal retainer A**	Stainless steel	
9	**Seal retainer B**	Carbon steel	Nickel plating
10	**Retaining ring**	Carbon steel	Phosphate coating
11	**Bumper**	Resin	
12	**Bumper**	Resin	
13	**Piston seal**	NBR	
14	**Mounting nut**	Carbon steel	Nickel plating
15	**Rod end nut**	Carbon steel	Zinc chromating
16	**Magnet**	—	CDM2KW□20 to 40-□Z1
17	**Rod seal A**	NBR	
18	**Rod seal B**	NBR	

Replacement Parts: Seal

● With Rubber Bumper/With Air Cushion

No.	Description	Material	Bore size [mm] 20	25	32	40
17	**Rod seal A**	NBR	CM20Z-PS	CM25Z-PS	CM32Z-PS	CM40Z-PS
18	**Rod seal B**	NBR	CM2K20-PS	CM2K25-PS	CM2K32-PS	CM2K40-PS

* Since the seal does not include a grease pack, order it separately.
Grease pack part number: GR-S-010 (10 g)

Basic (Double-side Bossed) (B)

CM2KWB Bore size – Stroke Z1

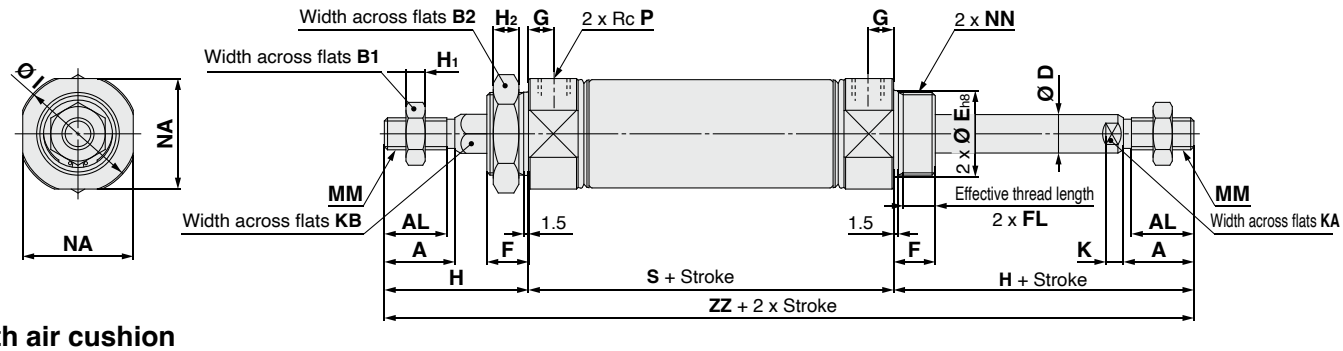

With air cushion

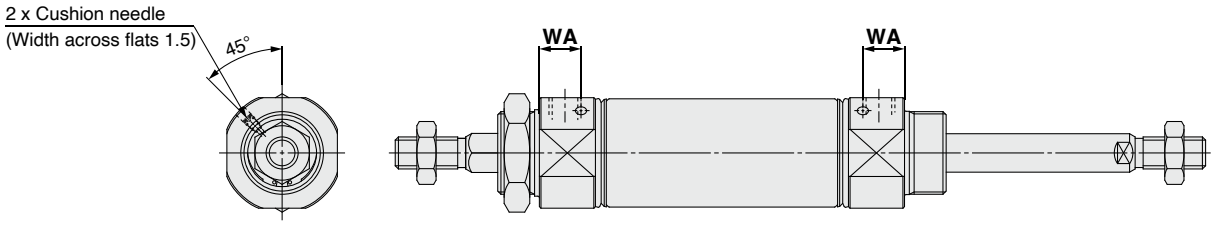

Female rod end

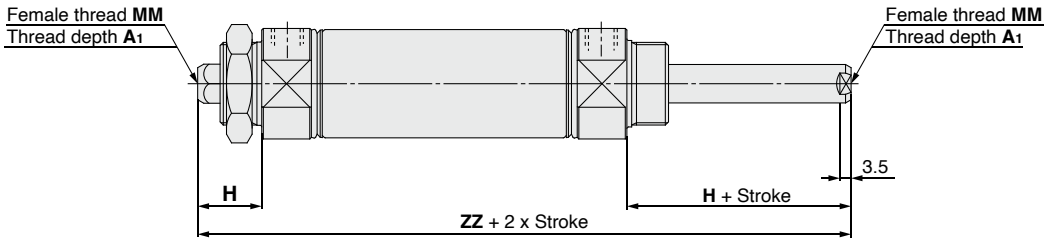

[mm]

Bore size	A	AL	B_1	B_2	D	E	F	FL	G	H	H_1	H_2	I	K	KA	KB	MM	NA	NN	P	S	ZZ
20	18	15.5	13	26	8	$20^{0}_{-0.033}$	13	10.5	8	41	5	8	28	5	6	8.2	M8 x 1.25	24	M20 x 1.5	1/8	62	144
25	22	19.5	17	32	10	$26^{0}_{-0.033}$	13	10.5	8	45	6	8	33.5	5.5	8	10.2	M10 x 1.25	30	M26 x 1.5	1/8	62	152
32	22	19.5	17	32	12	$26^{0}_{-0.033}$	13	10.5	8	45	6	8	37.5	5.5	10	12.2	M10 x 1.25	34.5	M26 x 1.5	1/8	64	154
40	24	21	22	41	14	$32^{0}_{-0.039}$	16	13.5	11	50	8	10	46.5	7	12	14.2	M14 x 1.5	42.5	M32 x 2	1/4	88	188

With Air Cushion [mm]

Bore size	WA
20	13
25	13
32	13
40	16

Female Rod End [mm]

Bore size	A_1	H	MM	ZZ
20	8	20	M4 x 0.7	102
25	8	20	M5 x 0.8	102
32	12	20	M6 x 1	104
40	13	21	M8 x 1.25	130

* When a female thread is used, use a thin wrench when tightening the piston rod.
* When a female thread is used, depending on the material of the workpiece, use a washer etc., to prevent the contact part at the rod end from being deformed.

Dimensions of Each Mounting Bracket

The dimensions of each mounting bracket other than basic type are the same as standard type, double acting, double rod (except KA dimension). Refer to pages 28 to 30.

Air Cylinder: Direct Mount Type
Double Acting, Single Rod
CM2R Series
Ø 20, Ø 25, Ø 32, Ø 40

RoHS

How to Order

Bore size

20	20 mm
25	25 mm
32	32 mm
40	40 mm

Cylinder stroke [mm]
Refer to page 57 for standard strokes.

Cushion

—	Rubber bumper
A	Air cushion

Made to order
Refer to page 57 for details.

CM2R A 20 □ – 100 A □ Z1 – □ – □

With auto switch CDM2R A 20 □ – 100 A □ Z1 – □ – M9BW □ – □

With auto switch
(Built-in magnet)

Mounting

A	Bottom mounting type
B	Front mounting type

Port thread type

—	Rc
TN	NPT
TF	G

Rod end thread

—	Male rod end
F	Female rod end

Rod end bracket

—	No bracket
V	Single knuckle joint
W	Double knuckle joint
Q	Rod end

∗ No bracket is provided for the female rod end.
∗ A knuckle joint pin is not provided with the single knuckle joint.
∗ The rod end bracket is shipped together with the product but does not come assembled.

Number of auto switches

—	2
S	1
n	n

Auto switch

—	Without auto switch

∗ For applicable auto switches, refer to the table below.

∗ **Refer to page 57 for the ordering example of cylinder assembly.**

Applicable Auto Switches/Refer to the **catalogue on www.smc.eu** for further information on auto switches.

Type	Special function	Electrical entry	Indicator light	Wiring (Output)	Load voltage DC		Load voltage AC	Auto switch model Perpendicular	Auto switch model In-line	Lead wire length [m] 0.5 (–)	1 (M)	3 (L)	5 (Z)	Pre-wired connector	Applicable load	
Solid state auto switch	–––	Grommet	Yes	3-wire (NPN)	24 V	5 V, 12 V	–	M9NV	M9N	●	●	●	○	○	IC circuit	Relay, PLC
				3-wire (PNP)				M9PV	M9P	●	●	●	○	○		
				2-wire		12 V		M9BV	M9B	●	●	●	○	○	–	
	Diagnostic indication (2-colour indicator)	Grommet		3-wire (NPN)		5 V, 12 V		M9NWV	M9NW	●	●	●	○	○	IC circuit	
				3-wire (PNP)				M9PWV	M9PW	●	●	●	○	○		
				2-wire		12 V		M9BWV	M9BW	●	●	●	○	○	–	
	Water resistant (2-colour indicator)			3-wire (NPN)		5 V, 12 V		M9NAV∗1	M9NA∗1	○	○	●	○	○	IC circuit	
				3-wire (PNP)				M9PAV∗1	M9PA∗1	○	○	●	○	○		
				2-wire		12 V		M9BAV∗1	M9BA∗1	○	○	●	○	○	–	
Reed auto switch	–––	Grommet	Yes	3-wire (NPN equivalent)	–	5 V	–	A96V	A96	●	–	●	–	–	IC circuit	–
			No	2-wire	24 V	12 V	100 V	A93V	A93	●	●	●	●	–	–	Relay, PLC
							100 V or less	A90V	A90	●	–	●	–	–	IC circuit	

∗1 Water-resistant type auto switches can be mounted on the above models, but SMC cannot guarantee water resistance.
∗2 The load voltage used is 24 VDC.

∗ Lead wire length symbols: 0.5 m·····– (Example) M9NW
1 m····· M (Example) M9NWM
3 m····· L (Example) M9NWL
5 m····· Z (Example) M9NWZ

∗ Auto switches marked with a "○" are produced upon receipt of order.

∗ Since there are applicable auto switches other than those listed above, refer to page 64 for details.
∗ For details on auto switches with pre-wired connectors, refer to the **catalogue on www.smc.eu**.
∗ The D-A9□□/M9□□□ auto switches are shipped together with the product but do not come assembled. (Only the auto switch mounting brackets are assembled before shipment.)

The CM2R direct mount cylinder can be installed directly through the use of a square rod cover.

Space saving has been realized.

Because it is a directly mounted type without using brackets, its overall length is shorter, and its installation pitch can be made smaller. Thus, the space that is required for installation has been dramatically reduced.

Improved installation accuracy and strength

A centering boss has been provided to improve the installation accuracy. Also, because it is the directly mounted type, the strength has been increased.

Two types of installation

Two types of installations are available and can be selected according to the purpose: the front mounting type or the bottom mounting type.

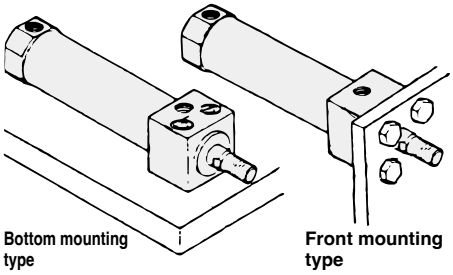

Symbol

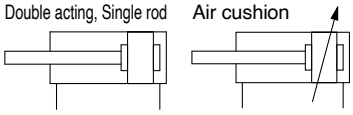

Made to Order

Made to Order Common Specifications (For details, refer to pages 67 to 74.)

Symbol	Specifications
-XB6	Heat-resistant cylinder (–10 to 150 °C)
-XB7	Cold-resistant cylinder (–40 to 70 °C)∗1
-XB9	Low-speed cylinder (10 to 50 mm/s)∗1
-X446	PTFE grease∗1

∗1 Rubber bumper only

Refer to pages 61 to 66 for cylinders with auto switches.

- Auto Switch Proper Mounting Position (Detection at stroke end) and Mounting Height
- Minimum Stroke for Auto Switch Mounting
- Operating Range
- Auto Switch Mounting Brackets/Part Nos.

Specifications

Bore size [mm]			20	25	32	40
Action			Double acting, Single rod			
Fluid			Air			
Proof pressure			1.5 MPa			
Max. operating pressure			1.0 MPa			
Min. operating pressure			0.05 MPa			
Ambient and fluid temperatures			Without auto switch: –10 °C to 70 °C With auto switch: –10 °C to 60 °C (No freezing)			
Lubrication			Not required (Non-lube)			
Stroke length tolerance			$^{+1.4}_{0}$ mm			
Piston speed			Rubber bumper: 50 to 750 mm/s, Air cushion: 50 to 1000 mm/s			
Cushion			Rubber bumper, Air cushion			
Allowable kinetic energy	**Rubber bumper**	Male thread	0.27 J	0.4 J	0.65 J	1.2 J
		Female thread	0.11 J	0.18 J	0.29 J	0.52 J
	Air cushion (Effective cushion length [mm])	Male thread	0.54 J (11.0)	0.78 J (11.0)	1.27 J (11.0)	2.35 J (11.8)
		Female thread	0.11 J	0.18 J	0.29 J	0.52 J

Standard Strokes

Bore size [mm]	Standard stroke [mm]∗1	Manufacturable stroke [mm]∗2
20	25, 50, 75, 100, 125, 150	5 to 1000
25	25, 50, 75, 100, 125, 150, 200	
32	25, 50, 75, 100, 125, 150, 200	
40	25, 50, 75, 100, 125, 150, 200, 250, 300	

∗1 Intermediate strokes not listed above are produced upon receipt of order. The manufacturing of intermediate strokes in 1 mm increments is possible. (Spacers are not used.)

∗2 Using a stroke of a length which is smaller than the effective cushion length may result in reduced air cushion performance. Refer to "Technical Data 1" in the **catalogue on www.smc.eu** for details on the effective cushion length.

∗ Applicable strokes should be confirmed according to the usage. For details, refer to the "Air Cylinders Model Selection" in the **catalogue on www.smc.eu**. In addition, the products that exceed the standard stroke might not be able to fulfill the specifications due to deflection, etc.

∗ The min. stroke of the type with a magnet varies depending on the switch. For details, refer to pages 62 and 66.

Tightening Torque: Tighten the cylinder mounting bolts for the bottom mounting type (CM2RA series) with the following tightening torque.

Bore size [mm]	Hexagon socket head cap screw size	Tightening torque [N·m]
20	M5 x 0.8	2.4 to 3.6
25	M6	4.2 to 6.2
32	M8	10.0 to 15.0
40	M10	19.6 to 29.4

Option: Ordering Example of Cylinder Assembly

Cylinder model: CDM2RA20-100Z1-V-M9BW

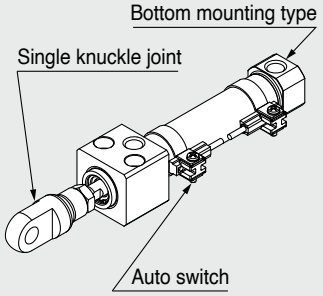

Mounting A: Bottom mounting type
Rod end bracket V: Single knuckle joint
Auto switch D-M9BW: 2 pcs.

∗ Single knuckle joint and auto switch are shipped together with the product but do not come assembled.

∗ No bracket is provided for the female rod end.

Accessories

Mounting \ Accessories	Standard	Option		
	Rod end nut	Single knuckle joint	Double knuckle joint (with pin)*1	Rod end
Bottom mounting type	●	●	●	●
Front mounting type	●	●	●	●

*1 A knuckle pin and retaining rings (split pin for Ø 40) are shipped together with the product.
* For dimensions and part numbers of options, refer to pages 20 to 22.
* Stainless steel accessories are also available. Refer to page 22 for details.

Accessories/Material, Surface Treatment

Segment	Description	Material	Surface treatment
Accessories	Single knuckle joint	Carbon steel Ø 40: Free-cutting steel	Electroless nickel plating
	Double knuckle joint	Carbon steel Ø 40: Cast iron	Electroless nickel plating Metallic silver colour painting for Ø 40
	Rod end	Carbon steel	Zinc plating

Weight

[kg]

Bore size [mm]		20	25	32	40
Basic weight	Bottom mounting type	0.14	0.23	0.32	0.62
	Front mounting type	0.14	0.22	0.32	0.61
Additional weight per 50 mm of stroke		0.04	0.06	0.08	0.13
Weight reduction for female rod end		–0.01	–0.02	–0.02	–0.04
Option bracket	Single knuckle joint	0.06	0.06	0.06	0.23
	Double knuckle joint (with pin)	0.07	0.07	0.07	0.20
	Rod end	0.05	0.07	0.07	0.16

Calculation: (Example) **CM2RA32-100Z1**
(Ø 32, 100 mm stroke, Bottom mounting)
- Basic weight·····0.32 kg
- Additional weight·····0.08 kg
- Cylinder stroke·····100 mm stroke

0.32 + 0.08 x 100/50 = **0.48 kg**

Accessories/Part Nos.

Mounting bracket	Min. order quantity	Bore size [mm]				Contents (for min. order quantity)
		20	25	32	40	
Single knuckle joint	1	I-020B	I-032B		I-040B	1 single knuckle joint
Double knuckle joint	1	Y-020B	Y-032B		Y-040B	1 double knuckle joint, 1 knuckle pin, 2 retaining rings
Rod end	1	KJ8D	KJ10D		KJ14D	1 rod end
Double knuckle joint pin	1	CDP-1			CDP-3	1 knuckle pin, 2 retaining rings (split pins)

Construction

Rubber bumper

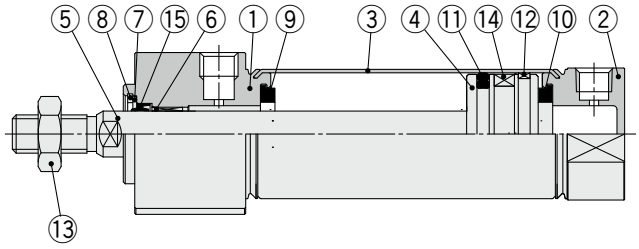

With air cushion

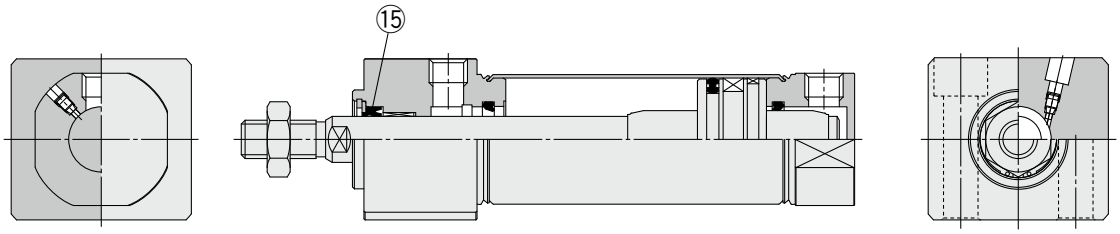

Component Parts

No.	Description	Material	Note
1	**Rod cover**	Aluminium alloy	Anodised
2	**Head cover**	Aluminium alloy	Anodised
3	**Cylinder tube**	Stainless steel	
4	**Piston**	Aluminium alloy	
5	**Piston rod**	Carbon steel	Hard chrome plating
6	**Bushing**	Bearing alloy	
7	**Seal retainer**	Stainless steel	
8	**Retaining ring**	Carbon steel	Phosphate coating
9	**Bumper**	Resin	
10	**Bumper**	Resin	
11	**Piston seal**	NBR	
12	**Wear ring**	Resin	
13	**Rod end nut**	Carbon steel	Zinc chromating
14	**Magnet**	—	CDM2R□20 to 40-□Z1
15	**Rod seal**	NBR	

Replacement Parts: Seal

● With Rubber Bumper/With Air Cushion

No.	Description	Material	Part no.			
			20	25	32	40
15	**Rod seal**	NBR	CM20Z-PS	CM25Z-PS	CM32Z-PS	CM40Z-PS

* Since the seal does not include a grease pack, order it separately.
Grease pack part number: GR-S-010 (10 g)

Bottom Mounting Type

CM2RA Bore size – Stroke Z1

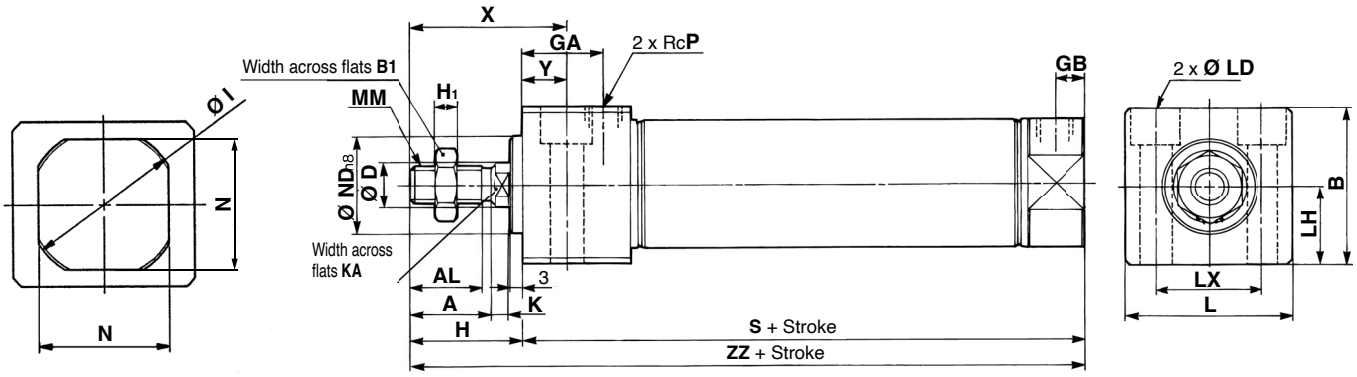

With air cushion

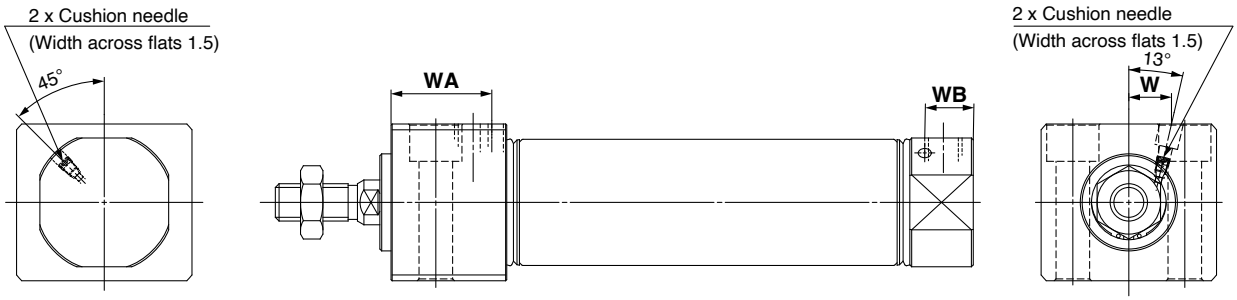

Female rod end

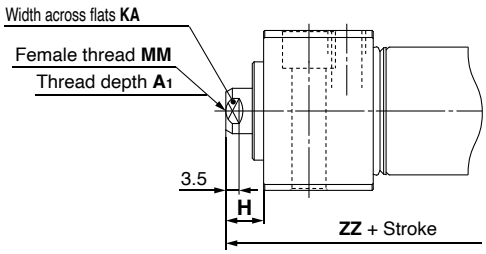

[mm]

Bore size	A	AL	B	B_1	D	GA	GB	H	H_1	I	K	KA	L	LD	LH	LX	MM	N	ND	P	S	X	Y	ZZ
20	18	15.5	30.3	13	8	22	8	27	5	28	5	6	33.5	Ø 5.5, Ø 9.5 counterbore depth 6.5	15	21	M8 x 1.25	24	$20^{0}_{-0.033}$	1/8	76	39	12	103
25	22	19.5	36.3	17	10	22	8	31	6	33.5	5.5	8	39	Ø 6.6, Ø 11 counterbore depth 7.5	18	25	M10 x 1.25	30	$26^{0}_{-0.033}$	1/8	76	43	12	107
32	22	19.5	42.3	17	12	22	8	31	6	37.5	5.5	10	47	Ø 9, Ø 14 counterbore depth 10	21	30	M10 x 1.25	34.5	$26^{0}_{-0.033}$	1/8	78	43	12	109
40	24	21	52.3	22	14	27	11	34	8	46.5	7	12	58.5	Ø 11, Ø 17.5 counterbore depth 12.5	26	38	M14 x 1.5	42.5	$32^{0}_{-0.039}$	1/4	104	49	15	138

With Air Cushion

[mm]

Bore size	WA	WB	W
20	27	13	8.5
25	27	13	10.5
32	27	13	11.5
40	32	16	15

Female Rod End

[mm]

Bore size	A_1	H	KA	MM	ZZ
20	8	10	6	M4 x 0.7	86
25	8	10	8	M5 x 0.8	86
32	12	10	10	M6 x 1	88
40	13	10	12	M8 x 1.25	114

* When a female thread is used, use a thin wrench when tightening the piston rod.
* When a female thread is used, depending on the material of the workpiece, use a washer etc., to prevent the contact part at the rod end from being deformed.

Front Mounting Type

CM2RB Bore size – Stroke Z1

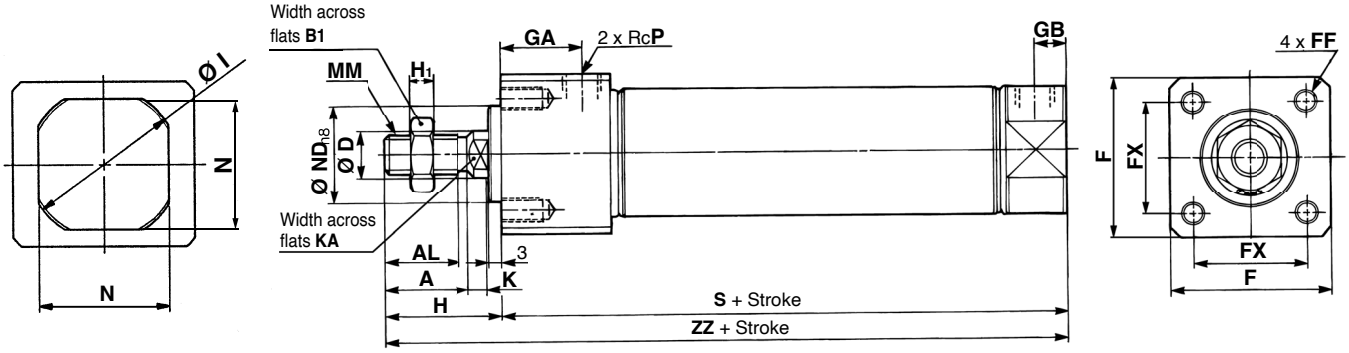

With air cushion

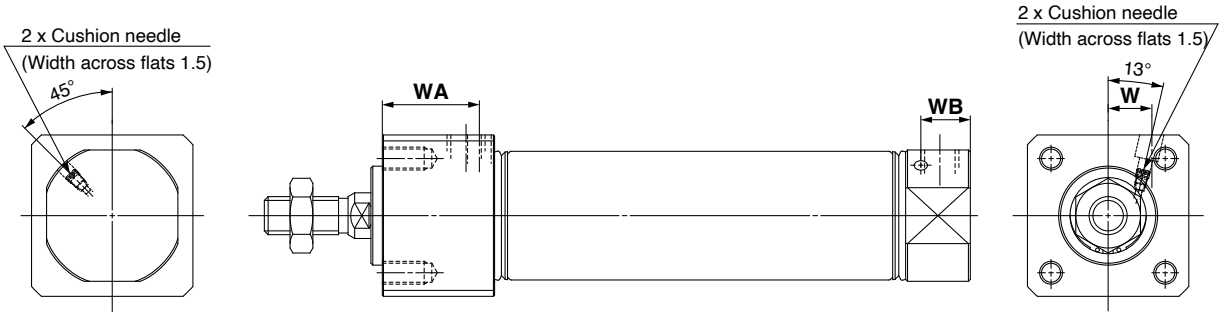

Female rod end

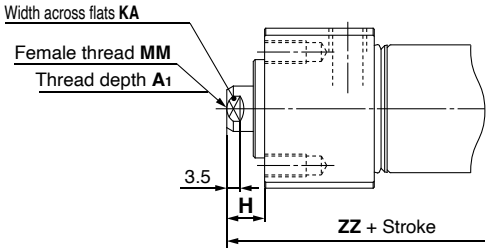

[mm]

Bore size	A	AL	B_1	D	F	FF	FX	GA	GB	H	H_1	I	K	KA	MM	N	ND	P	S	ZZ
20	18	15.5	13	8	30.4	M5 x 0.8 depth 9	22	22	8	27	5	28	5	6	M8 x 1.25	24	$20^{0}_{-0.033}$	1/8	76	103
25	22	19.5	17	10	36.4	M6 x 1 depth 11	26	22	8	31	6	33.5	5.5	8	M10 x 1.25	30	$26^{0}_{-0.033}$	1/8	76	107
32	22	19.5	17	12	42.4	M6 x 1 depth 11	30	22	8	31	6	37.5	5.5	10	M10 x 1.25	34.5	$26^{0}_{-0.033}$	1/8	78	109
40	24	21	22	14	52.4	M8 x 1.25 depth 14	36	27	11	34	8	46.5	7	12	M14 x 1.5	42.5	$32^{0}_{-0.039}$	1/4	104	138

With Air Cushion

[mm]

Bore size	WA	WB	W
20	27	13	8.5
25	27	13	10.5
32	27	13	11.5
40	32	16	15

Female Rod End

[mm]

Bore size	A_1	H	KA	MM	ZZ
20	8	10	6	M4 x 0.7	86
25	8	10	8	M5 x 0.8	86
32	12	10	10	M6 x 1	88
40	13	10	12	M8 x 1.25	114

* When a female thread is used, use a thin wrench when tightening the piston rod.
* When a female thread is used, depending on the material of the workpiece, use a washer etc., to prevent the contact part at the rod end from being deformed.

Auto Switch Mounting

Auto Switch Proper Mounting Position (Detection at stroke end) and Mounting Height

Solid state auto switch

D-M9□
D-M9□E
D-M9□W
D-M9□A

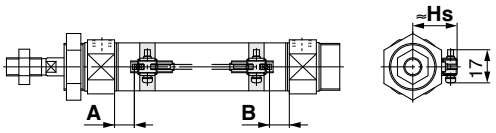

A and B are the dimensions from the end of the head cover/rod cover to the end of the auto switch.

D-M9□V
D-M9□EV
D-M9□WV
D-M9□AV

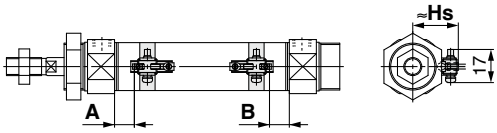

A and B are the dimensions from the end of the head cover/rod cover to the end of the auto switch.

Reed auto switch

D-A9□

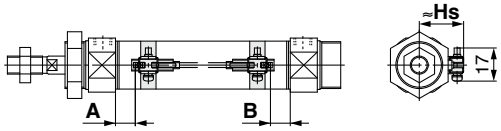

A and B are the dimensions from the end of the head cover/rod cover to the end of the auto switch.

D-A9□V

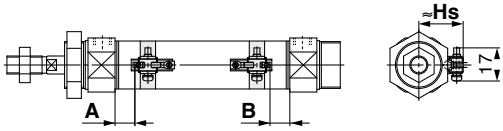

A and B are the dimensions from the end of the head cover/rod cover to the end of the auto switch.

Applicable Cylinders: Standard Type (Except single acting type), Non-rotating Rod Type, Direct Mount Type [mm]

Auto switch model / Bore size	D-M9□(V) D-M9□E(V) D-M9□W(V) D-M9□A(V)		D-A9□(V)	
	A	B	A	B
20	11 (8.5)	9.5 (7)	7 (4.5)	5.5 (3)
25	10 (7.5)	10 (7.5)	6 (3.5)	6 (3.5)
32	11.5 (9)	10.5 (8)	7.5 (5)	6.5 (4)
40	17.5	15.5	13.5	11.5

∗ Adjust the auto switch after confirming the operating conditions in the actual setting.
∗ The values in ( ) are the set positions for cylinders with an air cushion, for both the non-rotating piston and direct mounting types.

Auto Switch Mounting Height [mm]

Auto switch model / Bore size	D-M9□(V) D-M9□E(V) D-M9□W(V) D-M9□A(V) D-A9□(V)
	Hs
20	24.5
25	27
32	30.5
40	34.5

Applicable Cylinder: Spring Return Type (S) [mm]

Auto switch model	Bore size	A dimensions					B
		Up to 50 st	51 to 100 st	101 to 150 st	151 to 200 st	201 to 250 st	
D-M9□(V) D-M9□E(V) D-M9□W(V) D-M9□A(V)	20	36	61	86	—	—	9.5
	25	35	60	85	—	—	10
	32	36.5	61.5	86.5	111.5	—	10.5
	40	42.5	67.5	92.5	117.5	142.5	15.5
D-A9□(V)	20	32	57	82	—	—	5.5
	25	31	56	81	—	—	6
	32	32.5	57.5	82.5	107.5	—	6.5
	40	38.5	63.5	88.5	113.5	138.5	11.5

* Adjust the auto switch after confirming the operating conditions in the actual setting.

Applicable Cylinder: Spring Extend Type (T) [mm]

Auto switch model	Bore size	A	B dimensions				
			Up to 50 st	51 to 100 st	101 to 150 st	151 to 200 st	201 to 250 st
D-M9□(V) D-M9□E(V) D-M9□W(V) D-M9□A(V)	20	11	34.5	59.5	84.5	—	—
	25	10	35	60	85	—	—
	32	11.5	35.5	60.5	85.5	110.5	—
	40	17.5	40.5	65.5	90.5	115.5	140.5
D-A9□(V)	20	7	30.5	55.5	80.5	—	—
	25	6	31	56	81	—	—
	32	7.5	31.5	56.5	81.5	106.5	—
	40	13.5	36.5	61.5	86.5	111.5	136.5

∗ Adjust the auto switch after confirming the operating conditions in the actual setting.

Minimum Stroke for Auto Switch Mounting

Applicable Cylinders: Standard Type (Except single acting type), Non-rotating Rod Type, Direct Mount Type

n: Number of auto switches [mm]

Auto switch model	Number of auto switches				
	With 1 pc.	With 2 pcs.		With n pcs.	
		Different surfaces	Same surface	Different surfaces	Same surface
D-M9□ **D-M9□E**	5	15*1	40*1	$20 + 35\frac{(n-2)}{2}$ (n = 2, 4, 6···)*3	55 + 35 (n - 2) (n = 2, 3, 4, 5···)
D-M9□W	10	15*1	40*1	$20 + 35\frac{(n-2)}{2}$ (n = 2, 4, 6···)*3	55 + 35 (n - 2) (n = 2, 3, 4, 5···)
D-M9□A	10	15*1	40*1	$25 + 35\frac{(n-2)}{2}$ (n = 2, 4, 6···)*3	60 + 35 (n - 2) (n = 2, 3, 4, 5···)
D-A9□	5	15	30*1	$15 + 35\frac{(n-2)}{2}$ (n = 2, 4, 6···)*3	50 + 35 (n - 2) (n = 2, 3, 4, 5···)
D-M9□V **D-M9□EV**	5	15*1	35	$20 + 35\frac{(n-2)}{2}$ (n = 2, 4, 6···)*3	35 + 35 (n - 2) (n = 2, 3, 4, 5···)
D-A9□V	5	15	25	$15 + 35\frac{(n-2)}{2}$ (n = 2, 4, 6···)*3	25 + 35 (n - 2) (n = 2, 3, 4, 5···)
D-M9□WV **D-M9□AV**	10	15*1	35	$20 + 35\frac{(n-2)}{2}$ (n = 2, 4, 6···)*3	35 + 35 (n - 2) (n = 2, 3, 4, 5···)

*3 When “n” is an odd number, an even number that is one larger than the odd number is to be used for the calculation.

*1 Auto switch mounting

Auto switch model	With 2 auto switches	
	Different surfaces	Same surface
	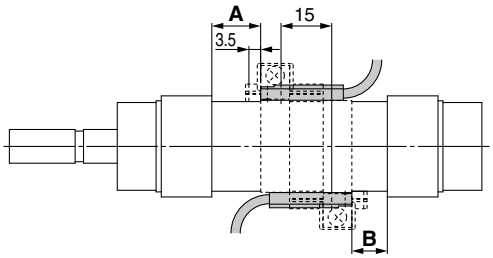 Correct auto switch mounting position is 3.5 mm from the back face of the switch holder.	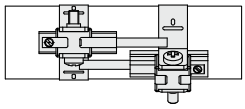 The auto switch is mounted by slightly displacing it in a direction (cylinder tube circumferential exterior) so that the auto switch and lead wire do not interfere with each other.
D-M9□(V) **D-M9□E(V)** **D-M9□W(V)**	15 to 20 mm stroke*2	40 to 55 mm stroke*2
D-M9□A(V)	15 to 25 mm stroke*2	40 to 60 mm stroke*2
D-A9□(V)	—	30 to 50 mm stroke*2

*2 Minimum stroke for auto switch mounting in types other than those mentioned in *1

Operating Range

[mm]

Auto switch model	Bore size			
	20	25	32	40
D-A9□(V)	6	6	6	6
D-M9□(V) **D-M9□E(V)** **D-M9□W(V)** **D-M9□A(V)**	3	3	4	3.5

∗ Values which include hysteresis are for reference purposes only. They are not a guarantee (assuming approximately ±30 % dispersion) and may change substantially depending on the ambient environment.

Auto Switch Mounting Brackets/Part Nos.

Auto switch model	Bore size [mm]			
	Ø 20	Ø 25	Ø 32	Ø 40
D-M9□(V) **D-M9□E(V)** **D-M9□W(V)** **D-A9□(V)**	∗1 BM5-020 (A set of a, b, c, d)	∗1 BM5-025 (A set of a, b, c, d)	∗1 BM5-032 (A set of a, b, c, d)	∗1 BM5-040 (A set of a, b, c, d)
D-M9□A(V)∗2	BM5-020S (A set of b, c, e, f)	BM5-025S (A set of b, c, e, f)	BM5-032S (A set of b, c, e, f)	BM5-040S (A set of b, c, e, f)

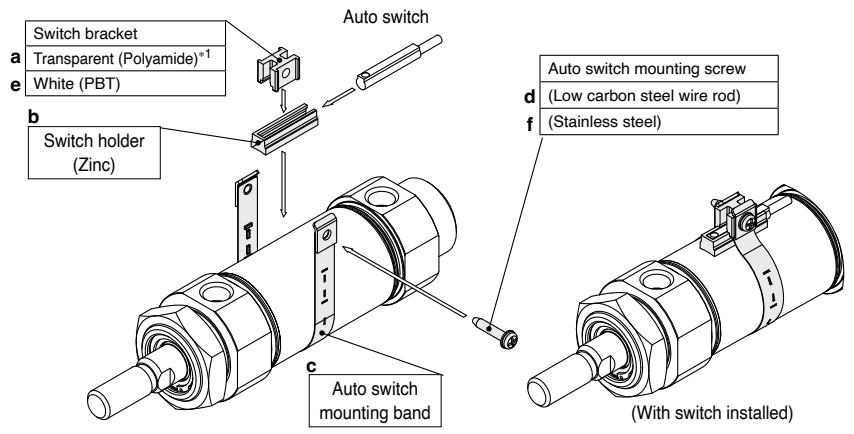

∗Band (c) is mounted so that the projected part is on the internal side (contact side with the tube).

∗1 The switching bracket (made of polyamide) is not to be used in environments where it could be exposed to chemicals (In particular, alcohol, chloroform, methylamine, hydrochloric acid, and sulphuric acid, etc.), as they may affect the performance.

∗2 When mounting a D-M9□A(V) type auto switch, if the switch bracket is mounted on the indicator light, it may damage the auto switch. Therefore, be sure to avoid mounting the switch bracket on the indicator light.

Band Mounting Brackets Set Part Nos.

Set part no.	Contents
BJ4-1	· Switch bracket (White/PBT) (e) · Switch holder (b)
BJ5-1	· Switch bracket (Transparent/Polyamide) (a) · Switch holder (b)

Auto Switch Mounting

Other than the applicable auto switches listed in "How to Order," the following auto switches are also mountable.
Refer to the **catalogue on www.smc.eu** for detailed specifications.

Type	Model	Electrical entry	Features
Solid state	D-H7A1, H7A2, H7B	Grommet (In-line)	—
	D-H7NW, H7PW, H7BW		Diagnostic indication (2-colour indicator)
	D-H7NF		With diagnostic output (2-colour indicator)
	D-H7BA		Water resistant (2-colour indicator)
	D-G5NT		With timer
	D-G39A, K39A	Terminal conduit	—
Reed	D-C73, C76, B53, B54	Grommet (In-line)	—
	D-C80, B64		Without indicator light
	D-B59W		Diagnostic indication (2-colour indicator)
	D-A33A, A34A	Terminal conduit	—
	D-A44A	DIN terminal	—

∗ With pre-wired connector is also available for solid state auto switches. For details, refer to the **catalogue on www.smc.eu**.
∗ Normally closed (NC = b contact) solid state auto switches (D-M9□E(V)) are also available. For details, refer to the **catalogue on www.smc.eu**.
∗ The D-A3□A/A44A/G39A/K39A/B5□/B64 cannot be mounted on the bore size Ø 20 and Ø 25 cylinder with an air cushion.

Auto Switch Proper Mounting Position (Detection at stroke end) and Mounting Height

Solid state auto switch

D-H7□/H7□W/H7NF/H7BA

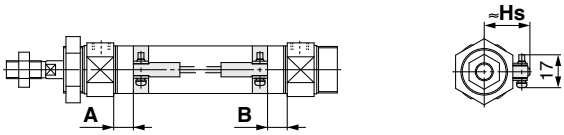

D-G5NT

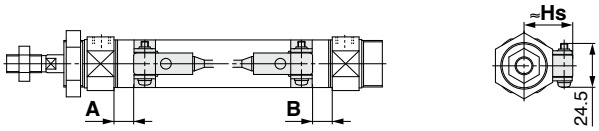

D-G39A/K39A

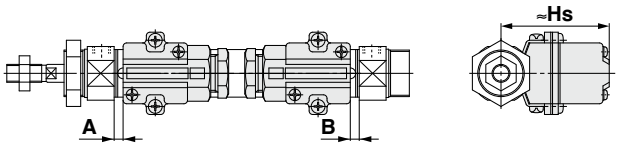

Reed auto switch

D-C7/C8

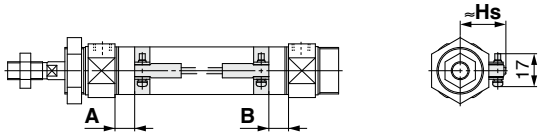

D-B5/B6/B59W

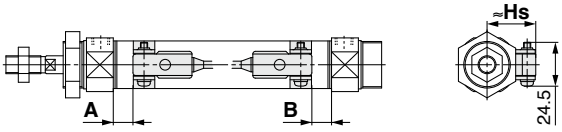

D-A33A/A34A

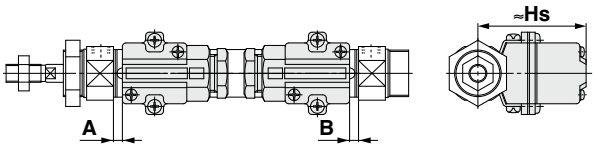

D-A44A

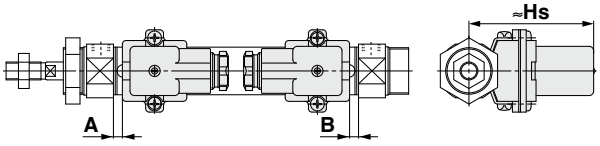

Auto Switch Proper Mounting Position (Detection at stroke end) and Mounting Height

Applicable Cylinders: Standard Type (Except single acting type), Non-rotating Rod Type, Direct Mount Type [mm]

Auto switch model / Bore size	D-G39A D-K39A D-A3□A D-A44A		D-H7□ D-H7□W D-H7BA D-H7NF		D-G5NT		D-C7□/C80		D-B5□ D-B64		D-B59W	
	A	B	A	B	A	B	A	B	A	B	A	B
20	1 (—)	0 (—)	6.5 (4)	5 (2.5)	3 (0.5)	1.5 (0)	7.5 (5)	6 (3.5)	1.5 (0)	0 (0)	4 (1.5)	3 (0.5)
25	0 (—)	0 (—)	5.5 (3)	5.5 (3)	2 (0)	2 (0)	6.5 (4)	6.5 (4)	0.5 (0)	0.5 (0)	3.5 (1)	3.5 (1)
32	1.5 (0)	0.5 (0)	7 (4.5)	6 (3.5)	3.5 (1)	2.5 (0)	8 (5.5)	7 (4.5)	2 (0)	1 (0)	5 (2.5)	4 (1.5)
40	7.5	5.5	13	11	9.5	7.5	14	12	8	6	11	9

∗ The values in ( ) are the set positions for cylinders with an air cushion, for both the non-rotating piston and direct mounting types. (-) means this switch cannot be used.
∗ Adjust the auto switch after confirming the operating conditions in the actual setting.

Auto Switch Mounting Height

[mm]

Auto switch model / Bore size	D-H7□ D-H7□W D-H7BA D-H7NF D-C7□ D-C80	D-B5□ D-B64 D-B59W D-G5NT	D-G39A D-K39A D-A3□A	D-A44A
	Hs	Hs	Hs	Hs
20	24.5	25.5	60	69.5
25	27	28	62.5	72
32	30.5	31.5	66	75.5
40	34.5	35.5	70	79.5

Applicable Cylinder: Spring Return Type (S)

[mm]

Auto switch model	Bore size	A dimensions					B
		Up to 50 st	51 to 100 st	101 to 150 st	151 to 200 st	201 to 250 st	
D-H7□ D-H7□W D-H7BA D-H7NF	20	31.5	56.5	81.5	—	—	5
	25	30.5	55.5	80.5	—	—	5.5
	32	32	57	82	107	—	6
	40	38	63	88	113	138	11
D-G5NT	20	28	53	78	—	—	1.5
	25	27	52	77	—	—	2
	32	28.5	53.5	78.5	103.5	—	2.5
	40	34.5	59.5	84.5	109.5	134.5	7.5
D-B5□ D-B64	20	26.5	51.5	76.5	—	—	0
	25	25.5	50.5	75.5	—	—	0.5
	32	27	52	77	102	—	1
	40	33	58	83	108	133	6
D-C7□ D-C80	20	32.5	57.5	82.5	—	—	6
	25	31.5	56.5	81.5	—	—	6.5
	32	33	58	83	108	—	7
	40	39	64	89	114	139	12
D-B59W	20	29	54	79	—	—	2.5
	25	28.5	53.5	78.5	—	—	3.5
	32	30	55	80	105	—	4
	40	36	61	86	111	136	9
D-G39A D-K39A D-A3□A D-A44A	20	26	51	76	—	—	0
	25	25	50	75	—	—	0
	32	26.5	51.5	76.5	101.5	—	0.5
	40	32.5	57.5	82.5	107.5	132.5	5.5

∗ Adjust the auto switch after confirming the operating conditions in the actual setting.

Applicable Cylinder: Spring Extend Type (T)

[mm]

Auto switch model	Bore size	A	B dimensions				
			Up to 50 st	51 to 100 st	101 to 150 st	151 to 200 st	201 to 250 st
D-H7□ D-H7□W D-H7BA D-H7NF	20	6.5	30	55	80	—	—
	25	5.5	30.5	55.5	80.5	—	—
	32	7	31	56	81	106	—
	40	13	36	61	86	111	136
D-G5NT	20	3	26.5	51.5	76.5	—	—
	25	2	27	52	77	—	—
	32	3.5	27.5	52.5	77.5	102.5	—
	40	9.5	32.5	57.5	81.5	107.5	132.5
D-B5□ D-B64	20	1.5	25	50	75	—	—
	25	0.5	25.5	50.5	75.5	—	—
	32	2	26	51	76	101	—
	40	8	31	56	81	106	131
D-C7□ D-C80	20	7.5	31	56	81	—	—
	25	6.5	31.5	56.5	81.5	—	—
	32	8	32	57	82	107	—
	40	14	37	62	87	112	137
D-B59W	20	4	28	53	78	—	—
	25	3.5	28.5	53.5	78.5	—	—
	32	5	29	54	79	104	—
	40	11	34	59	84	109	134
D-G39A D-K39A D-A3□A D-A44A	20	1	24.5	49.5	74.5	—	—
	25	0	25	50	75	—	—
	32	1.5	25.5	50.5	75.5	100.5	—
	40	7.5	30.5	55.5	80.5	105.5	130.5

∗ Adjust the auto switch after confirming the operating conditions in the actual setting.

Minimum Stroke for Auto Switch Mounting

Applicable Cylinders: Standard Type (Except single acting type), Non-rotating Rod Type, Direct Mount Type n: Number of auto switches [mm]

Auto switch model	Number of auto switches				
	With 1 pc.	With 2 pcs.		With n pcs.	
		Different surfaces	Same surface	Different surfaces	Same surface
D-C7□ **D-C80**	10	15	50	$15 + 45 \frac{(n-2)}{2}$ (n = 2, 4, 6···)*1	50 + 45 (n-2) (n = 2, 3, 4, 5···)
D-H7□ **D-H7□W** **D-H7BA** **D-H7NF**	10	15	60	$15 + 45 \frac{(n-2)}{2}$ (n = 2, 4, 6···)*1	60 + 45 (n-2) (n = 2, 3, 4, 5···)
D-G5NT **D-B5□/B64**	10	15	75	$15 + 50 \frac{(n-2)}{2}$ (n = 2, 4, 6···)*1	75 + 55 (n-2) (n = 2, 3, 4, 5···)
D-B59W	15	20	75	$20 + 50 \frac{(n-2)}{2}$ (n = 2, 4, 6···)*1	75 + 55 (n-2) (n = 2, 3, 4, 5···)
D-G39A **D-K39A** **D-A3□A** **D-A44A**	10	35	100	35 + 30 (n-2) (n = 2, 3, 4, 5···)	100 + 100 (n-2) (n = 2, 3, 4, 5···)

*1 When "n" is an odd number, an even number that is one larger than the odd number is to be used for the calculation.

Operating Range

[mm]

Auto switch model	Bore size			
	20	**25**	**32**	**40**
D-C7□/C80	7	8	8	8
D-B5□/B64 **D-A3□A/A44A**	8	8	9	9
D-B59W	12	12	13	13
D-H7□/H7□W/H7BA **D-G5NT/H7NF**	4	4	4.5	5
D-G39A/K39A	8	9	9	9

* Values which include hysteresis are for reference purposes only. They are not a guarantee (assuming approximately ±30 % dispersion) and may change substantially depending on the ambient environment.

Auto Switch Mounting Brackets/Part Nos.

Auto switch model	Bore size [mm]			
	Ø 20	**Ø 25**	**Ø 32**	**Ø 40**
D-H7□ **D-H7□W** **D-H7NF** **D-C7□/C80**	BM2-020A	BM2-025A	BM2-032A	BM2-040A
D-H7BA	BM2-020AS	BM2-025AS	BM2-032AS	BM2-040AS
D-B5□/B64 **D-B59W** **D-G5NT**	BA2-020	BA2-025	BA2-032	BA2-040
D-A3□A/A44A **D-G39A/K39A**	BM3-020	BM3-025	BM3-032	BM3-040

Made to Order Common Specifications

Made to Order

Please contact SMC for detailed specifications, delivery times, and prices.

■Made to Order Common Specifications

Symbol	Specifications	CM2 (Standard type)					CM2K (Not-rotating rod type)				CM2R (Direct mount type)	
		Double acting				Single acting	Double acting				Double acting	
		Single rod		Double rod		Single rod	Single rod		Double rod		Single rod	
		Rubber	Air	Rubber	Air	Rubber	Rubber	Air	Rubber	Air	Rubber	Air
-XB6	Heat-resistant cylinder (–10 to 150 °C)*1	●	●	●	●						●	●
-XB7	Cold-resistant cylinder (–40 to 70 °C)*1	●		●							●	
-XB9	Low-speed cylinder (10 to 50 mm/s)	●									●	
-XC3	Special port location	●	●	●								
-XC4□	Dust resistant cylinder	●										
-XC6□	Made of stainless steel	●	●									
-XC29	Double knuckle joint with spring pin	●	●			●	●	●				
-XC38	Vacuum specification (Rod through-hole)			●								
-XC52	Mounting nut with set screw	●	●	●	●	●	●	●	●	●		
-XC85	Grease for food processing equipment	●	●									
-X446	PTFE grease	●	●								●	

*1 The products with an auto switch are not compatible.

Made to Order Common Specifications

Please contact SMC for detailed dimensions, specifications, and delivery times.

Made to Order

1 Heat-resistant Cylinder (–10 to 150 °C)

Symbol **-XB6**

The seal material and grease used in this air cylinder have been changed so that it can be used at temperatures between –10 up to 150 °C.

Applicable Series

Series	Description	Model	Action	Note
CM2	Air cylinder	CM2-Z1	Double acting, Single rod	Excludes models with a rod boot or auto switch
		CM2W-Z1	Double acting, Double rod	Excludes models with a rod boot or auto switch
	Direct mount type	CM2R-Z1	Double acting, Single rod	Excludes models with an auto switch

How to Order

Standard model no. –XB6

Heat-resistant cylinder

- Operate without lubrication from a pneumatic system lubricator.
- In principle, it is impossible to make a heat-resistant cylinder with a built-in magnet or with an auto switch.
- Piston speed ranges from 50 to 500 mm/s.

Specifications

Ambient temperature range	–10 °C to 150 °C
Seal material	Fluororubber
Grease	Heat-resistant grease
Specifications other than the above and dimensions	Same as those of the standard type

⚠ Warning

Precautions

Be aware that smoking cigarettes, etc., after your hands have come into contact with the grease used in this cylinder can create a gas that is hazardous to humans.

2 Cold-resistant Cylinder (–40 to 70 °C)

Symbol **-XB7**

The seal material and grease used in this air cylinder have been changed so that it can be used even at lower temperature down to –40 °C.

Applicable Series

Series	Description	Model	Action	Note
CM2	Air cylinder	CM2-Z1	Double acting, Single rod	Excludes models with a rod boot, air cushion, or auto switch
		CM2W-Z1	Double acting, Double rod	Excludes models with a rod boot, air cushion, or auto switch
	Direct mount type	CM2R-Z1	Double acting, Single rod	Excludes models with an air cushion or auto switch

How to Order

Standard model no. –XB7

Cold-resistant cylinder

- Operate without lubrication from a pneumatic system lubricator.
- Use dry air which is suitable for heatless air dryer, etc., not to cause the moisture to be frozen.
- Manufacturing built-in magnet type and mounting an auto switch are impossible.
- Piston speed ranges from 50 to 500 mm/s.

Specifications

Ambient temperature range	–40 °C to 70 °C
Seal material	Low nitrile rubber
Grease	Cold-resistant grease
Auto switch	Not mountable
Dimensions	Same as those of the standard type
Specifications other than the above	Same as those of the standard type

⚠ Warning

Precautions

Be aware that smoking cigarettes, etc., after your hands have come into contact with the grease used in this cylinder can create a gas that is hazardous to humans.

3 Low-speed Cylinder (10 to 50 mm/s)

Symbol **-XB9**

Stick-slip phenomenon can be prevented, and smooth operation can be achieved even at lower driving speeds between 10 to 50 mm/s.

Applicable Series

Series	Description	Model	Action	Note
CM2	Air cylinder	CM2-Z1	Double acting, Single rod	Excludes models with an air cushion or rod boot
	Direct mount type	CM2R-Z1	Double acting, Single rod	Excludes models with an air cushion

How to Order

Standard model no. −XB9

Low-speed cylinder

∗ Operate without lubrication from a pneumatic system lubricator.

Specifications

Piston speed	10 to 50 mm/s
Dimensions	Same as those of the standard type
Specifications other than the above	Same as those of the standard type

⚠ Warning

Precautions

Be aware that smoking cigarettes, etc., after your hands have come into contact with the grease used in this cylinder can create a gas that is hazardous to humans.

4 Special Port Location

Symbol **-XC3**

The locations of the connection port of the rod/head cover and the location of the cushion needle are different than those of the standard type.

Applicable Series

Series	Description	Model	Action	Note
CM2	Air cylinder	CM2-Z1	Double acting, Single rod	
		CM2W-Z1	Double acting, Double rod	Excludes models with an air cushion

How to Order

Standard model no. −XC3 A B

Special port location

Head port location viewed from the rod side

Rod port location viewed from the rod side

∗ For port locations, refer to the diagrams below and select either A, B, C, or D.

Specifications: Same as those of the standard type

Port Locations

Series	Corresponding symbol of mounting bracket (Positional relationships)
CM2	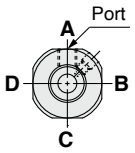 ∗ Viewed from the rod side, the ports are rendered A, B, C, and D, in the clockwise direction. Positional relationship between clevis and port 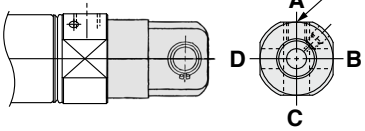 ∗ Viewed from the rod side, with the clevis positioned as shown in the diagram, the ports are rendered A, B, C, and D, in the clockwise direction.
	1. Positional relationships between port and cushion needle cannot be changed.

Symbol
-XC4□

5 Dust Resistant Cylinder

Up to 6 times more durable in dusty environments

Applicable powder particle size: 20 to 100 μm
Suitable for environments with ceramic powder, toner powder, paper powder, and metallic powder
∗ Excludes weld spatter

Air Cylinder **CM2-XC4□**

High Durability Series

High Durability Series is the series name for the "special specification" that offers superior durability and environmental resistance compared to standard products.

Can be selected according to the application

A Lube-retainer (stable lubrication function) and a heavy-duty scraper can be mounted on the piston rod.

Specifications	Applicable powder particle size	Structure	Durability
With 2 Lube-retainers **XC4A**	20 to 50 μm	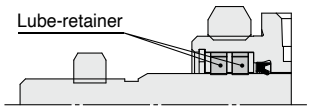	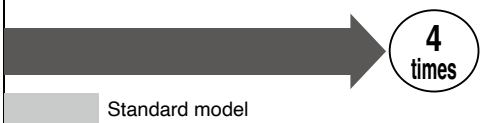
With heavy-duty scraper + Lube-retainer **XC4B**	30 to 100 μm	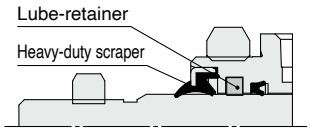	
With heavy-duty scraper **XC4C**	50 to 100 μm	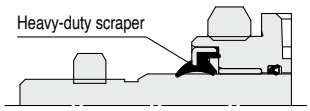	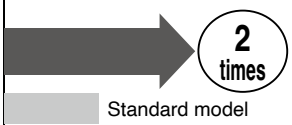

Applicable Series

Series	Description	Model	Action	Note
CM2	Air cylinder	CM2-Z1	Double acting, Single rod	Excludes models with an air cushion or rod boot

Dust Resistant Specifications

XC4A	With 2 Lube-retainers (Applicable powder particle size: 20 to 50 □m)	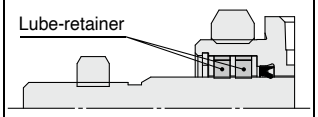
XC4B	With heavy-duty scraper + Lube-retainer (Applicable powder particle size: 30 to 100 □m)	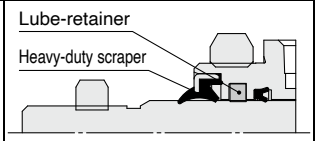
XC4C	With heavy-duty scraper (Applicable powder particle size: 50 to 100 μm)	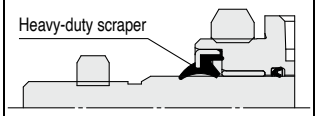

How to Order

Standard model no. **−XC4B**

● **Dust resistant specification**

Specifications

Min. operating pressure	**XC4A**	0.1 MPa
	XC4B	
	XC4C	0.05 MPa
Cushion		Rubber bumper Air cushion (XC4C only)

Specifications other than the above	Same as those of the standard type

⚠ Caution

● The Lube-retainer, heavy-duty scraper, and rod seal cannot be replaced.

Dimensions (Dimensions other than those shown below are the same as those of the standard model.)

CM2-XC4B/4C

∗ The "XC4A" has the same dimensions as the standard model.
∗ The male rod end type has the same dimensions as the standard model.

Female rod end

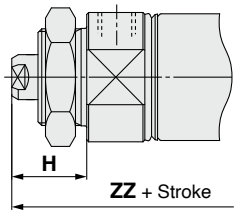

[mm]

Bore size	H	ZZ
20	24	99
25	24	99
32	24	101
40	26	130

6 Made of Stainless Steel

Symbol
-XC6□

Suitable for environments where rust and corrosion are likely to be generated

Applicable Series

Series	Description	Model	Action	Note
CM2	Air cylinder	CM2-Z1	Double acting, Single rod	

How to Order/CM2-Z1

CDM2 B 20 □ – 50 A □ Z1 – W – M9BW S – XC6A

❶ ❷ ❸ ❹ ❺ ❻ ❼ ❽ ❾ ❿

With auto switch (Built-in magnet)

❶ Mounting

B	Basic (Double-side bossed)
L	Axial foot
F	Rod flange
G	Head flange
C	Single clevis*1
D	Double clevis*1
U	Rod trunnion*1
T	Head trunnion*1
E	Integrated clevis*1
V	Integrated clevis (90°)*1
BZ	Boss-cut/Basic
FZ	Boss-cut/Rod flange
UZ	Boss-cut/Rod trunnion*1

*1 Only applicable to the XC6A

❷ Bore size

20	20 mm
25	25 mm
32	32 mm
40	40 mm

❸ Port thread type

—	Rc
TN	NPT
TF	G

❹ Stroke

Refer to Table 1 for applicable strokes.

❺ Cushion

—	Rubber bumper
A	Air cushion

❻ Rod end thread

—	Male rod end
F	Female rod end

❼ Rod end bracket

—	No bracket
V	Single knuckle joint
W	Double knuckle joint

* No bracket is provided for the female rod end.

❽ Auto switch

For auto switch models, refer to the table of applicable auto switches.

❾ Number of auto switches

—	2
S	1
n	n

❿ Made to order

XC6A	Stainless steel rod + Stainless steel end nut
XC6B	Stainless steel rod + Stainless steel end nut + Stainless steel mounting nut + Retaining ring + Bracket

Table 1. Applicable Strokes

Bore size [mm]	Standard stroke [mm]	Max. manufacturable stroke [mm]
20	25, 50, 75, 100, 125, 150, 200, 250, 300	1000
25		
32		
40		

* The manufacturing of intermediate strokes in 1 mm increments is possible.

Specifications

Material		Stainless steel
Changed parts	**XC6A**	Piston rod, Rod end nut
	XC6B	Piston rod, Rod end nut, Retaining ring, Mounting nut Bracket (Refer to the mounting brackets in the table below.)
Specifications other than the above and dimensions		Same as those of the standard type

* The pivot bracket must be ordered separately.
* Rod end is not affected by this option and should be managed separately.
* The materials of the cushion needle are the same as standard. It is made from iron and nickel.

Construction

XC6A, XC6B construction

The material of the components below will be changed from standard and those not mentioned will remain the same as standard.

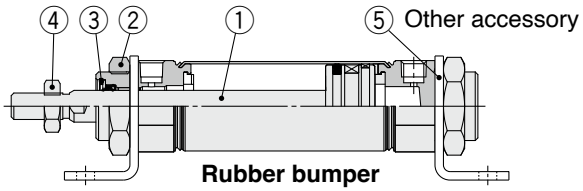

No.	1	2	3	4	5
Description	**Piston rod**	**Mounting nut**	**Retaining ring**	**Rod end nut**	**Bracket** (Refer to the mounting brackets below.)
XC6A	Stainless steel	No change (Steel)	No change (Steel)	Stainless steel	No change (Steel)
XC6B	Stainless steel	Stainless steel	Stainless steel	Stainless steel	Stainless steel

Mounting Brackets/Part Nos.

Mounting bracket	Min. order quantity	Bore size [mm]				Contents (for min. order quantity)
		20	**25**	**32**	**40**	
Foot*1	2	CM-L020B-XB12	CM-L032B-XB12		CM-L040B-XB12	2 foot brackets, 1 mounting nut
Foot	1	CM-L020BSUS	CM-L032BSUS		CM-L040BSUS	1 foot bracket*2
Flange	1	CM-F020BSUS	CM-F032BSUS		CM-F040BSUS	1 flange*2
Rod end nut	1	NT-02SUS	NT-03SUS		NT-04SUS	1 rod end nut
Mounting nut	1	SN-020BSUS	SN-032BSUS		SN-040BSUS	1 mounting nut
Single knuckle joint	1	I-020BSUS	I-032BSUS		I-040BSUS	1 single knuckle joint
Double knuckle joint	1	Y-020BSUS	Y-032BSUS		Y-040BSUS	1 double knuckle joint, 1 clevis pin, 2 retaining rings (split pins)

*1 Order two foot brackets per cylinder.
*2 The mounting nut is not included. Order it separately as required.

7 Double Knuckle Joint with Spring Pin

Symbol **-XC29**

To prevent loosening of the double knuckle joint

Applicable Series

Series	Description	Model	Action	Note
CM2	Air cylinder	CM2-Z1	Double acting, Single rod	Excludes models with a rod end bracket
			Single acting (Spring return/extend)	Excludes models with a rod end bracket
	Non-rotating rod type	CM2K-Z1	Double acting, Single rod	Excludes models with a rod end bracket

How to Order

Standard model no. – **XC29**

Double knuckle joint with spring pin

Specifications: Same as those of the standard type

Dimensions (For mounting bracket, pin is shipped together.) (* Dimensions other than those shown below are the same as those of the standard model.)

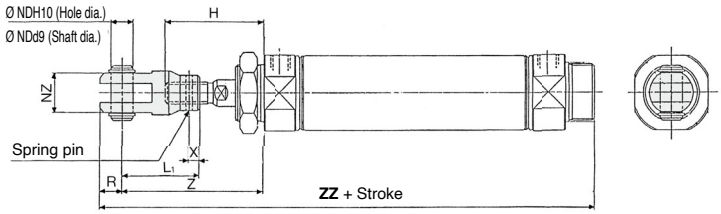

[mm]

Bore size [mm]	H	L_1	ND_{H10}	NZ	R	X	Z	ZZ	Spring pin
20	41	36	$9^{+0.058}_{-0}$	18	10	5	61	146	Ø 3 x 16 L
25	45	38	$9^{+0.058}_{0}$	18	10	5	65	150	Ø 3 x 16 L
32	45	38	$9^{+0.058}_{0}$	18	10	5	65	152	Ø 3 x 16 L
40	50	55	$12^{+0.070}_{0}$	38	13	11	83	200	Ø 4 x 24 L

8 Vacuum Specification (Rod through-hole)

Symbol **-XC38**

Through-hole of hollow rod can be used as the passage of vacuum air.

Applicable Series

Series	Description	Model	Action	Note
CM2	Air cylinder	CM2W-Z1	Double acting, Double rod	Excludes models with an air cushion

How to Order

Standard model no. – **XC38**

Vacuum specification (Rod through-hole)

Construction/Dimensions (Dimensions other than those shown below are the same as those of the standard model.)

CM2W Series

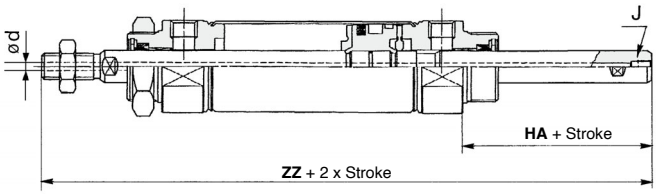

Specifications: Same as those of the standard type (CM2W)

Bore size [mm]	d	J	HA	ZZ
20	3	M5 x 0.8	32	135
25	3	M5 x 0.8	32	139
32	3	M5 x 0.8	32	141
40	4	Rc1/8	36	174

9 Mounting Nut with Set Screw

Symbol **-XC52**

In order to prevent the mounting nut from being loosen, set screw should be tighten from the two directions to fix the mounting nut.

Applicable Series

Series	Description	Model	Action	Note
CM2	Air cylinder	CM2-Z1	Double acting, Single rod	
			Single acting (Spring return/extend)	
		CM2W-Z1	Double acting, Double rod	
	Non-rotating rod type	CM2K-Z1	Double acting, Single rod	
		CM2KW-Z1	Double acting, Double rod	

How to Order

Standard model no. **−XC52**

Mounting nut with set screw

Dimensions (Dimensions other than those shown below are the same as those of the standard model.)

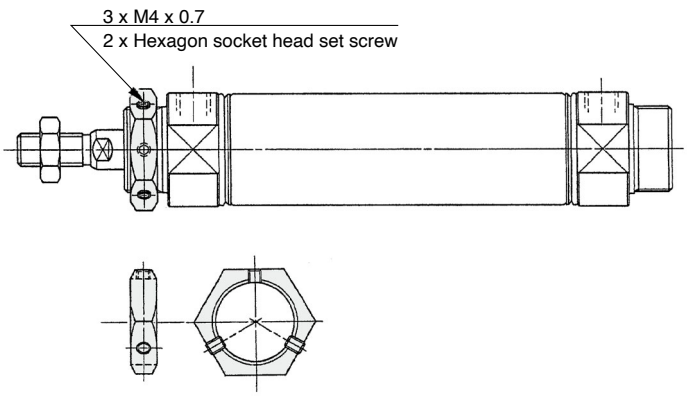

Specifications: Same as those of the standard type

10 Grease for Food Processing Equipment

Symbol **-XC85**

Food grade grease (certified by NSF-H1) is used as lubricant.

Applicable Series

Series	Description	Model	Action	Note
CM2	Air cylinder	CM2-Z1	Double acting, Single rod	

How to Order

Standard model no. **−XC85**

Grease for food processing equipment

Specifications

Seal material	Nitrile rubber
Grease	Grease for food processing equipment
Auto switch	Mountable
Dimensions	Same as those of the standard type
Specifications other than the above	Same as those of the standard type

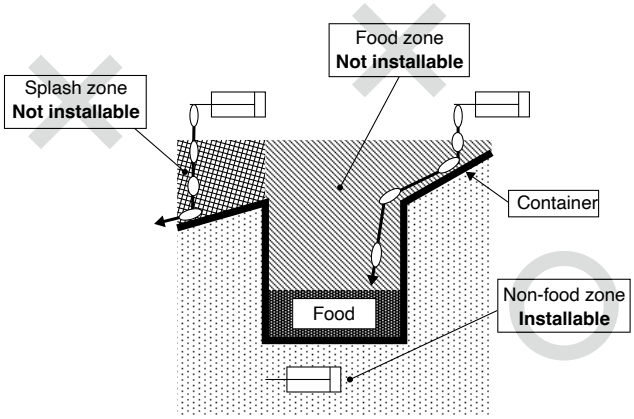

⚠ Warning

Precautions

Be aware that smoking cigarettes, etc., after your hands have come into contact with the grease used in this cylinder can create a gas that is hazardous to humans.

<Not installable>
Food zone……An environment where food which will be sold as merchandize, directly touches the cylinder's components
Splash zone……An environment where food which will not be sold as merchandize, directly touches the cylinder's components
<Installable>
Non-food zone……An environment where there is no contact with food

- Avoid using this product in the food zone. (Refer to the figure above.)
- When the product is used in an area of liquid splash, or a water resistant function is required for the product.
- Operate without lubrication from a pneumatic system lubricator.
- Use the following grease pack for the maintenance work.
  GR-H-010 (Grease: 10 g)

11 PTFE Grease

Symbol
-X446

Applicable Series

Series	Description	Model	Action	Note
CM2	Air cylinder	CM2-Z1	Double acting, Single rod	
	Direct mount type	CM2R	Double acting, Single rod	Rubber bumper only

How to Order

Standard model no. – **X446**

PTFE grease

Specifications: Same as those of the standard type

Dimensions: Same as those of the standard type

∗ When grease is necessary for maintenance, a grease pack is available. Please order it separately.
GR-F-005 (Grease: 5 g)

⚠ Warning

Precautions

Be aware that smoking cigarettes, etc., after your hands have come into contact with the grease used in this cylinder can create a gas that is hazardous to humans.

⚠ Safety Instructions

These safety instructions are intended to prevent hazardous situations and/or equipment damage. These instructions indicate the level of potential hazard with the labels of **"Caution," "Warning"** or **"Danger."** They are all important notes for safety and must be followed in addition to International Standards (ISO/IEC) [1], and other safety regulations.

⚠ **Danger:**	**Danger** indicates a hazard with a high level of risk which, if not avoided, will result in death or serious injury.
⚠ **Warning:**	**Warning** indicates a hazard with a medium level of risk which, if not avoided, could result in death or serious injury.
⚠ **Caution:**	**Caution** indicates a hazard with a low level of risk which, if not avoided, could result in minor or moderate injury.

1) ISO 4414: Pneumatic fluid power – General rules and safety requirements for systems and their components.
ISO 4413: Hydraulic fluid power – General rules and safety requirements for systems and their components.
IEC 60204-1: Safety of machinery – Electrical equipment of machines. (Part 1: General requirements)
ISO 10218-1: Robots and robotic devices - Safety requirements for industrial robots - Part 1: Robots.
etc.

⚠ Warning

1. **The compatibility of the product is the responsibility of the person who designs the equipment or decides its specifications.**
   Since the product specified here is used under various operating conditions, its compatibility with specific equipment must be decided by the person who designs the equipment or decides its specifications based on necessary analysis and test results. The expected performance and safety assurance of the equipment will be the responsibility of the person who has determined its compatibility with the product. This person should also continuously review all specifications of the product referring to its latest catalogue information, with a view to giving due consideration to any possibility of equipment failure when configuring the equipment.

2. **Only personnel with appropriate training should operate machinery and equipment.**
   The product specified here may become unsafe if handled incorrectly. The assembly, operation and maintenance of machines or equipment including our products must be performed by an operator who is appropriately trained and experienced.

3. **Do not service or attempt to remove product and machinery/ equipment until safety is confirmed.**
   1. The inspection and maintenance of machinery/equipment should only be performed after measures to prevent falling or runaway of the driven objects have been confirmed.
   2. When the product is to be removed, confirm that the safety measures as mentioned above are implemented and the power from any appropriate source is cut, and read and understand the specific product precautions of all relevant products carefully.
   3. Before machinery/equipment is restarted, take measures to prevent unexpected operation and malfunction.

4. **Our products cannot be used beyond their specifications.**
   Our products are not developed, designed, and manufactured to be used under the following conditions or environments.
   Use under such conditions or environments is not covered.
   1. Conditions and environments outside of the given specifications, or use outdoors or in a place exposed to direct sunlight.
   2. Use for nuclear power, railways, aviation, space equipment, ships, vehicles, military application, equipment affecting human life, body, and property, fuel equipment, entertainment equipment, emergency shut-off circuits, press clutches, brake circuits, safety equipment, etc., and use for applications that do not conform to standard specifications such as catalogues and operation manuals.
   3. Use for interlock circuits, except for use with double interlock such as installing a mechanical protection function in case of failure. Please periodically inspect the product to confirm that the product is operating properly.

⚠ Caution

We develop, design, and manufacture our products to be used for automatic control equipment, and provide them for peaceful use in manufacturing industries.
Use in non-manufacturing industries is not covered.
Products we manufacture and sell cannot be used for the purpose of transactions or certification specified in the Measurement Act.
The new Measurement Act prohibits use of any unit other than SI units in Japan.

Limited warranty and Disclaimer/Compliance Requirements

The product used is subject to the following "Limited warranty and Disclaimer" and "Compliance Requirements".Read and accept them before using the product.

Limited warranty and Disclaimer

1. The warranty period of the product is 1 year in service or 1.5 years after the product is delivered, whichever is first. [2] Also, the product may have specified durability, running distance or replacement parts. Please consult your nearest sales branch.
2. For any failure or damage reported within the warranty period which is clearly our responsibility, a replacement product or necessary parts will be provided. This limited warranty applies only to our product independently, and not to any other damage incurred due to the failure of the product.
3. Prior to using SMC products, please read and understand the warranty terms and disclaimers noted in the specified catalogue for the particular products.

2) Vacuum pads are excluded from this 1 year warranty.
A vacuum pad is a consumable part, so it is warranted for a year after it is delivered. Also, even within the warranty period, the wear of a product due to the use of the vacuum pad or failure due to the deterioration of rubber material are not covered by the limited warranty.

Compliance Requirements

1. The use of SMC products with production equipment for the manufacture of weapons of mass destruction (WMD) or any other weapon is strictly prohibited.
2. The exports of SMC products or technology from one country to another are governed by the relevant security laws and regulations of the countries involved in the transaction. Prior to the shipment of a SMC product to another country, assure that all local rules governing that export are known and followed.

Revision History

Edition B	- Standard type products (double rod type and single acting type) have been added. - A non-rotating rod type has been added. - A direct mount type has been added. - Made-to-order options have been added: · Heat-resistant cylinder (-XB6), Special port location (-XC3), Made of stainless steel (-XC6□), Dust resistant cylinder (-XC4□), etc. - The number of pages has been increased from 32 to 76	DO

SMC Corporation (Europe)

Austria	+43 (0)2262622800	www.smc.at	office.at@smc.com
Belgium	+32 (0)33551464	www.smc.be	info@smc.be
Bulgaria	+359 (0)2807670	www.smc.bg	sales.bg@smc.com
Croatia	+385 (0)13707288	www.smc.hr	sales.hr@smc.com
Czech Republic	+420 541424611	www.smc.cz	office.at@smc.com
Denmark	+45 70252900	www.smcdk.com	smc.dk@smc.com
Estonia	+372 651 0370	www.smcee.ee	info.ee@smc.com
Finland	+358 207513513	www.smc.fi	smc.fi@smc.com
France	+33 (0)164761000	www.smc-france.fr	supportclient.fr@smc.com
Germany	+49 (0)61034020	www.smc.de	info.de@smc.com
Greece	+30 210 2717265	www.smchellas.gr	sales@smchellas.gr
Hungary	+36 23513000	www.smc.hu	office.hu@smc.com
Ireland	+353 (0)14039000	www.smcautomation.ie	technical.ie@smc.com
Italy	+39 03990691	www.smcitalia.it	mailbox.it@smc.com
Latvia	+371 67817700	www.smc.lv	info.lv@smc.com
Lithuania	+370 5 2308118	www.smclt.lt	info.lt@smc.com
Netherlands	+31 (0)205318888	www.smc.nl	info@smc.nl
Norway	+47 67129020	www.smc-norge.no	post.no@smc.com
Poland	+48 22 344 40 00	www.smc.pl	office.pl@smc.com
Portugal	+351 214724500	www.smc.eu	apoiocliente.pt@smc.com
Romania	+40 213205111	www.smcromania.ro	office.ro@smc.com
Russia	+7 (812)3036600	www.smc.eu	sales@smcru.com
Slovakia	+421 (0)413213212	www.smc.sk	sales.sk@smc.com
Slovenia	+386 (0)73885412	www.smc.si	office.si@smc.com
Spain	+34 945184100	www.smc.eu	post.es@smc.com
Sweden	+46 (0)86031240	www.smc.nu	order.se@smc.com
Switzerland	+41 (0)523963131	www.smc.ch	helpcenter.ch@smc.com
Turkey	+90 212 489 0 440	www.smcturkey.com.tr	satis@smcturkey.com.tr
UK	+44 (0)845 121 5122	www.smc.uk	sales.gb@smc.com
South Africa	+27 10 900 1233	www.smcza.co.za	Sales.za@smc.com

Printing DO 00 Printed in Spain

Specifications are subject to change without prior notice and any obligation on the part of the manufacturer