5 Port Solenoid Valve

Connector Type Manifold

Metal Seal / Rubber Seal

VQC1000/2000 Series

CAT.EUS11-101Aa-UK

5 Port Solenoid Valve

Metal Seal / Rubber Seal

VQC4000/5000 Series

CAT.EUS11-108A-UK

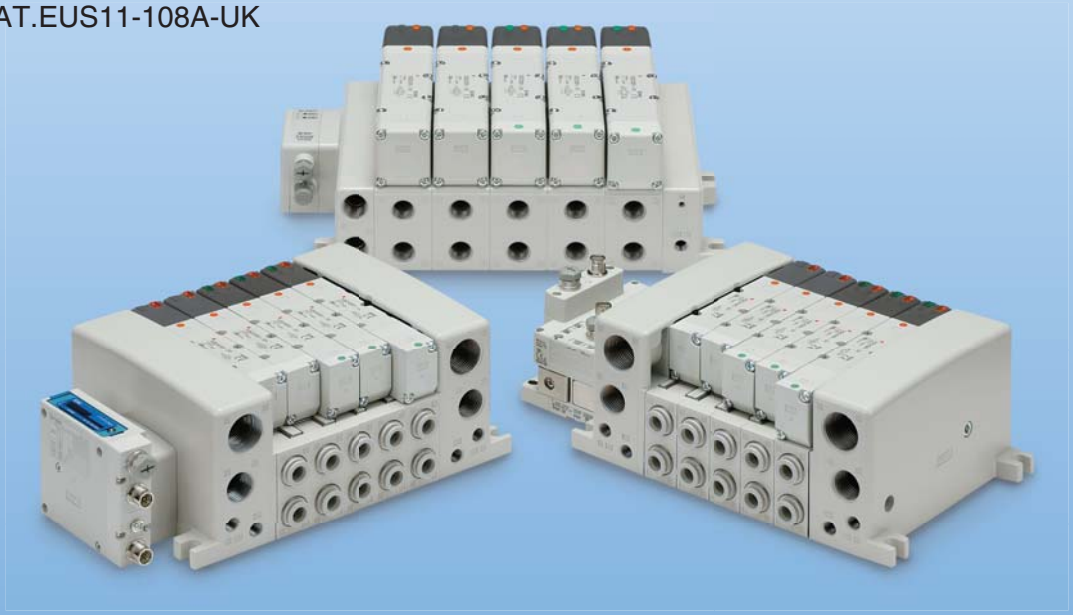

SMC

EMC-VQC1-2-4-5000-UK

5 Port Solenoid Valve

Connector Type Manifold

Metal Seal / Rubber Seal

IP67 enclosure compatible

RoHS compliant

Power saving

Standard: 0.4 W

(Reduced by 60% compared to existing model)

High-pressure (1 MPa, Metal seal): 0.95 W

Series VQC1000/2000

SMC

CAT.EUS11-101Aaa-UK

Connector Type Manifold

Series VQC1000/2000

Power saving

Standard: **0.4** W (Reduced by **60**% compared to existing model)

High-pressure (1 MPa, Metal seal): **0.95** W

IP67 enclosure compatible Dust-tight, Immersion-proof

(Based on IEC60529) (S/T/L/M kit)

Accommodates gateway-type serial wiring.

- Gateway unit types include DeviceNet™, PROFIBUS DP and EtherNet/IP™.
- Because just one gateway unit controls up to 4 branch lines, it offers much more freedom in choosing valve mounting locations in comparison with other serial units.
- Manifolds and input blocks can be mounted near the actuator, allowing for use of short air piping or electric wiring.
- The package wiring with connector cable reduces the potential for incorrect wiring and improves wiring efficiency.
- A single cable from the gateway provides both signal and power to each branch, thus eliminating the need for separate power connections for each manifold valve and input block.
- The input block also employs a multi-pin connector so that the number of stations can be changed easily, as with the manifold.

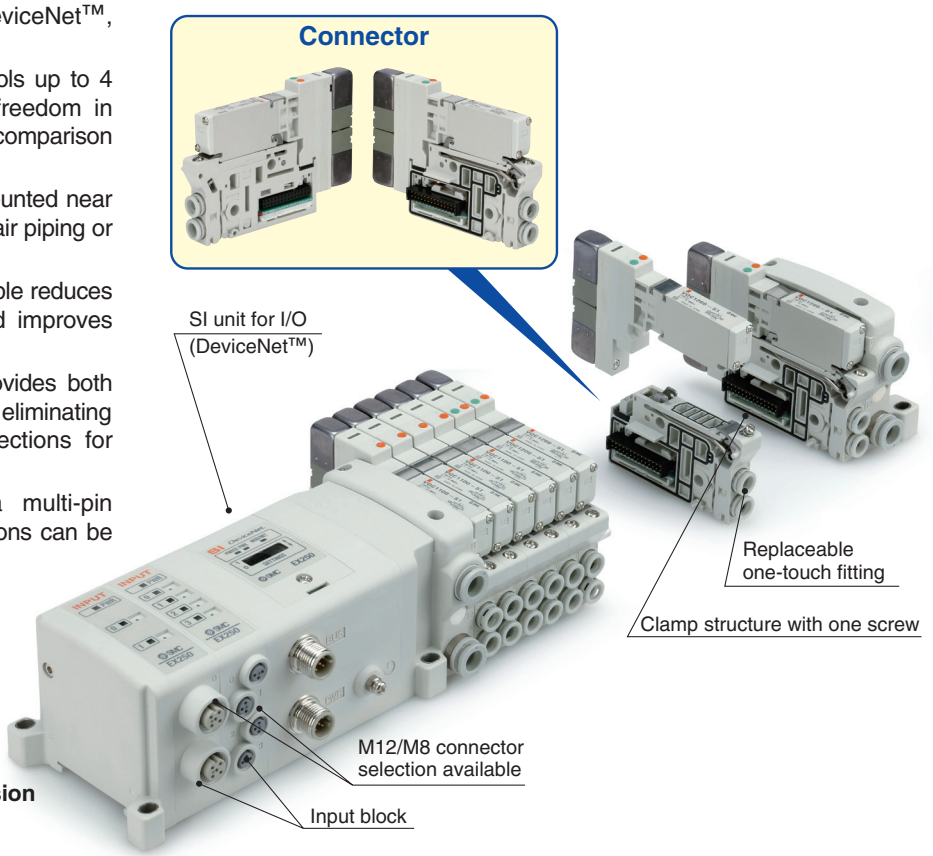

Applicable to EX600 (Input/Output) serial transmission system (Fieldbus system)

- Available for DeviceNet™, PROFIBUS DP, CC-Link, EtherNet/IP™ and PROFINET fieldbus protocols.
- **Max. 9 units** Note) **can be connected in any order.**
  The unit to connect input device such as an auto switch, pressure switch and flow switch, and the unit to connect output device such as a solenoid valve, relay and indicator light can be connected in any order.
  Note) Except SI unit
- **Analogue Input/Output Unit can be connected with analogue devices.**
  As well as a Digital (switch) Input/Output Unit, a unit applicable to analogue signal is provided, and can be connected with various devices for control.
- **Self-diagnosis function**
  It is possible to ascertain the maintenance period and identify the parts that require maintenance, by an input (sensor) open circuit detecting function and an input/output signal of ON/OFF counter function. Also, the monitoring of input/output signal and the setting of parameters can be performed with a Handheld Terminal.

Compact and high flow

Series	Manifold pitch (mm)	Flow-rate characteristics Note)						Applicable cylinder bore size (mm)
		Metal seal			Rubber seal			
		C [dm³/(s·bar)]	b	Cv	C [dm³/(s·bar)]	b	Cv	
VQC1000	10.5	0.72	0.25	0.18	1.0	0.30	0.25	Up to ø50
VQC2000	16	2.6	0.15	0.60	3.2	0.30	0.80	Up to ø80

Note) Flow-rate characteristics: 2-position single, 4/2 → 5/3 (A/B → R1/R2)

Connector entry direction can be changed with a single push. (F/P kit)

The connector entry direction can be changed from the top to the side by simply pressing the manual release button.
It is not necessary to use the manual release button when switching from the side to the top.

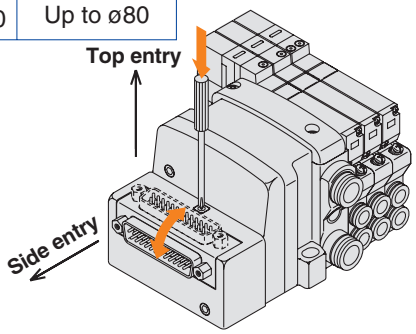

A wide variety of prepackaged wiring configurations

S kit (Serial transmission)

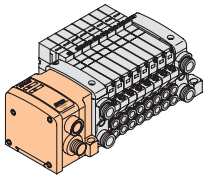

IP67 enclosure compatible

F kit (D-sub connector)

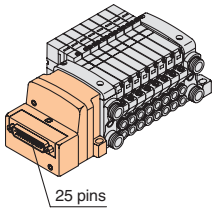

P kit (Flat ribbon cable)

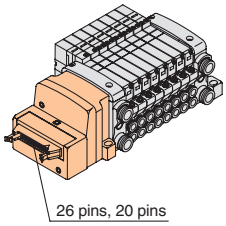

T kit (Terminal block box)

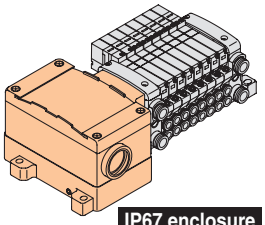

IP67 enclosure compatible

L kit (Lead wire)

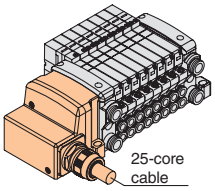

IP67 enclosure compatible

M kit (Circular connector)

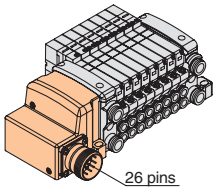

IP67 enclosure compatible

- Our six standard wiring packages bring a world of ease to wiring and maintenance work, while the protective enclosures of four of them conform to IP67 standards.
- The S kit is compatible with a combined I/O unit. (Not applicable to Gateway unit)

Connector type manifold

- The use of multi-pin connectors to replace wiring inside manifold blocks provides flexibility when adding stations or changing manifold configuration.
- All kits use multi-pin connectors, so switching from the F kit (D-sub connector) to the S kit (serial transmission) can be done simply by changing the kit section.

(Refer to the connector wiring diagram.)
Printed circuit board patterns between connectors are shifted at every station. This allows for viable connections to take place without necessarily specifying whether the manifold station is double, single, or mixed wiring.

Connector wiring diagram (Mixed wiring)

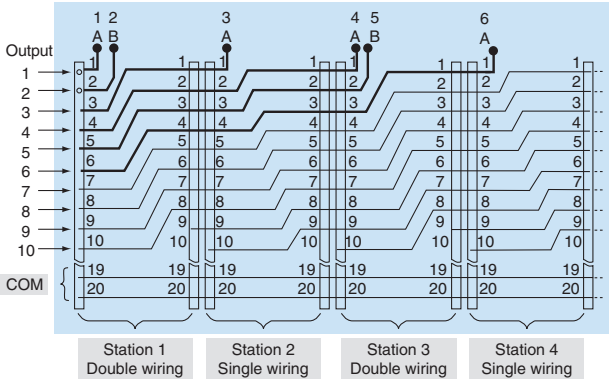

Dual 3-port valves, 4 positions

VQC1000/2000 (Rubber seal only)

- Two 3-port valves built into one body
- The 3-port valves on the A and B sides can operate independently.
- When used as 3-port valves, only half the number of stations is required.
- Can also be used as a 4-position, 5-port type valve.

Exhaust centre : **VQC1A01**
: **VQC2A01**
Pressure centre : **VQC1B01**
: **VQC2B01**

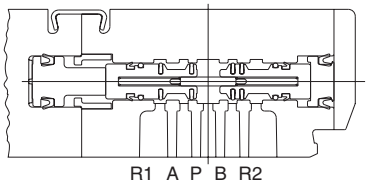

Model	A side	B side	JIS symbol
VQC1A01 **VQC2A01**	N.C. valve	N.C. valve	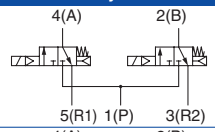
VQC1B01 **VQC2B01**	N.O. valve	N.O. valve	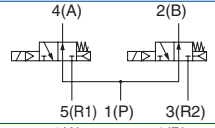
VQC1C01 **VQC2C01**	N.C. valve	N.O. valve	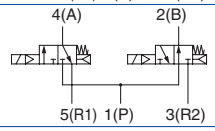

Series VQC/Base Mounted: Variations

			Sonic conductance C [dm³/(s·bar)] (CYL → EXH 4/2 → 5/3)		Applicable cylinder bore size	S kit				
						Serial transmission				
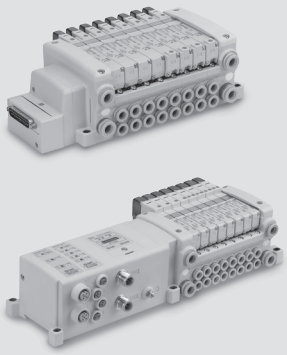			Single/Double	3-position (Closed center)		**Gateway application** Compatible network • DeviceNet™ • PROFIBUS DP • EtherNet/IP™ **Decentralized Serial Wiring** Gateway application requires a gateway unit and communication cable separately. Please contact SMC for details. 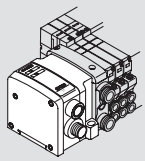 Serial unit: **EX500** IP67 compliant	Compatible network • DeviceNet™ • PROFIBUS DP • CC-Link • EtherNet/IP™ • EtherCAT • PROFINET **I/O** 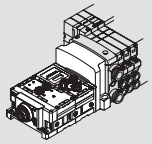 Serial unit (Fieldbus system): **EX600** IP67 compliant	Compatible network • DeviceNet™ • PROFIBUS DP • CC-Link • AS-Interface • CANopen • EtherNet/IP™ **I/O** 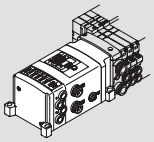 Serial unit: **EX250** IP67 compliant	Compatible network • DeviceNet™ • PROFIBUS DP • CC-Link • EtherCAT • PROFINET • EtherNet/IP™ • EtherNet POWERLINK **Output** 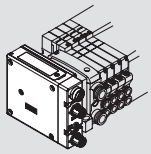 Serial unit: **EX260** IP67 compliant	Compatible network • CC-Link **Output** 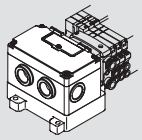 Serial unit: **EX126** IP67 compliant	
Series VQC1000 P. 5	Metal seal	VQC1□00	0.72	0.72	Up to ø50	●	●	●	●	●
	Rubber seal	VQC1□01	1.0	0.65						
Series VQC2000 P. 11	Metal seal	VQC2□00	2.6	2.0	Up to ø80	●	●	●	●	●
	Rubber seal	VQC2□01	3.2	2.2						

	F kit	P kit	T kit	L kit	M kit	Port size	
	D-sub connector	Flat ribbon cable	Terminal block box	Electrical entry	Circular connector		
	D-sub connector (Conforming to MIL D-sub connector) 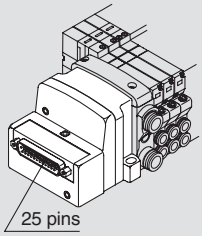 	**Flat ribbon cable** (Conforming to MIL flat ribbon cable connector) 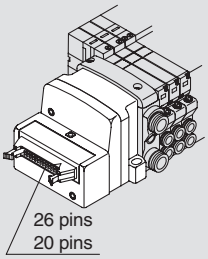 	**Terminal block box** **(Terminal block)** (Terminal block is compactly arranged on one side.) 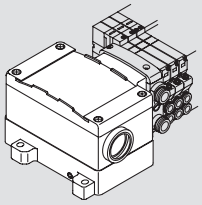 **IP67 compliant**	**Lead wire** (IP67 enclosure with use of multiple wire cable with sheath and waterproof connector) 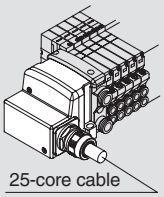 **IP67 compliant**	**Circular connector** (IP67 enclosure with use of waterproof circular connector) 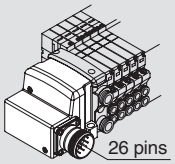 **IP67 compliant**	**SUP EXH port** **1, 3 (P, R)**	**Cylinder port** **2, 4 (A, B)**
	●	●	●	●	●	**C8 (ø8)** **N9 (ø5/16")**	**C3 (ø3.2)** **C4 (ø4)** **C6 (ø6)** **M5 (M5 thread)** **N1 (ø1/8")** **N3 (ø5/32")** **N7 (ø1/4")**
	●	●	●	●	●	**C10 (ø10)** **N11 (ø3/8")** **In case of branch type** **C12 (ø12)** **N13 (ø1/2")**	**C4 (ø4)** **C6 (ø6)** **C8 (ø8)** **N3 (ø5/32")** **N7 (ø1/4")** **N9 (ø5/16")**

Cylinder Speed Chart

This chart is provided as guidelines only.
For performance under various conditions, use SMC's Model Selection Program before making a judgment.

Series	Average speed (mm/s)	Bore size											
		Series CJ2 Pressure 0.5 MPa Load factor 50% Stroke 60 mm			Series CM2 Pressure 0.5 MPa Load factor 50% Stroke 300 mm				Series MB, CA2 Pressure 0.5 MPa Load factor 50% Stroke 500 mm				
		ø6	ø10	ø16	ø20	ø25	ø32	ø40	ø40	ø50	ø63	ø80	ø100
VQC1101	800												
	700												
	600												
	500												
	400												
	300												
	200												
	100												
	0												
VQC2101	800												
	700												
	600												
	500												
	400												
	300												
	200												
	100												
	0												

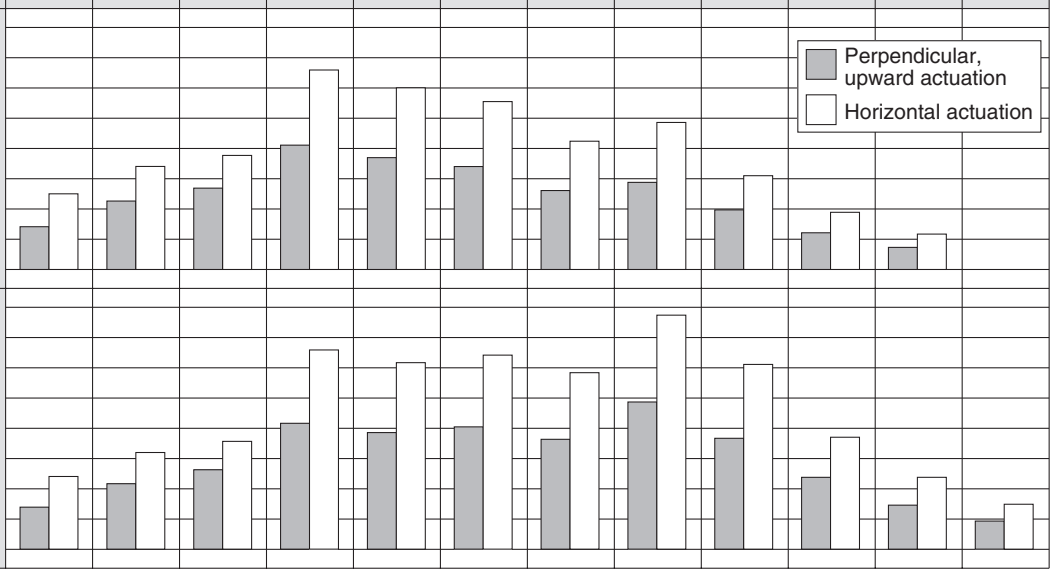

Note 1) It is when the cylinder is extending that is meter-out controlled by speed controller which is directly connected with cylinder, and its needle valve with being fully open.
Note 1) The average velocity of the cylinder is what the stroke is divided by the total stroke time.
Note 1) Load factor: ((Load mass x 9.8)/Theoretical force) x 100%

Conditions

Series	Conditions	Series CJ2	Series CM2	Series MB, CA2
VQC1101	Tube x Length	T0604 (O.D. ø6/I.D. ø4) x 1 m		
	Speed controller	AS3001F-06		
	Silencer	AN200-KM8		
VQC2101	Tube x Length	T0806 (O.D. ø8/I.D. ø6) x 1 m		
	Speed controller	AS3001F-08		
	Silencer	AN200-KM10		

INDEX

Features ..... Features 1
Variations ..... P. 1
Cylinder Speed Chart ..... P. 3
VQC1000 How to Order, Manifold Options ..... P. 5
VQC2000 How to Order, Manifold Options ..... P. 11
VQC1000/2000 Model, Standard/Manifold Specifications ... P. 17

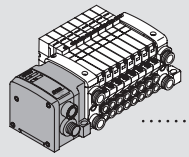

VQC1000/2000
S kit (Serial transmission) EX500 ..... P. 19

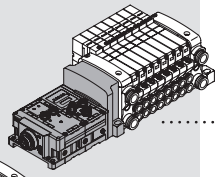

VQC1000/2000
S kit (Serial transmission [Fieldbus system]) EX600 ..... P. 23

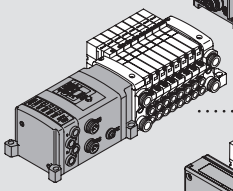

VQC1000/2000
S kit (Serial transmission) EX250 ..... P. 27

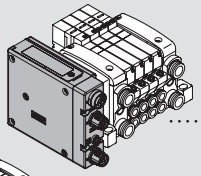

VQC1000/2000
S kit (Serial transmission) EX260 ..... P. 28

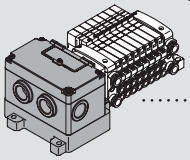

VQC1000/2000
S kit (Serial transmission) EX126 ..... P. 31

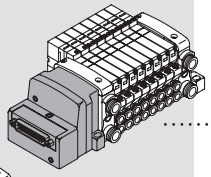

VQC1000/2000
F kit (D-sub connector) ..... P. 33

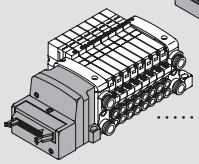

VQC1000/2000
P kit (Flat ribbon cable) ..... P. 35

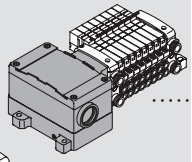

VQC1000/2000
T kit (Terminal block box) ..... P. 37

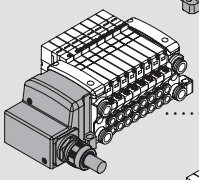

VQC1000/2000
L kit (Lead wire) ..... P. 39

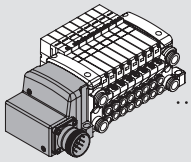

VQC1000/2000
M kit (Circular connector) ..... P. 41

VQC1000/2000 Construction ..... P. 43
VQC1000/2000 Exploded View of Manifold ..... P. 45
VQC1000/2000 Manifold Optional Parts ..... P. 49
VQC1000/2000 Specific Product Precautions ..... P. 56

Base Mounted
Plug-in Unit
Series VQC1000

How to Order Manifold

VV5QC 1 1 – 08 C6 FD1 ..... F · L · M / P · T kit

VV5QC 1 1 – 08 C6 SDQ □ □ □ □ □ □ – □ ..... S kit

Series VQC1000 • • Base mounted plug-in

Enter EX600-compliant S kit only. ❹ ❻

❺ ❼ ❽ ❾ Enter EX250-compliant S kit only.

❶ Stations

01	1 station
⋮	⋮

The maximum number of stations differs depending on the electrical entry. (Refer to ❸ Kit type/Electrical entry/Cable length.)

Note) In case of compatibility with the S kit/AS-Interface, the maximum number of solenoids is as shown below, so please be careful of the number of stations.
- 8 in/8 out: Maximum 8 solenoids
- 4 in/4 out: Maximum 4 solenoids

❷ Cylinder port size

C3	With ø3.2 one-touch fitting
C4	With ø4 one-touch fitting
C6	With ø6 one-touch fitting
M5	M5 thread
CM	Mixed sizes and with port plug
L3	Top ported elbow with ø3.2 one-touch fitting
L4	Top ported elbow with ø4 one-touch fitting
L6	Top ported elbow with ø6 one-touch fitting
L5	M5 thread
B3	Bottom ported elbow with ø3.2 one-touch fitting
B4	Bottom ported elbow with ø4 one-touch fitting
B6	Bottom ported elbow with ø6 one-touch fitting
B5	M5 thread
LM	Elbow port, mixed sizes
MM Note 2)	Mixed size for different types of piping, option installed

Note 1) Indicate the size by means of the manifold specification sheet in case of "CM", "LM", "NM".
Note 2) When selecting the mixed size for different types of piping or dual flow fitting assembly, enter "MM" and give instructions in the manifold specification sheet.
Note 3) Symbols for inch sizes are as follows:
- N1: ø1/8" • N3: ø5/32"
- N7: ø1/4" • NM: Mixed

The top ported elbow is LN□ and the bottom ported elbow is BN□.

❹ End plate type (Enter EX600-compliant S kit only.)

—	Without end plate
2	M12 connector power supply
3	7/8 inch connector power supply
4	M12 connector power supply (4pins/5pins) IN/OUT
5	M12 connector power supply (4pins/5pins) IN/OUT

Note) Without SI unit, the symbol is nothing.
∗ : The pin layout for "4" and "5" pin connector is different.

❻ I/O unit sations (Enter EX600-compliant S kit only.)

—	None
1	1 station
⋮	⋮
9	9 stations

Note 1) Without SI unit, the symbol is nil.
Note 2) SI unit is not included in I/O unit stations.
Note 3) When I/O unit is selected, it is shipped separately, and assembled by customer. Refer to the attached operation manual for mounting method.

❼ Number of input blocks
(Enter EX250-compliant S kit only.)

—	Without SI unit/input block (SD0)
0	Without input block
1	With 1 input block
⋮	⋮
8	With 8 input blocks

Note) For the S kit compatible with AS-Interface, the maximum number of stations is limited. Refer to page 6 for details.

❽ Input block type
(Enter EX250-compliant S kit only.)

—	Without input block
1	M12, 2 inputs
2	M12, 4 inputs
3	M8, 4 inputs (3 pins)

❾ Input block specification
(Enter EX250-compliant S kit only.)

—	PNP sensor input (+ COM) or without input block
N	NPN sensor input (– COM)

❿ Option

—	None
B Note 2)	All stations with back pressure check valve
D	With DIN rail (Rail length: Standard)
D□ Note 3)	With DIN rail (Rail length: Special)
K Note 4)	Special wiring spec. (Except double wiring)
N Note 10)	With name plate
R Note 5)	External pilot
S Note 6)	Direct EXH outlet with built-in silencer

Note 1) When two or more symbols are specified, indicate them alphabetically. Example: -BRS
Note 2) When a back pressure check valve is desired, and is to be installed only in certain manifold stations, specify the mounting position by means of the manifold specification sheet.
Note 3) For special DIN rail length, indicate "D□".
(Enter the number of stations inside □.)
Example: -D08
In this case, stations will be mounted on a DIN rail for 8 stations regardless of the actual number of manifold stations. The specified number of stations must be larger than the number of stations on the manifold.
Indicate "-D0" for the option without DIN rail.
Note 4) When single wiring and double wiring are mixed, specify wiring type of each station by means of the manifold specification sheet.
Note 5) For external pilot option, "-R", indicate the external pilot specification "R" for the applicable valves as well.
Note 6) Built-in silencer type does not satisfy IP67.
Note 7) When changing the specifications of the EX600 from no DIN rail to DIN rail mounting, please consult SMC.
Note 8) When the EX600 "Without SI unit (SD60)" is specified, "With DIN rail (D)" cannot be selected.
Note 9) DIN rail is not attached (but shipped together) on the manifold in case of the EX600 with DIN rail. Refer to back page 57 for mounting method.
Note 10) When mounting the blanking plate with connector and the slide locking manual type valve by ordering only the manifold, order the name plate separately. For details, refer to page 50.

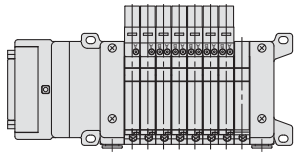

D side Stations···1···2···3···4···5···6···7···8···n U side

∗ Stations are counted from station 1 on the D-side.

❺ SI unit COM

SI unit COM		EX250 integrated-type (I/O) serial transmission system					
		DeviceNet™	PROFIBUS DP	CC-Link	AS-Interface	CANopen	EtherNet/IP™
—	+ COM	—	—	○	—	—	—
N	– COM	○	○	—	○	○	○

SI unit COM		EX500 Gateway Decentralised system 2 (128 points)		EX500 Gateway Decentralised system (64 points)			EX260 integrated-type (for output) serial transmission system							EX126 integrated-type (for output) serial transmission system
		EtherNet/IP™	PROFINET	DeviceNet™	PROFIBUS DP	EtherNet/IP™	DeviceNet™	PROFIBUS DP	CC-Link	EtherCAT	PROFINET	EtherNet/IP™	EtherNet POWERLINK	CC-Link
—	+ COM	—	—	○	○	○	○	○	○	○	○	○	—	○
N	– COM	○	○	○	○	○	○	○	○	○	○	○	○	—

SI unit COM		EX600 integrated-type (I/O) serial transmission system (Fieldbus system)								
		DeviceNet™	PROFIBUS DP	CC-Link	EtherNet/IP™	EtherCAT	PROFINET	EtherNet/IP™ compatible wireless base	PROFINET compatible wireless base	Wireless remote
—	+ COM	○	○	○	○	○	○	○	○	○
N	– COM	○	○	○	○	○	○	○	○	○

Note) Without SI unit (SD0□), the symbol is —.

❸ Kit type/Electrical entry/Cable length

∗ Numbers in parentheses represent the maximum number of solenoids in case of mixed single and double wiring. The maximum number of stations is determined by the total number of solenoids. When ordering mixed wiring, please add the option symbol "-K".

S kit (Serial transmission: EX500 gateway-type)

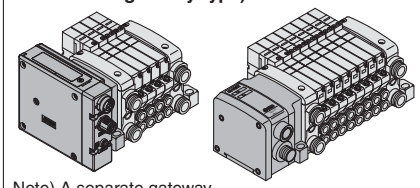

Note) A separate gateway unit and communication cable are required.

IP67 compliant

SI unit: **EX500**

SD0	Without SI unit	—	—
SDA3	EX500 Gateway Decentralized System 2 (128 points) EtherNet/IP™, PROFINET	32 outputs Note 1)	1 to 12 stations (24)
SDA2	EX500 Gateway Decentralized System (64 points) DeviceNet™,PROFIBUS DP, EtherNet/IP™	16 outputs	1 to 8 stations (16)

S kit (Serial transmission (Fieldbus system): EX600 integrated-type (I/O))

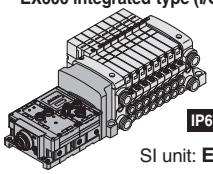

IP67 compliant

SI unit: **EX600**

SD60	Without SI unit	1 to 12 stations (24)
SD6Q	DeviceNet™	
SD6N	PROFIBUS DP	
SD6V	CC-Link	
SD6F	PROFINET	
SD6ZE	EtherNet/IP™ (1 port)	
SD6EA	EtherNet/IP™ (2 port)	
SD6D	EtherCAT	
SD6WE	EtherNet/IP™ compatible wireless base Note 5)	
SD6WF	PROFINET compatible wireless base Note 5)	
SD6WS	Wireless remote Note 5)	

S kit (Serial transmission: EX250 integrated-type (I/O))

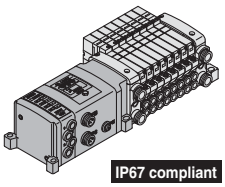

IP67 compliant

SI unit: **EX250**

SD0	Without SI unit	1 to 12 stations (24)
SDQ	DeviceNet™	
SDN	PROFIBUS DP	
SDV	CC-Link	
SDTA	AS-Interface, 8 in/8 out, 31 slave modes, 2 power supply systems	1 to 4 stations (8)
SDTB	AS-Interface, 4 in/4 out, 31 slave modes, 2 power supply systems	1 to 2 stations (4)
SDTC Note 2)	AS-Interface, 8 in/8 out, 31 slave modes, 1 power supply systems	1 to 4 stations (8)
SDTD Note 2)	AS-Interface, 4 in/4 out, 31 slave modes, 1 power supply systems	1 to 2 stations (4)
SDY	CANopen	1 to 12 stations (24)
SDZEN	EtherNet/IP™	

S kit (Serial transmission: EX260 integrated-type (for output))

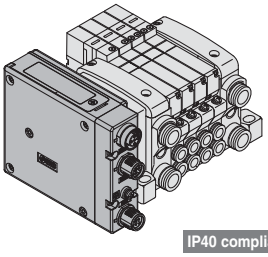

IP40 compliant

SI unit: **EX260** IP67 compliant

Symbol	Protocol	Number of outputs	Communication connector	Stations
SD0	Without SI unit			2 to 12 stations (24)
SQA	DeviceNet™	32	M12	
SQB		16		2 to 8 stations (16)
SNA	PROFIBUS DP	32	M12	2 to 12 stations (24)
SNB		16		2 to 8 stations (16)
SNC		32	D-sub Note 4)	2 to 12 stations (24)
SND		16		2 to 8 stations (16)
SVA	CC-Link	32	M12	2 to 12 stations (24)
SVB		16		2 to 8 stations (16)
SDA	EtherCAT	32	M12	2 to 12 stations (24)
SDB		16		2 to 8 stations (16)
SFA	PROFINET	32	M12	2 to 12 stations (24)
SFB		16		2 to 8 stations (16)
SEA	EtherNet/IP™	32	M12	2 to 12 stations (24)
SEB		16		2 to 8 stations (16)
SGA	EtherNet POWERLINK	32	M12	2 to 12 stations (24)
SGB		16		2 to 8 stations (16)

S kit (Serial transmission: EX126 integrated-type (for output))

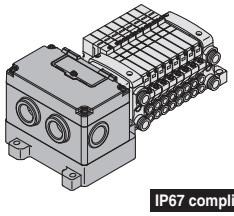

IP67 compliant

SI unit: **EX126**

SDVB	CC-Link	1 to 8 stations (16)

F kit (D-sub connector)

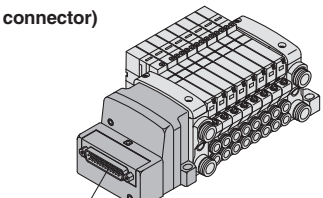

25 pins

IP40 compliant

FD0	D-sub connector (25P) without cable	1 to 12 stations (24)
FD1	D-sub connector (25P) with 1.5 m cable	
FD2	D-sub connector (25P) with 3.0 m cable	
FD3	D-sub connector (25P) with 5.0 m cable	

P kit (Flat ribbon cable)

Note) For a 20P flat ribbon cable, the cable assembly must be ordered separately.

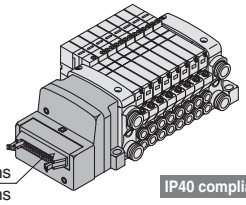

26 pins
20 pins

IP40 compliant

PD0	Flat ribbon cable (26P) without cable	1 to 12 stations (24)
PD1	Flat ribbon cable (26P) with 1.5 m cable	
PD2	Flat ribbon cable (26P) with 3.0 m cable	
PD3	Flat ribbon cable (26P) with 5.0 m cable	
PDC	Flat ribbon cable (20P) without cable	1 to 9 stations (18)

T kit (Terminal block box)

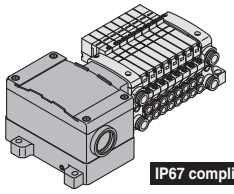

IP67 compliant

TD0	Terminal block box	1 to 10 stations (20)

L kit (Lead wire)

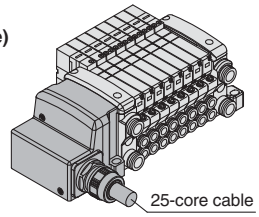

25-core cable

IP67 compliant

LD0	Lead wire (25 cores) 0.6 m lead wire	1 to 12 stations (24)
LD1	Lead wire (25 cores) 1.5 m lead wire	
LD2	Lead wire (25 cores) 3.0 m lead wire	

M kit (Circular connector)

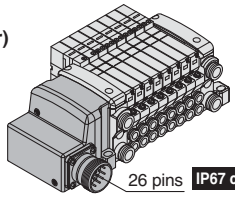

26 pins

IP67 compliant

MD0	Circular connector (26P) without cable	1 to 12 stations (24)
MD1	Circular connector (26P) with 1.5 m cable	
MD2	Circular connector (26P) with 3.0 m cable	
MD3	Circular connector (26P) with 5.0 m cable	

∗ The maximum number of stations displayed in parentheses is applied to the special wiring specifications. (Option "-K")
Note 1) When using the SI unit with 32 outputs, use the GW unit compatible with the EX500 Gateway Decentralized System 2 (128 points).
Note 2) When selecting SI units with SDTC or SDTD specifications, there are limits to the supply current from the SI unit to the input block or valve.
Note 3) When selecting SI units with SDZCN specifications only, IP40 is compatible. (All other SI units are IP67 compliant.)
Note 4) For the SI unit part no., refer to page 7.
Note 5) The wireless system is suitable for use only in a country where it is in accordance with the Radio Act and regulations of that country.

SI Unit Part No.

EX500 Gateway Decentralized System 2 (128 points)

Symbol	Compatible protocol	SI unit part no. Negative common (PNP)	Page
SDA3	EtherNet/IP™	EX500-S103	P.46
	PROFINET		

EX500 Gateway Decentralized System (64 points)

Symbol	Compatible protocol	SI unit part no. Positive common (NPN)	SI unit part no. Negative common (PNP)	Page
SDA2	DeviceNet™	EX500-Q001	EX500-Q101	P.46
	PROFIBUS DP			
	EtherNet/IP™			

EX600

Symbol	Compatible protocol	SI unit part no. Positive common (NPN)	SI unit part no. Negative common (PNP)	Page
SD6Q	DeviceNet™	EX600-SDN2A	EX600-SDN1A	P.46
SD6V	CC-Link	EX600-SMJ2	EX600-SMJ1	
SD6N	PROFIBUS DP	EX600-SPR2A	EX600-SPR1A	
SD6F	PROFINET	EX600-SPN2	EX600-SPN1	
SD6ZE	EtherNet/IP™ (1 port)	EX600-SEN2	EX600-SEN1	
SD6EA	EtherNet/IP™ (2 port)	EX600-SEN4	EX600-SEN3	
SD6D	EtherCAT	EX600-SEC2	EX600-SEC1	
SD6WE	EtherNet/IP™, compatible wireless base Note)	EX600-WEN2	EX600-WEN1	
SDWWF	PROFINET, compatible wireless base Note)	EX600-WPN2	EX600-WPN1	
SD6WS	Wireless remote Note)	EX600-WSV2	EX600-WSV1T	

Note) The wireless system is suitable for use only in a country where it is in accordance with the Radio Act and regulations of that country.

EX260

Symbol	Compatible protocol	Number of outputs	SI unit part no. Positive common (NPN)	SI unit part no. Negative common (PNP)	Communication connector	Page
SQA	DeviceNet™	32	EX260-SDN2	EX260-SDN1	M12	P.47
SQB		16	EX260-SDN4	EX260-SDN3		
SNA	PROFIBUS DP	32	EX260-SPR2	EX260-SPR1		
SNB		16	EX260-SPR4	EX260-SPR3		
SNC		32	EX260-SPR6	EX260-SPR5	D-sub Note)	
SND		16	EX260-SPR8	EX260-SPR7		
SVA	CC-Link	32	EX260-SMJ2	EX260-SMJ1	M12	
SVB		16	EX260-SMJ4	EX260-SMJ3		
SDA	EtherCAT	32	EX260-SEC2	EX260-SEC1	M12	
SDB		16	EX260-SEC4	EX260-SEC3		
SFA	PROFINET	32	EX260-SPN2	EX260-SPN1	M12	
SFB		16	EX260-SPN4	EX260-SPN3		
SEA	EtherNet/IP™	32	EX260-SEN2	EX260-SEN1	M12	
SEB		16	EX260-SEN4	EX260-SEN3		
SGA	EtherNet POWERLINK	32	—	EX260-SPL1	M12	
SGB		16	—	EX260-SPL3		

Note) When the communication connector specification is D-sub, the enclosure is IP40. (IP67 for other specifications)

EX250

Symbol	Compatible protocol	SI unit part no.	Page
SDQ	DeviceNet™	EX250-SDN1	P.47
SDN	PROFIBUS DP	EX250-SPR1	
SDV	CC-Link	EX250-SMJ2	
SDTA	AS-Interface, 8 in/8 out, 31 slave modes, 2 power supply systems	EX250-SAS3	
SDTB	AS-Interface, 4 in/4 out, 31 slave modes, 2 power supply systems	EX250-SAS5	
SDTC	AS-Interface, 8 in/8 out, 31 slave modes, 1 power supply systems	EX250-SAS7	
SDTD	AS-Interface, 4 in/4 out, 31 slave modes, 1 power supply systems	EX250-SAS9	
SDY	CANopen	EX250-SCA1A	
SDZEN	EtherNet/IP™	EX250-SEN1	

EX126

Symbol	Compatible protocol	SI unit part no.	Page
SDVB	CC-Link	EX126D-SMJ1	P.47

For details about the EX series (Serial transmission system), refer to the **WEB catalogue** and the Operation Manual.

How to Order Valves

VQC 1 1 0 0 – 5 1

Series VQC1000 • Ⓐ Ⓑ Ⓒ Ⓓ Ⓔ Ⓕ

Ⓐ Type of actuation

1	2-position single (A)4 2(B) (R1)5 1 3(R2) (P)	Note) A	4-position dual 3-port valve (A) 4(A) 2(B) 5(R1) 1(P) 3(R2) N.C. N.C.
2	2-position double (Metal) (A)4 2(B) (R1)5 1 3(R2) (P)	Note) B	4-position dual 3-port valve (B) 4(A) 2(B) 5(R1) 1(P) 3(R2) N.O. N.O.
	2-position double (Rubber) (A)4 2(B) (R1)5 1 3(R2) (P)	Note) C	4-position dual 3-port valve (C) 4(A) 2(B) 5(R1) 1(P) 3(R2) N.C. N.O.
3	3-position closed centre (A)4 2(B) (R1)5 1 3(R2) (P)	Note) Rubber seal only	
4	3-position exhaust centre (A)4 2(B) (R1)5 1 3(R2) (P)		
5	3-position pressure centre (A)4 2(B) (R1)5 1 3(R2) (P)		

Ⓑ Seal

0	Metal seal
1	Rubber seal

Ⓒ Function

—	Standard (0.4 W)
B	High-speed response type (0.95 W)
K Note 1)	High-pressure type (1.0 MPa, 0.95 W)
N Note 2)	Negative common
R Note 3)	External pilot

∗ When two or more symbols are specified, indicate them alphabetically. However, combination of "B" and "K" is not possible.
Note 1) Metal seal only
Note 2) When "-COM." is specified for the SI unit, select and mount the valve of negative common.
Note 3) Dual 3-port is not applicable.

Ⓓ Coil voltage

5 Note)	24 VDC
6	12 VDC

Note) Only 24 VDC is available with the S kit.

Ⓔ Light/surge voltage suppressor

—	Yes
E Note1, 2)	None (Non-polar)

Note 1) Not applicable to the S kit.
Note 2) A combination of "Function N (Negative common)" and "E" is unavailable.
Since "E" has no polarity, it can also be used as a negative common. Selection of "Function N" is not required.

Ⓕ Manual override

—	Non-locking push type (Tool required)
B	Push-turn locking type (Tool required)
C	Turn locking type (Manual)
D	Slide locking type (Manual)

How to Order Manifold Assembly

Example

Manifold
Power supply with
M12 connector

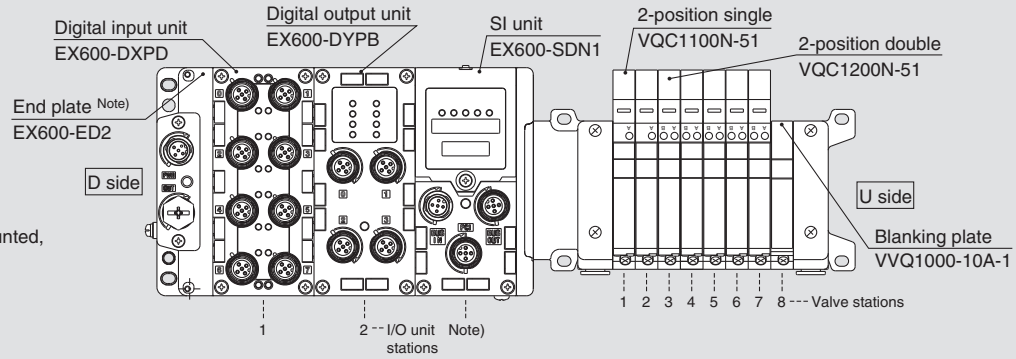

For the I/O unit part number mounted, refer to catalog CAT.EU02-24.
• Digital unit
• Analogue unit

Serial transmission kit

VV5QC11-08C6SD6Q2N2	**1 set**	**Manifold base part number**
∗ **VQC1100N-51**	**2 sets**	**Valve part number (Stations 1 to 2)**
∗ **VQC1200N-51**	**5 sets**	**Valve part number (Stations 3 to 7)**
∗ **VVQ1000-10A-1**	**1 set**	**Blanking plate number (Station 8)**
∗ **EX600-DXPD**	**1 set**	**I/O unit part number (Station 1)**
∗ **EX600-DYPB**	**1 set**	**I/O unit part number (Station 2)**

The asterisk denotes the symbol for assembly.
Prefix it to the part nos. of the solenoid valve, etc.

Enter in order starting from the first station on the D-side. When entry of part numbers becomes complicated, indicate with the manifold specification sheet.

Enter in order starting from the first station on the D-side. When entry of part numbers becomes complicated, indicate with the manifold specification sheet.

Note) Do not enter the SI unit part number and the end plate part number together.

Manifold Options

Refer to pages 49 through to 52 for details.

Blanking plate assembly
VVQ1000-10A-1

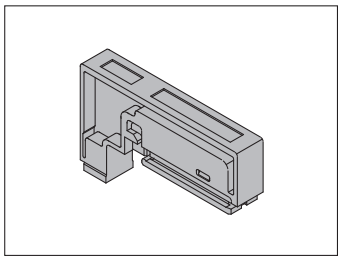

Individual SUP spacer
VVQ1000-P-1-$^{C6}_{N7}$

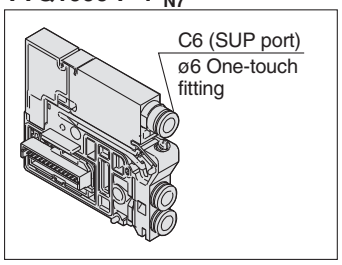

Individual EXH spacer
VVQ1000-R-1-$^{C6}_{N7}$

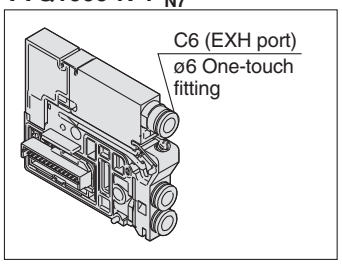

SUP block plate
VVQ1000-16A

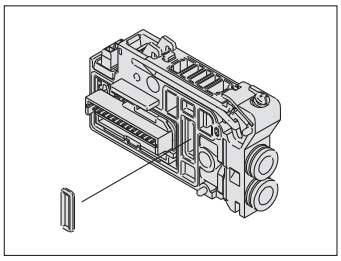

Blanking plate with connector
VVQ1000-1C□-□

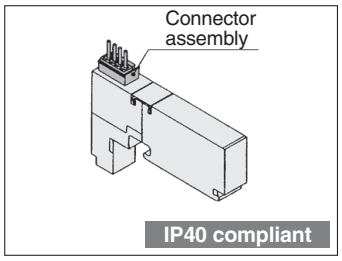

EXH block plate assembly
VVQC1000-19A-$^{S}_{D}$-$^{C3, C4, C6, M5, N1, N3, N7}$

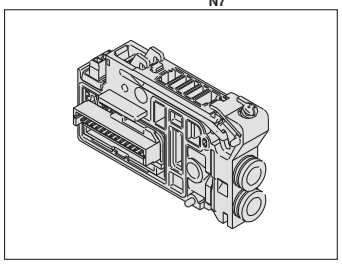

Back pressure check valve assembly [-B]
VVQ1000-18A

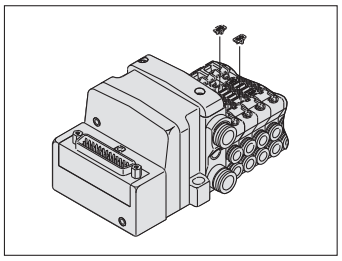

Name plate [-N]
VVQ1000-$^{N}_{NC}$-(1 to Max. stations) (-X4)

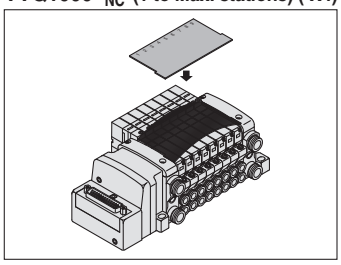

Blanking plug
KQ2P-□

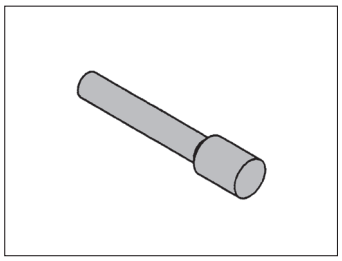

Port plug
VVQ0000-58A

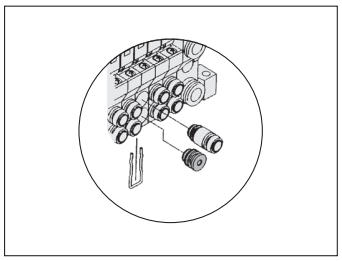

Elbow fitting assembly
VVQ1000-F-L□

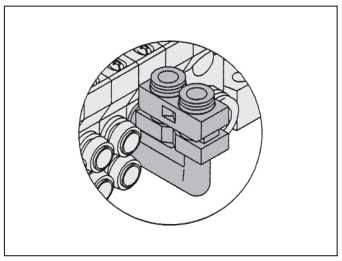

DIN rail mounting bracket [-D]
VVQ1000-57A
{For F/L/M/P/S (EX500) kit}
VVQC1000-57A-S
{For S (EX250) kit}
VVQC1000-57A-T (For T kit)

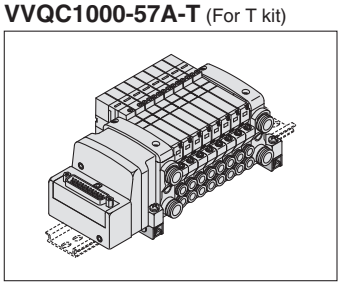

Direct EXH outlet with built-in silencer [-S]

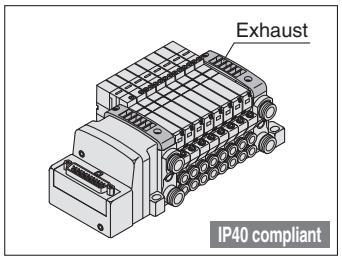

Dual flow fitting assembly
VVQ1000-52A-$^{C8}_{N9}$

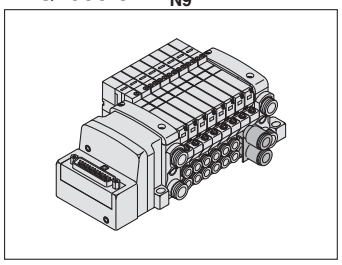

Special electrical wiring specifications [-K]

Wiring example)
D-sub connector

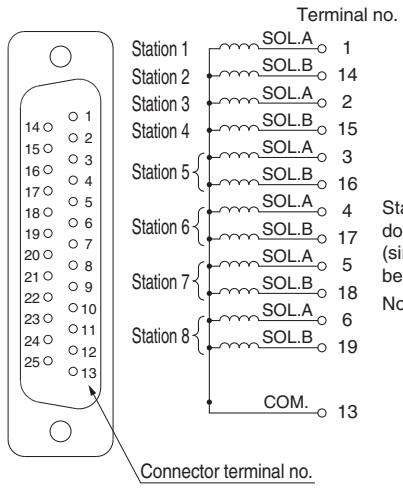

Standard manifolds are for double wiring, but mixed wiring (single and double wiring) can be specified as an option.

Note) Refer to the pages of each kit for details.
F kit ····· P. 33
P kit ····· P. 35
T kit ····· P. 37
L kit ····· P. 39
M kit ····· P. 41

Silencer (For EXH port)
AN15-C08

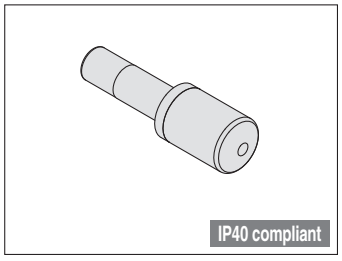

Double check block
VVQ1000-FPG-□□-□

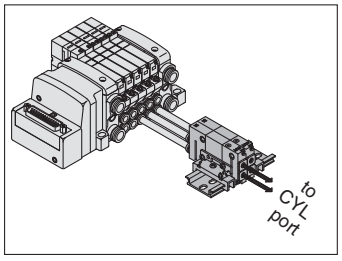

Base Mounted
Plug-in Unit
Series VQC2000

How to Order Manifold

VV5QC 2 1 – 08 C8 FD1 ····· F · L · M / P · T kit

**VV5QC 2 1 – 08 C8 SDQ – ** ····· S kit

Series VQC2000 • • Base mounted plug-in

Enter EX600-compliant S kit only. ····· ❹ ····· ❻ ❺ ❼ ··· ❽ ··· ❾ ····· Fill out for I/O serial kits only.

❶ Stations

01	1 station
⋮	⋮

The maximum number of stations differs depending on the electrical entry. (Refer to ❸ Kit type/Electrical entry/Cable length.)

Note) In case of compatibility with the S kit/AS-Interface, the maximum number of solenoids is as shown below, so please be careful of the number of stations.
- 8 in/8 out: Maximum 8 solenoids
- 4 in/4 out: Maximum 4 solenoids

❷ Cylinder port size

C4	With ø4 one-touch fitting
C6	With ø6 one-touch fitting
C8	With ø8 one-touch fitting
CM	Mixed sizes and with port plug
L4	Top ported elbow with ø4 one-touch fitting
L6	Top ported elbow with ø6 one-touch fitting
L8	Top ported elbow with ø8 one-touch fitting
B4	Bottom ported elbow with ø4 one-touch fitting
B6	Bottom ported elbow with ø6 one-touch fitting
B8	Bottom ported elbow with ø8 one-touch fitting
LM	Elbow port, mixed sizes
MM Note 2)	Mixed size for different types of piping, option installed

Note 1) Indicate the size by means of the manifold specification sheet in case of "CM", "LM", "NM".
Note 2) When selecting the mixed size for different types of piping or dual flow fitting assembly, enter "MM" and give instructions in the manifold specification sheet.
Note 3) Symbols for inch sizes are as follows:
- N3: ø5/32" • N7: ø1/4"
- N9: ø5/16" • NM: Mixed

The top ported elbow is LN□ and the bottom ported elbow is BN□.

❹ End plate type (Enter EX600-compliant S kit only.)

—	Without end plate
2	M12 connector power supply
3	7/8 inch connector power supply
4	M12 connector power supply (4pins/5pins) IN/OUT
5	M12 connector power supply (4pins/5pins) IN/OUT

Note) Without SI unit, the symbol is nothing.
∗ : The pin layout for "4" and "5" pin connector is different.

❻ I/O unit sations (Enter EX600-compliant S kit only.)

—	None
1	1 station
⋮	⋮
9	9 stations

Note 1) Without SI unit, the symbol is nothing.
Note 2) SI unit is not included in I/O unit stations.
Note 3) When I/O unit is selected, it is shipped separately, and assembled by customer. Refer to the attached operation manual for mounting method.

❼ Number of input blocks
(Enter EX250-compliant S kit only.)

—	Without SI unit/input block (SD0)
0	Without input block
1	With 1 input block
⋮	⋮
8	With 8 input blocks

Note) For the S kit compatible with AS-Interface, the maximum number of stations is limited. Refer to page 10 for details.

❽ Input block type
(Enter EX250-compliant S kit only.)

—	Without input block
1	M12, 2 inputs
2	M12, 4 inputs
3	M8, 4 inputs (3 pins)

❾ Input block specification
(Enter EX250-compliant S kit only.)

—	PNP sensor input (+ COM) or without input block
N	NPN sensor input (– COM)

❿ Option

—	None
B Note 2)	All stations with back pressure check valve
D	With DIN rail (Rail length: Standard) Note 9)
D□ Note 4)	With DIN rail (Rail length: Special) Note 9)
K Note 5)	Special wiring spec. (Except double wiring)
N Note 12)	With name plate
R Note 6)	External pilot
S Note 7)	Direct EXH outlet with built-in silencer
T Note 8)	Branched P and R ports on U-side

Note 1) When two or more symbols are specified, indicate them alphabetically. Example: -BRS
Note 2) When a back pressure check valve is desired, and is to be installed only in certain manifold stations, specify the mounting position by means of the manifold specification sheet.
Note 3) When DIN rail mounting (with DIN rail) is selected with a power supply 7/8 inch connector for end plate of the VQC2000 series, and I/O unit station number is 9, and max. valve station number is 23. DIN rail mount cannot be specified for 24 stations. (Refer to the DIN rail full length on page 26.)
Note 4) For special DIN rail length, indicate "D□".
(Enter the number of stations inside □.)
Example: -D08
In this case, stations will be mounted on a DIN rail for 8 stations regardless of the actual number of manifold stations.
The specified number of stations must be larger than the number of stations on the manifold.
Indicate "-D0" for the option without DIN rail.
Note 5) When single wiring and double wiring are mixed, specify wiring type of each station by means of the manifold specification sheet.
Note 6) For external pilot option, "-R", indicate the external pilot specification "R" for the applicable valves as well.
Note 7) Built-in silencer type does not satisfy IP67.
Note 8) SUP and EXH ports on the U-side (on cylinder port side and coil side is branched.) Port is equipped with one-touch fitting for ø12.
Note 9) When changing the specifications of the EX600 from no DIN rail to DIN rail mounting, please consult SMC.
Note 10) When the EX600 "Without SI unit (SD60)" is specified, "With DIN rail (D)" cannot be selected.
Note 11) DIN rail is not attached (but shipped together) on the manifold in case of the EX600 with DIN rail.
Refer to back page 57 for mounting method.
Note 12) When mounting the blanking plate with connector and the slide locking manual type valve by ordering only the manifold, order the name plate separately. For details, refer to page 50.

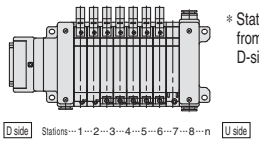

∗ Stations are counted from station 1 on the D-side.

❺ SI unit COM

SI unit COM		EX250 integrated-type (I/O) serial transmission system					
		DeviceNet™	PROFIBUS DP	CC-Link	AS-Interface	CANopen	EtherNet/IP™
—	+ COM	—	—	○	—	—	—
N	– COM	○	○	—	○	○	○

SI unit COM		EX500 Gateway Decentralised system 2 (128 points)		EX500 Gateway Decentralised system (64 points)			EX260 integrated-type (for output) serial transmission system							EX126 integrated-type (for output) serial transmission system
		EtherNet/IP™	PROFINET	DeviceNet™	PROFIBUS DP	EtherNet/IP™	DeviceNet™	PROFIBUS DP	CC-Link	EtherCAT	PROFINET	EtherNet/IP™	EtherNet POWERLINK	CC-Link
—	+ COM	—	—	○	○	○	○	○	○	○	○	○	—	○
N	– COM	○	○	○	○	○	○	○	○	○	○	○	○	—

SI unit COM		EX600 integrated-type (I/O) serial transmission system (Fieldbus system)								
		DeviceNet™	PROFIBUS DP	CC-Link	EtherNet/IP™	EtherCAT	PROFINET	EtherNet/IP™ compatible wireless base	PROFINET compatible wireless base	Wireless remote
—	+ COM	○	○	○	○	○	○	○	○	○
N	– COM	○	○	○	○	○	○	○	○	○

Note) Without SI unit (SD0□), the symbol is —.

❸ Kit type/Electrical entry/Cable length

∗ Numbers in parentheses represent the maximum number of solenoids in case of mixed single and double wiring. The maximum number of stations is determined by the total number of solenoids. When ordering mixed wiring, please add the option symbol "-K".

S kit (Serial transmission: EX500 gateway-type)

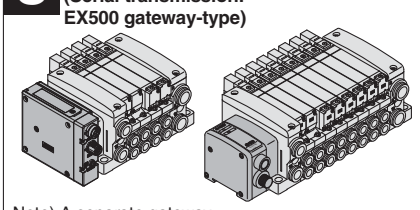

Note) A separate gateway unit and communication cable are required.

IP67 compliant

SI unit: **EX500**

SD0	Without SI unit	—	—
SDA3	EX500 Gateway Decentralized System 2 (128 points) EtherNet/IP™,PROFINET	32 outputs Note 1)	1 to 12 stations (24)
SDA2	EX500 Gateway Decentralized System (64 points) DeviceNet™,PROFIBUS DP, EtherNet/IP™	16 outputs	1 to 8 stations (16)

S kit (Serial transmission (Fieldbus system): EX600 integrated-type (I/O))

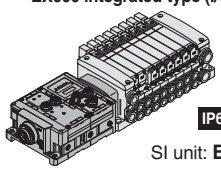

IP67 compliant

SI unit: **EX600**

SD60	Without SI unit	1 to 12 stations (24)
SD6Q	DeviceNet™	
SD6N	PROFIBUS DP	
SD6V	CC-Link	
SD6F	PROFINET	
SD6ZE	EtherNet/IP™ (1 port)	
SD6EA	EtherNet/IP™ (2 port)	
SD6D	EtherCAT	
SD6WE	EtherNet/IP™ compatible wireless base Note 5)	
SD6WF	PROFINET compatible wireless base Note 5)	
SD6WS	Wireless remote Note 5)	

S kit (Serial transmission: EX250 integrated-type (I/O))

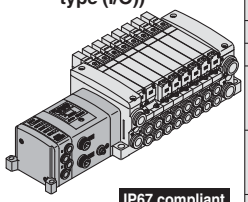

IP67 compliant

SI unit: **EX250**

SD0	Without SI unit	1 to 12 stations (24)
SDQ	DeviceNet™	
SDN	PROFIBUS DP	
SDV	CC-Link	
SDTA	AS-Interface, 8 in/8 out, 31 slave modes, 2 power supply systems	1 to 4 stations (8)
SDTB	AS-Interface, 4 in/4 out, 31 slave modes, 2 power supply systems	1 to 2 stations (4)
Note 2) **SDTC**	AS-Interface, 8 in/8 out, 31 slave modes, 1 power supply systems	1 to 4 stations (8)
Note 2) **SDTD**	AS-Interface, 4 in/4 out, 31 slave modes, 1 power supply systems	1 to 2 stations (4)
SDY	CANopen	1 to 12 stations (24)
SDZEN	EtherNet/IP™	

S kit (Serial transmission: EX260 integrated-type (for output))

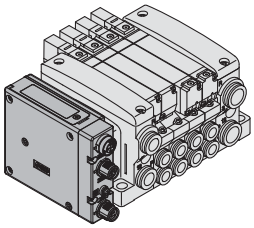

IP40 compliant

SI unit: **EX260** IP67 compliant

Symbol	Protocol	Number of outputs	Communication connector	Stations
SD0	Without SI unit			2 to 12 stations (24)
SQA	DeviceNet™	32	M12	
SQB		16		2 to 8 stations (16)
SNA	PROFIBUS DP	32	M12	2 to 12 stations (24)
SNB		16		2 to 8 stations (16)
SNC		32	D-sub Note 4)	2 to 12 stations (24)
SND		16		2 to 8 stations (16)
SVA	CC-Link	32	M12	2 to 12 stations (24)
SVB		16		2 to 8 stations (16)
SDA	EtherCAT	32	M12	2 to 12 stations (24)
SDB		16		2 to 8 stations (16)
SFA	PROFINET	32	M12	2 to 12 stations (24)
SFB		16		2 to 8 stations (16)
SEA	EtherNet/IP™	32	M12	2 to 12 stations (24)
SEB		16		2 to 8 stations (16)
SGA	EtherNet POWERLINK	32	M12	2 to 12 stations (24)
SGB		16		2 to 8 stations (16)

S kit (Serial transmission: EX126 integrated-type (for output))

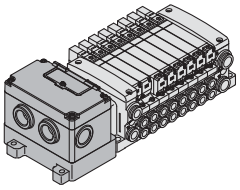

IP67 compliant

SI unit: **EX126**

SDVB	CC-Link	1 to 8 stations (16)

F kit (D-sub connector)

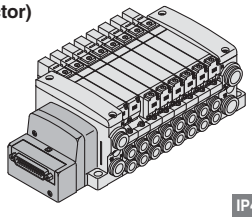

IP40 compliant

FD0	D-sub connector (25P) without cable	1 to 12 stations (24)
FD1	D-sub connector (25P) with 1.5 m cable	
FD2	D-sub connector (25P) with 3.0 m cable	
FD3	D-sub connector (25P) with 5.0 m cable	

P kit (Flat ribbon cable)

Note) For a 20P flat ribbon cable, the cable assembly must be ordered separately.

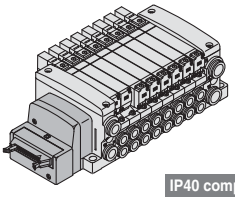

IP40 compliant

PD0	Flat ribbon cable (26P) without cable	1 to 12 stations (24)
PD1	Flat ribbon cable (26P) with 1.5 m cable	
PD2	Flat ribbon cable (26P) with 3.0 m cable	
PD3	Flat ribbon cable (26P) with 5.0 m cable	
PDC	Flat ribbon cable (20P) without cable	1 to 9 stations (18)

T kit (Terminal block box)

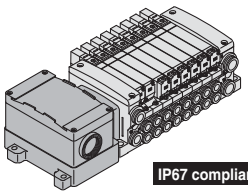

IP67 compliant

TD0	Terminal block box	1 to 10 stations (20)

L kit (Lead wire)

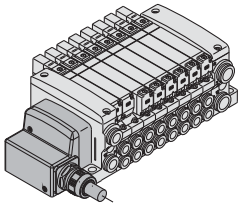

IP67 compliant

LD0	Lead wire (25 cores) 0.6 m lead wire	1 to 12 stations (24)
LD1	Lead wire (25 cores) 1.5 m lead wire	
LD2	Lead wire (25 cores) 3.0 m lead wire	

M kit (Circular connector)

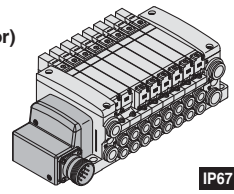

IP67 compliant

MD0	Circular connector (26P) without cable	1 to 12 stations (24)
MD1	Circular connector (26P) with 1.5 m cable	
MD2	Circular connector (26P) with 3.0 m cable	
MD3	Circular connector (26P) with 5.0 m cable	

∗ The maximum number of stations displayed in parentheses is applied to the special wiring specifications. (Option "-K")
Note 1) When using the SI unit with 32 outputs, use the GW unit compatible with the EX500 Gateway Decentralized System 2 (128 points).
Note 2) When selecting SI units with SDTC or SDTD specifications, there are limits to the supply current from the SI unit to the input block or valve.
Note 3) When selecting SI units with SDZCN specifications only, IP40 is compatible. (All other SI units are IP67 compliant.)
Note 4) For the SI unit part no., refer to page 13.
Note 5) The wireless system is suitable for use only in a country where it is in accordance with the Radio Act and regulations of that country.

SI Unit Part No.

EX500 Gateway Decentralized System 2 (128 points)

Symbol	Compatible protocol	SI unit part no.	Page
		Negative common (PNP)	
SDA3	EtherNet/IP™	EX500-S103	P.46
	PROFINET		

EX500 Gateway Decentralized System (64 points)

Symbol	Compatible protocol	SI unit part no.		Page
		Positive common (NPN)	Negative common (PNP)	
SDA2	DeviceNet™	EX500-Q001	EX500-Q101	P.46
	PROFIBUS DP			
	EtherNet/IP™			

EX600

Symbol	Compatible protocol	SI unit part no.		Page
		Positive common (NPN)	Negative common (PNP)	
SD6Q	DeviceNet™	EX600-SDN2A	EX600-SDN1A	P.46
SD6V	CC-Link	EX600-SMJ2	EX600-SMJ1	
SD6N	PROFIBUS DP	EX600-SPR2A	EX600-SPR1A	
SD6F	PROFINET	EX600-SPN2	EX600-SPN1	
SD6ZE	EtherNet/IP™ (1 port)	EX600-SEN2	EX600-SEN1	
SD6EA	EtherNet/IP™ (2 port)	EX600-SEN4	EX600-SEN3	
SD6D	EtherCAT	EX600-SEC2	EX600-SEC1	
SD6WE	EtherNet/IP™, compatible wireless base Note)	EX600-WEN2	EX600-WEN1	
SDWWF	PROFINET, compatible wireless base Note)	EX600-WPN2	EX600-WPN1	
SD6WS	Wireless remote Note)	EX600-WSV2	EX600-WSV1	

Note) The wireless system is suitable for use only in a country where it is in accordance with the Radio Act and regulations of that country.

EX260

Symbol	Compatible protocol	Number of outputs	SI unit part no.		Communication connector	Page
			Positive common (NPN)	Negative common (PNP)		
SQA	DeviceNet™	32	EX260-SDN2	EX260-SDN1	M12	P.47
SQB		16	EX260-SDN4	EX260-SDN3		
SNA	PROFIBUS DP	32	EX260-SPR2	EX260-SPR1		
SNB		16	EX260-SPR4	EX260-SPR3		
SNC		32	EX260-SPR6	EX260-SPR5	D-sub Note)	
SND		16	EX260-SPR8	EX260-SPR7		
SVA	CC-Link	32	EX260-SMJ2	EX260-SMJ1	M12	
SVB		16	EX260-SMJ4	EX260-SMJ3		
SDA	EtherCAT	32	EX260-SEC2	EX260-SEC1	M12	
SDB		16	EX260-SEC4	EX260-SEC3		
SFA	PROFINET	32	EX260-SPN2	EX260-SPN1	M12	
SFB		16	EX260-SPN4	EX260-SPN3		
SEA	EtherNet/IP™	32	EX260-SEN2	EX260-SEN1	M12	
SEB		16	EX260-SEN4	EX260-SEN3		
SGA	EtherNet POWERLINK	32	—	EX260-SPL1	M12	
SGB		16	—	EX260-SPL3		

Note) When the communication connector specification is D-sub, the enclosure is IP40. (IP67 for other specifications)

EX250

Symbol	Compatible protocol	SI unit part no.	Page
SDQ	DeviceNet™	EX250-SDN1	P.47
SDN	PROFIBUS DP	EX250-SPR1	
SDV	CC-Link	EX250-SMJ2	
SDTA	AS-Interface, 8 in/8 out, 31 slave modes, 2 power supply systems	EX250-SAS3	
SDTB	AS-Interface, 4 in/4 out, 31 slave modes, 2 power supply systems	EX250-SAS5	
SDTC	AS-Interface, 8 in/8 out, 31 slave modes, 1 power supply systems	EX250-SAS7	
SDTD	AS-Interface, 4 in/4 out, 31 slave modes, 1 power supply systems	EX250-SAS9	
SDY	CANopen	EX250-SCA1A	
SDZEN	EtherNet/IP™	EX250-SEN1	

EX126

Symbol	Compatible protocol	SI unit part no.	Page
SDVB	CC-Link	EX126D-SMJ1	P.47

For details about the EX series (Serial transmission system), refer to the **WEB catalogue** and the Operation Manual.

How to Order Valves

VQC 2 1 0 0 – 5 1

Series VQC2000 • Ⓐ Ⓑ Ⓒ Ⓓ Ⓔ Ⓕ

Ⓐ Type of actuation

1	2-position single (A)4 2(B) (R1)5 1 3(R2) (P)	Note) A	4-position dual 3-port valve (A) 4(A) 2(B) 5(R1) 1(P) 3(R2) N.C. N.C.
2	2-position double (Metal) (A)4 2(B) (R1)5 1 3(R2) (P)	Note) B	4-position dual 3-port valve (B) 4(A) 2(B) 5(R1) 1(P) 3(R2) N.O. N.O.
	2-position double (Rubber) (A)4 2(B) (R1)5 1 3(R2) (P)	Note) C	4-position dual 3-port valve (C) 4(A) 2(B) 5(R1) 1(P) 3(R2) N.C. N.O.
3	3-position closed centre (A)4 2(B) (R1)5 1 3(R2) (P)	Note) Rubber seal only	
4	3-position exhaust centre (A)4 2(B) (R1)5 1 3(R2) (P)		
5	3-position pressure centre (A)4 2(B) (R1)5 1 3(R2) (P)		

Ⓑ Seal

0	Metal seal
1	Rubber seal

Ⓒ Function

—	Standard (0.4 W)
B	High-speed response type (0.95 W)
K Note 1)	High-pressure type (1.0 MPa, 0.95 W)
N Note 2)	Negative common
R Note 3)	External pilot

∗ When two or more symbols are specified, indicate them alphabetically. However, combination of "B" and "K" is not possible.
Note 1) Metal seal only
Note 2) When "-COM." is specified for the SI unit, select and mount the valve of negative common.
Note 3) Dual 3-port type is not applicable.

Ⓓ Coil voltage

5 Note)	24 VDC
6	12 VDC

Note) Only 24 VDC is available with the S kit.

Ⓔ Light/surge voltage suppressor

—	Yes
E Note1, 2)	None (Non-polar)

Note 1) Not applicable to the S kit.
Note 2) A combination of "Function N (Negative common)" and "E" is unavailable.
Since "E" has no polarity, it can also be used as a negative common. Selection of "Function N" is not required.

Ⓕ Manual override

—	Non-locking push type (Tool required)
B	Push-turn locking type (Tool required)
C	Turn locking type (Tool required)
D	Slide locking type (Manual)

How to Order Manifold Assembly

Example

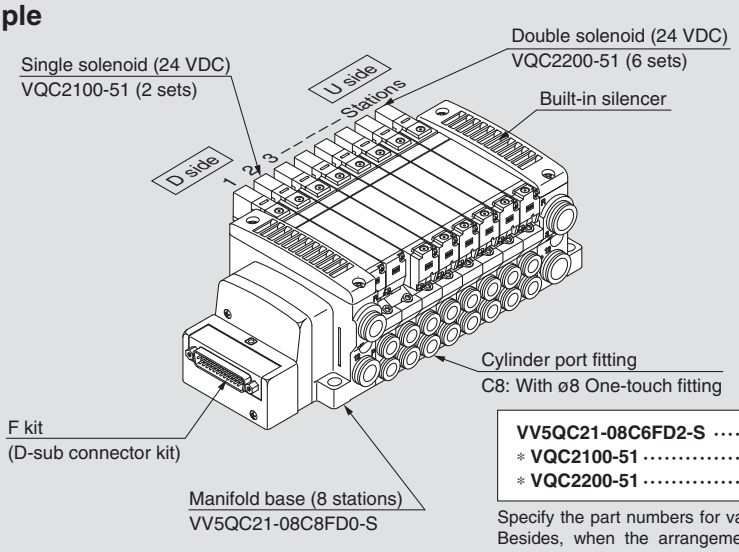

VV5QC21-08C6FD2-S ····· 1 set (F kit, built-in silencer 8-station manifold base part no.)
∗ VQC2100-51 ····· 2 sets (Single solenoid part no.)
∗ VQC2200-51 ····· 6 sets (Double solenoid part no.)

Specify the part numbers for valves and options together beneath the manifold base part number. Besides, when the arrangement will be complicated, specify them by means of the manifold specification sheet.

Manifold Options

Refer to pages 49 through to 52 for details.

Blanking plate assembly
VVQ2000-10A-1

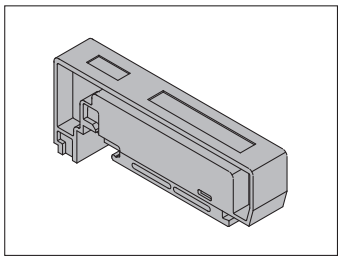

Individual SUP spacer
VVQ2000-P-1-C8/N9

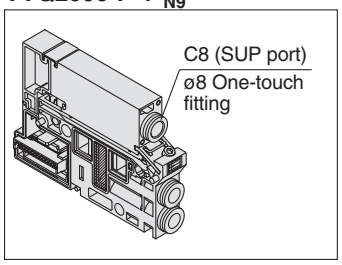

Individual EXH spacer
VVQ2000-R-1-C8/N9

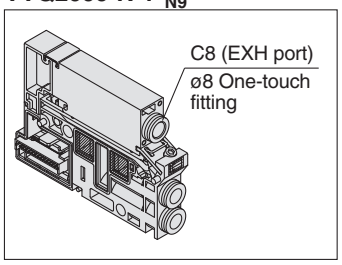

SUP block plate
VVQ2000-16A

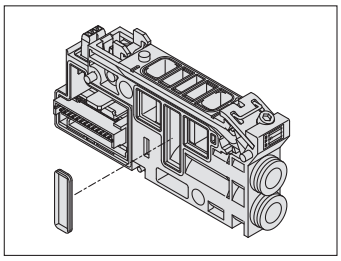

EXH block plate
VVQ2000-19A

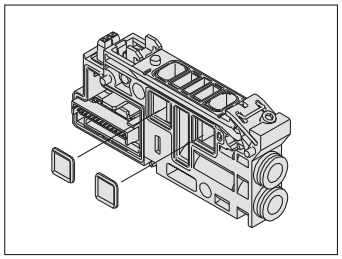

Back pressure check valve assembly [-B]
VVQ2000-18A

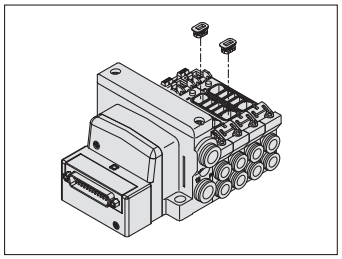

Name plate [-N]
VVQ2000-N-(1 to Max. stations) (-X4)

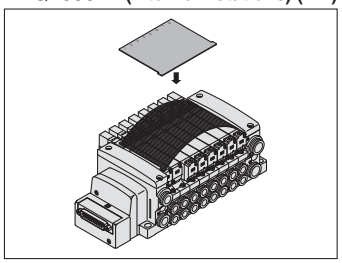

Blanking plug
KQ2P-□

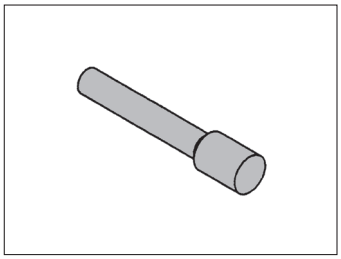

Port plug
VVQ1000-58A

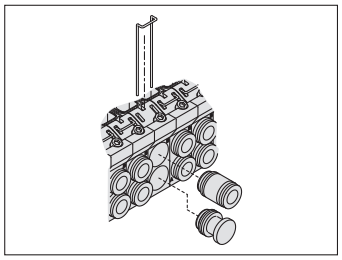

DIN rail mounting bracket [-D]
VVQ2000-57A
{For F/L/M/P/S (EX500) kit}
VVQ2000-57A-S
{For S (EX250) kit}
VVQC2000-57A-T (For T kit)

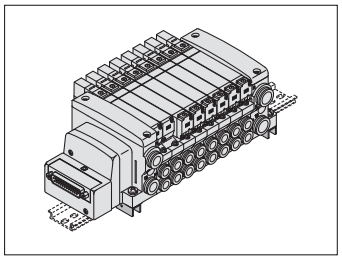

Direct EXH outlet with built-in silencer [-S]

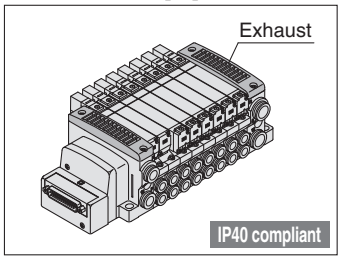

Silencer (For EXH port)
AN20-C10

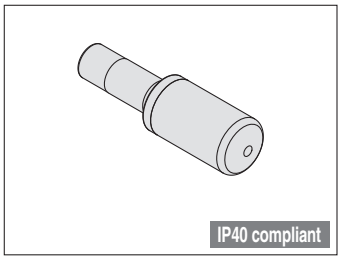

Elbow fitting assembly
VVQ2000-F-L□

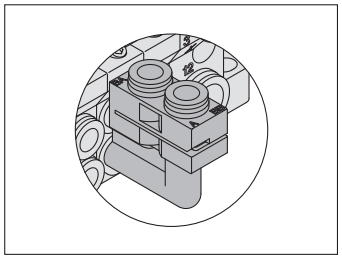

Dual flow fitting assembly
VVQ2000-52A-C10/N11

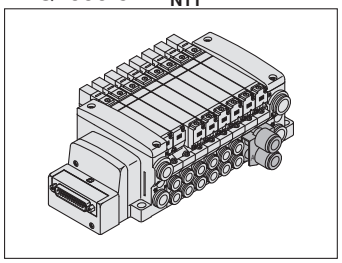

Double check block
VVQ2000-FPG-□□-□

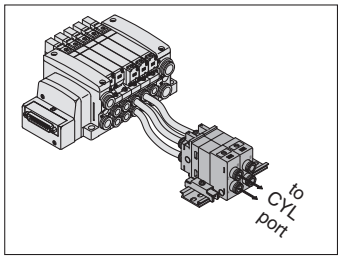

Special electrical wiring specifications [-K]

Wiring example)
D-sub connector

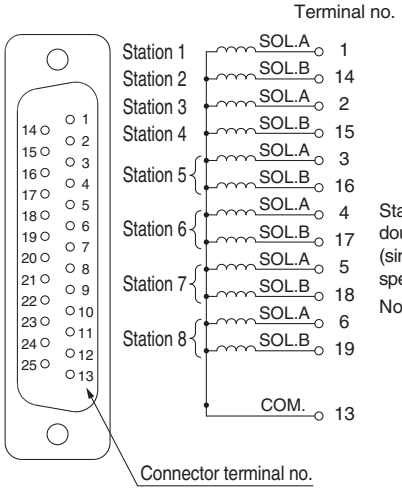

Standard manifolds are for double wiring, but mixed wiring (single and double wiring) can be specified as an option.

Note) Refer to the pages of each kit for details.
F kit ····· P. 33
P kit ····· P. 35
T kit ····· P. 37
L kit ····· P. 39
M kit ····· P. 41

Plug-in Unit

Model

Symbol

2-position single

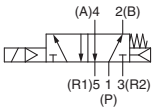

2-position double (Metal)

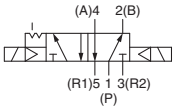

2-position double (Rubber)

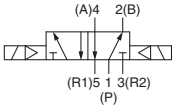

3-position closed centre

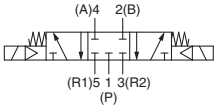

3-position exhaust centre

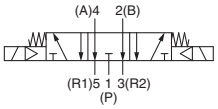

3-position pressure centre

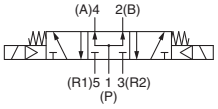

4-position dual 3-port valve (A)

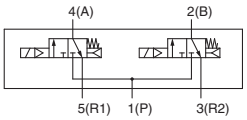

4-position dual 3-port valve (B)

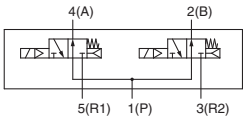

4-position dual 3-port valve (C)

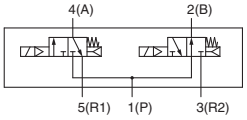

Series	Type of actuation		Model		Flow-rate characteristics: 1 → 4, 2 (P → A, B) C [dm³/(s·bar)]	b	Cv	Q [ℓ/min] (ANR)[Note 3]	4, 2 → 5, 3 (A, B → R1, R2) C [dm³/(s·bar)]	b	Cv	Q [ℓ/min] (ANR)[Note 3]	Response time[Note 2] (ms): Standard: 0.4 W	High-speed response: 0.95 W	Weight (g)
VQC1000	2-position	Single	Metal seal	VQC1100	0.70	0.15	0.16	163	0.72	0.25	0.18	178	15 or less	12 or less	67
			Rubber seal	VQC1101	0.85	0.20	0.21	204	1.0	0.30	0.25	254	20 or less	15 or less	
		Double	Metal seal	VQC1200	0.70	0.15	0.16	163	0.72	0.25	0.18	178	13 or less	10 or less	77
			Rubber seal	VQC1201	0.85	0.20	0.21	204	1.0	0.30	0.25	254	20 or less	15 or less	
	3-position	Closed centre	Metal seal	VQC1300	0.68	0.15	0.16	158	0.72	0.25	0.18	178	26 or less	20 or less	
			Rubber seal	VQC1301	0.70	0.20	0.16	168	0.65	0.42	0.18	179	33 or less	25 or less	
		Exhaust centre	Metal seal	VQC1400	0.68	0.15	0.16	158	0.72	0.25	0.18	178	26 or less	20 or less	
			Rubber seal	VQC1401	0.70	0.20	0.16	168	1.0	0.30	0.25	254	33 or less	25 or less	
		Pressure centre	Metal seal	VQC1500	0.70	0.15	0.16	163	0.72	0.25	0.18	178	26 or less	20 or less	
			Rubber seal	VQC1501	0.85	0.20	0.21	204	0.65	0.42	0.18	179	33 or less	25 or less	
	4-position	Dual 3-port valve	Rubber seal	VQC1A/B/C01	0.70	0.20	0.16	168	0.70	0.20	0.16	168	33 or less	25 or less	
VQC2000	2-position	Single	Metal seal	VQC2100	2.0	0.15	0.46	466	2.6	0.15	0.60	606	29 or less	22 or less	95
			Rubber seal	VQC2101	2.2	0.28	0.55	552	3.2	0.30	0.80	814	31 or less	24 or less	
		Double	Metal seal	VQC2200	2.0	0.15	0.46	466	2.6	0.15	0.60	606	20 or less	15 or less	105
			Rubber seal	VQC2201	2.2	0.28	0.55	552	3.2	0.30	0.80	814	26 or less	20 or less	
	3-position	Closed centre	Metal seal	VQC2300	2.0	0.15	0.46	466	2.0	0.18	0.46	474	38 or less	29 or less	
			Rubber seal	VQC2301	2.0	0.28	0.49	502	2.2	0.31	0.60	563	44 or less	34 or less	
		Exhaust centre	Metal seal	VQC2400	2.0	0.15	0.46	466	2.6	0.15	0.60	606	38 or less	29 or less	
			Rubber seal	VQC2401	2.0	0.28	0.49	502	3.2	0.30	0.80	814	44 or less	34 or less	
		Pressure centre	Metal seal	VQC2500	2.4	0.17	0.57	565	2.0	0.18	0.46	474	38 or less	29 or less	
			Rubber seal	VQC2501	3.2	0.28	0.80	804	2.2	0.31	0.60	563	44 or less	34 or less	
	4-position	Dual 3-port valve	Rubber seal	VQC2A/B/C01	1.8	0.28	0.46	452	1.8	0.28	0.46	452	44 or less	34 or less	

Note 1) Values represented in this column are in the following conditions:
VQC1000: Cylinder port size C6 without a back pressure check valve
VQC2000: Cylinder port size C8 without a back pressure check valve

Note 2) Values represented in this column are based on JIS B 8375-1981 (operating with clean air and a supply pressure of 0.5 MPa. Equipped with light/surge voltage suppressor. Values vary depending on the pressure as well as the air quality.) Values for double type are when the switch is turned ON.

Note 3) These values have been calculated according to ISO6358 and indicate the flow rate under standard conditions with an inlet pressure of 0.6 MPa (relative pressure) and a pressure drop of 0.1 MPa.

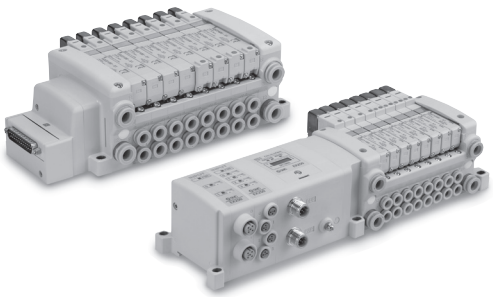

Standard Specifications

Valve specifications	Valve type		Metal seal	Rubber seal
	Fluid		Air	
	Maximum operating pressure		0.7 MPa (High-pressure type: 1.0 MPa)	0.7 MPa
	Minimum operating pressure	Single	0.1 MPa	0.15 MPa
		Double	0.1 MPa	
		3-position	0.1 MPa	0.2 MPa
		4-position	——	0.15 MPa
	Ambient and fluid temperature		–10 to 50°C Note 1)	
	Lubrication		Not required	
	Manual override		Push type, Locking type (Tool required) semi-standard	
	Impact/Vibration resistance		150/30 m/s² Note 2)	
	Enclosure		Dustproof (IP67 compatible) Note 3)	
Electrical specifications	Rated coil voltage		24 VDC	
	Allowable voltage fluctuation		±10% of rated voltage	
	Coil insulation type		Equivalent to Class B	
	Power consumption (Current)	24 VDC	0.4 W DC (17 mA), 0.95 W DC (40 mA) Note 4)	
		12 VDC	0.4 W DC (34 mA), 0.95 W DC (80 mA) Note 4)	

Note 1) Use dry air to prevent condensation when operating at low temperatures.
Note 2) Impact resistance ····· No malfunction resulted from the impact test using a drop impact tester. Test was performed one time each in the axial and right angle directions of the main valve and armature for both energized and de-energized states.
Vibration resistance ··· No malfunction occurred in a one-sweep test between 45 and 2000 Hz. Test was performed in the axial and right angle directions of the main valve and armature for both energized and de-energized states.
Note 3) Refer to page 1 and 2 for applicable variations.
Note 4) Value for high-speed response, high-pressure type (0.95 W)

Manifold Specifications

Series	Base model	Connection type	Piping specifications			Applicable stations Note 2)	Applicable solenoid valves	5-station weight (g)
			Port direction	Port size Note 1)				
				1, 3 (P, R)	2, 4 (A, B)			
VQC1000	VV5QC11-□□□	F kit: D-sub connector P kit: Flat ribbon cable T kit: Terminal block box S kit: Serial transmission L kit: Lead wire M kit: Circular connector	Side	C8 (ø8) Option: Direct EXH outlet with built-in silencer	C3 (ø3.2) C4 (ø4) C6 (ø6) M5 (M5 thread)	F/L/M/P kit 1 to 12 stations T kit 1 to 10 stations S kit 1 to 8 stations: EX500 1 to 12 stations: EX250	VQC1□00-5 VQC1□01-5	643 (Single) 754 (Double, 3-position)
VQC2000	VV5QC21-□□□		Side	C10 (ø10) Option: Direct EXH outlet with built-in silencer Branch type C12 (ø12)	C4 (ø4) C6 (ø6) C8 (ø8)		VQC2□00-5 VQC2□01-5	1076 (Single) 1119 (Double, 3-position)

Note 1) Inch-size one-touch fittings are also available.
Note 2) Special wiring specifications are available as semi-standard to increase the maximum number of stations.

S Series VQC1000

Kit (Serial transmission) For EX500 Gateway Decentralised System 2 (128 points) **IP67 compliant**

VV5QC11
S kit (Serial transmission kit: EX500)

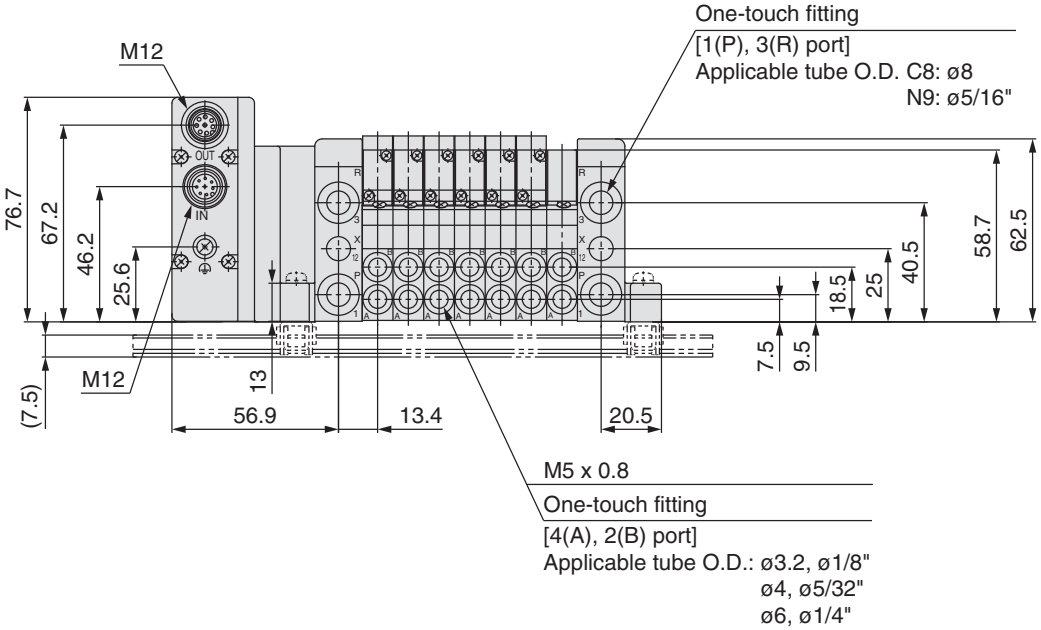

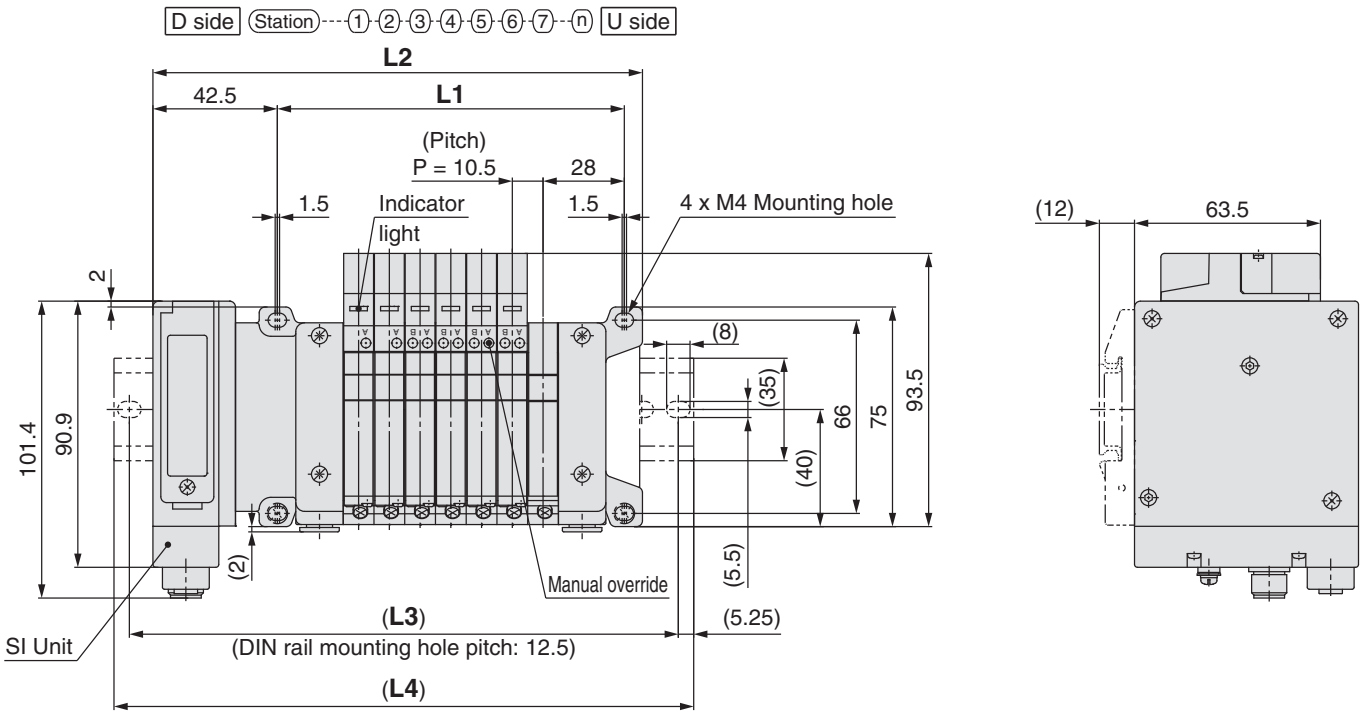

L: Dimensions

n: Stations

L \ n	1	2	3	4	5	6	7	8	9	10	11	12	13	14	15
L1	55.5	66	76.5	87	97.5	108	118.5	129	139.5	150	160.5	171	181.5	192	202.5
L2	104.2	114.7	125.2	135.7	146.2	156.7	167.2	177.7	188.2	198.7	209.2	219.7	230.2	240.7	251.2
L3	125	137.5	150	162.5	175	187.5	187.5	200	212.5	225	237.5	250	250	262.5	275
L4	135.5	148	160.5	173	185.5	198	198	210.5	223	235.5	248	260.5	260.5	273	285.5

L \ n	16	17	18	19	20	21	22	23	24
L1	213	223.5	234	244.5	255	265.5	276	286.5	297
L2	261.7	272.2	282.7	293.2	303.7	314.2	324.7	335.2	345.7
L3	287.5	300	312.5	325	325	337.5	350	362.5	375
L4	298	310.5	323	335.5	335.5	348	360.5	373	385.5

S Series VQC2000

Kit (Serial transmission) For EX500 Gateway Decentralised System 2 (128 points) IP67 compliant

VV5QC21
S kit (Serial transmission kit: EX500)

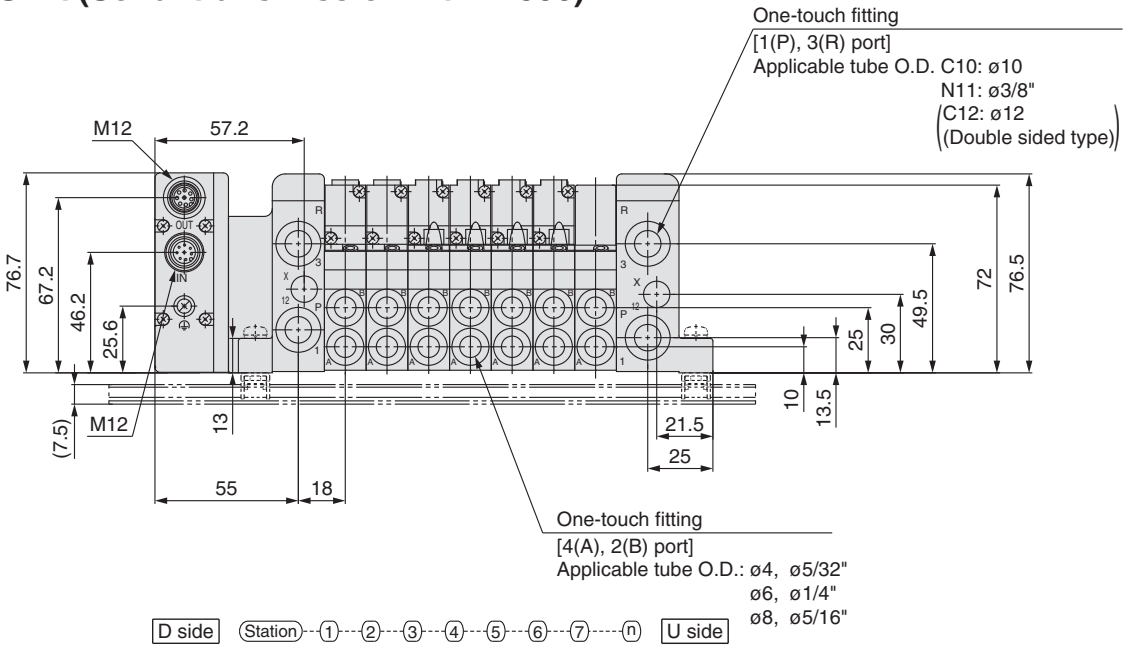

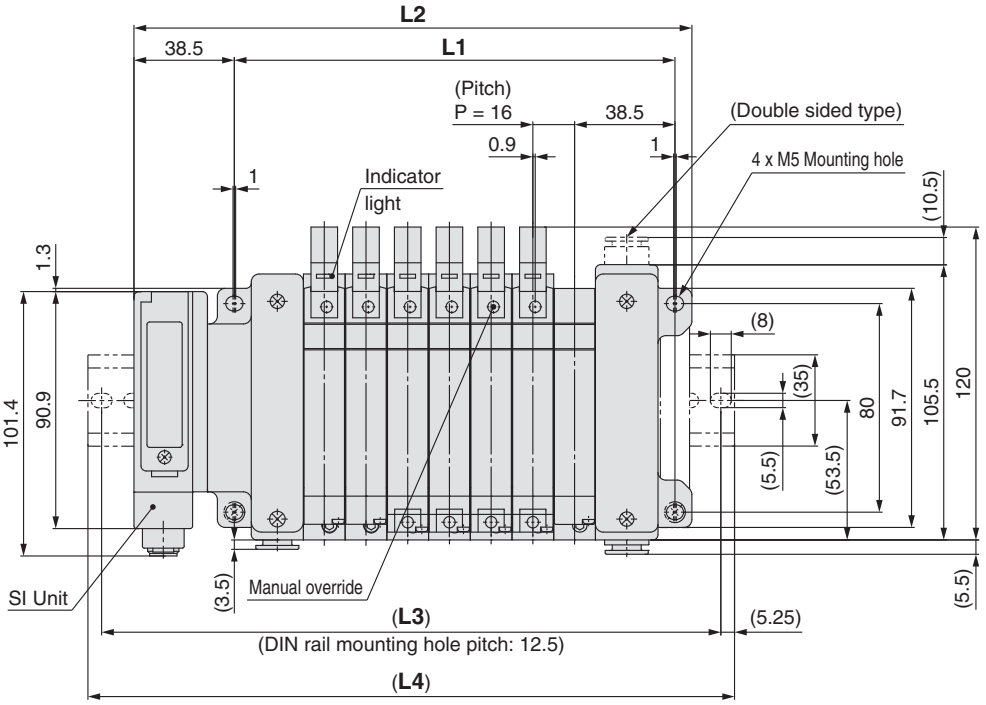

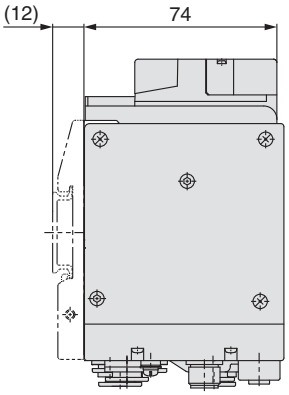

L: Dimensions

n: Stations

L \ n	1	2	3	4	5	6	7	8	9	10	11	12	13	14	15
L1	73	89	105	121	137	153	169	185	201	217	233	249	265	281	297
L2	118	134	150	166	182	198	214	230	246	262	278	294	310	326	342
L3	137.5	162.5	175	187.5	212.5	225	237.5	250	275	287.5	300	325	337.5	350	362.5
L4	148	173	185.5	198	223	235.5	248	260.5	285.5	298	310.5	335.5	348	360.5	373

L \ n	16	17	18	19	20	21	22	23	24
L1	313	329	345	361	377	393	409	425	441
L2	358	374	390	406	422	438	454	470	486
L3	387.5	400	412.5	437.5	450	462.5	475	500	512.5
L4	398	410.5	423	448	460.5	473	485.5	510.5	523

S Series VQC1000

kit (Serial transmission) For EX500 Gateway Decentralised System (64 points) IP67 compliant

VV5QC11
S kit (Serial transmission kit: EX500)

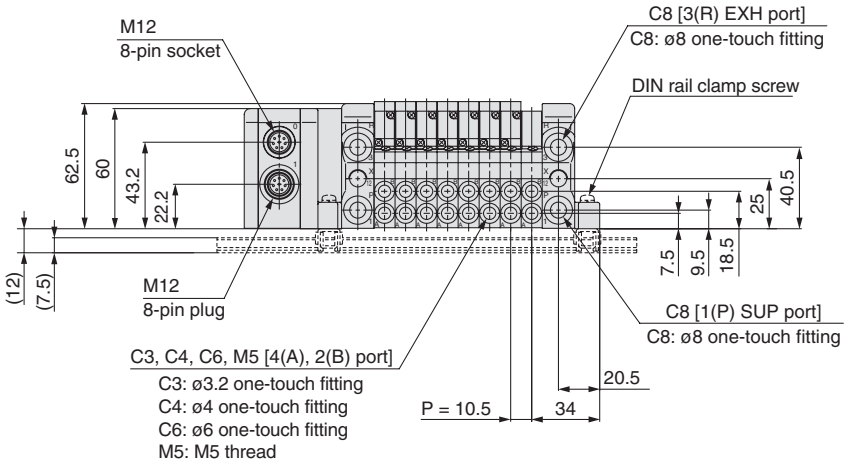

D side Stations ①②③④⑤⑥⑦⑧ⓝ U side

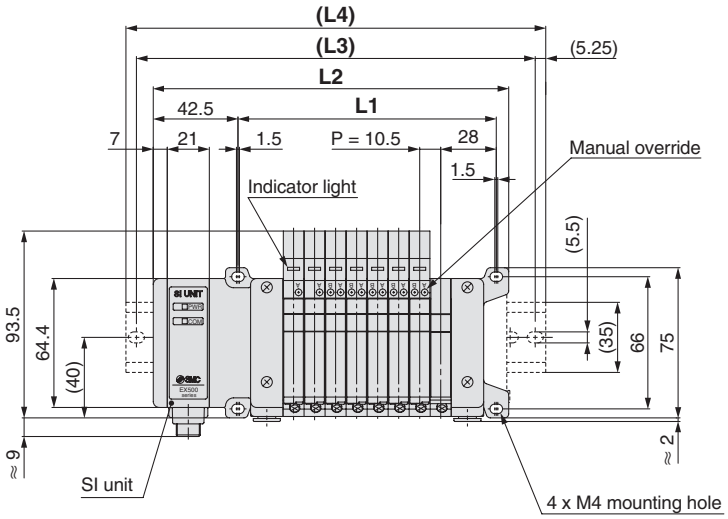

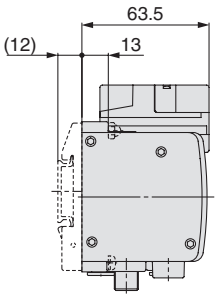

The dashed lines indicate DIN rail mounting [-D] (with DIN rail mounting bracket).

Formula: L1 = 10.5n + 45, L2 = 10.5n + 93.5 n: Stations (Maximum 16 stations)

L \ n	1	2	3	4	5	6	7	8	9	10	11	12	13	14	15	16
L1	55.5	66	76.5	87	97.5	108	118.5	129	139.5	150	160.5	171	181.5	192	202.5	213
L2	104	114.5	125	135.5	146	156.5	167	177.5	188	198.5	209	219.5	230	240.5	251	261.5
L3	125	137.5	150	162.5	175	187.5	187.5	200	212.5	225	237.5	250	250	262.5	275	287.5
L4	135.5	148	160.5	173	185.5	198	198	210.5	223	235.5	248	260.5	260.5	273	285.5	298

S Series VQC2000
kit (Serial transmission) For EX500 Gateway Decentralised System (64 points) IP67 compliant

VV5QC21
S kit (Serial transmission kit: EX500)

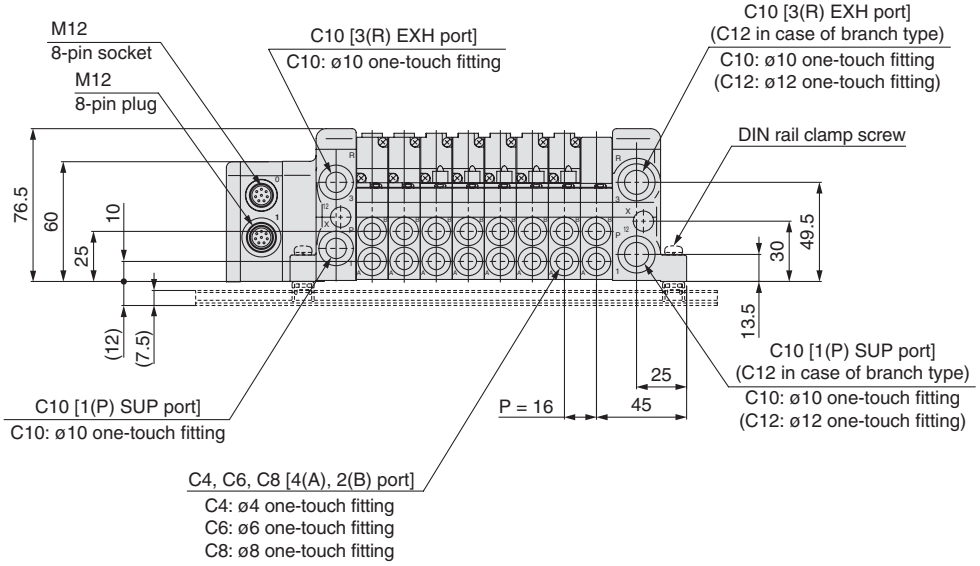

D side (Stations) 1 2 3 4 5 6 7 8 n U side

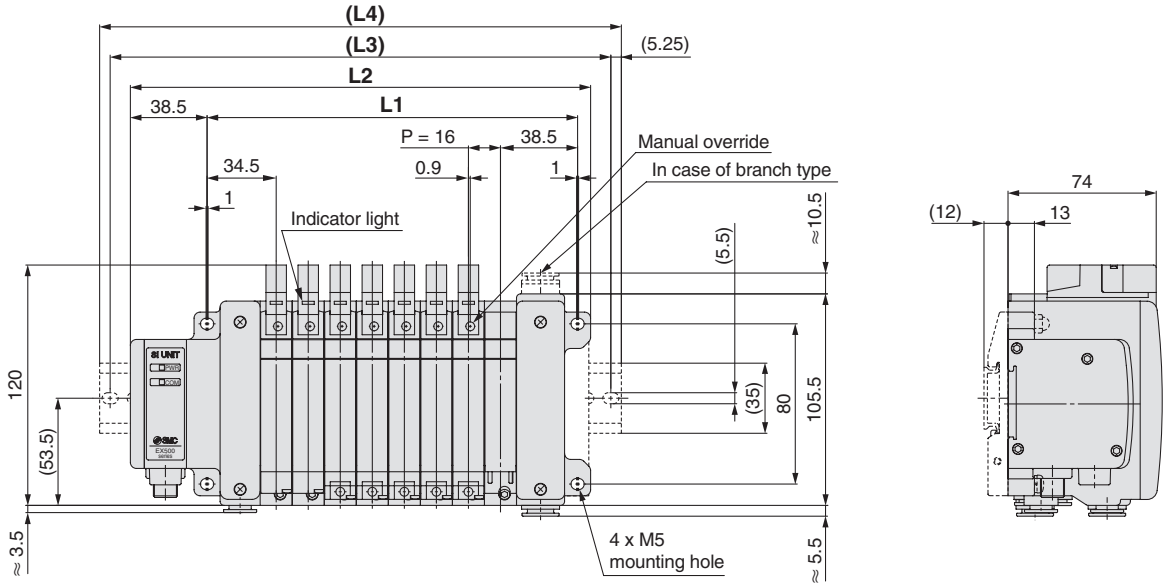

The dashed lines indicate DIN rail mounting [-D] (with DIN rail mounting bracket).

Formula: L1 = 16n + 57, L2 = 16n + 102 n: Stations (Maximum 16 stations)

L \ n	1	2	3	4	5	6	7	8	9	10	11	12	13	14	15	16
L1	73	89	105	121	137	153	169	185	201	217	233	249	265	281	297	313
L2	118	134	150	166	182	198	214	230	246	262	278	294	310	326	342	358
L3	162.5	150	175	187.5	212.5	225	237.5	250	275	287.5	300	325	337.5	350	362.5	387.5
L4	173	160.5	185.5	198	223	235.5	248	260.5	285.5	298	310.5	335.5	348	360.5	373	398

S Series VQC1000

kit (Serial transmission) For EX600 Integrated-type (I/O) serial transmission system **IP67 compliant**

VV5QC11
S kit (Serial transmission kit: EX600)
Power supply with M12 connector

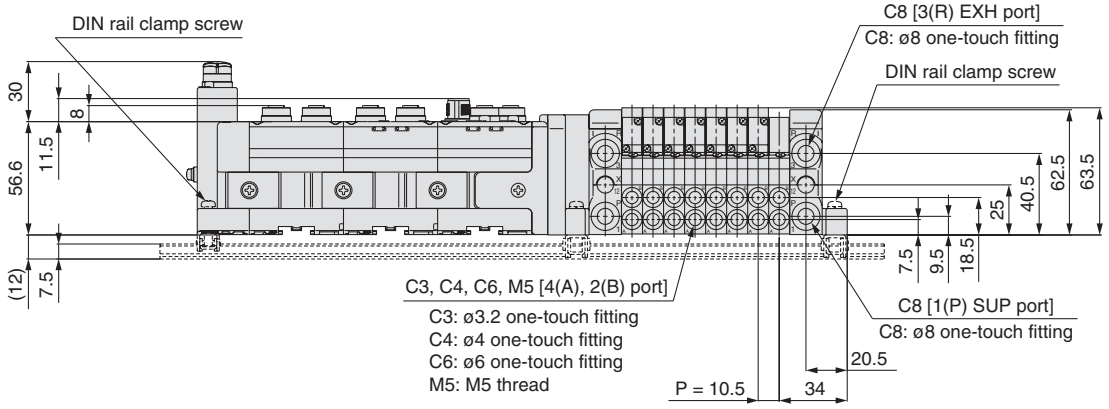

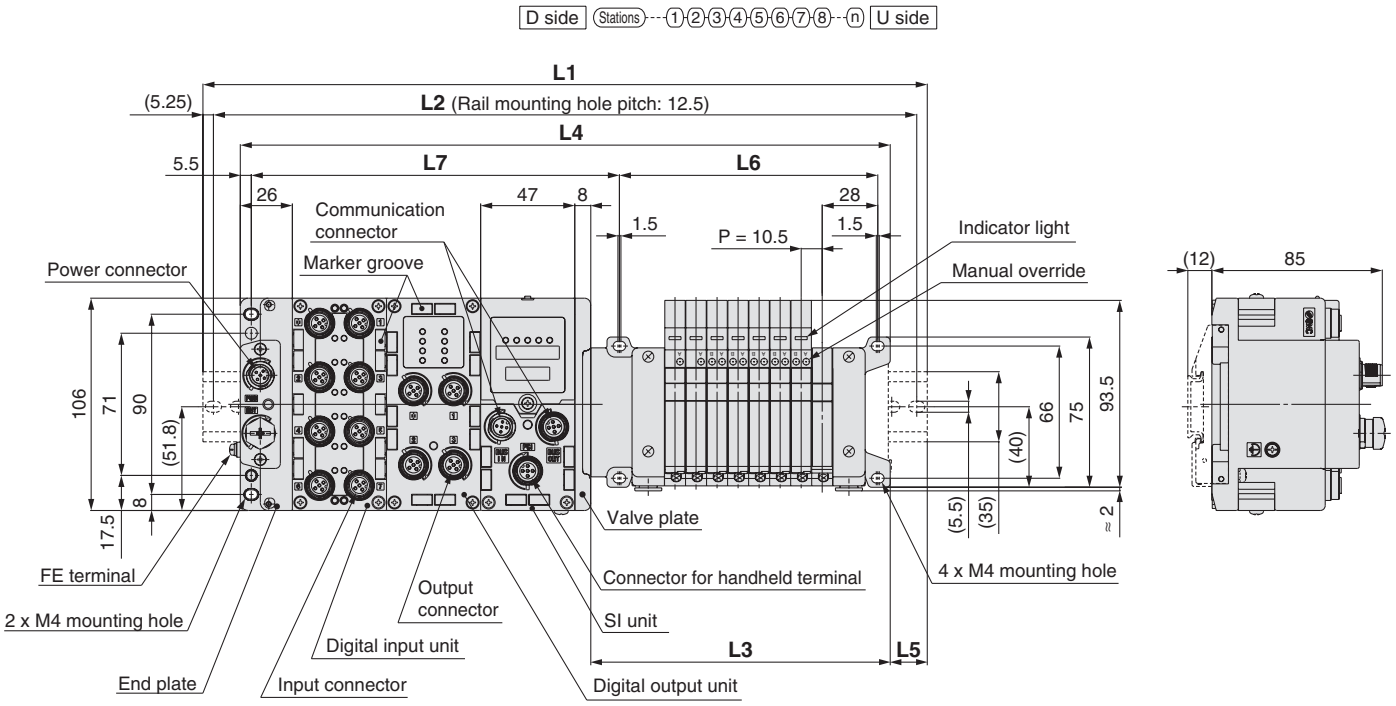

L2 = L1 – 10.5
L3 = 10.5 x n1 + 65.5
L4 = L3 + 81 + 47 x n2
L5 = (L1 – L4)/2
L6 = 10.5 x n1 + 45
L7 = 47 x n2 + 89.8

L1: DIN Rail Full Length

I/O unit stations (n2) \ Valve stations (n1)	1	2	3	4	5	6	7	8	9	10	11	12	13	14	15	16	17	18	19	20	21	22	23	24
0	198	198	210.5	223	235.5	248	260.5	260.5	273	285.5	298	310.5	323	335.5	335.5	348	360.5	373	385.5	398	398	410.5	423	435.5
1	235.5	248	260.5	273	285.5	298	298	310.5	323	335.5	348	360.5	360.5	373	385.5	398	410.5	423	423	435.5	448	460.5	473	485.5
2	285.5	298	310.5	323	323	335.5	348	360.5	373	385.5	398	398	410.5	423	435.5	448	460.5	460.5	473	485.5	498	510.5	523	523
3	335.5	348	360.5	360.5	373	385.5	398	410.5	423	423	435.5	448	460.5	473	485.5	485.5	498	510.5	523	535.5	548	560.5	560.5	573
4	385.5	385.5	398	410.5	423	435.5	448	460.5	460.5	473	485.5	498	510.5	523	523	535.5	548	560.5	573	585.5	585.5	598	610.5	623
5	423	435.5	448	460.5	473	485.5	485.5	498	510.5	523	535.5	548	548	560.5	573	585.5	598	610.5	623	623	635.5	648	660.5	673
6	473	485.5	498	510.5	523	523	535.5	548	560.5	573	585.5	585.5	598	610.5	623	635.5	648	648	660.5	673	685.5	698	710.5	710.5
7	523	535.5	548	548	560.5	573	585.5	598	610.5	610.5	623	635.5	648	660.5	673	685.5	685.5	698	710.5	723	735.5	748	748	760.5
8	573	585.5	585.5	598	610.5	623	635.5	648	648	660.5	673	685.5	698	710.5	710.5	723	735.5	748	760.5	773	773	785.5	798	810.5
9	610.5	623	635.5	648	660.5	673	673	685.5	698	710.5	723	735.5	748	748	760.5	773	785.5	798	810.5	810.5	823	835.5	848	860.5

S Series VQC1000

kit (Serial transmission) For EX600 Integrated-type (I/O) serial transmission system IP67 compliant

VV5QC11
S kit (Serial transmission kit: EX600)
Power supply with 7/8 inch connector

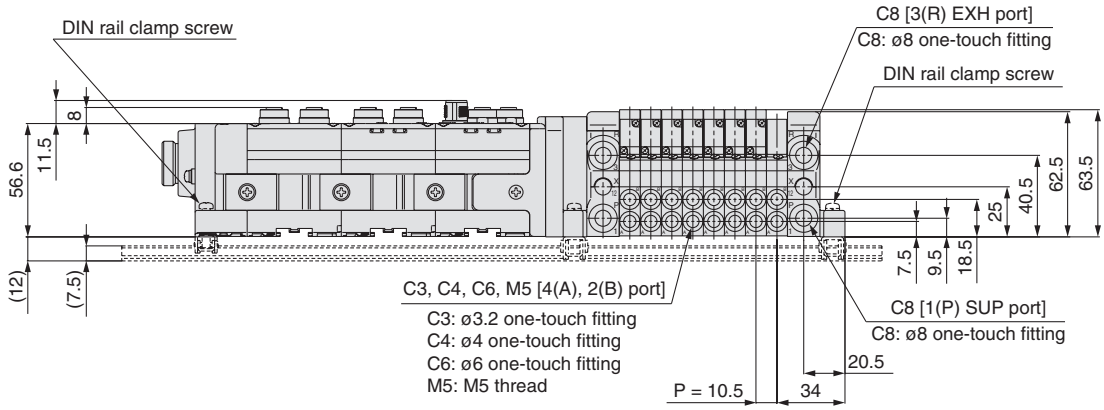

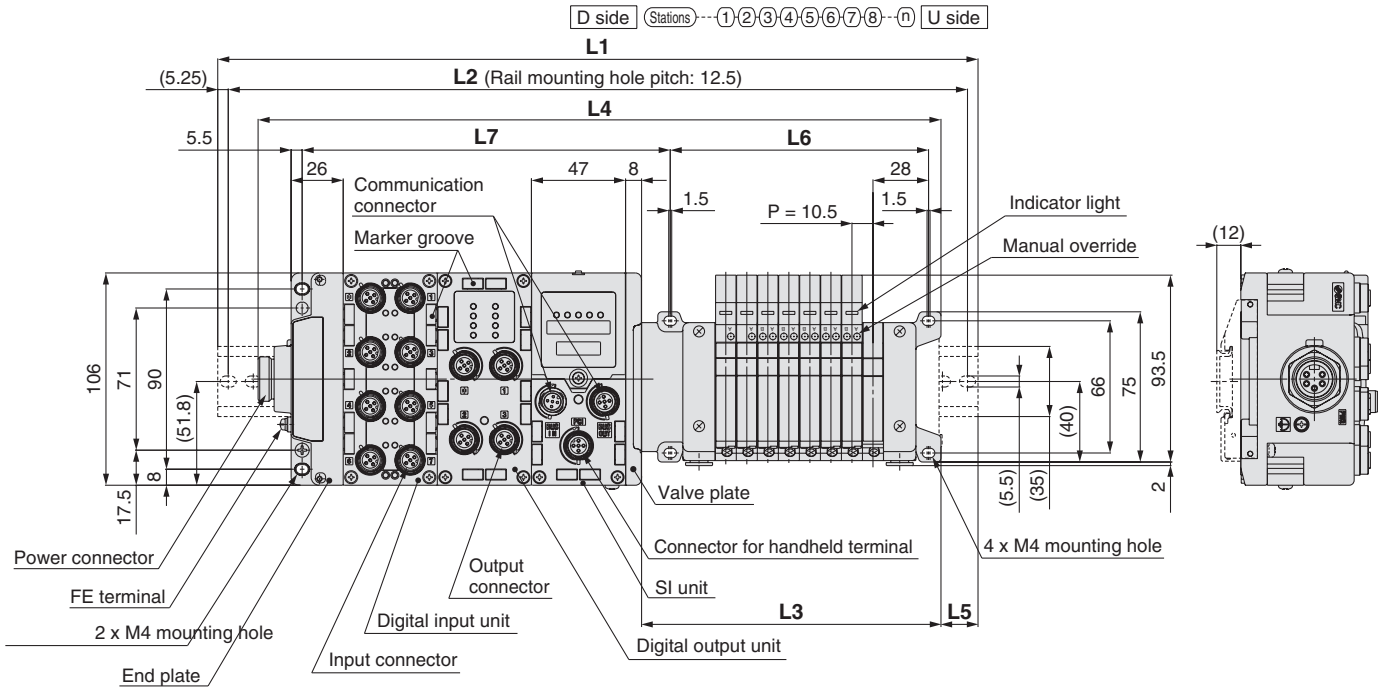

L2 = L1 – 10.5
L3 = 10.5 x n1 + 65.5
L4 = L3 + 97.5 + 47 x n2
L5 = (L1 – L4)/2
L6 = 10.5 x n1 + 45
L7 = 47 x n2 + 89.8

L1: DIN Rail Full Length

I/O unit stations (n2) \ Valve stations (n1)	1	2	3	4	5	6	7	8	9	10	11	12	13	14	15	16	17	18	19	20	21	22	23	24
0	210.5	223	235.5	235.5	248	260.5	273	285.5	298	298	310.5	323	335.5	348	360.5	373	373	385.5	398	410.5	423	435.5	435.5	448
1	260.5	273	273	285.5	298	310.5	323	335.5	335.5	348	360.5	373	385.5	398	398	410.5	423	435.5	448	460.5	460.5	473	485.5	498
2	298	310.5	323	335.5	348	360.5	360.5	373	385.5	398	410.5	423	435.5	435.5	448	460.5	473	485.5	498	498	510.5	523	535.5	548
3	348	360.5	373	385.5	398	398	410.5	423	435.5	448	460.5	460.5	473	485.5	498	510.5	523	523	535.5	548	560.5	573	585.5	598
4	398	410.5	423	423	435.5	448	460.5	473	485.5	498	498	510.5	523	535.5	548	560.5	560.5	573	585.5	598	610.5	623	623	635.5
5	448	460.5	460.5	473	485.5	498	510.5	523	523	535.5	548	560.5	573	585.5	585.5	598	610.5	623	635.5	648	660.5	660.5	673	685.5
6	485.5	498	510.5	523	535.5	548	560.5	560.5	573	585.5	598	610.5	623	623	635.5	648	660.5	673	685.5	685.5	698	710.5	723	735.5
7	535.5	548	560.5	573	585.5	585.5	598	610.5	623	635.5	648	648	660.5	673	685.5	698	710.5	723	723	735.5	748	760.5	773	785.5
8	585.5	598	610.5	623	623	635.5	648	660.5	673	685.5	685.5	698	710.5	723	735.5	748	748	760.5	773	785.5	798	810.5	810.5	823
9	635.5	648	648	660.5	673	685.5	698	710.5	710.5	723	735.5	748	760.5	773	785.5	785.5	798	810.5	823	835.5	848	848	860.5	873

S Series VQC2000

kit (Serial transmission) For EX600 Integrated-type (I/O) serial transmission system

IP67 compliant

VV5QC21
S kit (Serial transmission kit: EX600)
Power supply with M12 connector

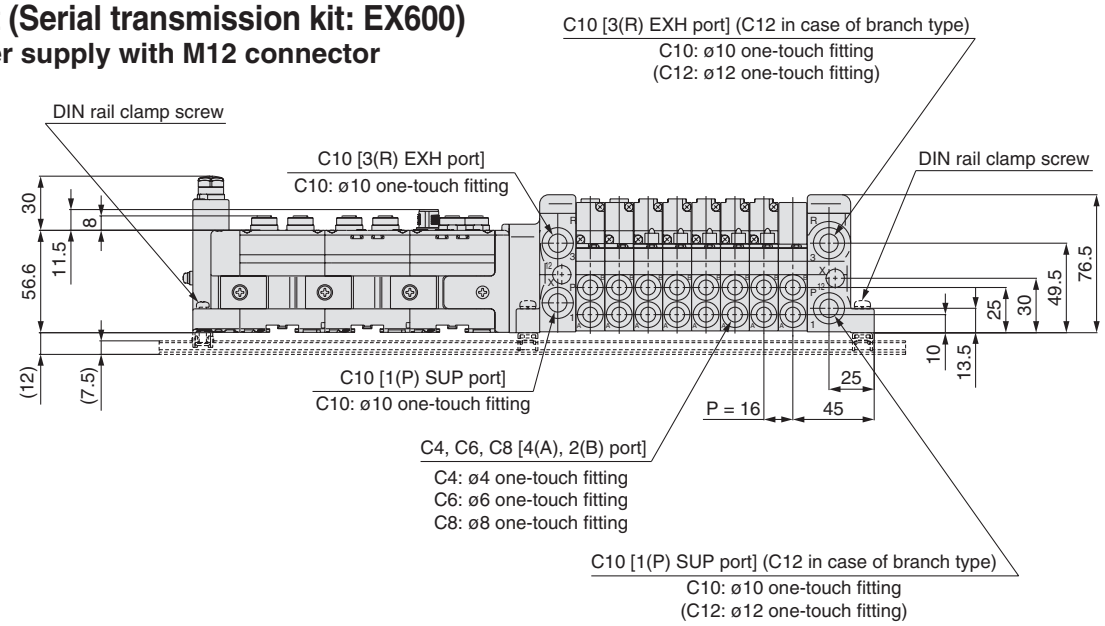

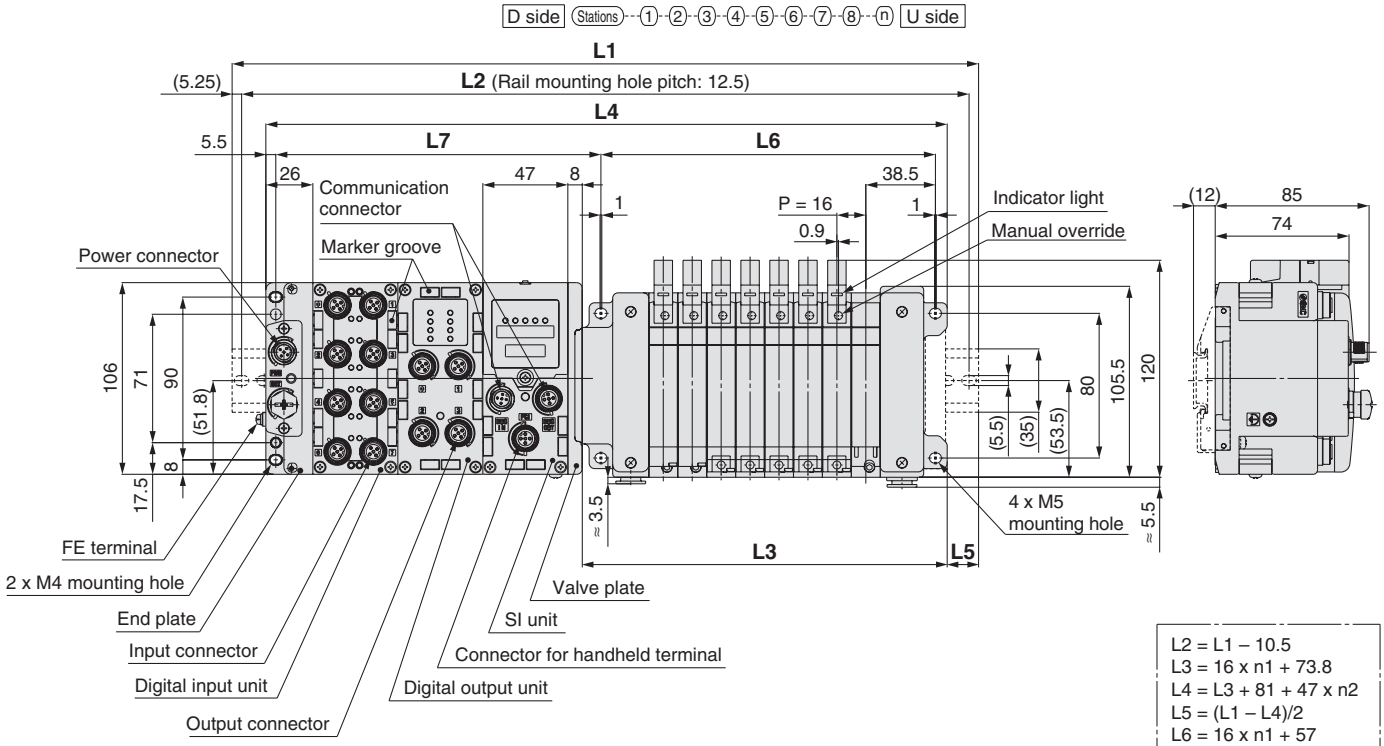

L2 = L1 – 10.5
L3 = 16 x n1 + 73.8
L4 = L3 + 81 + 47 x n2
L5 = (L1 – L4)/2
L6 = 16 x n1 + 57
L7 = 47 x n2 + 85.8

L1: DIN Rail Full Length

I/O unit stations (n2) \ Valve stations (n1)	1	2	3	4	5	6	7	8	9	10	11	12	13	14	15	16	17	18	19	20	21	22	23	24
0	210.5	223	235.5	260.5	273	285.5	298	323	335.5	348	373	385.5	398	410.5	435.5	448	460.5	473	498	510.5	523	548	560.5	573
1	248	273	285.5	298	323	335.5	348	360.5	385.5	398	410.5	435.5	448	460.5	473	498	510.5	523	548	560.5	573	585.5	610.5	623
2	298	323	335.5	348	360.5	385.5	398	410.5	423	448	460.5	473	498	510.5	523	535.5	560.5	573	585.5	610.5	623	635.5	648	673
3	348	360.5	385.5	398	410.5	423	448	460.5	473	498	510.5	523	535.5	560.5	573	585.5	598	623	635.5	648	673	685.5	698	710.5
4	398	410.5	423	448	460.5	473	485.5	510.5	523	535.5	560.5	573	585.5	598	623	635.5	648	673	685.5	698	710.5	735.5	748	760.5
5	448	460.5	473	485.5	510.5	523	535.5	548	573	585.5	598	623	635.5	648	660.5	685.5	698	710.5	735.5	748	760.5	773	798	810.5
6	485.5	510.5	523	535.5	548	573	585.5	598	623	635.5	648	660.5	685.5	698	710.5	723	748	760.5	773	798	810.5	823	835.5	860.5
7	535.5	548	573	585.5	598	610.5	635.5	648	660.5	685.5	698	710.5	723	748	760.5	773	798	810.5	823	835.5	860.5	873	885.5	898
8	585.5	598	610.5	635.5	648	660.5	673	698	710.5	723	748	760.5	773	785.5	810.5	823	835.5	860.5	873	885.5	898	923	935.5	948
9	635.5	648	660.5	673	698	710.5	723	748	760.5	773	785.5	810.5	823	835.5	848	873	885.5	898	923	935.5	948	960.5	985.5	985.5

S Series VQC2000

kit (Serial transmission) For EX600 Integrated-type (I/O) serial transmission system IP67 compliant

VV5QC21
S kit (Serial transmission kit: EX600)
Power supply with 7/8 inch connector

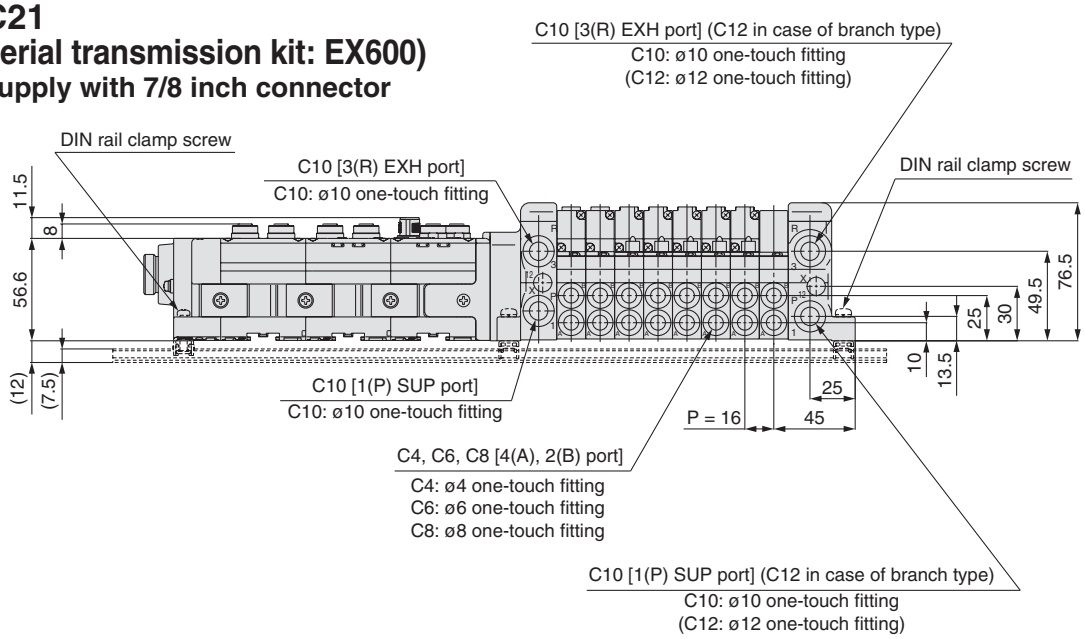

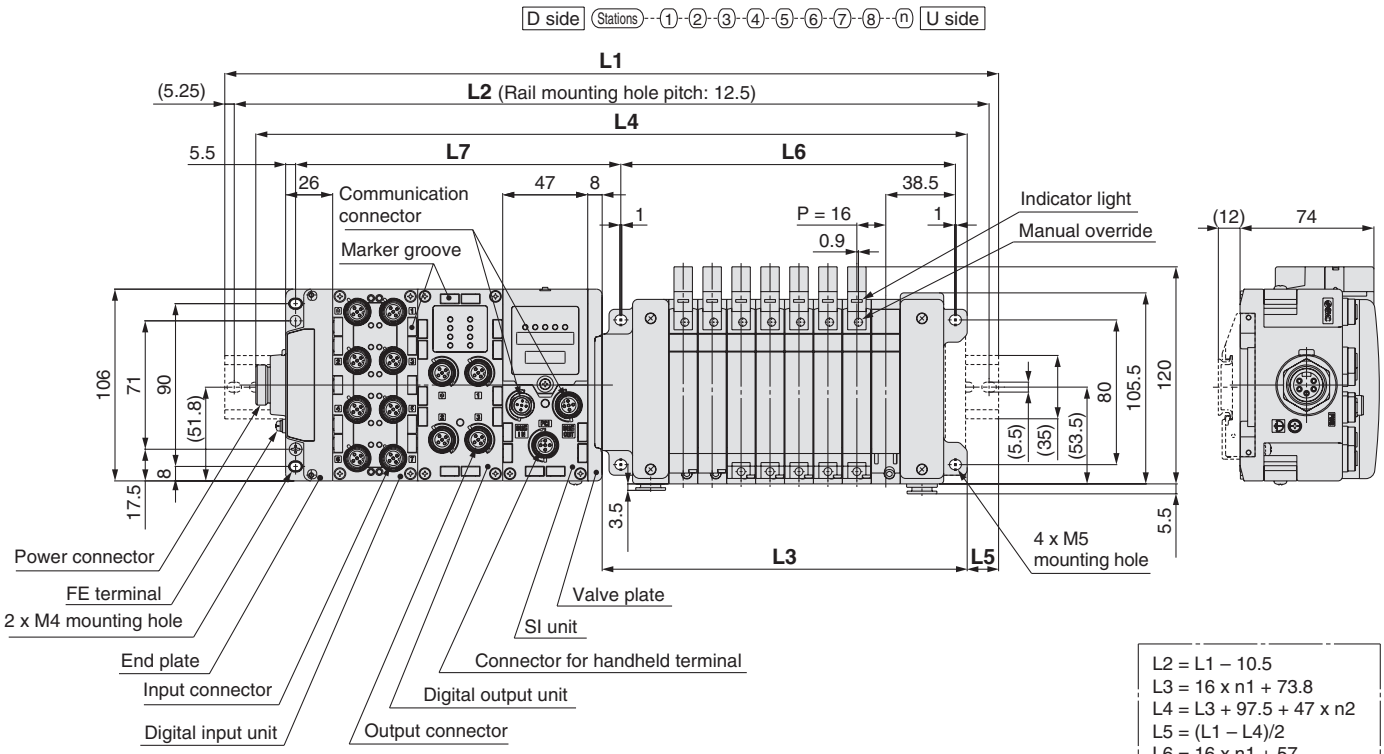

L2 = L1 – 10.5
L3 = 16 x n1 + 73.8
L4 = L3 + 97.5 + 47 x n2
L5 = (L1 – L4)/2
L6 = 16 x n1 + 57
L7 = 47 x n2 + 85.8

L1: DIN Rail Full Length

I/O unit stations (n2) \ Valve stations (n1)	1	2	3	4	5	6	7	8	9	10	11	12	13	14	15	16	17	18	19	20	21	22	23	24
0	223	235.5	260.5	273	285.5	298	323	335.5	348	373	385.5	398	410.5	435.5	448	460.5	485.5	498	510.5	523	548	560.5	573	585.5
1	273	285.5	298	323	335.5	348	360.5	385.5	398	410.5	435.5	448	460.5	473	498	510.5	523	548	560.5	573	585.5	610.5	623	635.5
2	323	335.5	348	360.5	385.5	398	410.5	435.5	448	460.5	473	498	510.5	523	535.5	560.5	573	585.5	610.5	623	635.5	648	673	685.5
3	360.5	385.5	398	410.5	423	448	460.5	473	498	510.5	523	535.5	560.5	573	585.5	610.5	623	635.5	648	673	685.5	698	710.5	735.5
4	410.5	423	448	460.5	473	485.5	510.5	523	535.5	560.5	573	585.5	598	623	635.5	648	673	685.5	698	710.5	735.5	748	760.5	785.5
5	460.5	473	485.5	510.5	523	535.5	560.5	573	585.5	598	623	635.5	648	660.5	685.5	698	710.5	735.5	748	760.5	773	798	810.5	823
6	510.5	523	535.5	548	573	585.5	598	623	635.5	648	660.5	685.5	698	710.5	735.5	748	760.5	773	798	810.5	823	835.5	860.5	873
7	548	573	585.5	598	610.5	635.5	648	660.5	685.5	698	710.5	723	748	760.5	773	798	810.5	823	835.5	860.5	873	885.5	910.5	923
8	598	610.5	635.5	648	660.5	685.5	698	710.5	723	748	760.5	773	785.5	810.5	823	835.5	860.5	873	885.5	898	923	935.5	948	973
9	648	660.5	673	698	710.5	723	748	760.5	773	785.5	810.5	823	835.5	860.5	873	885.5	898	923	935.5	948	960.5	985.5	985.5	–

S Series VQC1000/2000

kit (Serial transmission) For EX250 Integrated-type (I/O) serial transmission system **IP67 compliant**

VV5QC11
S kit (Serial transmission kit: EX250)

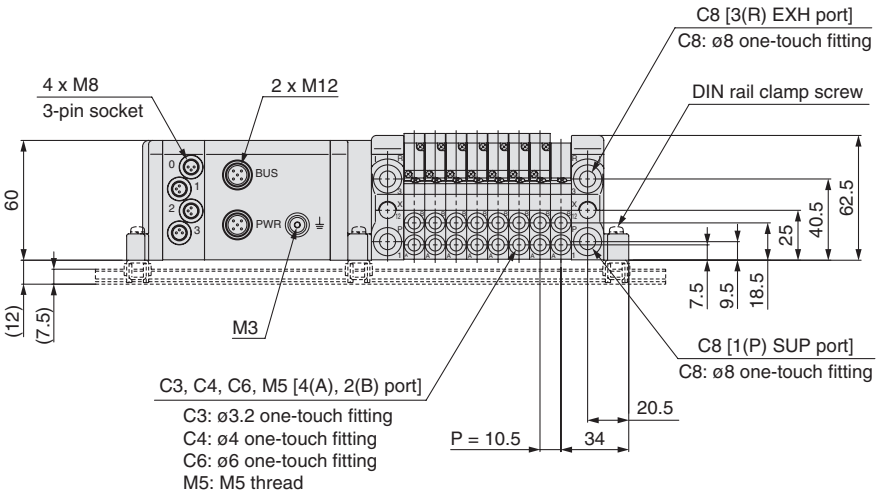

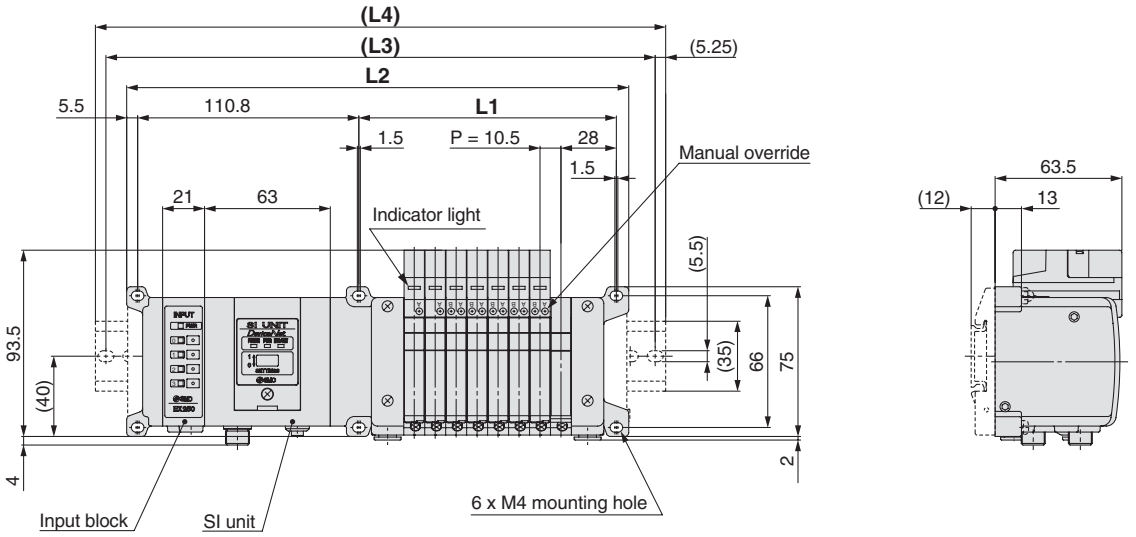

The dashed lines indicate DIN rail mounting [-D] (with DIN rail mounting bracket).

Formula: L1 = 10.5n + 45, L2 = 10.5n + 167.5 (For one input block. Add 21 mm for each additional input block.) n: Stations (Maximum 24 stations)

L \ n	1	2	3	4	5	6	7	8	9	10	11	12	13	14	15	16	17	18	19	20	21	22	23	24
L1	55.5	66	76.5	87	97.5	108	118.5	129	139.5	150	160.5	171	181.5	192	202.5	213	223.5	234	244.5	255	265.5	276	286.5	297
L2	178	188.5	199	209.5	220	230.5	241	251.5	262	272.5	283	293.5	304	314.5	325	335.5	346	356.5	367	377.5	388	398.5	409	419.5
L3	200	212.5	225	237.5	250	250	262.5	275	287.5	300	312.5	325	325	337.5	350	362.5	375	387.5	387.5	400	412.5	425	437.5	450
L4	210.5	223	235.5	248	260.5	260.5	273	285.5	298	310.2	323	335.5	335.5	348	360.5	373	385.5	398	398	410.5	423	435.5	448	460.5

S Series VQC1000

IP40 compliant

Kit (Serial transmission) For EX260 Integrated-type (For Output) Serial Transmission System

IP67 compliant

VV5QC11
S kit (Serial transmission kit: EX260)

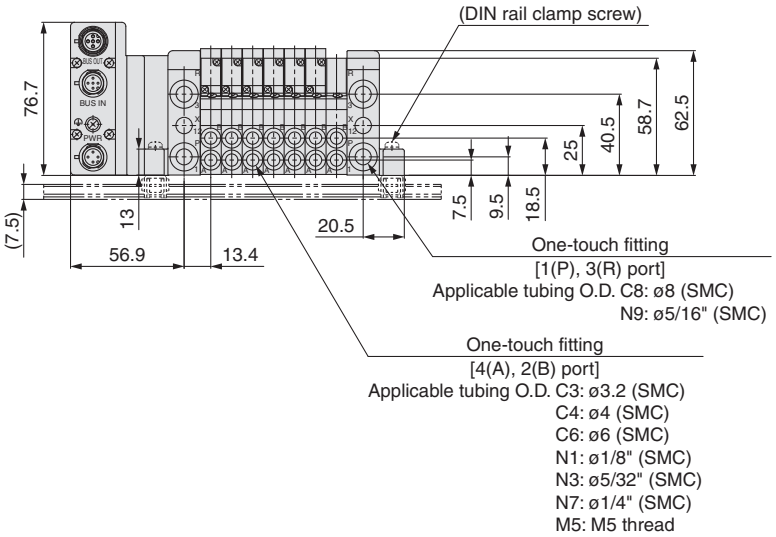

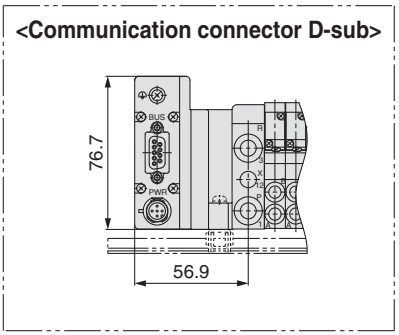

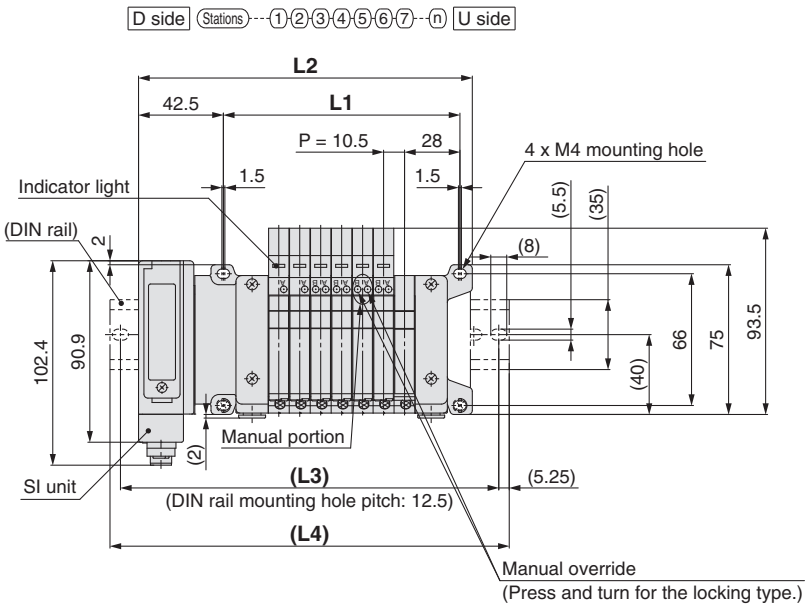

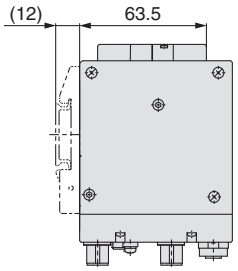

n: Stations (Maximum 24 stations)

L \ n	1	2	3	4	5	6	7	8	9	10	11	12	13	14	15	16	17	18	19	20	21	22	23	24
L1	55.5	66	76.5	87	97.5	108	118.5	129	139.5	150	160.5	171	181.5	192	202.5	213	223.5	234	244.5	255	265.5	276	286.5	297
L2	104.2	114.7	125.2	135.7	146.2	156.7	167.2	177.7	188.2	198.7	209.2	219.7	230.2	240.7	251.2	261.7	272.2	282.7	293.2	303.7	314.2	324.7	335.2	345.7
L3	125	137.5	150	162.5	175	187.5	187.5	200	212.5	225	237.5	250	250	262.5	275	287.5	300	312.5	325	325	337.5	350	362.5	375
L4	135.5	148	160.5	173	185.5	198	198	210.5	223	235.5	248	260.5	260.5	273	285.5	298	310.5	323	335.5	335.5	348	360.5	373	385.5

S Series VQC2000

IP40 compliant

Kit (Serial transmission) For EX260 Integrated-type (For Output) Serial Transmission System

IP67 compliant

VV5QC21
S kit (Serial transmission kit: EX260)

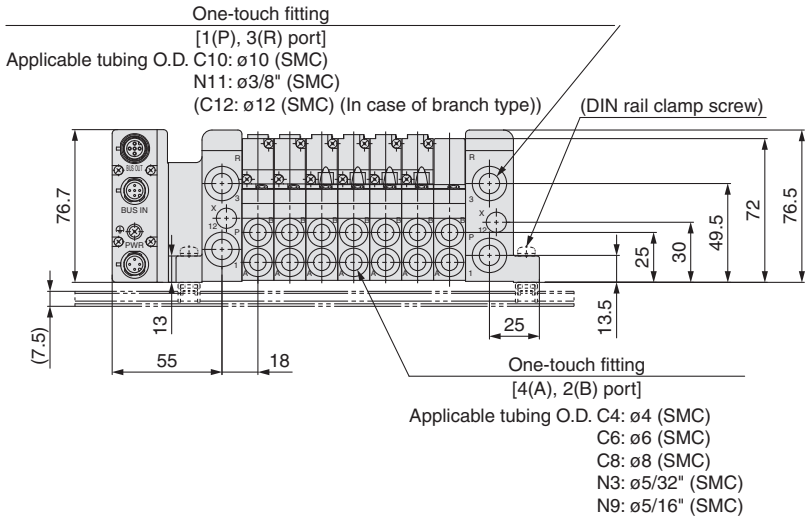

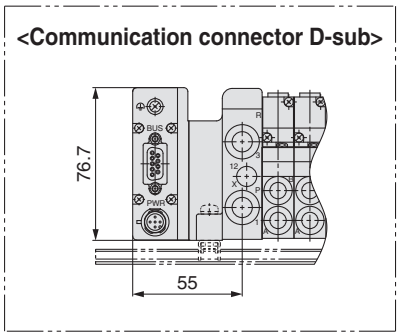

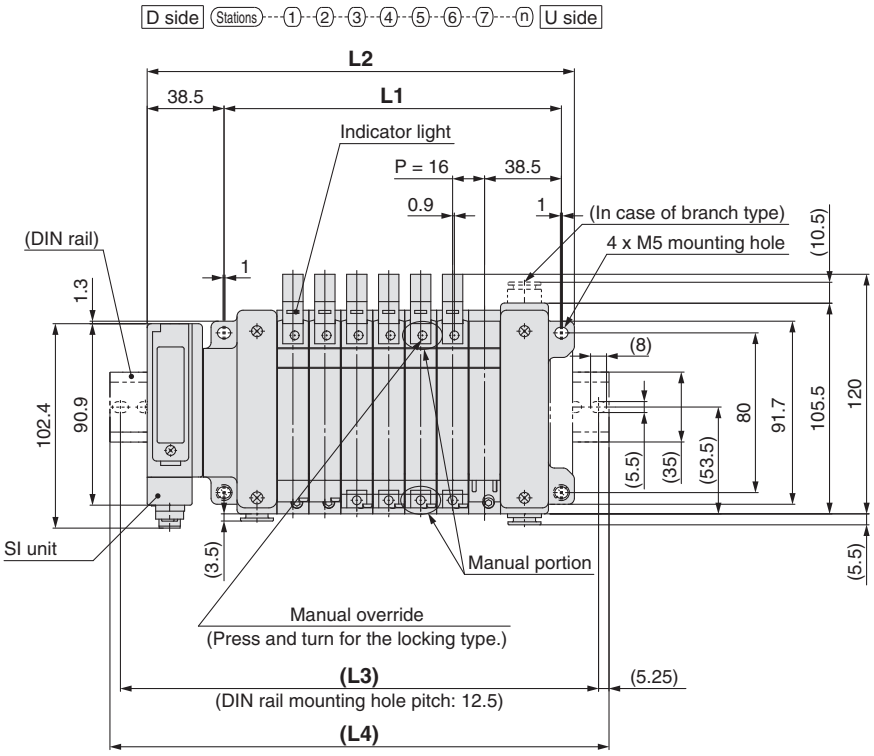

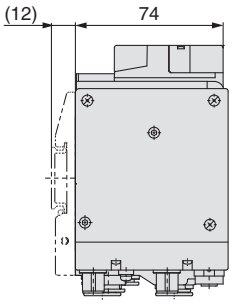

n: Stations (Maximum 24 stations)

L \ n	1	2	3	4	5	6	7	8	9	10	11	12	13	14	15	16	17	18	19	20	21	22	23	24
L1	73	89	105	121	137	153	169	185	201	217	233	249	265	281	297	313	329	345	361	377	393	409	425	441
L2	118	134	150	166	182	198	214	230	246	262	278	294	310	326	342	358	374	390	406	422	438	454	470	486
L3	137.5	162.5	175	187.5	212.5	225	237.5	250	275	287.5	300	325	337.5	350	362.5	387.5	400	412.5	437.5	450	462.5	475	500	512.5
L4	148	173	185.5	198	223	235.5	248	260.5	285.5	298	310.5	335.5	348	360.5	373	398	410.5	423	448	460.5	473	485.5	510.5	523

S Series VQC1000/2000

kit (Serial transmission) For EX250 Integrated-type (I/O) serial transmission system IP67 compliant

VV5QC21
S kit (Serial transmission kit: EX250)

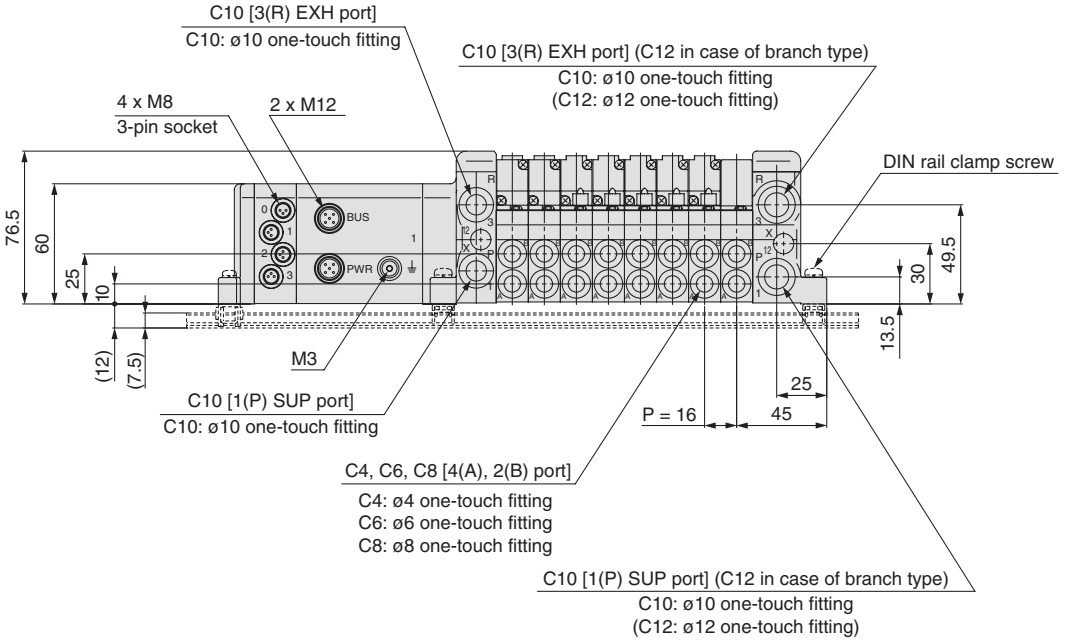

D side (Stations) ① ② ③ ④ ⑤ ⑥ ⑦ ⑧ ⓝ U side

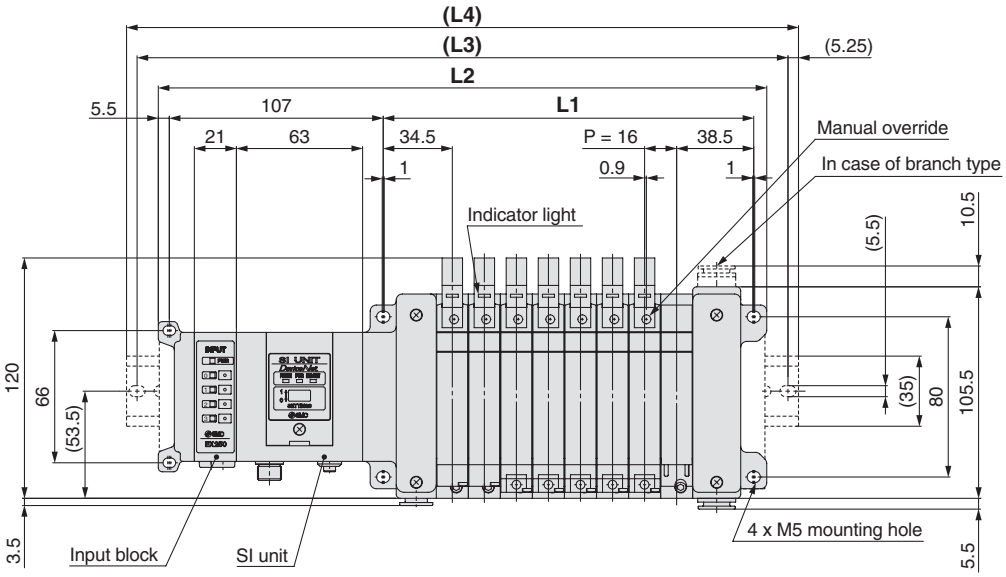

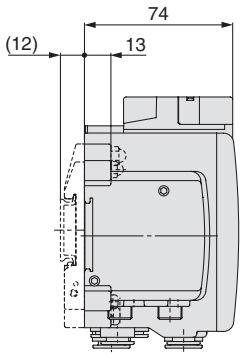

The dashed lines indicate DIN rail mounting [-D] (with DIN rail mounting bracket).

Formula: L1 = 16n + 57, L2 = 16n + 176 (For one input block. Add 21 mm for each additional input block.) n: Stations (Maximum 24 stations)

L \ n	1	2	3	4	5	6	7	8	9	10	11	12	13	14	15	16	17	18	19	20	21	22	23	24
L1	73	89	105	121	137	153	169	185	201	217	233	249	265	281	297	313	329	345	361	377	393	409	425	441
L2	192	208	224	240	256	272	288	304	320	336	352	368	384	400	416	432	448	464	480	496	512	528	544	560
L3	212.5	237.5	250	262.5	275	287.5	312.5	325	337.5	362.5	375	387.5	400	425	437.5	450	462.5	487.5	500	512.5	537.5	550	562.5	587.5
L4	223	248	260.5	273	285.5	298	323	335.5	348	373	385.5	398	410.5	435.5	448	460.5	473	498	510.5	523	548	560.5	573	598

S Series VQC1000/2000

Kit (Serial transmission) For EX126 Integrated-type (For Output) Serial Transmission System IP67 compliant

VV5QC11
S kit (Serial transmission kit: EX126)

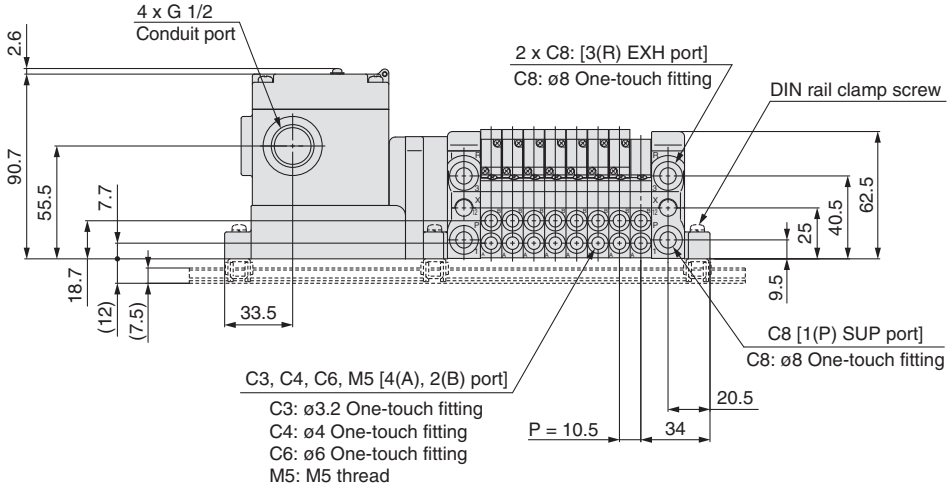

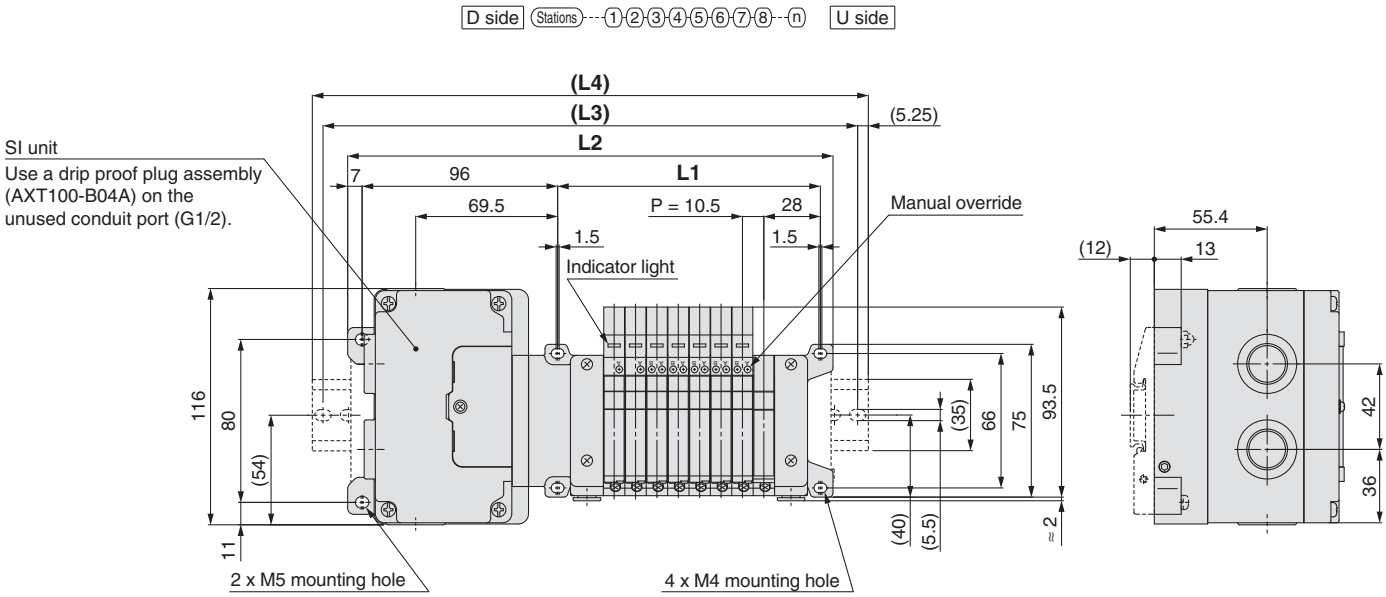

The dashed lines indicate DIN rail mounting [-D] (with DIN rail mounting bracket).

Formula: L1 = 10.5n + 45, L2 = 10.5n + 154.5 n: Stations (Maximum 16 stations)

L \ n	1	2	3	4	5	6	7	8	9	10	11	12	13	14	15	16
L1	55.5	66	76.5	87	97.5	108	118.5	129	139.5	150	160.5	171	181.5	192	202.5	213
L2	165	175.5	186	196.5	207	217.5	228	238.5	249	259.5	270	280.5	291	301.5	312	322.5
L3	187.5	200	212.5	225	237.5	237.5	250	262.5	275	287.5	300	300	312.5	325	337.5	350
L4	198	210.5	223	235.5	248	248	260.5	273	285.5	298	310.5	310.5	323	335.5	348	360.5

S Series VQC1000/2000

Kit (Serial transmission) For EX126 Integrated-type (For Output) Serial Transmission System IP67 compliant

VV5QC21
S kit (Serial transmission kit: EX126)

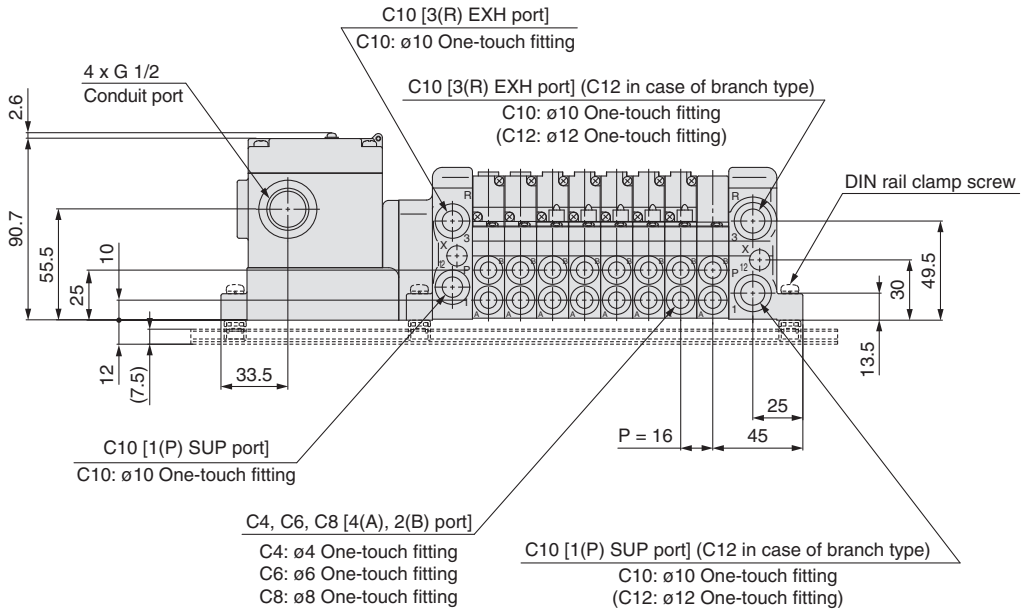

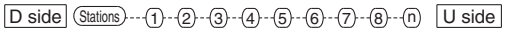

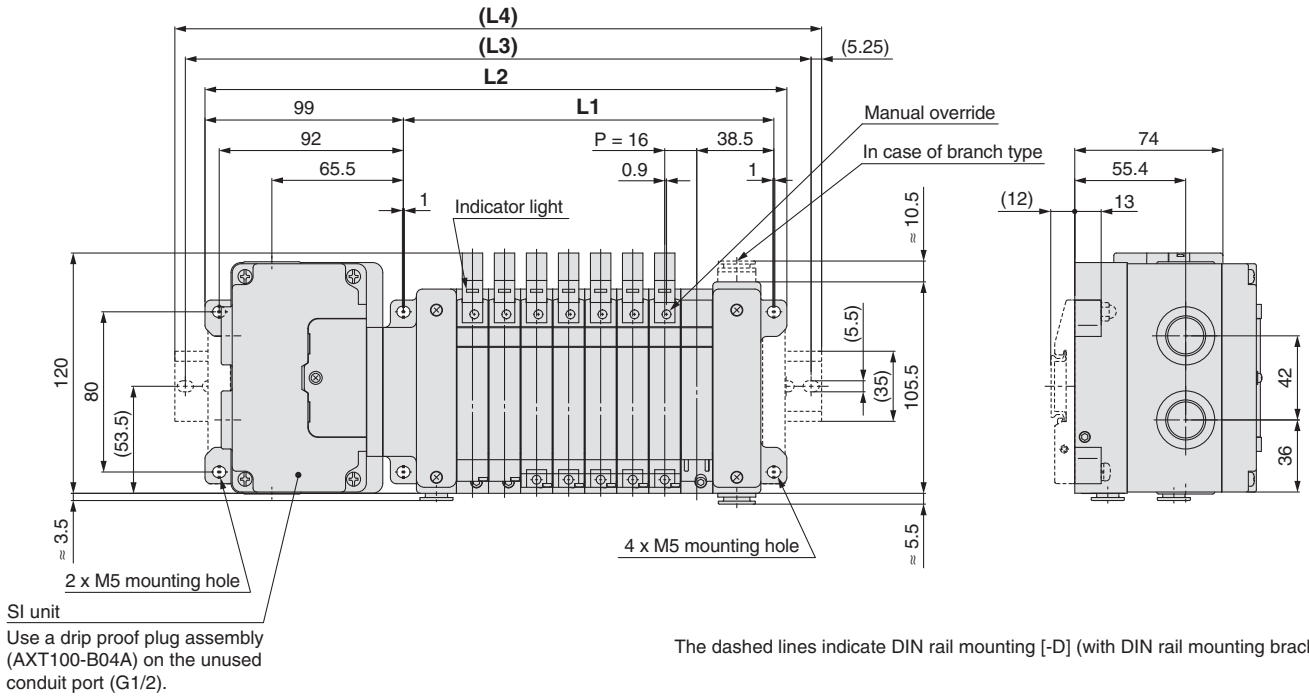

The dashed lines indicate DIN rail mounting [-D] (with DIN rail mounting bracket).

Formula: L1 = 16n + 57, L2 = 16n + 163 n: Stations (Maximum 16 stations)

L \ n	1	2	3	4	5	6	7	8	9	10	11	12	13	14	15	16
L1	73	89	105	121	137	153	169	185	201	217	233	249	265	281	297	313
L2	179	195	211	227	243	259	275	291	307	323	339	355	371	387	403	419
L3	200	225	237.5	250	262.5	287.5	300	312.5	337.5	371	362.5	375	400	412.5	425	450
L4	210.5	235.5	248	260.5	273	298	310.5	323	348	360.5	373	385.5	410.5	423	435.5	460.5

F Series VQC1000/2000
kit (D-sub connector) IP40 compliant

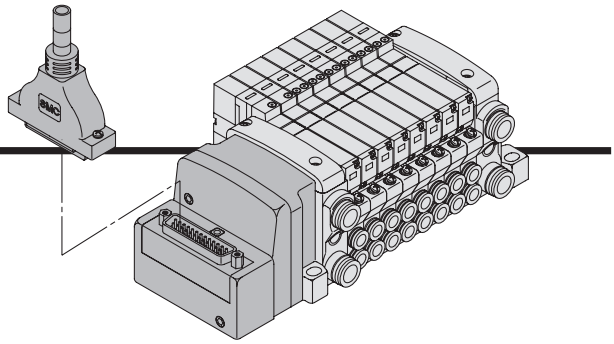

- **Using our D-sub connector for electrical connections greatly reduces labour, while it also minimises wiring and saves space.**
- **We use a D-sub connector (25P) that conforms to MIL standards and is therefore widely compatible with many standard commercial models.**
- **Top or side entry for the connector can be changed freely, allowing for changes even after mounting, to meet any changing needs for space.**

Electrical Wiring Specifications

D-sub connector

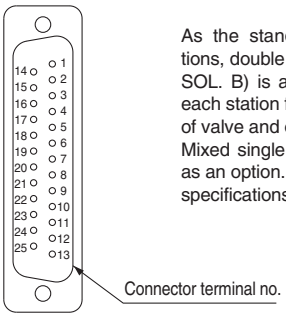

As the standard electrical wiring specifications, double wiring (connected to SOL. A and SOL. B) is adopted for the internal wiring of each station for 12 stations or less, regardless of valve and option types.
Mixed single and double wiring are available as an option. Refer to the below special wiring specifications (option).

Lead wire colours for D-sub connector assembly (AXT100-DS25-015/030/050)

		Terminal no.	Polarity (Positive COM spec.)	Polarity (Negative COM spec. Note)	Lead wire colour	Dot marking
Station 1	SOL.A	1	(–)	(+)	Black	None
	SOL.B	14	(–)	(+)	Yellow	Black
Station 2	SOL.A	2	(–)	(+)	Brown	None
	SOL.B	15	(–)	(+)	Pink	Black
Station 3	SOL.A	3	(–)	(+)	Red	None
	SOL.B	16	(–)	(+)	Blue	White
Station 4	SOL.A	4	(–)	(+)	Orange	None
	SOL.B	17	(–)	(+)	Purple	None
Station 5	SOL.A	5	(–)	(+)	Yellow	None
	SOL.B	18	(–)	(+)	Grey	None
Station 6	SOL.A	6	(–)	(+)	Pink	None
	SOL.B	19	(–)	(+)	Orange	Black
Station 7	SOL.A	7	(–)	(+)	Blue	None
	SOL.B	20	(–)	(+)	Red	White
Station 8	SOL.A	8	(–)	(+)	Purple	White
	SOL.B	21	(–)	(+)	Brown	White
Station 9	SOL.A	9	(–)	(+)	Grey	Black
	SOL.B	22	(–)	(+)	Pink	Red
Station 10	SOL.A	10	(–)	(+)	White	Black
	SOL.B	23	(–)	(+)	Grey	Red
Station 11	SOL.A	11	(–)	(+)	White	Red
	SOL.B	24	(–)	(+)	Black	White
Station 12	SOL.A	12	(–)	(+)	Yellow	Red
	SOL.B	25	(–)	(+)	White	None
	COM.	13	(+)	(–)	Orange	Red

Note) When using the negative COM specification, use valves for negative COM.

Special Wiring Specifications (Option)

(25P)

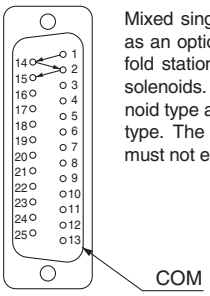

Mixed single and double wiring are available as an option. The maximum number of manifold stations is determined by the number of solenoids. Count one point for a single solenoid type and two points for a double solenoid type. The total number of solenoids (points) must not exceed 24.

Cable Assembly

AXT100-DS25-015/030/050

(D-sub connector cable assembly can be ordered with manifolds. Refer to "How to Order Manifold.")

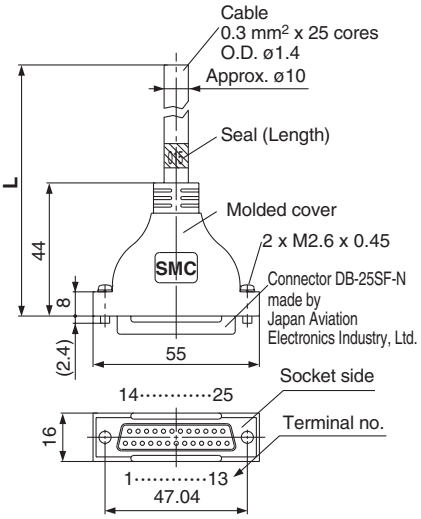

Lead wire colours for D-sub connector cable assembly terminal numbers

Terminal no.	Lead wire colour	Dot marking
1	Black	None
2	Brown	None
3	Red	None
4	Orange	None
5	Yellow	None
6	Pink	None
7	Blue	None
8	Purple	White
9	Grey	Black
10	White	Black
11	White	Red
12	Yellow	Red
13	Orange	Red
14	Yellow	Black
15	Pink	Black
16	Blue	White
17	Purple	None
18	Grey	None
19	Orange	Black
20	Red	White
21	Brown	White
22	Pink	Red
23	Grey	Red
24	Black	White
25	White	None

D-sub connector cable assembly

Cable length (L)	Assembly part no.	Note
1.5 m	AXT100-DS25-015	Cable 0.3 mm² x 25 cores
3 m	AXT100-DS25-030	
5 m	AXT100-DS25-050	

Note 1) When using a standard commercial connector, use a type 25P female connector conforming to MIL-C-24308.
Note 2) Cannot be used for transfer wiring.
Note 3) Lengths other than the above are also available. Please contact SMC for details.

Electrical characteristics

Item	Property
Conductor resistance Ω/km, 20°C	65 or less
Voltage limit V, 1 minute, AC	1000
Insulation resistance MΩ/km, 20°C	5 or more

Note) The minimum bending radius of the D-sub connector cable is 20 mm.

Connector Manufacturers' Example

- Fujitsu, Ltd.
- Japan Aviation Electronics Industry, Ltd.
- J.S.T. Mfg. Co., Ltd.
- Hirose Electric Co., Ltd.

F Series VQC1000/2000
kit (D-sub connector) IP40 compliant

VV5QC11

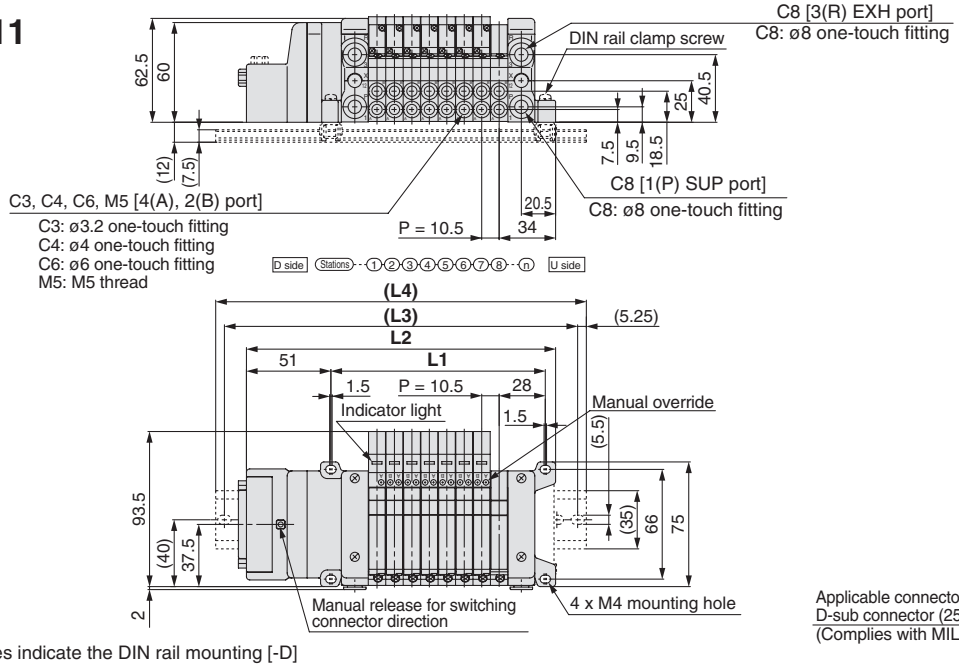

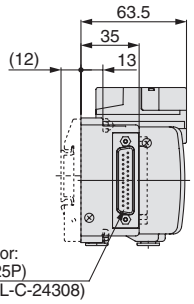

The dashed lines indicate the DIN rail mounting [-D]
(with DIN rail mounting bracket).

Formula: L1 = 10.5n + 45, L2 = 10.5n + 102 n: Stations (Maximum 24 stations)

L \ n	1	2	3	4	5	6	7	8	9	10	11	12	13	14	15	16	17	18	19	20	21	22	23	24
L1	55.5	66	76.5	87	97.5	108	118.5	129	139.5	150	160.5	171	181.5	192	202.5	213	223.5	234	244.5	255	265.5	276	286.5	297
L2	112.5	123	133.5	144	154.5	165	175.5	186	196.5	207	217.5	228	238.5	249	259.5	270	280.5	291	301.5	312	322.5	333	343.5	354
L3	137.5	150	162.5	175	175	187.5	200	212.5	225	237.5	237.5	250	262.5	275	287.5	300	300	312.5	325	337.5	350	362.5	375	375
L4	148	160.5	173	185.5	185.5	198	210.5	223	235.5	248	248	260.5	273	285.5	298	310.5	310.5	323	335.5	348	360.5	373	385.5	385.5

VV5QC21

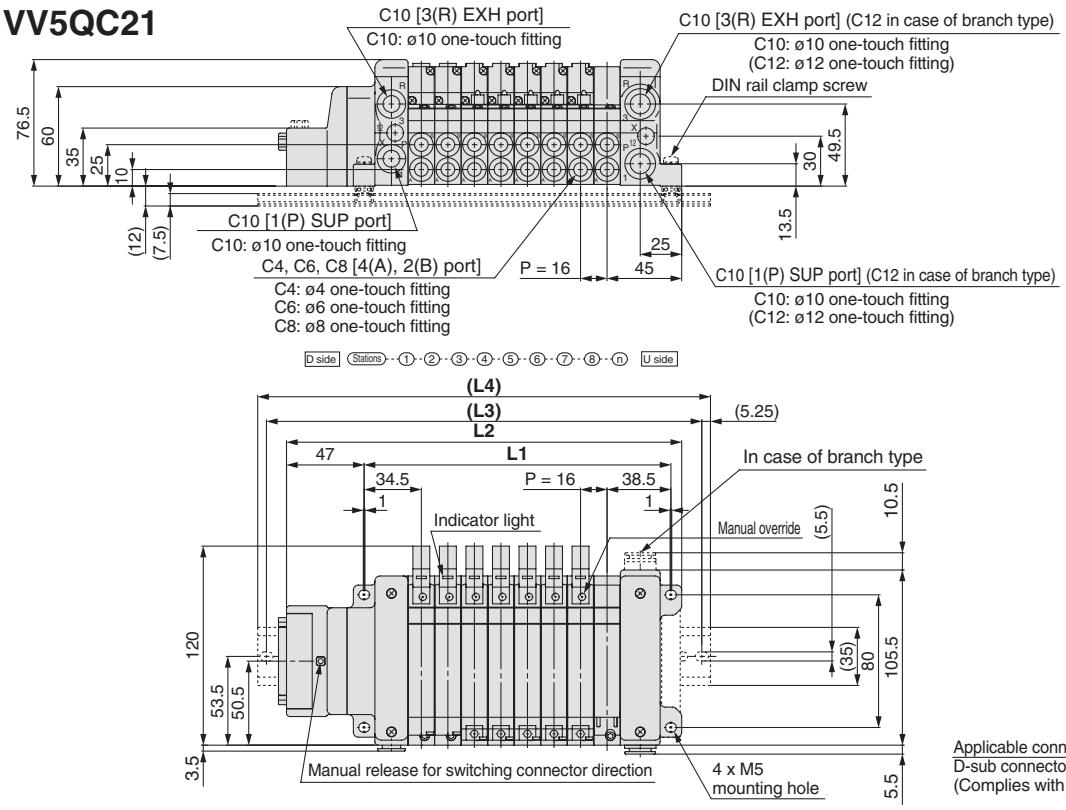

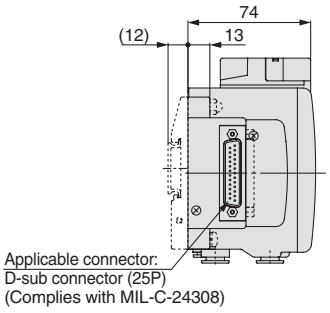

The dashed lines indicate the DIN rail mounting [-D]
(with DIN rail mounting bracket).

Formula: L1 = 16n + 57, L2 = 16n + 110.5 n: Stations (Maximum 24 stations)

L \ n	1	2	3	4	5	6	7	8	9	10	11	12	13	14	15	16	17	18	19	20	21	22	23	24
L1	73	89	105	121	137	153	169	185	201	217	233	249	265	281	297	313	329	345	361	377	393	409	425	441
L2	126.5	142.5	158.5	174.5	190.5	206.5	222.5	238.5	254.5	270.5	286.5	302.5	318.5	334.5	350.5	366.5	382.5	398.5	414.5	430.5	446.5	462.5	478.5	494.5
L3	150	162.5	187.5	200	212.5	237.5	250	262.5	275	300	312.5	325	350	362.5	375	387.5	412.5	425	437.5	450	475	487.5	500	525
L4	160.5	173	198	210.5	223	248	260.5	273	285.5	310.5	323	335.5	360.5	373	385.5	398	423	435.5	448	460.5	485.5	498	510.5	535.5

P Series VQC1000/2000 kit (Flat ribbon cable) IP40 compliant

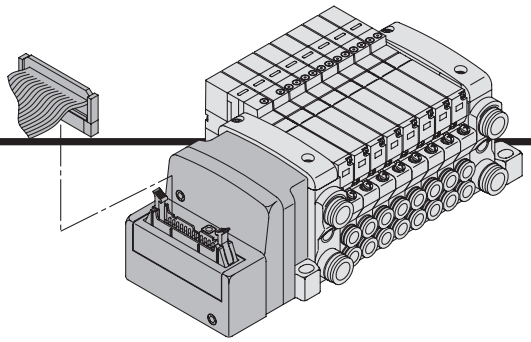

- **Using our flat ribbon cable for electrical connections greatly reduces labour, while it also minimises wiring and saves space.**
- **We use flat ribbon cables whose connectors (26P and 20P) conform to MIL standards, and are therefore widely compatible with many standard commercial models.**
- **Top or side entry for the connector can be changed freely, allowing for changes even after mounting, to meet any changing needs for space.**

Electrical Wiring Specifications

Flat ribbon cable connector

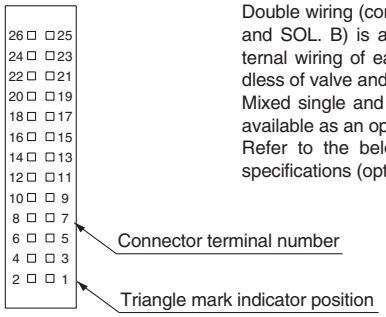

Double wiring (connected to SOL. A and SOL. B) is adopted for the internal wiring of each station, regardless of valve and option types.
Mixed single and double wiring are available as an option.
Refer to the below special wiring specifications (option).

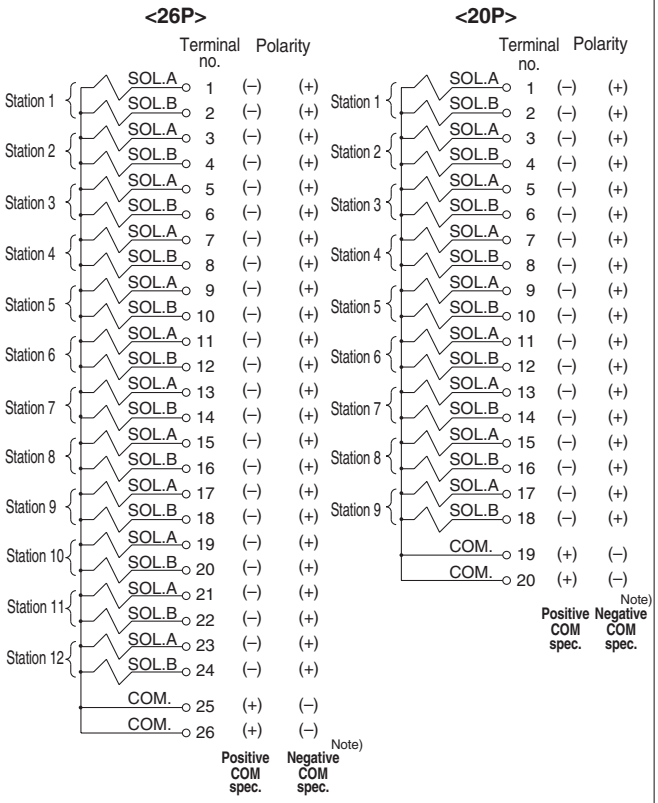

Note) When using the negative COM specification, use valves for negative COM.

Cable Assembly

AXT100-FC $^{20}_{26}$ - $^{1}_{2}_{3}$

(Type 26P flat ribbon cable connector assembly can be ordered with manifolds. Refer to "How to Order Manifold.")

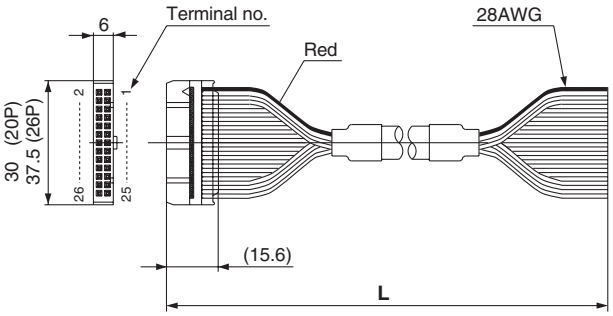

Flat ribbon cable connector assembly

Cable length (L)	Assembly part no.	
	26P	20P
1.5 m	AXT100-FC26-1	AXT100-FC20-1
3 m	AXT100-FC26-2	AXT100-FC20-2
5 m	AXT100-FC26-3	AXT100-FC20-3

Note 1) When using a standard commercial connector, use a type 26P connector conforming to MIL-C-83503 or a type 20P with strain relief.
Note 1) Cannot be used for transfer wiring.
Note 1) Lengths other than the above are also available. Please contact SMC for details.

Connector Manufacturers' Example

- Hirose Electric Co., Ltd.
- Sumitomo 3M Limited
- Fujitsu, Ltd.
- Japan Aviation Electronics Industry, Ltd.
- J.S.T. Mfg. Co., Ltd.
- Oki Electric Cable Co., Ltd.

Special Wiring Specifications (Option)

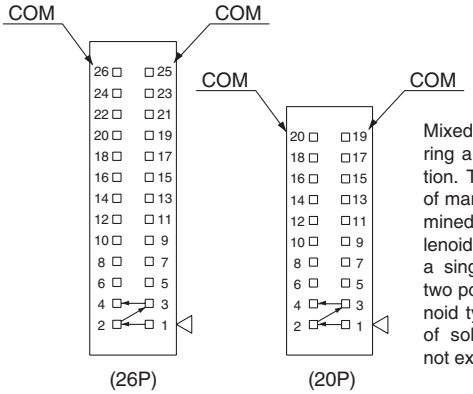

Mixed single and double wiring are available as an option. The maximum number of manifold stations is determined by the number of solenoids. Count one point for a single solenoid type and two points for a double solenoid type. The total number of solenoids (points) must not exceed 24.

P Series VQC1000/2000
kit (Flat ribbon cable) IP40 compliant

VV5QC11

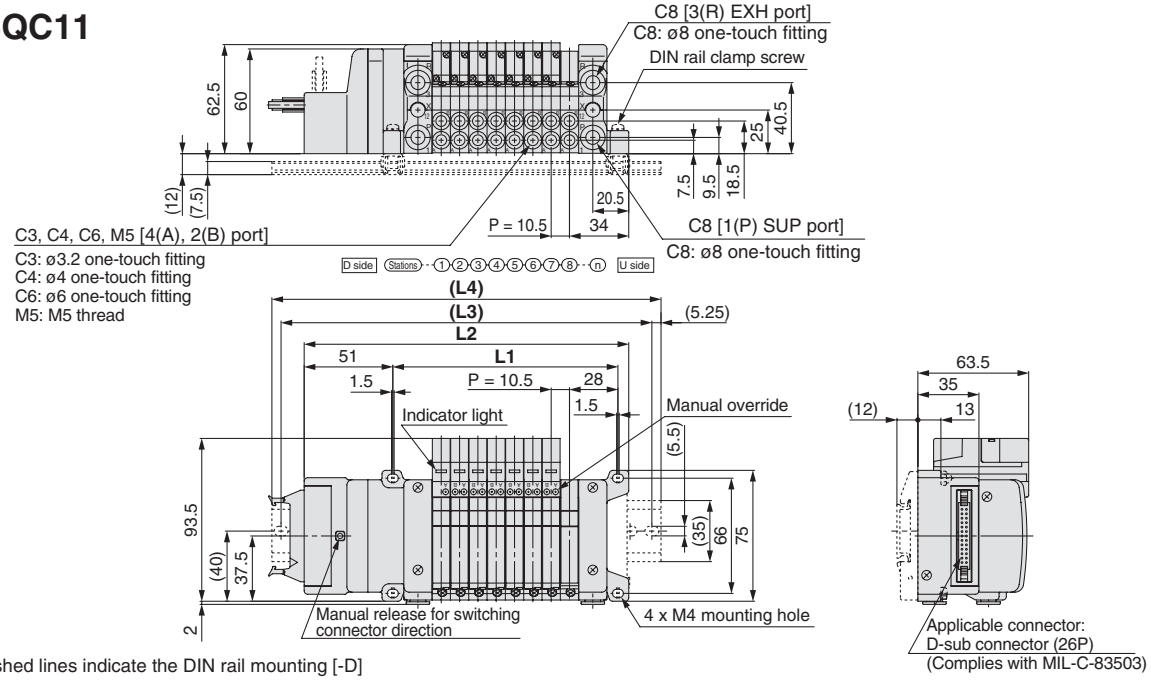

The dashed lines indicate the DIN rail mounting [-D] (with DIN rail mounting bracket).

Formula: L1 = 10.5n + 45, L2 = 10.5n + 102 n: Stations (Maximum 24 stations)

L \ n	1	2	3	4	5	6	7	8	9	10	11	12	13	14	15	16	17	18	19	20	21	22	23	24
L1	55.5	66	76.5	87	97.5	108	118.5	129	139.5	150	160.5	171	181.5	192	202.5	213	223.5	234	244.5	255	265.5	276	286.5	297
L2	112.5	123	133.5	144	154.5	165	175.5	186	196.5	207	217.5	228	238.5	249	259.5	270	280.5	291	301.5	312	322.5	333	343.5	354
L3	137.5	150	162.5	175	175	187.5	200	212.5	225	237.5	237.5	250	262.5	275	287.5	300	300	312.5	325	337.5	350	362.5	375	375
L4	148	160.5	173	185.5	185.5	198	210.5	223	235.5	248	248	260.5	273	285.5	298	310.5	310.5	323	335.5	348	360.5	373	385.5	385.5

VV5QC21

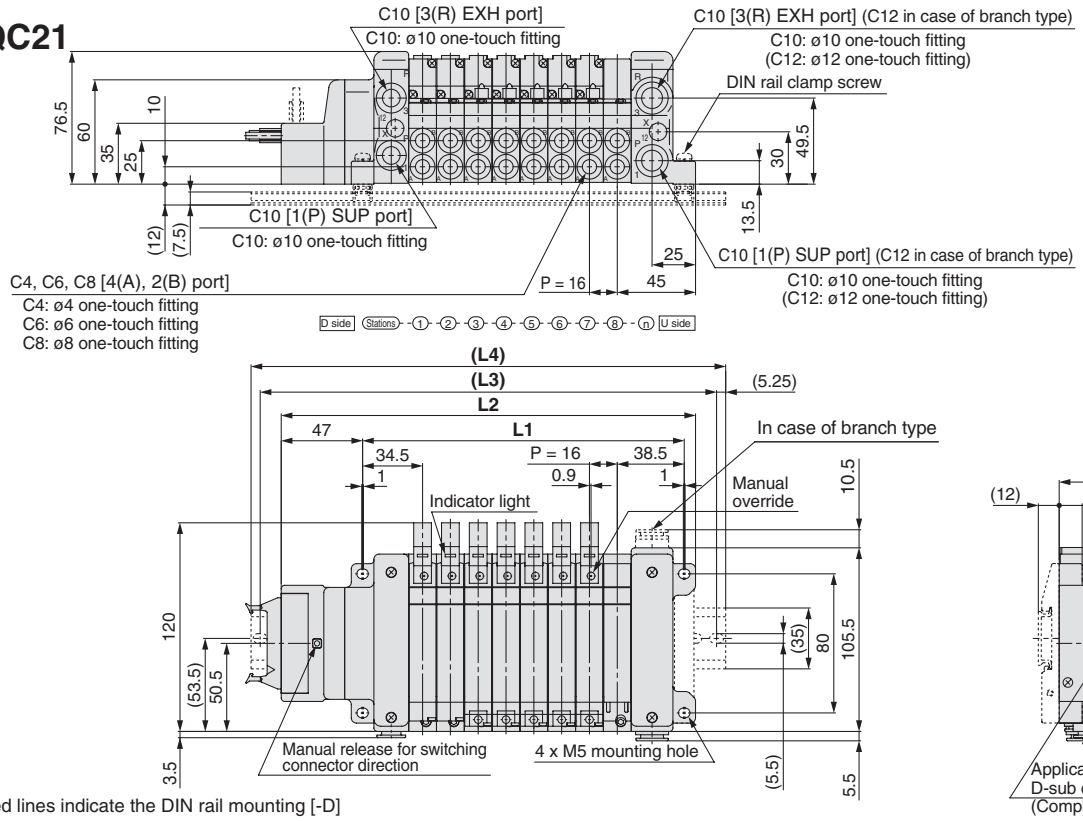

The dashed lines indicate the DIN rail mounting [-D] (with DIN rail mounting bracket).

Formula: L1 = 16n + 57, L2 = 16n + 110.5 n: Stations (Maximum 24 stations)

L \ n	1	2	3	4	5	6	7	8	9	10	11	12	13	14	15	16	17	18	19	20	21	22	23	24
L1	73	89	105	121	137	153	169	185	201	217	233	249	265	281	297	313	329	345	361	377	393	409	425	441
L2	126.5	142.5	158.5	174.5	190.5	206.5	222.5	238.5	254.5	270.5	286.5	302.5	318.5	334.5	350.5	366.5	382.5	398.5	414.5	430.5	446.5	462.5	478.5	494.5
L3	150	162.5	187.5	200	212.5	237.5	250	262.5	275	300	312.5	325	350	362.5	375	387.5	412.5	425	437.5	450	475	487.5	500	525
L4	160.5	173	198	210.5	223	248	260.5	273	285.5	310.5	323	335.5	360.5	373	385.5	398	423	435.5	448	460.5	485.5	498	510.5	535.5

T Series VQC1000/2000
kit (Terminal block box) IP67 compliant

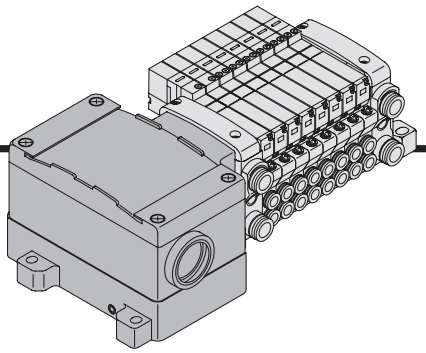

- **This kit has a small terminal block inside a junction box. The electrical entry port of a G 3/4 permits connection of conduit fittings.**

Terminal Block Connection

Step 1. Removing the terminal block cover
Loosen the 4 mounting screws (M4) and remove the terminal block cover.

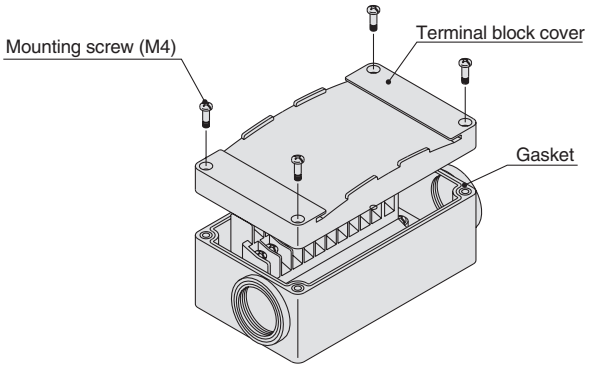

Step 2. The diagram below shows the terminal block wiring. All stations are provided with double wiring regardless of the valves which are mounted.
Connect each wire to the power supply side, according to the markings provided inside the terminal block.

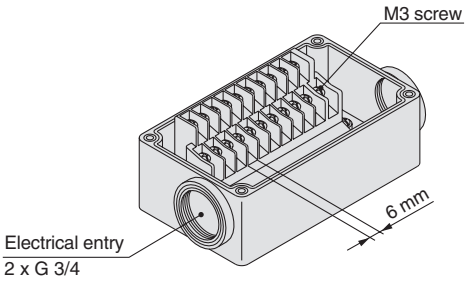

Step 3. Mounting the terminal block cover
Securely tighten the screws to the torque shown in the table below, after confirming that the gasket is installed correctly.

Proper tightening torque (N·m)
0.7 to 1.2

- Applicable crimped terminal: 1.25-3S,1.25Y-3,1.25Y-3N,1.25Y-3.5
- Name plate: VVQ5000-N-T
- Drip-proof plug assembly (for G 3/4): AXT100-B06A

Electrical Wiring Specifications (IP67 compatible)

Standard wiring

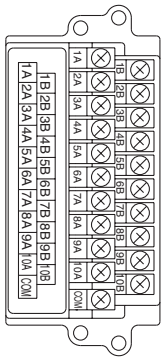

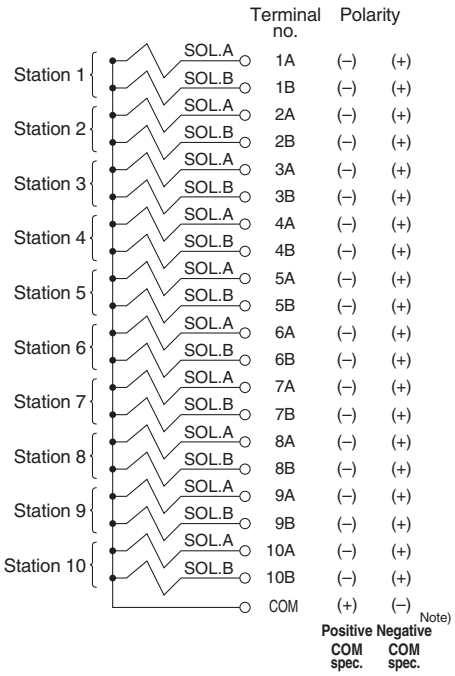

Double wiring (connected to SOL. A and SOL. B) is adopted for the internal wiring of each station, regardless of valve and option types.
Mixed single and double wiring are available as an option.

Note) When using the negative COM specification, use valves for negative COM.

Special Wiring Specifications (Option)

Mixed single and double wiring are available as an option. The maximum number of manifold stations is determined by the number of solenoids. Count one point for a single solenoid type and two points for a double solenoid type. The total number of solenoids (points) must not exceed 20.

1. How to Order

Indicate option symbol "-K" in the manifold part number and be sure to specify station positions for single or double wiring on the manifold specification sheet.

2. Wiring specifications

Connector terminal numbers are connected from solenoid station 1 on the A side in the order indicated by the arrows without skipping any terminal numbers.

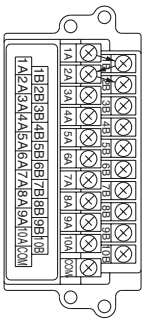

T Series VQC1000/2000
kit (Terminal block box) IP67 compliant

VV5QC11

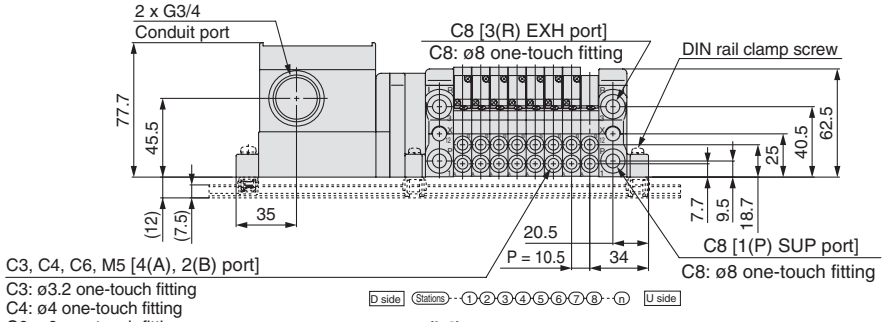

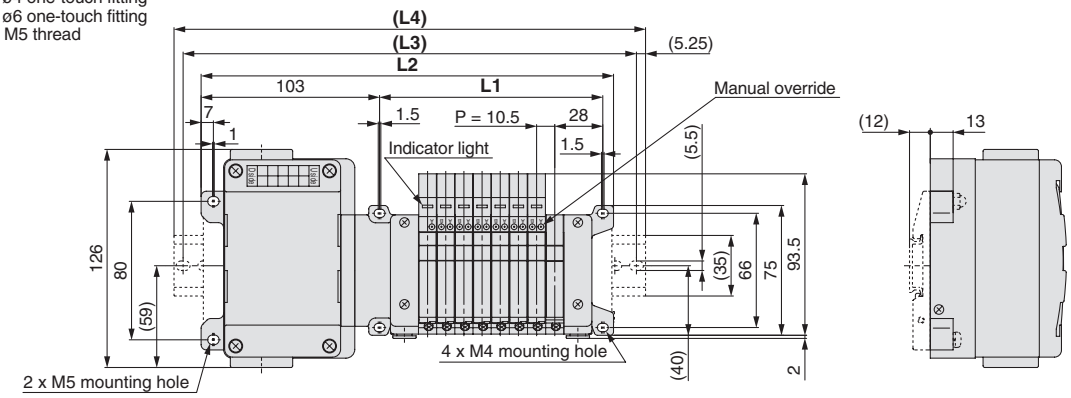

The dashed lines indicate DIN rail mounting [-D]
(with DIN rail mounting bracket).

Formula: L1 = 10.5n + 45, L2 = 10.5n + 154.5 n: Stations (Maximum 20 stations)

L \ n	1	2	3	4	5	6	7	8	9	10	11	12	13	14	15	16	17	18	19	20
L1	55.5	66	76.5	87	97.5	108	118.5	129	139.5	150	160.5	171	181.5	192	202.5	213	223.5	234	244.5	255
L2	165	175.5	186	196.5	207	217.5	228	238.5	249	259.5	270	280.5	291	301.5	312	322.5	333	343.5	354	364.5
L3	187.5	200	212.5	225	237.5	237.5	250	262.5	275	287.5	300	300	312.5	325	337.5	350	362.5	375	375	387.5
L4	198	210.5	223	235.5	248	248	260.5	273	285.5	298	310.5	310.5	323	335.5	348	360.5	373	385.5	385.5	398

VV5QC21

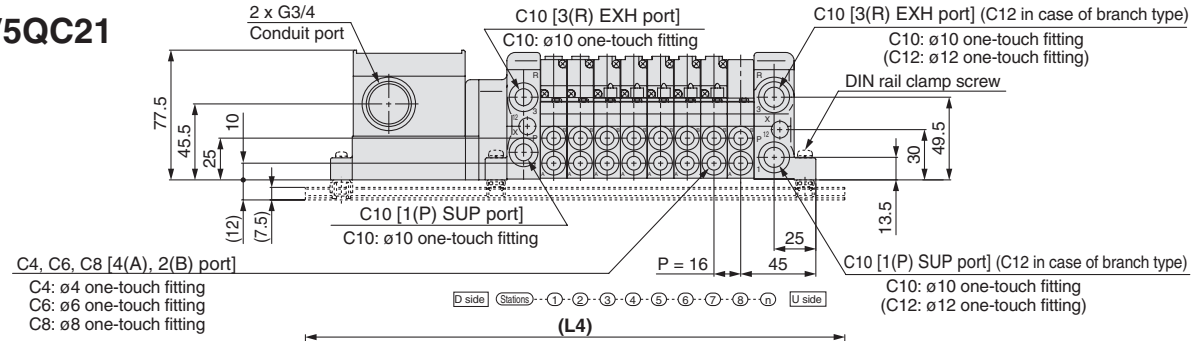

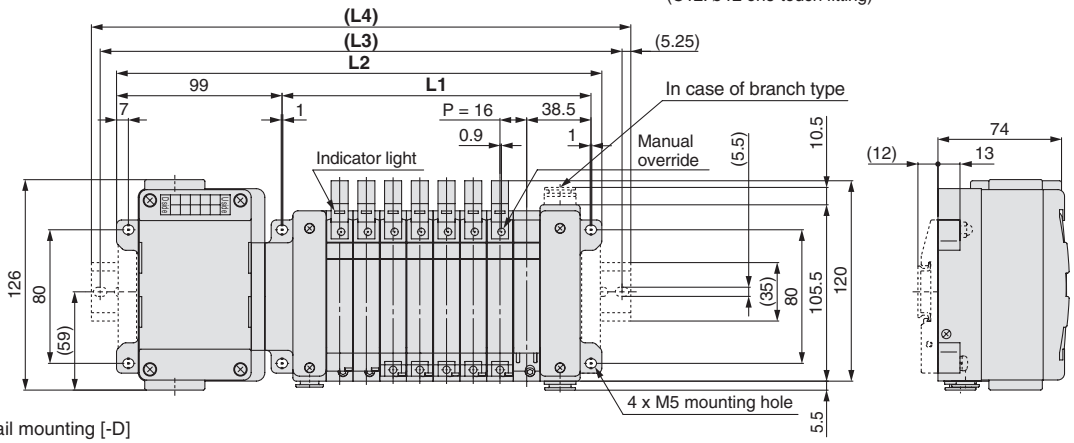

The dashed lines indicate DIN rail mounting [-D]
(with DIN rail mounting bracket).

Formula: L1 = 16n + 57, L2 = 16n + 163 n: Stations (Maximum 20 stations)

L \ n	1	2	3	4	5	6	7	8	9	10	11	12	13	14	15	16	17	18	19	20
L1	73	89	105	121	137	153	169	185	201	217	233	249	265	281	297	313	329	345	361	377
L2	179	195	211	227	243	259	275	291	307	323	339	355	371	387	403	419	435	451	467	483
L3	200	225	237.5	250	262.5	287.5	300	312.5	337.5	350	362.5	375	400	412.5	425	450	462.5	475	487.5	512.5
L4	210.5	235.5	248	260.5	273	298	310.5	323	348	360.5	373	385.5	410.5	423	435.5	460.5	473	485.5	498	523

L Series VQC1000/2000
kit (Lead wire) IP67 compliant

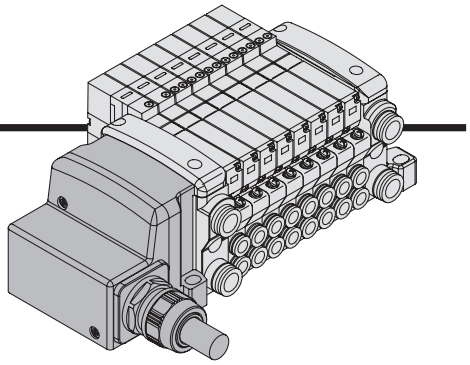

- **Direct electrical entry type**
- **IP67 enclosure is available with use of cables with sheath and waterproof connectors.**

Electrical Wiring Specifications

Lead wire specifications

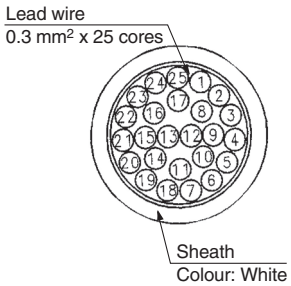

As the standard electrical wiring specifications, double wiring (connected to SOL. A and SOL. B) is adopted for the internal wiring of each station for 12 stations or less, regardless of valve and option types.
Mixed single and double wiring are available as an option. Refer to the below special wiring specifications (option).

		Terminal no.	Polarity		Lead wire colour	Dot marking
Station 1	SOL.A	1	(–)	(+)	Black	None
	SOL.B	14	(–)	(+)	Yellow	Black
Station 2	SOL.A	2	(–)	(+)	Brown	None
	SOL.B	15	(–)	(+)	Pink	Black
Station 3	SOL.A	3	(–)	(+)	Red	None
	SOL.B	16	(–)	(+)	Blue	White
Station 4	SOL.A	4	(–)	(+)	Orange	None
	SOL.B	17	(–)	(+)	Purple	None
Station 5	SOL.A	5	(–)	(+)	Yellow	None
	SOL.B	18	(–)	(+)	Grey	None
Station 6	SOL.A	6	(–)	(+)	Pink	None
	SOL.B	19	(–)	(+)	Orange	Black
Station 7	SOL.A	7	(–)	(+)	Blue	None
	SOL.B	20	(–)	(+)	Red	White
Station 8	SOL.A	8	(–)	(+)	Purple	White
	SOL.B	21	(–)	(+)	Brown	White
Station 9	SOL.A	9	(–)	(+)	Grey	Black
	SOL.B	22	(–)	(+)	Pink	Red
Station 10	SOL.A	10	(–)	(+)	White	Black
	SOL.B	23	(–)	(+)	Grey	Red
Station 11	SOL.A	11	(–)	(+)	White	Red
	SOL.B	24	(–)	(+)	Black	White
Station 12	SOL.A	12	(–)	(+)	Yellow	Red
	SOL.B	25	(–)	(+)	White	None
	COM.	13	(+)	(–) Note)	Orange	Red
			Positive COM spec.	**Negative COM spec.**		

Note) When using the negative COM specification, use valves for negative COM.

Lead wire length

VV5QC11−08 C6 LD 0

Lead wire length

0	0.6 m
1	1.5 m
2	3.0 m

Electrical characteristics

Item	Property
Conductor resistance Ω/km, 20°C	65 or less
Voltage limit V, 1 minute, AC	1000
Insulation resistance MΩ/km, 20°C	5 or more

Note) Cannot be used for transfer wiring.
The minimum bending radius of the cable is 20 mm.

Special Wiring Specifications (Option)

Mixed single and double wiring are available as an option. The maximum number of manifold stations is determined by the number of solenoids. Count one point for a single solenoid type and two points for a double solenoid type. The total number of solenoids (points) must not exceed 24.

L Series VQC1000/2000
kit (Lead wire) IP67 compliant

VV5QC11

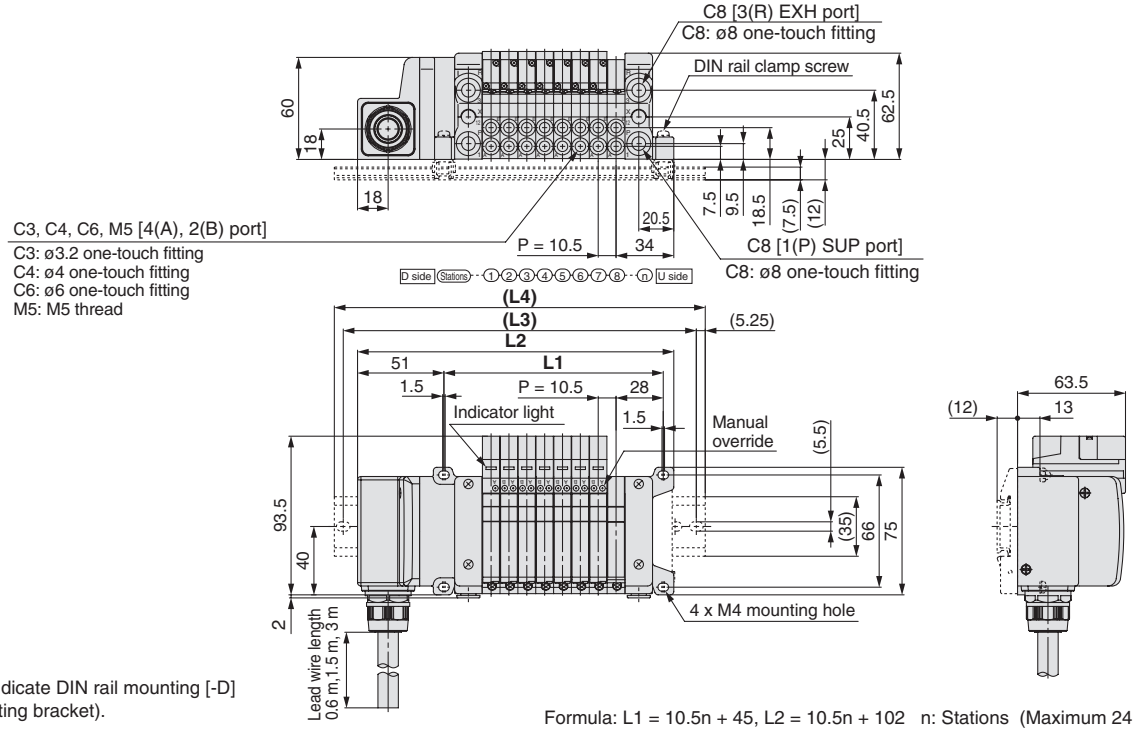

The dashed lines indicate DIN rail mounting [-D] (with DIN rail mounting bracket).

Formula: L1 = 10.5n + 45, L2 = 10.5n + 102 n: Stations (Maximum 24 stations)

L \ n	1	2	3	4	5	6	7	8	9	10	11	12	13	14	15	16	17	18	19	20	21	22	23	24
L1	55.5	66	76.5	87	97.5	108	118.5	129	139.5	150	160.5	171	181.5	192	202.5	213	223.5	234	244.5	255	265.5	276	286.5	297
L2	112.5	123	133.5	144	154.5	165	175.5	186	196.5	207	217.5	228	238.5	249	259.5	270	280.5	291	301.5	312	322.5	333	343.5	354
L3	137.5	150	162.5	175	175	187.5	200	212.5	225	237.5	237.5	250	262.5	275	287.5	300	300	312.5	325	337.5	350	362.5	375	375
L4	148	160.5	173	185.5	185.5	198	210.5	223	235.5	248	248	260.5	273	285.5	298	310.5	310.5	323	335.5	348	360.5	373	385.5	385.5

VV5QC21

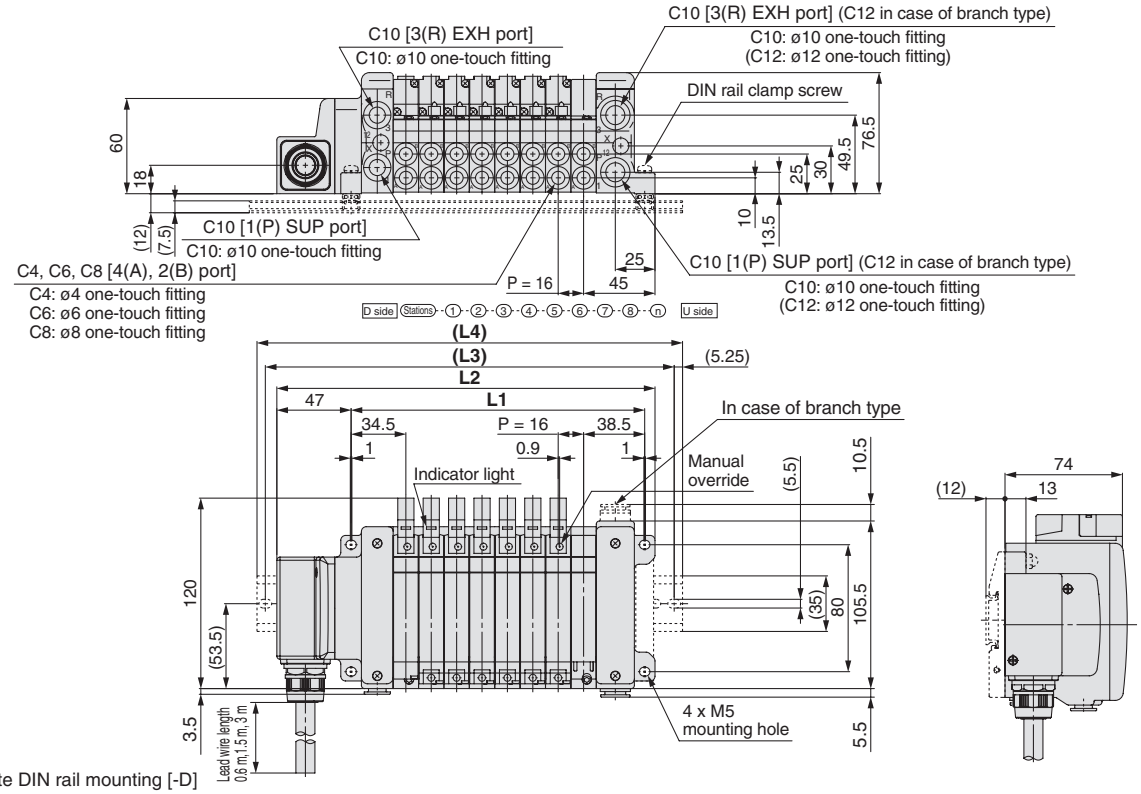

The dashed lines indicate DIN rail mounting [-D] (with DIN rail mounting bracket).

Formula: L1 = 16n + 57, L2 = 16n + 110.5 n: Stations (Maximum 24 stations)

L \ n	1	2	3	4	5	6	7	8	9	10	11	12	13	14	15	16	17	18	19	20	21	22	23	24
L1	73	89	105	121	137	153	169	185	201	217	233	249	265	281	297	313	329	345	361	377	393	409	425	441
L2	126.5	142.5	158.5	174.5	190.5	206.5	222.5	238.5	254.5	270.5	286.5	302.5	318.5	334.5	350.5	366.5	382.5	398.5	414.5	430.5	446.5	462.5	478.5	494.5
L3	150	162.5	187.5	200	212.5	237.5	250	262.5	275	300	312.5	325	350	362.5	375	387.5	412.5	425	437.5	450	475	487.5	500	525
L4	160.5	173	198	210.5	223	248	260.5	273	285.5	310.5	323	335.5	360.5	373	385.5	398	423	435.5	448	460.5	485.5	498	510.5	535.5

M Series VQC1000/2000
kit (Circular connector) IP67 compliant

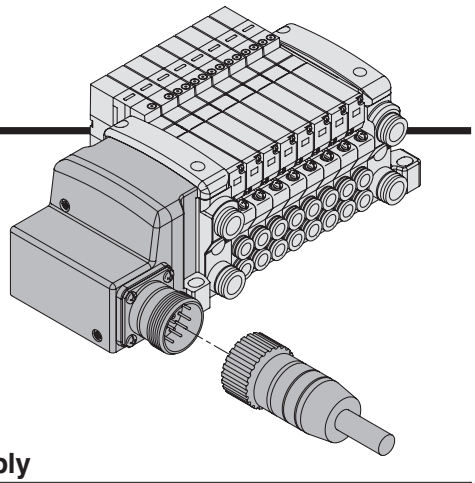

- **Use of circular connectors helps streamline wiring procedure to save labour.**
- **IP67 enclosure is available with use of waterproof circular connectors.**

Electrical Wiring Specifications

Circular connector

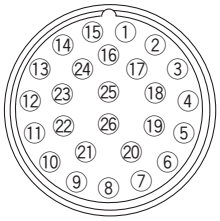

Double wiring (connected to SOL.A and SOL.B) is used for the internal wiring of each station, regardless of valve and option types. Mixed single and double wiring are available as an option. Refer to the below special wiring specifications (option).

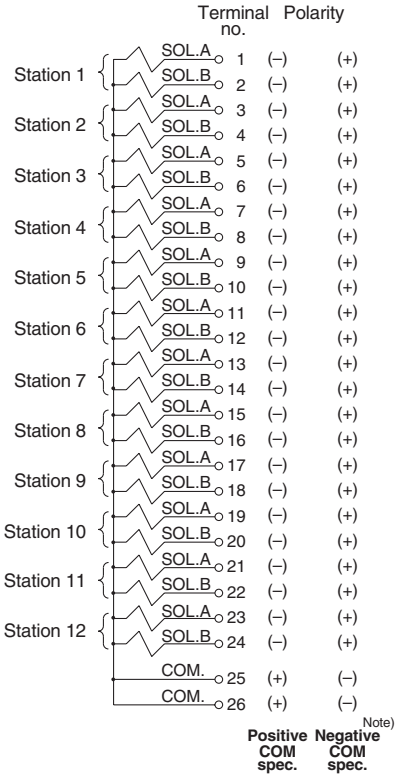

Note) When using the negative COM specification, use valves for negative COM.

Special Wiring Specifications (Option)

Mixed single and double wiring are available as an option. The maximum number of manifold stations is determined by the number of solenoids. Count one point for a single solenoid type and two points for a double solenoid type. The total number of solenoids (points) must not exceed 24.

Cable Assembly

AXT100-MC26-015 / 030 / 050

(Type 26P circular connector cable assembly can be ordered with manifolds. Refer to "How to Order Manifold.")

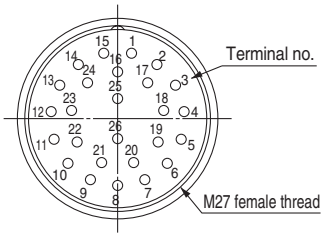

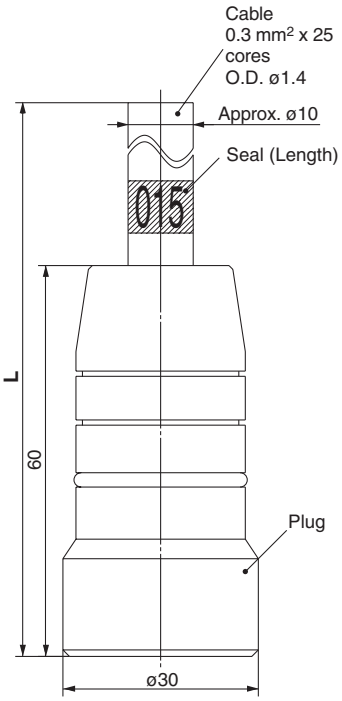

Lead wire colours for circular connector cable assembly terminal numbers

Terminal no.	Lead wire colour	Dot marking
1	Black	None
2	Brown	None
3	Red	None
4	Orange	None
5	Yellow	None
6	Pink	None
7	Blue	None
8	Purple	White
9	Grey	Black
10	White	Black
11	White	Red
12	Yellow	Red
13	Orange	Red
14	Yellow	Black
15	Pink	Black
16	Blue	White
17	Purple	None
18	Grey	None
19	Orange	Black
20	Red	White
21	Brown	White
22	Pink	Red
23	Grey	Red
24	Black	White
25	White	None
26	White	None

Electrical characteristics

Item	Property
Conductor resistance Ω/km, 20°C	65 or less
Voltage limit V, 1 minute, AC	1000
Insulation resistance MΩ/km, 20°C	5 or more

Note) The minimum bending radius of the circular connector cable is 20 mm.

Circular connector cable assembly

Cable length (L)	Assembly part no.
	26P
1.5 m	AXT100-MC26-015
3 m	AXT100-MC26-030
5 m	AXT100-MC26-050

Note 1) Cannot be used for transfer wiring.
Note 2) Lengths other than the above are also available. Please contact SMC for details.

M Series VQC1000/2000 kit (Circular connector) IP67 compliant

VV5QC11

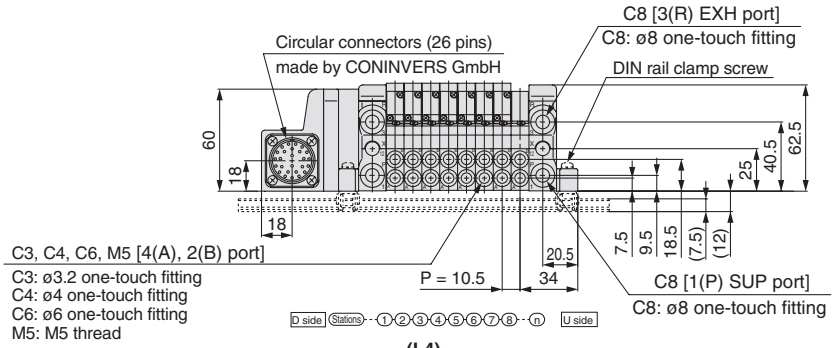

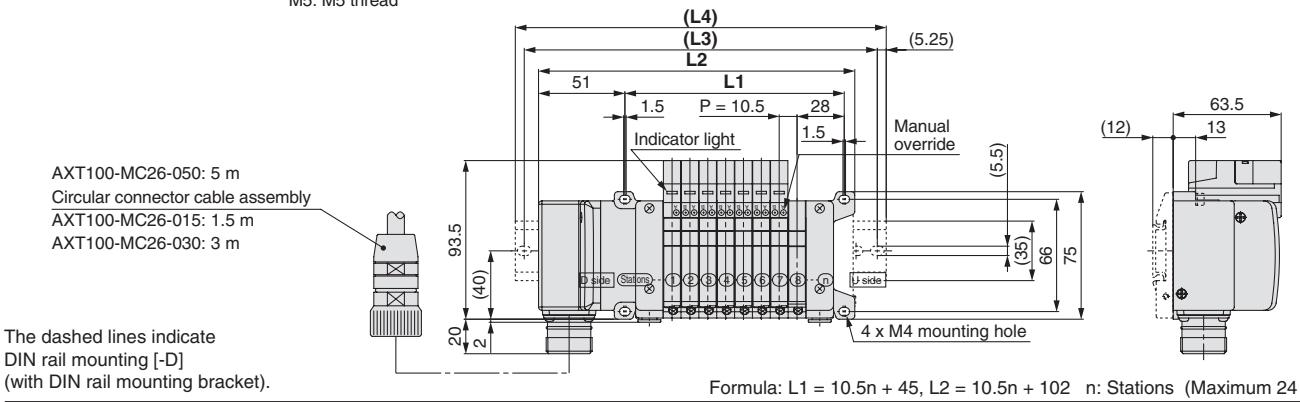

Formula: L1 = 10.5n + 45, L2 = 10.5n + 102 n: Stations (Maximum 24 stations)

L \ n	1	2	3	4	5	6	7	8	9	10	11	12	13	14	15	16	17	18	19	20	21	22	23	24
L1	55.5	66	76.5	87	97.5	108	118.5	129	139.5	150	160.5	171	181.5	192	202.5	213	223.5	234	244.5	255	265.5	276	286.5	297
L2	112.5	123	133.5	144	154.5	165	175.5	186	196.5	207	217.5	228	238.5	249	259.5	270	280.5	291	301.5	312	322.5	333	343.5	354
L3	137.5	150	162.5	175	175	187.5	200	212.5	225	237.5	237.5	250	262.5	275	287.5	300	300	312.5	325	337.5	350	362.5	375	375
L4	148	160.5	173	185.5	185.5	198	210.5	223	235.5	248	248	260.5	273	285.5	298	310.5	310.5	323	335.5	348	360.5	373	385.5	385.5

VV5QC21

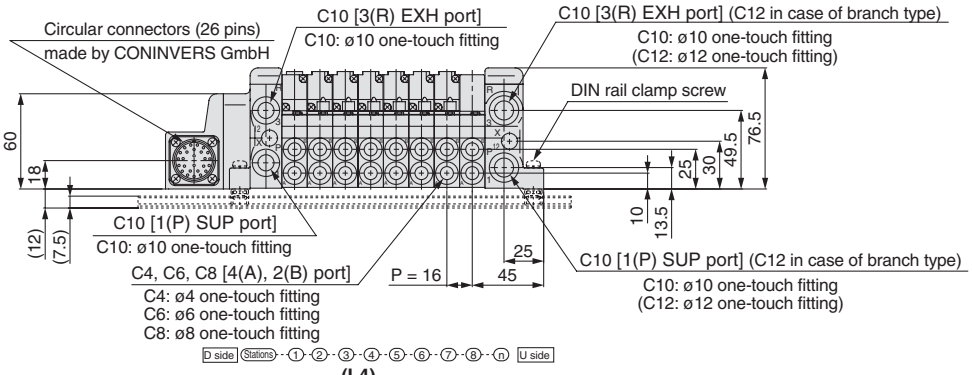

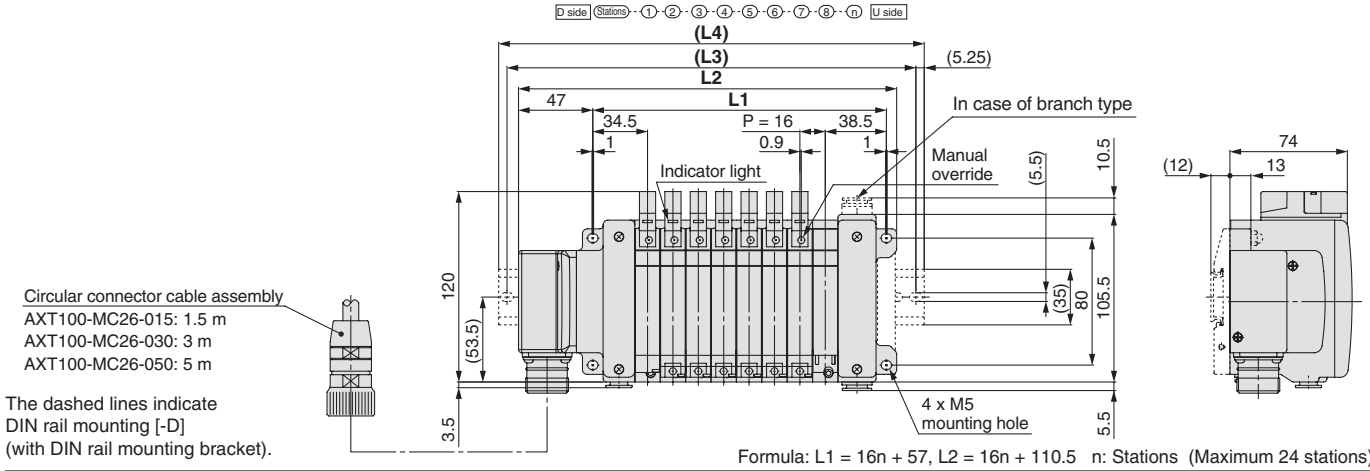

Formula: L1 = 16n + 57, L2 = 16n + 110.5 n: Stations (Maximum 24 stations)

L \ n	1	2	3	4	5	6	7	8	9	10	11	12	13	14	15	16	17	18	19	20	21	22	23	24
L1	73	89	105	121	137	153	169	185	201	217	233	249	265	281	297	313	329	345	361	377	393	409	425	441
L2	126.5	142.5	158.5	174.5	190.5	206.5	222.5	238.5	254.5	270.5	286.5	302.5	318.5	334.5	350.5	366.5	382.5	398.5	414.5	430.5	446.5	462.5	478.5	494.5
L3	150	162.5	187.5	200	212.5	237.5	250	262.5	275	300	312.5	325	350	362.5	375	387.5	412.5	425	437.5	450	475	487.5	500	525
L4	160.5	173	198	210.5	223	248	260.5	273	285.5	310.5	323	335.5	360.5	373	385.5	398	423	435.5	448	460.5	485.5	498	510.5	535.5

Construction

VQC1000 Plug-in Unit: Main Parts/Replacement Parts

Metal seal

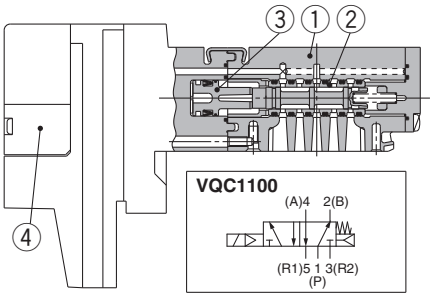

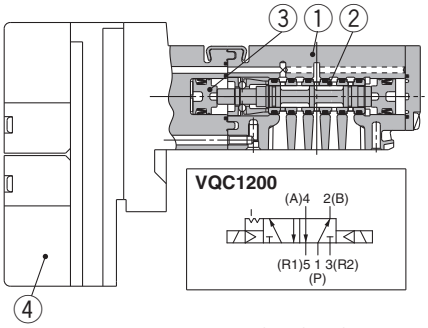

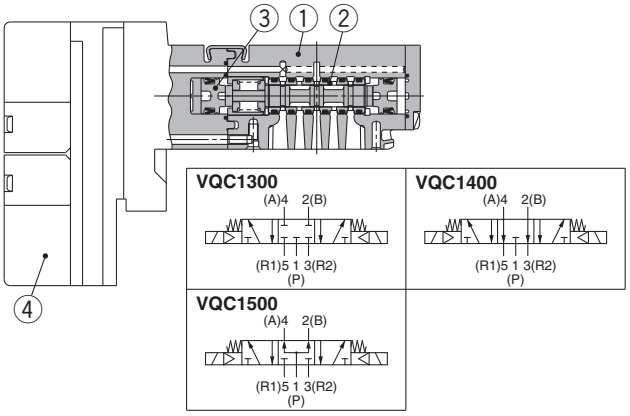

Rubber seal

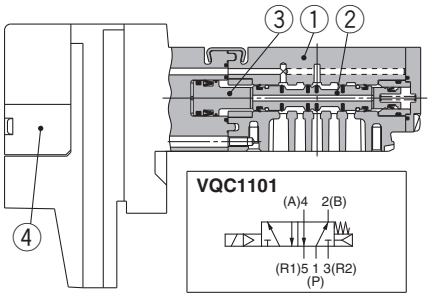

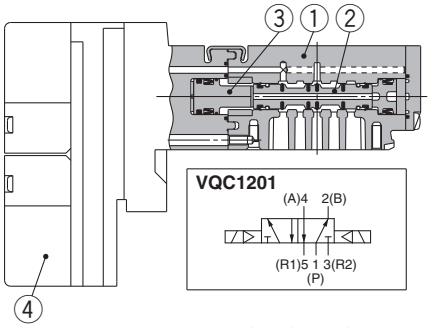

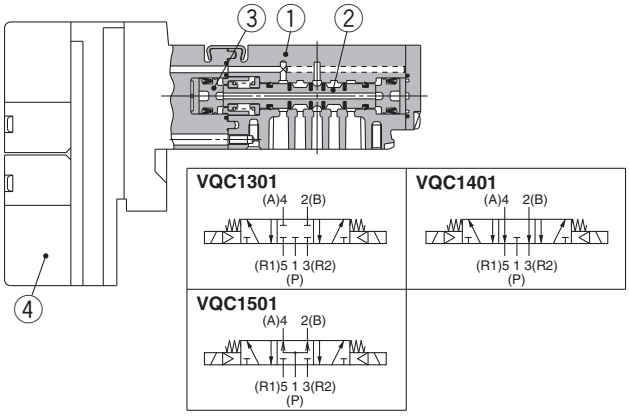

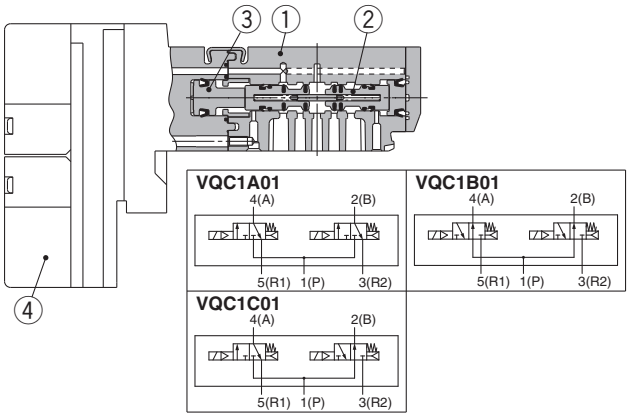

Component Parts

No.	Description	Material	Note
1	**Body**	Zinc die-casted	
2	**Spool/Sleeve**	Stainless steel	
3	**Piston**	Resin	
4	**Pilot valve assembly**	—	

Note) Refer to page 48 for “How to Order Pilot Valve Assembly.”

Component Parts

No.	Description	Material	Note
1	**Body**	Zinc die-casted	
2	**Spool valve**	Aluminum, HNBR	
3	**Piston**	Resin	
4	**Pilot valve assembly**	—	

Note) Refer to page 48 for “How to Order Pilot Valve Assembly.”

VQC2000 Plug-in Unit: Main Parts/Replacement Parts

Metal seal

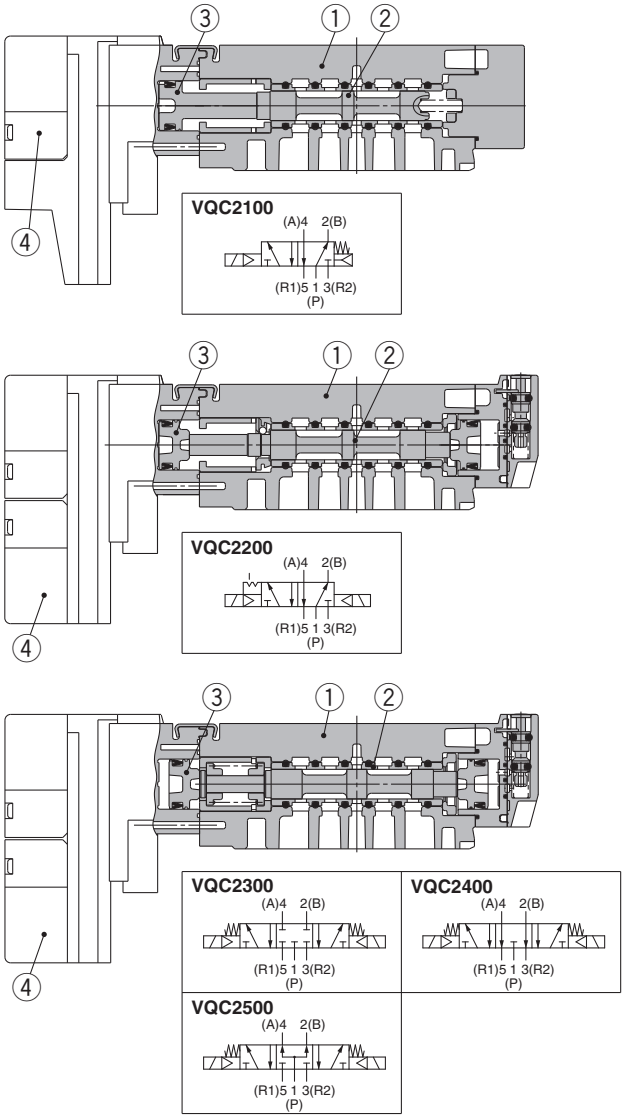

Component Parts

No.	Description	Material	Note
1	**Body**	Zinc die-casted	
2	**Spool/Sleeve**	Stainless steel	
3	**Piston**	Resin	
4	**Pilot valve assembly**	—	

Note) Refer to page 48 for “How to Order Pilot Valve Assembly.”

Rubber seal

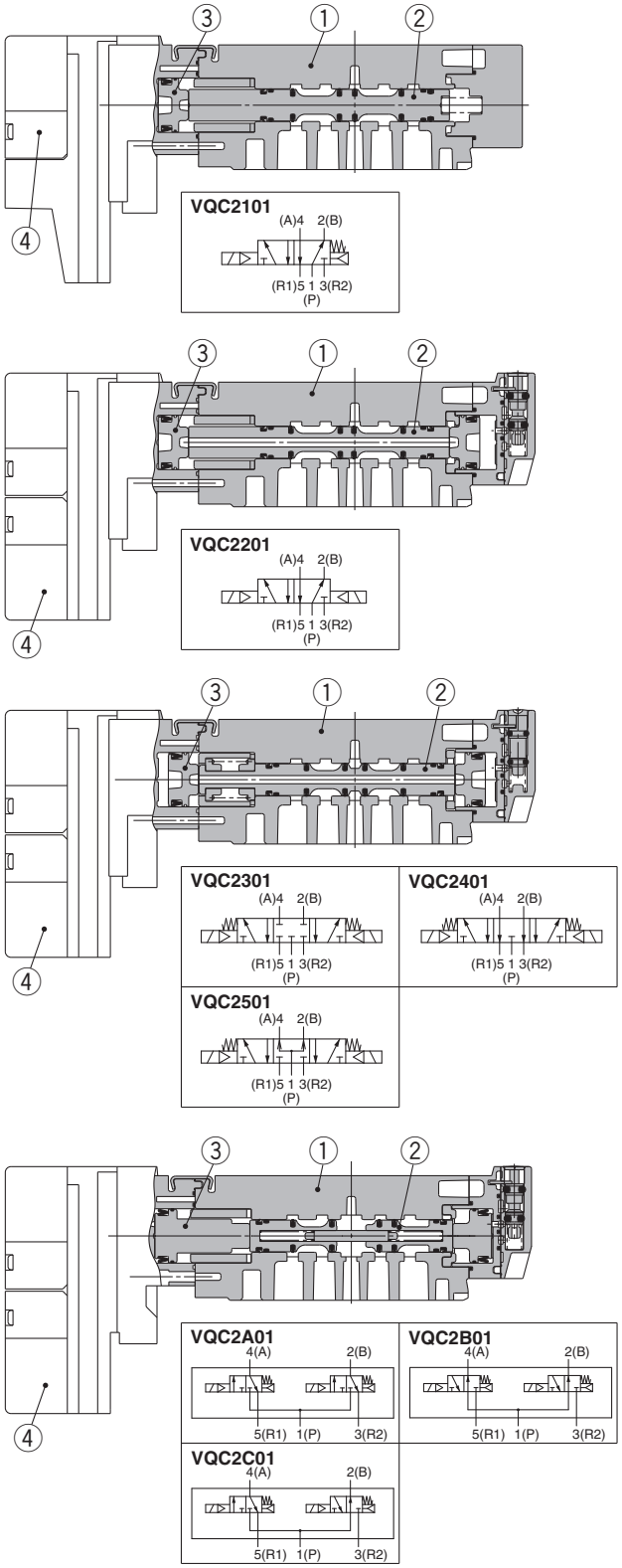

Component Parts

No.	Description	Material	Note
1	**Body**	Zinc die-casted	
2	**Spool valve**	Aluminum, HNBR	
3	**Piston**	Resin	
4	**Pilot valve assembly**	—	

Note) Refer to page 48 for “How to Order Pilot Valve Assembly.”

Exploded View of Manifold

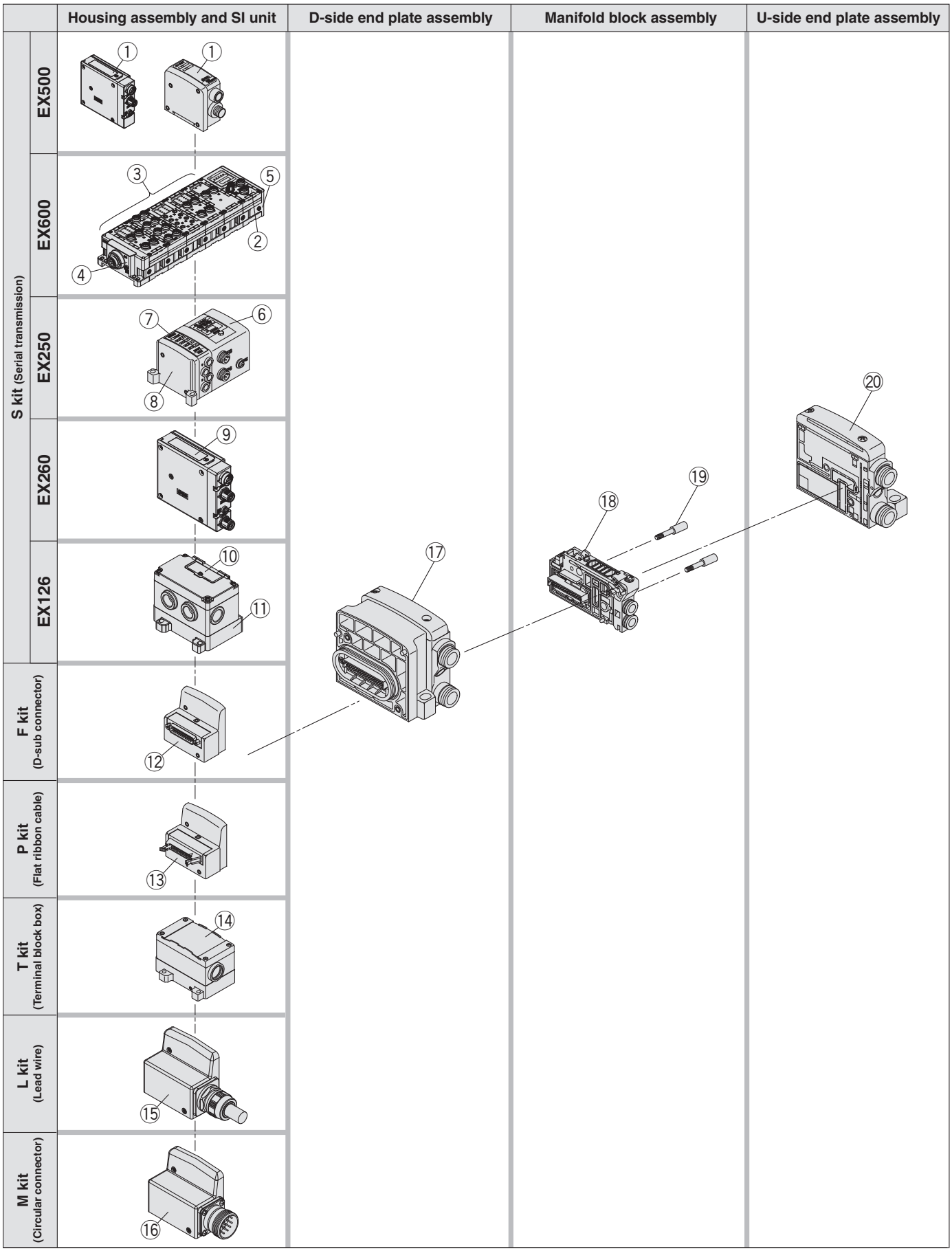

Manifold Assembly Part No.

Housing Assembly and SI Unit/Input Block

No.	Description	Part no.	Note
①	SI unit	EX500-S103	EtherNet/IP™, PROFINET PNP (Negative common)
		EX500-Q001	DeviceNet™, PROFIBUS DP, EtherNet/IP™ NPN (Positive common)
		EX500-Q101	DeviceNet™, PROFIBUS DP, EtherNet/IP™ PNP (Negative common)
②	SI unit	EX600-SDN1A	DeviceNet™ PNP (Negative common)
		EX600-SDN2A	DeviceNet™ NPN (Positive common)
		EX600-SMJ1	CC-Link PNP (Negative common)
		EX600-SMJ2	CC-Link NPN (Positive common)
		EX600-SPR1A	PROFIBUS DP PNP (Negative common)
		EX600-SPR2A	PROFIBUS DP NPN (Positive common)
		EX600-SEN1	EtherNet/IP™ (1 port) PNP (Negative common)
		EX600-SEN2	EtherNet/IP™ (1 port) NPN (Positive common)
		EX600-SEN3	EtherNet/IP™ (2 port) PNP (Negative common)
		EX600-SEN4	EtherNet/IP™ (2 port) NPN (Positive common)
		EX600-SEC1	EtherCAT PNP (Negative common)
		EX600-SEC2	EtherCAT NPN (Positive common)
		EX600-SPN1	PROFINET PNP (Negative common)
		EX600-SPN2	PROFINET NPN (Positive common)
		EX600-WEN1 Note)	Base module EtherNet/IP™ PNP (Negative common)
		EX600-WEN2 Note)	Base module EtherNet/IP™ NPN (Positive common)
		EX600-WPN1 Note)	Base module PROFINET PNP (Negative common)
		EX600-WPN2 Note)	Base module PROFINET NPN (Positive common)
		EX600-WSN1 Note)	Remote module PNP (Negative common)
		EX600-WSN2 Note)	Remote module NPN (Positive common)
③	Digital input unit	EX600-DXNB	NPN input, M12 connector, 5 pins (4 pcs.), 8 inputs
		EX600-DXPB	PNP input, M12 connector, 5 pins (4 pcs.), 8 inputs
		EX600-DXNC	NPN input, M8 connector, 3 pins (8 pcs.), 8 inputs
		EX600-DXNC1	NPN input, M8 connector, 3 pins (8 pcs.), 8 inputs, with open circuit detection
		EX600-DXPC	PNP input, M8 connector, 3 pins (8 pcs.), 8 inputs
		EX600-DXPC1	PNP input, M8 connector, 3 pins (8 pcs.), 8 inputs, with open circuit detection
		EX600-DXND	NPN input, M12 connector, 5 pins (8 pcs.), 16 inputs
		EX600-DXPD	PNP input, M12 connector, 5 pins (8 pcs.), 16 inputs
		EX600-DXNE	NPN input, D-sub connector, 25 pins, 16 inputs
		EX600-DXPE	PNP input, D-sub connector, 25 pins, 16 inputs
		EX600-DXNF	NPN input, Spring type terminal box, 32 pins, 16 inputs
		EX600-DXPF	PNP input, Spring type terminal box, 32 pins, 16 inputs
	Digital output unit	EX600-DYNB	NPN output, M12 connector, 5 pins (4 pcs.), 8 outputs
		EX600-DYPB	PNP output, M12 connector, 5 pins (4 pcs.), 8 outputs
		EX600-DYNE	NPN output, D-sub connector, 25 pins, 16 outputs
		EX600-DYPE	PNP output, D-sub connector, 25 pins, 16 outputs
		EX600-DYNF	NPN output, Spring type terminal box, 32 pins, 16 outputs
		EX600-DYPF	NPN output, Spring type terminal box, 32 pins, 16 outputs
	Digital input/output unit	EX600-DMNE	NPN input/output, D-sub connector, 25 pins, 8 inputs/outputs
		EX600-DMPE	PNP input/output, D-sub connector, 25 pins, 8 inputs/outputs
		EX600-DMNF	NPN input/output, Spring type terminal box, 32 pins, 8 inputs/outputs
		EX600-DMPF	PNP input/output, Spring type terminal box, 32 pins, 8 inputs/outputs
	Analog input unit	EX600-AXA	M12 connector, 5 pins (2 pcs.), 2-channel input
	Analog output unit	EX600-AYA	M12 connector, 5 pins (2 pcs.), 2-channel output
	Analog input/output unit	EX600-AMB	M12 connector, 5 pins (4 pcs.), 2-channel inputs/outputs
④	End plate	EX600-ED2	M12 connector, 5 pins, Max. supply current 2 A
		EX600-ED2-2	M12 connector, 5 pins, Max. supply current 2 A, with DIN rail mounting bracket
		EX600-ED3	7/8 inch connector, 5 pins, Max. supply current 8 A
		EX600-ED3-2	7/8 inch connector, 5 pins, Max. supply current 8 A, with DIN rail mounting bracket
		EX600-ED4	M12 connector, (4 pins/5 pins), IN/OUT
		EX600-ED4-2	M12 connector, (4 pins/5 pins), IN/OUT, with DIN rail mounting bracket
		EX600-ED5	M12 connector, (4 pins/5 pins), IN/OUT
		EX600-ED5-2	M12 connector, (4 pins/5 pins), IN/OUT, with DIN rail mounting bracket
⑤	Valve plate	EX600-ZMV1	Enclosed parts: round head screws (M4 x 6) 2 pcs., round head screws (M3 x 8) 4 pcs.

Note) The wireless system is suitable for use only in a country where it is in accordance with the Radio Act and regulations of that country.

Manifold Assembly Part No.

Housing Assembly and SI Unit/Input Block

No.	Description	Part no.	Note
⑥	SI unit	EX250-SPR1	PROFIBUS DP PNP (Negative common)
		EX250-SMJ2	CC-LinkNPN (Positive common)
		EX250-SAS3	AS-Interface, 8 in/8 out, 31 slave modes, 2 power supply systems PNP (Negative common)
		EX250-SAS5	AS-Interface, 4 in/4 out, 31 slave modes, 2 power supply systems PNP (Negative common)
		EX250-SAS7	AS-Interface, 8 in/8 out, 31 slave modes, 1 power supply system PNP (Negative common)
		EX250-SAS9	AS-Interface, 4 in/4 out, 31 slave modes, 1 power supply system PNP (Negative common)
		EX250-SCA1A	CANopen PNP (Negative common)
		EX250-SDN1	DeviceNet™ PNP (Negative common)
		EX250-SEN1	EtherNet/IP™ PNP (Negative common)
⑦	Input block	EX250-IE1	M12, 2 inputs
		EX250-IE2	M12, 4 inputs
		EX250-IE3	M8, 4 inputs
⑧	End plate assembly	EX250-EA1	Standard
		EX250-EA2	For DIN rail mounting
⑨	SI unit	EX260-SDN1	DeviceNet™, M12 connector, 32 pins PNP (Negative common)
		EX260-SDN2	DeviceNet™, M12 connector, 32 pins NPN (Positive common)
		EX260-SDN3	DeviceNet™, M12 connector, 16 pins PNP (Negative common)
		EX260-SDN4	DeviceNet™, M12 connector, 16 pins NPN (Positive common)
		EX260-SPR1	PROFIBUS DP, M12 connector, 32 pins PNP (Negative common)
		EX260-SPR2	PROFIBUS DP, M12 connector, 32 pins NPN (Positive common)
		EX260-SPR3	PROFIBUS DP, M12 connector, 16 pins PNP (Negative common)
		EX260-SPR4	PROFIBUS DP, M12 connector, 16 pins NPN (Positive common)
		EX260-SPR5	PROFIBUS DP, D-sub connector, 32 pins PNP (Negative common)
		EX260-SPR6	PROFIBUS DP, D-sub connector, 32 pins NPN (Positive common)
		EX260-SPR7	PROFIBUS DP, D-sub connector, 16 pins PNP (Negative common)
		EX260-SPR8	PROFIBUS DP, D-sub connector, 16 pins NPN (Positive common)
		EX260-SMJ1	CC-Link, M12 connector, 32 pins PNP (Negative common)
		EX260-SMJ2	CC-Link, M12 connector, 32 pins NPN (Positive common)
		EX260-SMJ3	CC-Link, M12 connector, 16 pins PNP (Negative common)
		EX260-SMJ4	CC-Link, M12 connector, 16 pins NPN (Positive common)
		EX260-SEC1	EtherCAT, M12 connector, 32 pins PNP (Negative common)
		EX260-SEC2	EtherCAT, M12 connector, 32 pins NPN (Positive common)
		EX260-SEC3	EtherCAT, M12 connector, 16 pins PNP (Negative common)
		EX260-SEC4	EtherCAT, M12 connector, 16 pins NPN (Positive common)
		EX260-SPN1	PROFINET, M12 connector, 32 pins PNP (Negative common)
		EX260-SPN2	PROFINET, M12 connector, 32 pins NPN (Positive common)
		EX260-SPN3	PROFINET, M12 connector, 16 pins PNP (Negative common)
		EX260-SPN4	PROFINET, M12 connector, 16 pins NPN (Positive common)
		EX260-SEN1	EtherNet/IP™, M12 connector, 32 pins PNP (Negative common)
		EX260-SEN2	EtherNet/IP™, M12 connector, 32 pins NPN (Positive common)
		EX260-SEN3	EtherNet/IP™, M12 connector, 16 pins PNP (Negative common)
		EX260-SEN4	EtherNet/IP™, M12 connector, 16 pins NPN (Positive common)
		EX260-SPL1	EtherNet POWERLINK, M12 connector, 32 outputs PNP (Negative common)
		EX260-SPL3	EtherNet POWERLINK, M12 connector, 16 outputs PNP (Negative common)
⑩	SI unit	EX126D-SMJ1	CC-Link NPN (Positive common)
⑪	Terminal block plate	VVQC1000-74A-2	For EX126 SI unit mounting
⑫	D-sub connector housing assembly	VVQC1000-F25-1	F kit, 25 pins
⑬	Flat ribbon cable housing assembly	VVQC1000-P26-1	P kit, 26 pins
		VVQC1000-P20-1	P kit, 20 pins
⑭	Terminal block box housing assembly	VVQC1000-T0-1	T kit
⑮	Lead wire housing assembly	VVQC1000-L25-0-1	L kit with 0.6 m lead wire
		VVQC1000-L25-1-1	L kit with 1.5 m lead wire
		VVQC1000-L25-2-1	L kit with 3.0 m lead wire
⑯	Circular connector housing assembly	VVQC1000-M26-1	M kit, 26 pins

Manifold Assembly Part No.

<D-Side End Plate Assembly>

⑰ **D-side end plate assembly part no.**

VVQC 1 000-3A-1- □ - □

Series

1	VQC1000
2	VQC2000

Port size

Symbol	VQC1000	VQC2000
C8	●	
C10		●
N9	●	
N11		●

Option

—	Common EXH
R	External pilot
S	Direct EXH outlet with built-in silencer

<U-Side End Plate Assembly>

⑳ **U-side end plate assembly part no.**

VVQC 1 000-2A- 1 - C8 - □

Series

1	VQC1000
2	VQC2000

Supply/Exhaust port entry direction

1	Cylinder port side
2 Note)	Branch type

Note) VQC2000 only

Port size

Symbol	VQC1000	VQC2000
C8	●	
C10		●
C12		●
N9	●	
N11		●
N13		●

Option

—	Common EXH
R	External pilot
S	Direct EXH outlet with built-in silencer

<Manifold Block Assembly>

⑱ **Manifold block assembly part no.**

VVQC 1 000-1A- D - C6 - □

Series

1	VQC1000
2	VQC2000

Note) Tie-rods (2 pcs.) for additional stations included.

Wiring specifications

D	Double wiring
S	Single wiring

Port size

Symbol	Port size	VQC1000	VQC2000
C3	For ø3.2 One-touch fitting	●	
C4	For ø4 One-touch fitting	●	●
C6	For ø6	●	●
C8	For ø8		●
N1	For ø1/8"	●	
N3	For ø5/32"	●	●
N7	For ø1/4"	●	●
N9	For ø5/16"		●
M5	For M5 thread	●	

Option

—	None
B	With back pressure check valve

<Replacement Parts>

Pilot valve assembly

V112 □ - 5 A

Coil voltage

5	24 VDC
6	12 VDC

Function

—	Standard (0.4 W)
B	High-speed response type (0.95 W)
K	High-pressure type (1.0 MPa, 0.95 W)

Note 1) Common to single solenoid and double solenoid
Note 2) The voltage (including light/surge voltage suppressor), positive common and negative common cannot be changed by changing the pilot valve assembly.

⑲ **Tie-rod assembly part no. (2 pcs.)**

VQC1000	VVQC1000-TR-□
VQC2000	VVQC2000-TR-□

Note 1) Please order when reducing the number of manifold stations. When increasing the number of stations, additional orders are not required since they are included in the manifold block assembly.
Note 2) □: Stations 02 to 24

VQC1000: Manifold Optional Parts

Blanking plate assembly
VVQ1000-10A-1

Symbol

It is used by attaching on the manifold block for being prepared for removing a valve for maintenance reasons or planning to mount a spare valve, etc.

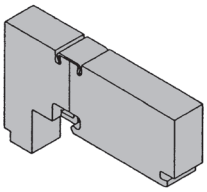

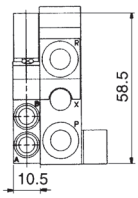

Individual SUP spacer
VVQ1000-P-1-$^{C6}_{N7}$

When the same manifold is to be used for different pressures, individual SUP spacers are used as SUP ports for different pressures. (One station space is occupied.)
Block both sides of the station, for which the supply pressure from the individual SUP spacer is used, with SUP block plates. (Refer to the application example.)

- ∗ Specify the spacer mounting position and SUP block plate position by means of the manifold specification sheet. The block plate is used in one or two places for one set. (Two SUP block plates for blocking SUP passage are attached to the individual SUP spacer.)
- ∗ As a standard, electric wiring is connected to the position of the manifold station where the individual SUP spacer is mounted.
- ∗ If wiring is not required for stations equipped with spacers, enter "X" in the special wiring specifications column in the manifold specification sheet.

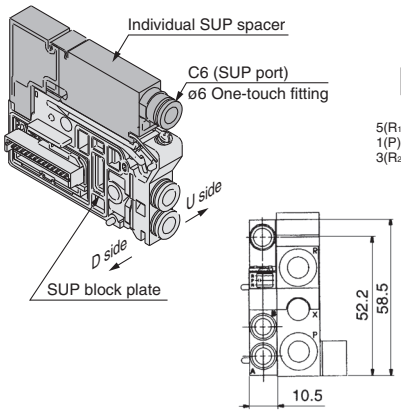

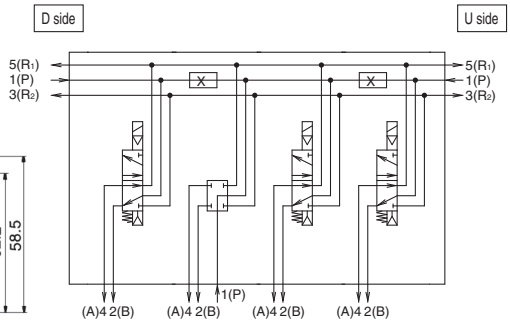

Individual EXH spacer
VVQ1000-R-1-$^{C6}_{N7}$

When valve exhaust affects other stations due to the circuit configuration, this spacer is used for individual valve exhaust. (One station space is occupied.)
Block both sides of the individual valve EXH station. (Refer to the application example.)

- ∗ Specify the spacer mounting position, as well as the EXH passage blocking position by means of the manifold specification sheet. The block plate is used in one or two places for one set.
- ∗ An EXH block base assembly is used in the blocking position when ordering an EXH spacer incorporated with a manifold. However, do not order an EXH block base assembly because it is attached to the spacer.
  When separately ordering an individual EXH spacer, separately order an EXH block base assembly because it is not attached to the spacer.
- ∗ As a standard, electric wiring is connected to the position of the manifold station where the individual EXH spacer is mounted.
- ∗ If wiring is not required for stations equipped with spacers, enter "X" in the special wiring specifications column in the manifold specification sheet.
- ∗ Do not install any back pressure check valve on the manifold station, on which the spacer is to be mounted. When installing the back pressure check valve on other manifold station, be sure to specify the manifold station position on the manifold specification sheet instead of ordering by specifying the manifold option symbol "B".

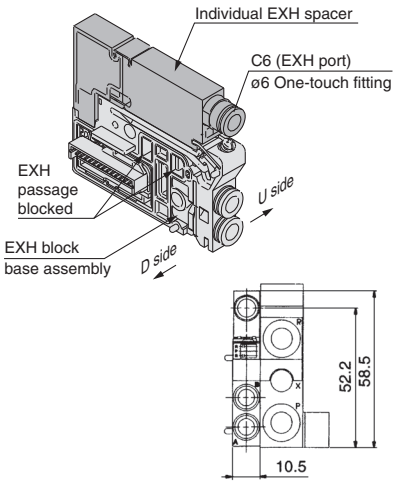

Description/Model \ Stations		1	2	3	4	5	6	7
Valve	Single	●		●	●			
	⋮							
Option	Individual EXH spacer VVQ1000-R-1-C6		●					
	EXH blocking position: Specify 2 places.	●		●				

Individual EXH spacer + EXH block base assembly | **Valve + EXH block base assembly**

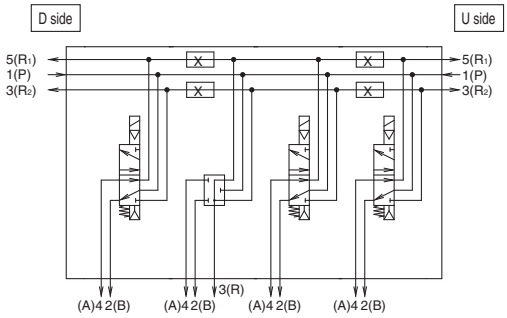

SUP block plate
VVQ1000-16A

When different pressures are supplied to a manifold, a SUP block plate is used to block the stations under different pressures.

- ∗Specify the mounting position by means of the manifold specification sheet.

<Block indication label>
Indication labels to confirm the blocking position are attached (Each for SUP passage and SUP/EXH passage blocking positions).

- ∗ When ordering a block plate incorporated with a manifold, a block indication label is attached to the manifold.

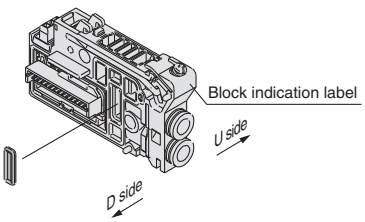

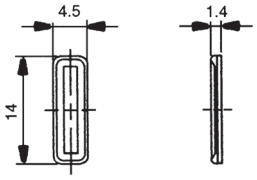

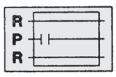

SUP passage blocked

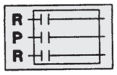

SUP/EXH passage blocked

Blanking plate with connector

VVQ1000-1C□-□

Connector

—	Without connector
1	With connector/2-wire
2	With connector/4-wire

Connector lead wire length (mm)

—	300	20	2000
6	600	25	2500
10	1000	30	3000
15	1500		

Blanking plate with a connector for individually outputting electricity to drive a single valve or equipment that are not on the manifold base.
∗ When "N" is suffixed to the end of the name plate, the plate will be different from a standard shape.
Note) Electric current should be 1A or less (including the mounted valves).

Symbol

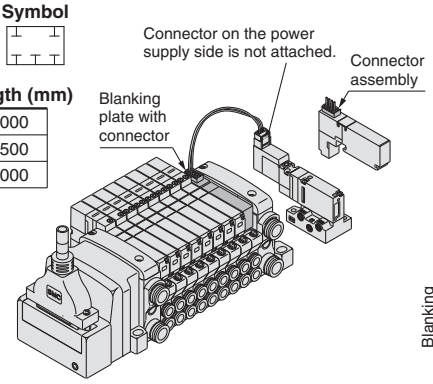

Connector assembly part no.

AXT661-43A-6

43	4-wire
44	2-wire

Lead wire length (mm)

—	300
6	600
10	1000
20	2000
30	3000

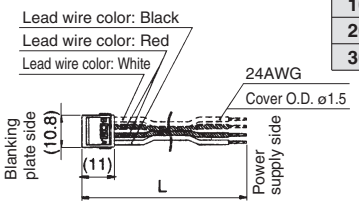

EXH block base assembly

VVQC1000-19A-□-(C3/C4/C6/M5/N1/N3/N7)

Wiring specifications

S	Single wiring
D	Double wiring

The manifold block assembly is used between stations for which exhaust is desired to be divided when valve exhaust affects other stations due to the circuit configuration. The EXH passage on the D-side is blocked in the EXH block base assembly. It is also used in combination with an individual EXH spacer for individual exhaust.

<Block indication label>
Indication labels to confirm the blocking position are attached (Each for EXH passage and SUP/EXH passage blocking positions).
∗ When ordering this option incorporated with a manifold, a block indication label is attached to the manifold.

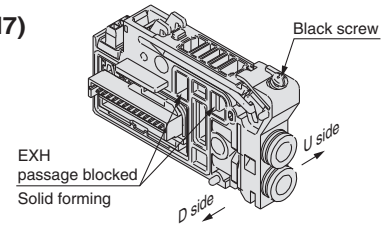

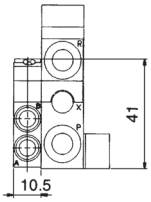

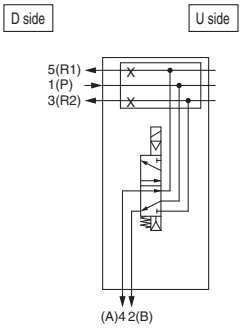

∗ Specify the mounting position by means of the manifold specification sheet.
∗ When ordering this option incorporated with a manifold, specify the EXH block base assembly part number with "∗" in front of it beneath the manifold part number.

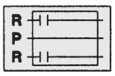

EXH passage blocked

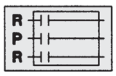

SUP/EXH passage blocked

Back pressure check valve assembly [-B]

VVQ1000-18A

It prevents cylinder from malfunctioning by other valve's exhaust entry. Insert it into R (EXH) port on the manifold side of a valve which is affected. It is effective when a single-acting cylinder is used or an exhaust center type solenoid valve is used.
∗ When ordering it being mounted on all manifold stations, suffix "-B" to the end of the manifold part number.
Note) When a back pressure check valve is desired, and is to be installed only in certain manifold stations, clearly indicate the part number and specify the mounting station by means of the manifold specification sheet.

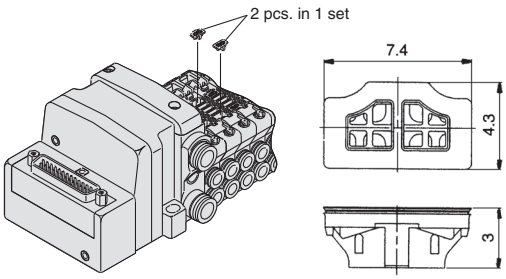

(Precautions)
1. The manifold installed type back pressure check valve assembly is assembly parts with a check valve structure. However, since slight air leakage against the back pressure is allowed due to its structure, adverse effects of the back pressure due to increase in exhaust resistance cannot be prevented if the manifold exhaust port and other exhaust ports are put together for piping or if the piping diameter is narrowed. As a result, this may cause the actuator and air operated equipment to malfunction. So, be careful not to restrict the exhaust air.
2. When a back pressure check valve is mounted, the effective area of the valve will decrease by about 20%.

Name plate [-N]

VVQ1000-N/NC-Station (1 to Max. stations) (-X4)

N: Standard
NC: For mounting blanking plate with connector

-X4: For mounting slide locking type manual valve

It is a transparent resin plate for placing a label that indicates solenoid valve function, etc. Insert it into the groove on the side of the end plate and bend it as shown in the figure.
∗ When the blanking plate with connector is mounted, it automatically will be "VVQ1000-NC-n"
∗ When the slide locking type manual valve is mounted, it automatically will be "VVQ1000-N-n-X4"
∗ When ordering this option incorporated with a manifold, suffix "-N" to the end of the manifold part number.

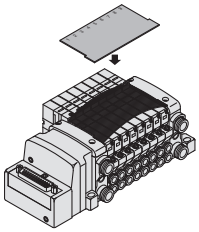

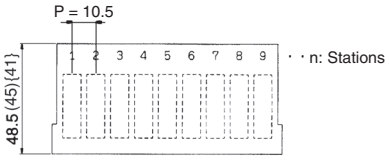

Note) ( ): VVQ1000-NC-n
Note) { }: VVQ1000-N-n-X4

Blanking plug (For One-touch fittings)

KQ2P-□

It is inserted into an unused cylinder port and SUP/EXH ports. Purchasing order is available in units of 10 pieces.

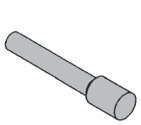

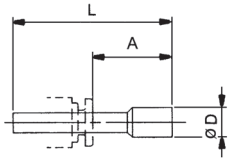

Dimensions

Applicable fitting size ød	Model	A	L	D	Applicable fitting size ød	Model	A	L	D
3.2	KQ2P-23	16	31.5	5	1/8"	KQ2P-01	16	31.5	5
4	KQ2P-04	16	32	6	5/32"	KQ2P-03	16	32	6
6	KQ2P-06	18	35	8	1/4"	KQ2P-07	18	35	8.5
8	KQ2P-08	20.5	39	10	5/16"	KQ2P-09	20.5	39	10

VQC1000: Manifold Optional Parts

Port plug
VVQ0000-58A

The plug is used to block the cylinder port.
∗ When ordering this option incorporated with a manifold, indicate “CM” for the port size of the manifold part number, as well as, the mounting position and number of stations and cylinder port mounting positions, 4(A) and 2(B) by means of the manifold specification sheet.
∗ Gently screw an M3 screw in the port plug hole and pull it for removal.

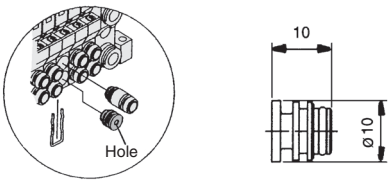

Elbow fitting assembly
VVQ1000-F-L(C3/C4/C6/M5/N1/N3/N7)

It is used for piping that extends upward or downward from the manifold.
∗ When ordering this option incorporated with a manifold, indicate “L□” or “B□” for the manifold port size (when installed in all stations.)
When installing it in part of the manifold stations, specify the elbow fitting assembly part number and the mounting position and number of stations by means of the manifold specification sheet.
∗ When mounting elbow fitting assembly on the edge of manifold station and a silencer on EXH port, select a silencer, AN15-C08.
A silencer (AN200-KM8) is interfered with fittings.

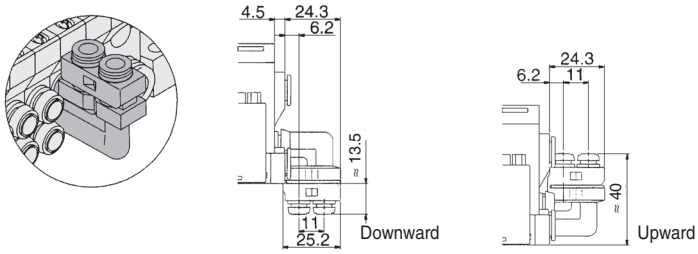

DIN rail mounting bracket [-D]
VVQ1000-57A
{For F/L/M/P/S (EX500) kit}
VVQC1000-57A-S
{For S (EX250) kit}
VVQC1000-57A-T (For T kit)

It is used for mounting a manifold on a DIN rail.
∗ When ordering this option incorporated with a manifold, suffix “-D” to the end of the manifold part number.

1 set of DIN rail mounting bracket is used for 1 manifold (2 DIN rail mounting brackets).

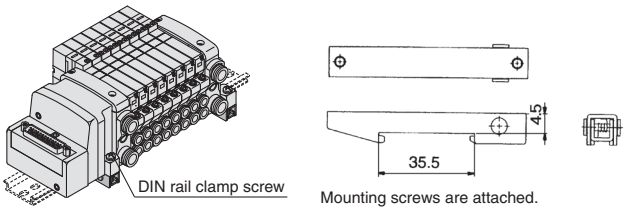

Direct EXH outlet with built-in silencer [-S]

This is a type with an exhaust outlet atop the manifold end plate. The built-in silencer exhibits an excellent noise suppression effect. (Noise reduction: 30 dB)
∗ When ordering this option incorporated with a manifold, suffix “-S” to the end of the manifold part number.

Note) A large quantity of drainage generated in the air source results in exhaust of air together with drainage.
● Refer to page 58 for maintenance.

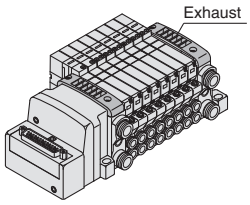

Dual flow fitting assembly
VVQ1000-52A-$^{C8}_{N9}$

This is a fitting to multiply the flow rate by combining the outputs of 2-valve stations. It is used for driving a large bore cylinder. This is a One-touch fitting for a port size of ø8 or ø5/16”.
∗ The port size of the manifold part number is “MM”.
Clearly indicate the dual flow fitting assembly part number and specify the mounting positions by means of the manifold specification sheet.
∗ In dual flow fitting assembly, a special clip which is combined in one-piece of 2 stations is attached as a holding clip.

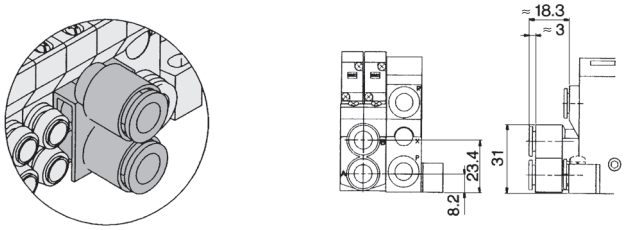

Silencer (For EXH port)

This silencer is to be inserted into the EXH port (One-touch fittings) of the common exhaust type.
∗ When mounting elbow fitting assembly (VVQ1000-F-L□) on the edge of manifold station, select a silencer, AN15-C08. A silencer (AN200-KM8) is interfered with fittings.

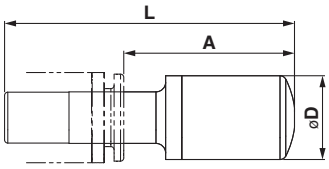

Dimensions

Series	Applicable fitting size ø**d**	Model	**A**	**L**	**D**	Effective area (mm^2)	Noise reduction (dB)
VQC1000	8	AN15-C08	26.5	45	13	20	30

Double check block (Separated) for VQC1000
VQ1000-FPG-□□-□

It is used on the outlet side piping to keep the cylinder in the intermediate position for long periods of time. Combining the double check block with a built-in pilot type double check valve and a 3-position exhaust center solenoid valve will enable the cylinder to stop in the middle or maintain its position for a long time.
The combination with a 2-position single/double solenoid valve will permit this block to be used for preventing the dropping at the cylinder stroke end when the SUP residual pressure is released.

Specifications

Max. operating pressure	0.8 MPa
Min. operating pressure	0.15 MPa
Ambient and fluid temp.	–5 to 50°C
Flow characteristics: C	0.60 dm³/(s·bar)
Max. operating frequency	180 c.p.m

Note) Based on JIS B 8375-1981
(Supply pressure: 0.5 MPa)

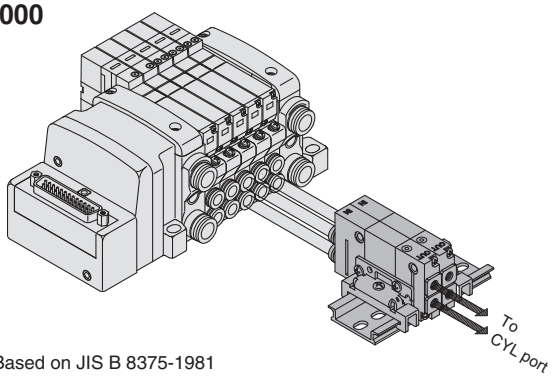

<Circuit diagram>

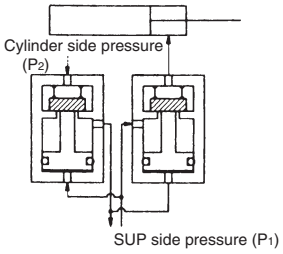

VVQ1000-FPG-02 1 set
∗ VQ1000-FPG-C6M5-D 2 pcs.

Dimensions

Single unit

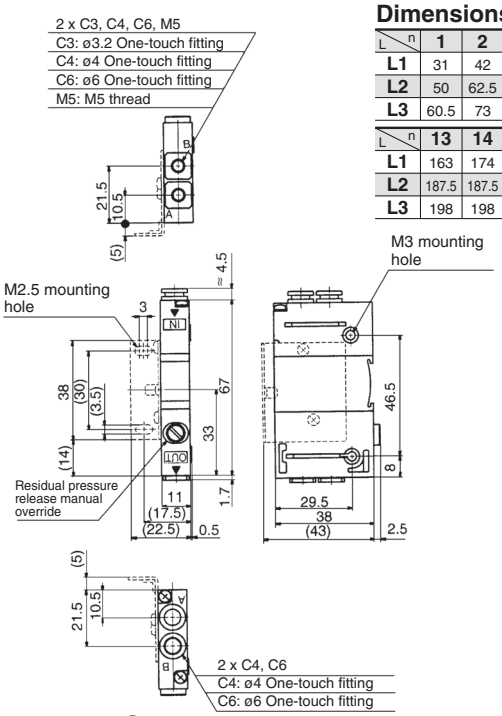

Dimensions

Formula L1 = 11n + 20 n: Station (Maximum 24)

L \ n	1	2	3	4	5	6	7	8	9	10	11	12
L1	31	42	53	64	75	86	97	108	119	130	141	152
L2	50	62.5	75	87.5	100	112.5	125	125	137.5	150	162.5	175
L3	60.5	73	85.5	98	110.5	123	135.5	135.5	148	160.5	173	185.5

L \ n	13	14	15	16	17	18	19	20	21	22	23	24
L1	163	174	185	196	207	218	229	240	251	262	273	284
L2	187.5	187.5	200	212.5	225	237.5	250	250	262.5	275	287.5	300
L3	198	198	210.5	223	235.5	248	260.5	260.5	273	285.5	298	310.5

Manifold

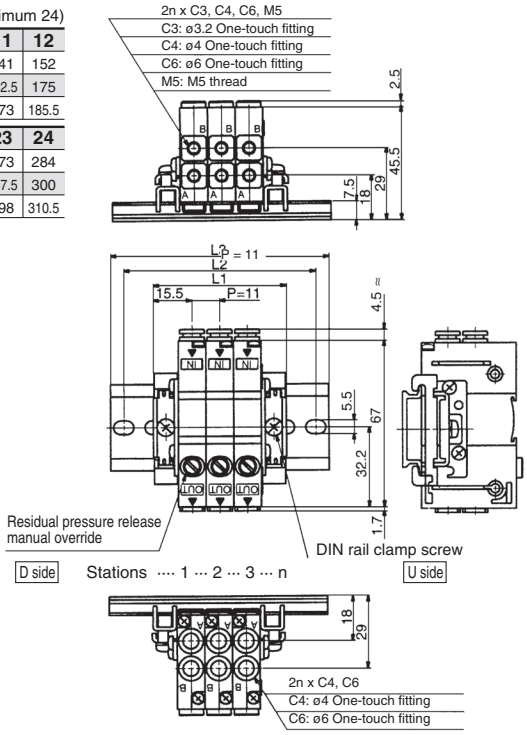

How to Order

Double check block

VQ1000-FPG- C4 M5 – F

IN side port size

M5	M5 thread
C3	ø3.2 One-touch fitting
C4	ø4 One-touch fitting
C6	ø6 One-touch fitting
N3	ø5/32" One-touch fitting
N7	ø1/4" One-touch fitting

OUT side port size

M5	M5 thread
C3	ø3.2 One-touch fitting
C4	ø4 One-touch fitting
C6	ø6 One-touch fitting
N3	ø5/32" One-touch fitting
N7	ø1/4" One-touch fitting

Option

—	None
F	With bracket
D	DIN rail mounting (For manifold)
N	Name plate

Note) When two or more symbols are specified, indicate them alphabetically. Example) -DN

Manifold (DIN rail mounting)

VVQ1000-FPG- 06

Stations

01	1 station
⋮	⋮
16	16 stations

When ordering a double check block, order the DIN rail mounting [-D].

<Ordering example>
VVQ1000-FPG-06···6-station manifold
∗VQ1000-FPG-C4M5-D, 3 sets
∗VQ1000-FPG-C6M5-D, 3 sets
} **Double check block**

Bracket Assembly

Part no.	Tightening torque
VQ1000-FPG-FB	0.22 to 0.25 N·m

<Example>

2-position **3-position exhaust center**

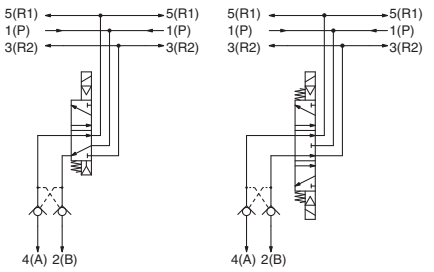

⚠ Caution

- Air leakage from the pipe between the valve and cylinder or from the fittings will prevent the cylinder from stopping for long periods of time. Check the leakage using neutral household detergent, such as dish washing soap. Also, check the cylinder's tube gasket, piston packing and rod packing for air leakage.
- Since One-touch fittings allow slight air leakage, screw piping (with M5 thread) is recommended when stopping the cylinder in the middle for long periods of time.
- Combining double check block with 3-position closed center or pressure center solenoid valve will not work.
- M5 fitting assembly is attached, not incorporated into the double check block. After screwing in the M5 fittings, mount the assembly on the double check block. {Tightening torque: 0.8 to 1.2 N·m}
- If the exhaust of the double check block is restricted too much, the cylinder may not operate properly and may not stop intermediately.
- Set the cylinder load so that the cylinder pressure will be within two times that of the supply pressure.

VQC2000: Manifold Optional Parts

Blanking plate assembly
VVQ2000-10A-1

Symbol

It is used by attaching on the manifold block for being prepared for removing a valve for maintenance reasons or planning to mount a spare valve, etc.

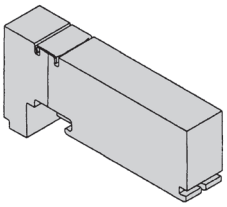

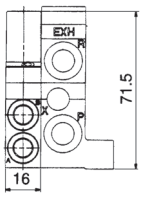

Individual SUP spacer
VVQ2000-P-1-C8/N9

When the same manifold is to be used for different pressures, individual SUP spacers are used as SUP ports for different pressures. (One station space is occupied.)
Block both sides of the station, for which the supply pressure from the individual SUP spacer is used, with SUP block plates. (Refer to the application example.)

- ∗ Specify the spacer mounting position and SUP passage blocking position by means of the manifold specification sheet.
  The block plate is used in one or two places for one set.
  (Two SUP block plates for blocking SUP passage are attached to the individual SUP spacer.)
- ∗ As a standard, electric wiring is connected to the position of the manifold station where the individual SUP spacer is mounted.
- ∗ If wiring is not required for stations equipped with spacers, enter "X" in the special wiring specifications column in the manifold specification sheet.

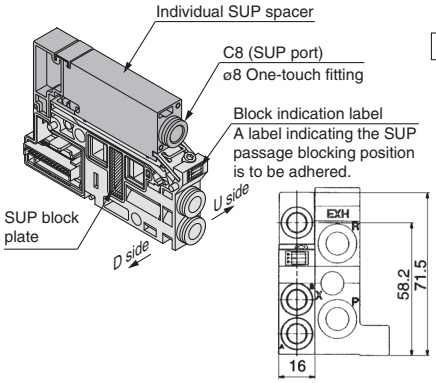

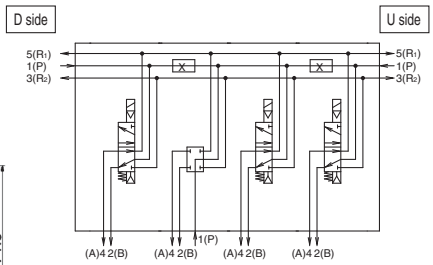

Individual EXH spacer
VVQ2000-R-1-C8/N9

When valve exhaust affects other stations due to the circuit configuration, this spacer is used for individual valve exhaust. (One station space is occupied.)
Block both sides of the individual valve EXH station. (Refer to the application example.)

- ∗ Specify the spacer mounting position, as well as the EXH passage blocking position by means of the manifold specification sheet. The block plate is used in one or two places for one set. (Four EXH block plates (2 sets) for blocking EXH passage are attached to the individual EXH spacer.)
- ∗ As a standard, electric wiring is connected to the position of the manifold station where the individual EXH spacer is mounted.
- ∗ If wiring is not required for stations equipped with spacers, enter "X" in the special wiring specifications column in the manifold specification sheet.
- ∗ Do not install any back pressure check valve on the manifold station, on which the spacer is to be mounted. When installing the back pressure check valve on other manifold station, be sure to specify the manifold station position on the manifold specification sheet instead of ordering by specifying the manifold option symbol "B".

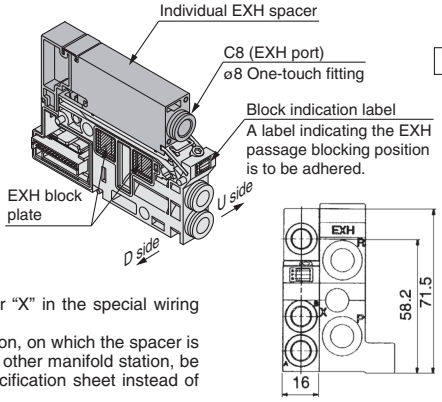

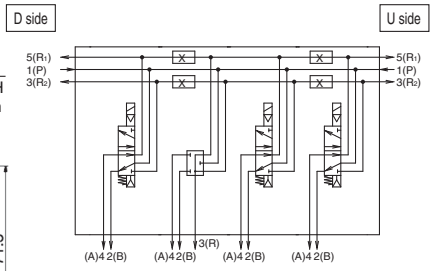

SUP block plate
VVQ2000-16A

When different pressures are supplied to a manifold, a SUP block plate is used to block the stations under different pressures.

∗ Specify the mounting position by means of the manifold specification sheet.

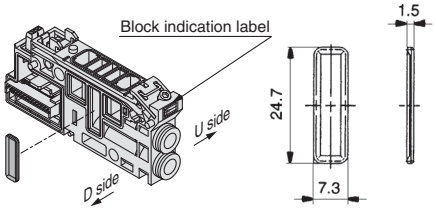

<Block indication label>
Indication labels to confirm the blocking position are attached. (Each for SUP passage and SUP/EXH passage blocking positions)

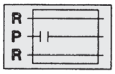

SUP passage blocked

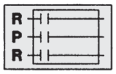

SUP/EXH passage blocked

∗ When ordering a block plate incorporated with a manifold, a block indication label is attached to the manifold.

EXH block plate
VVQ2000-19A

The EXH block plate is used between stations for which exhaust is desired to be divided when valve exhaust affects other stations configuration. It is also used in combination with an individual EXH spacer for individual exhaust.

∗ Specify the mounting position by means of the manifold specification sheet.

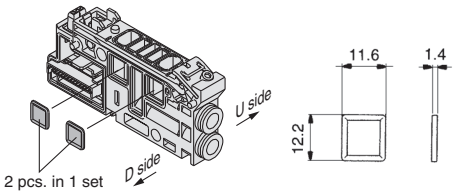

<Block indication label>
Indication labels to confirm the blocking position are attached. (Each for EXH passage and SUP/EXH passage blocking positions)

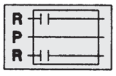

EXH passage blocked

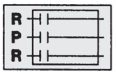

SUP/EXH passage blocked

∗ When ordering a block plate incorporated with a manifold, a block indication label is attached to the manifold.

Back pressure check valve assembly [-B]
VVQ2000-18A

It prevents cylinder malfunction caused by other valve exhaust entry. Insert it into R (EXH) port on the manifold side of a valve which is affected. It is effective when a single-acting cylinder is used or an exhaust center type solenoid valve is used.

- ∗ When ordering this option incorporated with a manifold, suffix "-B" to the end of the manifold part number.

Note) When a back pressure check valve is desired, and is to be installed only in certain manifold stations, clearly indicate the part number and specify the mounting position by means of the manifold specification sheet.

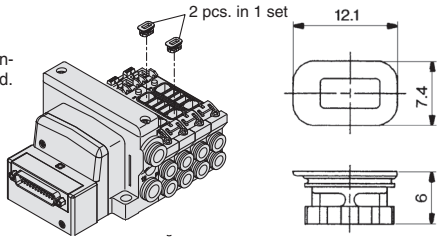

<Precautions>

1. The manifold installed type back pressure check valve assembly is assembly parts with a check valve structure. However, since slight air leakage against the back pressure is allowed due to its structure, adverse effects of the back pressure due to increase in exhaust resistance cannot be prevented if the manifold exhaust port and other exhaust ports are put together for piping or if the piping diameter is narrowed. As a result, this may cause the actuator and air operated equipment to malfunction. So, be careful not to restrict the exhaust air.
2. When a back pressure check valve is mounted, the effective area of the valve will decrease by about 20%.

Name plate [-N]
VVQ2000-N-Station (1 to Max. stations) (-X4)

-X4: For mounting slide locking type manual valve

It is a transparent resin plate for placing a label that indicates solenoid valve function, etc.
Insert it into the groove on the side of the end plate and bend it as shown in the figure.
∗ When the slide locking type manual valve is mounted, it automatically will be "VVQ2000-N-n-X4"
∗ When ordering this option incorporated with a manifold, suffix "-N" to the end of the manifold part number.

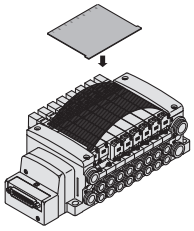

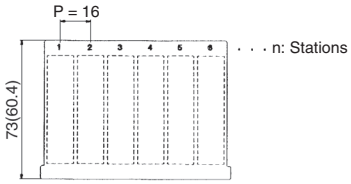

Note) ( ): VVQ2000-N-n-X4

Blanking plug (For One-touch fittings)
KQ2P-□

It is inserted into an unused cylinder port and SUP/EXH ports.
Purchasing order is available in units of 10 pieces.

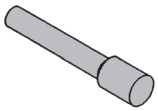

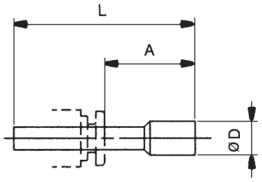

Dimensions

Applicable fitting size ø**d**	Model	A	L	D
4	**KQ2P-04**	16	32	6
6	**KQ2P-06**	18	35	8
8	**KQ2P-08**	20.5	39	10
10	**KQ2P-10**	22	43	12
5/32"	**KQ2P-03**	16	32	6
1/4"	**KQ2P-07**	18	35	8.5
5/16"	**KQ2P-09**	20.5	39	10
3/8"	**KQ2P-11**	22	43	11.5

Port plug
VVQ1000-58A

The plug is used to block the cylinder port.
∗ When ordering this option incorporated with a manifold, indicate "CM" for the port size of the manifold part number, as well as, the mounting station and cylinder port mounting positions, A and B, by means of the manifold specification sheet.

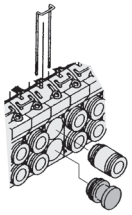

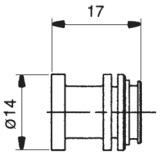

DIN rail mounting bracket [-D]
VVQC2000-57A
{For F/L/M/P/S (EX500) kit}
VVQC2000-57A-S
{For S (EX250) kit}
VVQC2000-57A-T (For T kit)

It is used for mounting a manifold on a DIN rail.
∗ When ordering this option incorporated with a manifold, suffix "-D" to the end of the manifold part number.

1 set of DIN rail mounting bracket is used for 1 manifold (2 DIN rail mounting brackets).

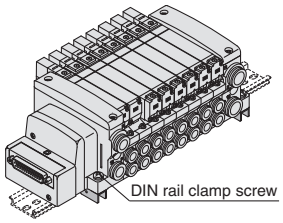

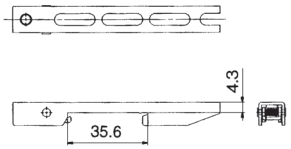

Direct EXH outlet with built-in silencer [-S]

This is a type with an exhaust outlet atop the manifold end plate. The built-in silencer exhibits an excellent noise suppression effect. (Noise reduction: 30 dB)
∗ When ordering this option incorporated with a manifold, suffix "-S" to the end of the manifold part number.

Note) A large quantity of drainage generated in the air source results in exhaust of air together with drainage.

● Refer to page 58 for maintenance.

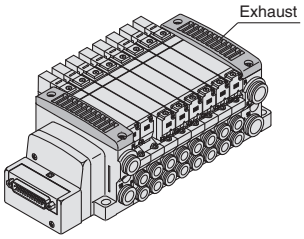

Silencer (For EXH port)

This silencer is to be inserted into the EXH port (One-touch fittings).

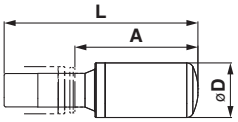

Dimensions

Series	Applicable fitting size ø**d**	Model	A	L	D	Effective area (mm^2) (Cv factor)	Noise reduction (dB)
VQC2000	10	AN20-C10	36.5	57.5	16.5	30	30

Elbow fitting assembly
VVQ2000-F-L(C4/C6/C8/N3/N7/N9)

It is used for piping that extends upward or downward from the manifold.
When installing it only in some manifold stations, specify the elbow fitting assembly part number and the mounting position by means of the manifold specification sheet.

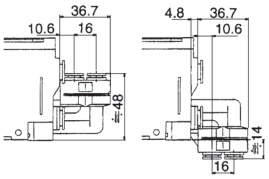

Dual flow fitting assembly
VVQ2000-52A-$^{C10}_{N11}$

This is a fitting to multiply the flow rate by combining the outputs of 2-valve stations. It is used for driving a large bore cylinder. This is a One-touch fitting for a port size of ø10 or ø3/8".

∗ The port size of the manifold part number is "MM".
Clearly indicate the dual flow fitting assembly part number and specify the mounting position by means of the manifold specifications.

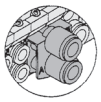

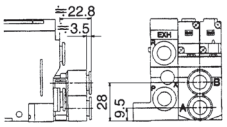

Double check block (Separated) for VQC2000
VQ2000-FPG-□□-□

It is mounted on the outlet side piping to keep the cylinder in the intermediate position for long periods of time. Combining with a 3-position exhaust centre solenoid valve will enable the cylinder to stop in the middle or maintain its position for a long time. Combining with a 2-position single/double solenoid valve will prevent a cylinder from dropping at the stroke end when the residual pressure of SUP is released.

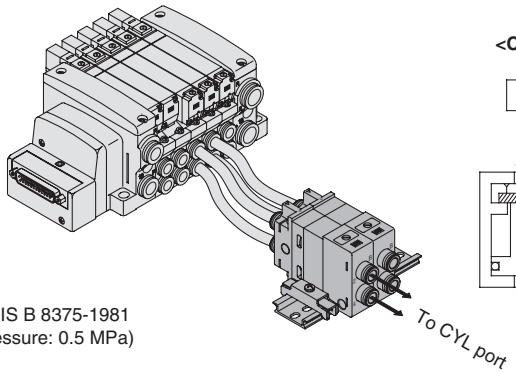

<Circuit diagram>

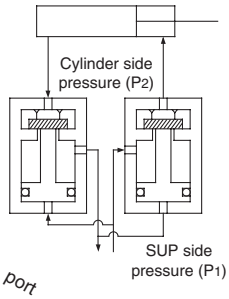

Specifications

Max. operating pressure	0.8 MPa
Min. operating pressure	0.15 MPa
Ambient and fluid temp.	–5 to 50°C
Flow characteristics: C	3.0 dm³/(s·bar)
Max. operating frequency	180 c.p.m

Note) Based on JIS B 8375-1981 (Supply pressure: 0.5 MPa)

Dimensions

Single unit

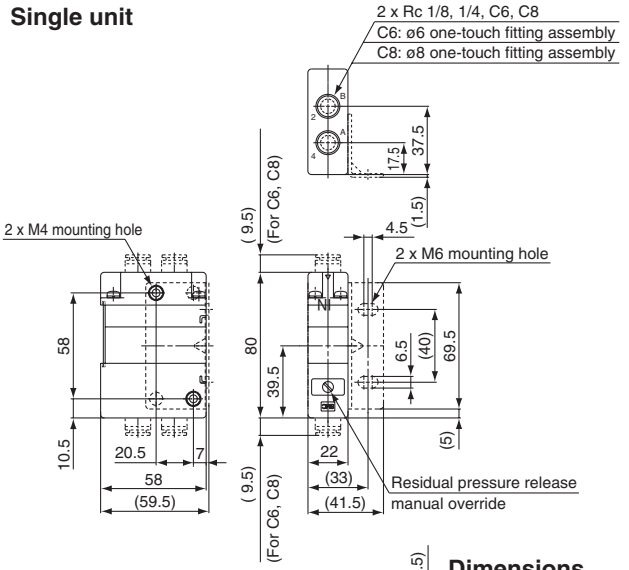

Manifold

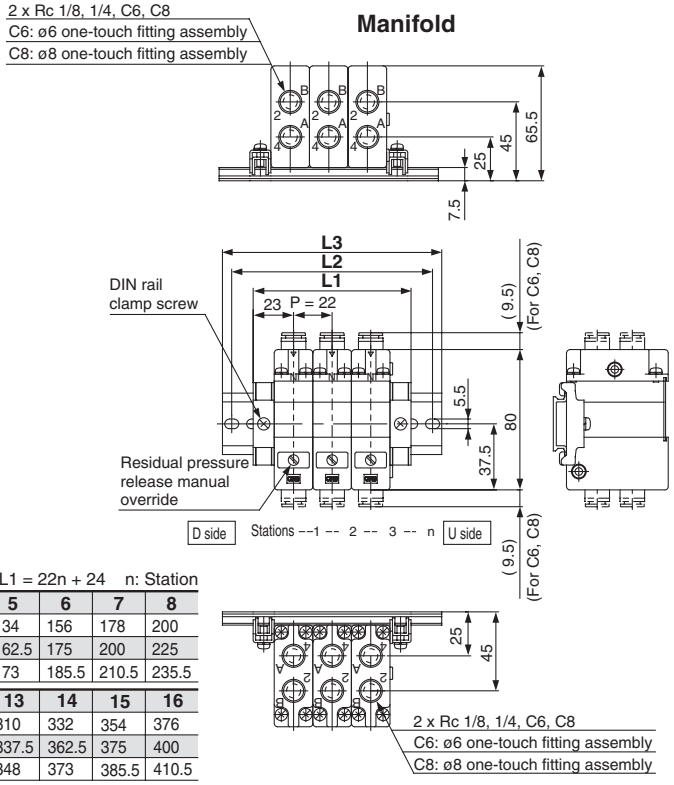

Dimensions

Formula L1 = 22n + 24 n: Station

L \ n	1	2	3	4	5	6	7	8
L1	46	68	90	112	134	156	178	200
L2	75	87.5	112.5	137.5	162.5	175	200	225
L3	85.5	98	123	148	173	185.5	210.5	235.5

L \ n	9	10	11	12	13	14	15	16
L1	222	244	266	288	310	332	354	376
L2	250	262.5	287.5	312.5	337.5	362.5	375	400
L3	260.5	273	298	323	348	373	385.5	410.5

How to Order

Double check block

VQ2000-FPG-01 01 - F

IN side port size

01	Rc 1/8
02	Rc 1/4
C6	ø6 one-touch fitting
C8	ø8 one-touch fitting
N7	ø1/4" one-touch fitting
N9	ø5/16" one-touch fitting

OUT side port size

01	Rc 1/8
02	Rc 1/4
C6	ø6 one-touch fitting
C8	ø8 one-touch fitting
N7	ø1/4" one-touch fitting
N9	ø5/16" one-touch fitting

Option

—	None
D	DIN rail mounting (For manifold)
F	With bracket
N	Name plate

Note) When two or more symbols are specified, indicate them alphabetically.
Example) -DN

<Example>

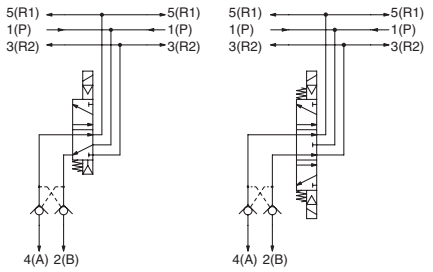

Manifold (DIN rail mounting)

VVQ2000-FPG-06

Stations

01	1 station
⋮	⋮
16	16 stations

When ordering a double check block, order the DIN rail mounting [-D].

<Ordering example>
VVQ2000-FPG-06···6-station manifold

∗VQ2000-FPG-C6C6-D, 3set
∗VQ2000-FPG-C8C8-D, 3set
} **Double check block**

Bracket Assembly

Part no.	Tightening torque
VQ2000-FPG-FB	0.8 to 1.0 N·m

⚠ Caution

- Air leakage from the pipe between the valve and cylinder or from the fittings will prevent the cylinder from stopping for long periods of time. Check the leakage using neutral household detergent, such as dish washing soap. Also, check the cylinder's tube gasket, piston packing and rod packing for air leakage.
- Since one-touch fittings allow slight air leakage, screw piping is recommended when stopping the cylinder in the middle for long periods of time.
- Combining double check block with 3-position closed centre or pressure centre solenoid valve will not work.
- When fittings, etc. are being screwed to the double check block, tighten them with the torque below.

Connection thread	Proper tightening torque (N·m)
Rc 1/8	7 to 9
Rc 1/4	12 to 14

- If the exhaust of the double check block is restricted too much, the cylinder may not operate properly and may not stop intermediately.
- Set the cylinder load so that the cylinder pressure will be within two times that of the supply pressure.

Specific Product Precautions 1

Be sure to read before handling.
Refer to back cover for Safety Instructions and Handling Precautions for SMC Products (M-E03-3) for 3/4/5 Port Solenoid Valves Precautions.

Manual Override

⚠ Warning

Connected actuator is started by manual operation. Use the manual override after confirming that there is no danger. Push type is standard. (Tool required) Locking type is semi-standard. (Tool required)

Non-locking push type (Tool required)

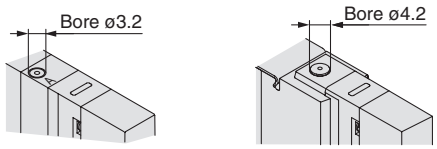

VQC1000 **VQC2000**

Push down on the manual override with a small screwdriver until it stops. Release the screwdriver and the manual override will return.

Locking type (Tool required) <Semi-standard>

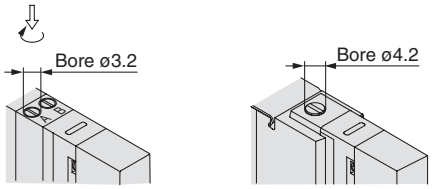

VQC1000 **VQC2000**

Push down on the manual override with a small flat head screwdriver until it stops. Turn it clockwise by 90 to lock it. Turn it counterclockwise to release it.

Locking type (Manual) <Semi-standard>

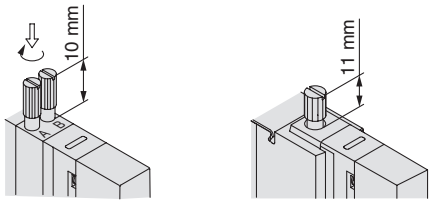

VQC1000 **VQC2000**

Push down on the manual override with a small screwdriver or with your fingers until it stops. Turn it clockwise by 90 to lock it. Turn it counterclockwise to release it.

⚠ Caution

Do not apply excessive torque when turning the locking type manual override. (0.1 N·m or less)

⚠ Warning

Slide locking type (Manual) <Semi-standard>

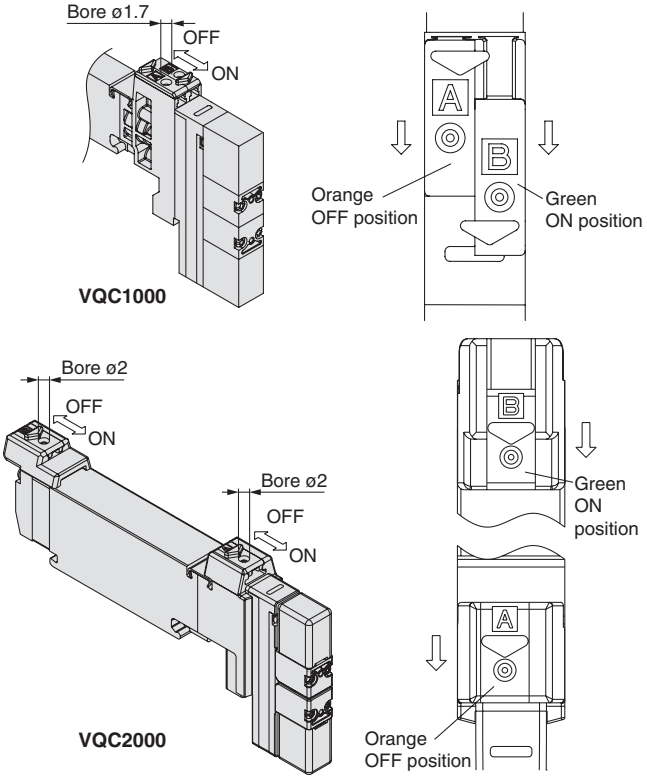

The manual override is locked by sliding it all the way to the pilot valve side (ON side) with a small flat head screwdriver or with your fingers. Slide it to the fitting side (OFF side) to release it. In addition, it can also be used as a push type by using a screwdriver, etc., of ø1.7 or less. (ø2 or less for VQC2000)

How to Mount/Remove Solenoid Valves

⚠ Caution

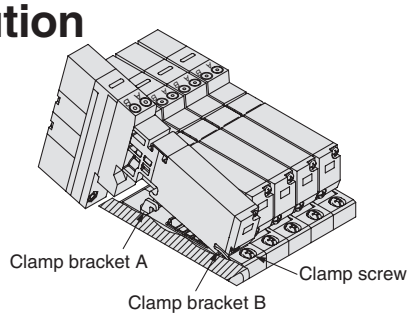

Removing

1. Loosen the clamp screw until it turns freely. (The screw is captive.)
2. Lift the coil side of the valve body while pressing down slightly on the screw head and remove it from the clamp bracket B. When the screw head cannot be pressed easily, gently press the area near the manual override of the valve.

Mounting

1. Press down on the clamp screw. Clamp bracket A opens. Diagonally insert the hook on the valve end plate side into clamp B.
2. Press the valve body downward. (When the screw is released, it will be locked by clamp bracket A.)
3. Tighten the clamp screw. (Proper tightening torque: VQC1000, 0.25 to 0.35 N·m; VQC2000, 0.5 to 0.7 N·m)

⚠ Caution

Dust on the sealing surface of the gasket or solenoid valve can cause air leakage.

Series VQC1000/2000
Specific Product Precautions 2

Be sure to read before handling.
Refer to back cover for Safety Instructions and Handling Precautions for SMC Products (M-E03-3) for 3/4/5 Port Solenoid Valves Precautions.

Cylinder Port Fittings Replacement

⚠ Caution

One-touch fittings on the cylinder port are a cassette for easy replacement. The fittings are blocked by a clip. After removing the corresponding valve and take out the clip with a flat head screwdriver, etc., then replace the fittings.
For mounting, insert the fitting until it strikes against the inside wall and then insert the clip to the specified position.

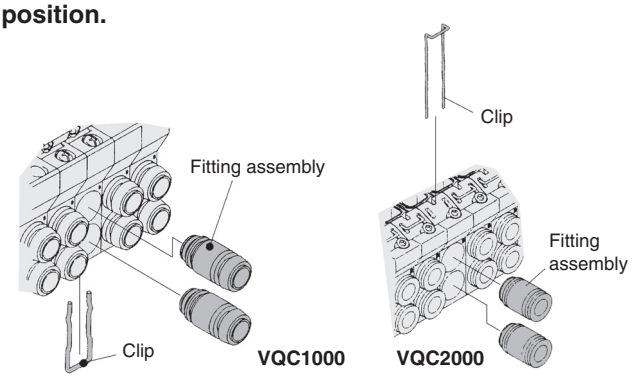

Applicable tubing O.D.	Fitting assembly part no.	
	VQC1000	**VQC2000**
Applicable tubing ø3.2	VVQ1000-50A-C3	——
Applicable tubing ø4	VVQ1000-50A-C4	VVQ1000-51A-C4
Applicable tubing ø6	VVQ1000-50A-C6	VVQ1000-51A-C6
Applicable tubing ø8	——	VVQ1000-51A-C8
M5	VVQ1000-50A-M5	——
Applicable tubing ø1/8"	VVQ1000-50A-N1	——
Applicable tubing ø5/32"	VVQ1000-50A-N3	VVQ1000-51A-N3
Applicable tubing ø1/4"	VVQ1000-50A-N7	VVQ1000-51A-N7
Applicable tubing ø5/16"	——	VVQ1000-51A-N9

Note) Refer to “Manifold Optional Parts” on pages 51 and 54 for other types of fittings.

⚠ Caution

1) Use caution that O-rings must be free from scratches and dust. Otherwise, air leakage may result.
2) After screwing in the fittings, mount the M5 fitting assembly on the manifold base. (Tightening torque: 0.8 to 1.2 N·m)
3) Purchasing order is available in units of 10 pieces.

Light/Surge Voltage Suppressor

⚠ Caution

The lighting positions are concentrated on one side for both single solenoid type and double solenoid type. In the double solenoid type, A side and B side energization are indicated by two colours which match the colours of the manual overrides.

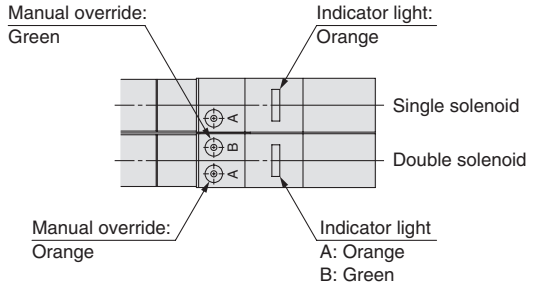

(Drawing shows a VQC1000 case.)

DC circuit diagram

Single solenoid

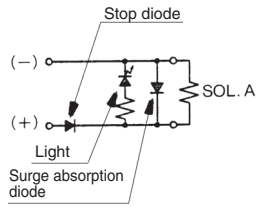

Double solenoid

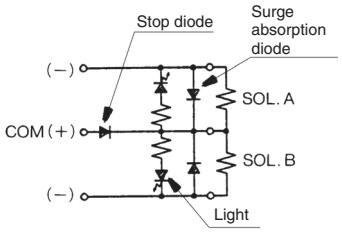

Note) A-side energization:
A light (Orange) illuminates. With wrong wiring prevention (stop diode) mechanism
B-side energization:
B light (Green) illuminates. With a surge absorption (surge absorption diode) mechanism

Specific Product Precautions 3

Be sure to read before handling.
Refer to back cover for Safety Instructions and Handling Precautions for SMC Products (M-E03-3) for 3/4/5 Port Solenoid Valves Precautions.

How to Mount/Remove DIN Rail

⚠ Caution

Removing

1. Loosen the clamp screw on side (a) of the end plate on both sides.
2. Lift side (a) of the manifold base and slide the end plate in the direction of (2) shown in the figure to remove.

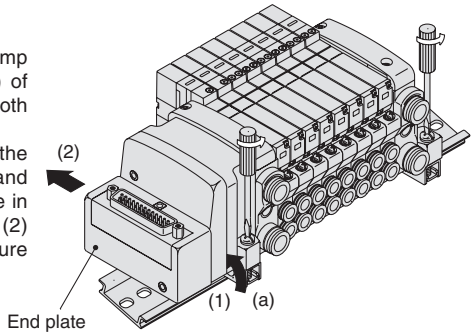

Mounting

1. Hook side (b) of the manifold base on the DIN rail.
2. Press down side (a) and mount the end plate on the DIN rail. Tighten the clamp screw on side (a) of the end plate. The proper tightening torque for screws is 0.4 to 0.6 N·m.

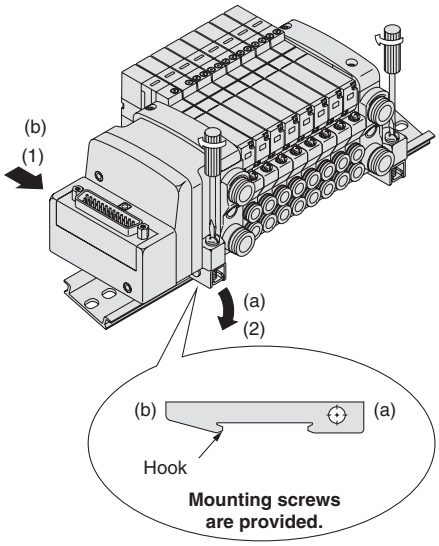

IP67 Enclosure

⚠ Caution

Wiring connection for models conforming to IP67 should also have enclosures equivalent to or of stricter than IP67.

Built-in Silencer Element

⚠ Caution

A filter element is incorporated in the end plate on both sides of the manifold base. A dirty and choked element may reduce cylinder speed or cause malfunction. Clean or replace the dirty element.

Element Part No.

Type	Element part no.	
	VQC1000	**VQC2000**
Direct EXH outlet with built-in silencer	VVQ1000-82A-1	VVQ2000-82A-1

The minimum order quantity is 10 pcs.

Remove the cover from the top of the end plate and remove the old element with a flat head screwdriver, etc.

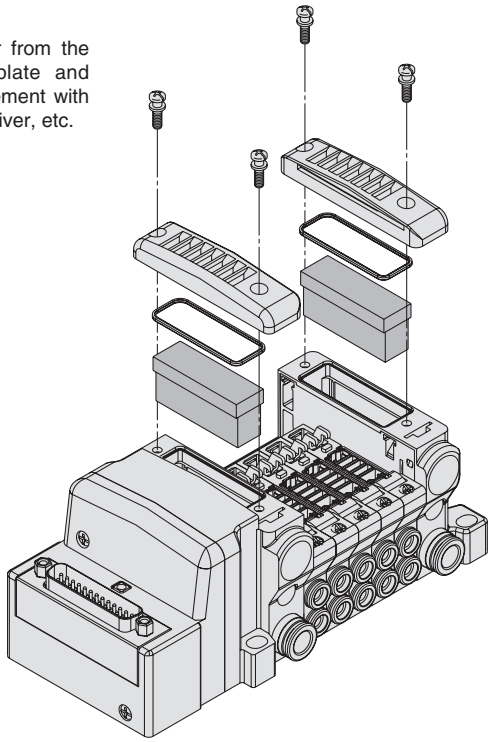

How to Calculate Flow Rate

Refer to Best Pneumatics No. ① for obtaining the flow rate.

Series VQC1000/2000
Specific Product Precautions 4

Be sure to read before handling.
Refer to back cover for Safety Instructions and Handling Precautions for SMC Products (M-E03-3) for 3/4/5 Port Solenoid Valves Precautions.

EX500/EX260/EX250/EX126 Precautions

⚠Warning

1. **These products are intended for use in general factory automation equipment.**
   Avoid using these products in machinery/equipment which affects human safety, and in cases where malfunction or failure can result in extensive damage.
2. **Do not use in explosive environments, in the presence of inflammable gases, or in corrosive environments. This can cause injury or fire.**
3. **Work such as transporting, installing, piping, wiring, operation, control and maintenance should be performed by knowledgeable and qualified personnel only. As handling involves the risk of a danger of electrocution, injury or fire.**
4. **Install an external emergency stop circuit that can promptly stop operation and shut off the power supply.**
5. **Do not modify these products. Modifications done to**

⚠Caution

1. **Read the instruction manual carefully, strictly observe the precautions and operate within the range of the specifications.**
2. **Do not drop these products or submit them to strong impacts. This can cause damage, failure or malfunction.**
3. **In locations with poor electrical conditions, take steps to ensure a steady flow of the rated power supply. Use of a voltage outside of the specifications can cause malfunction, damage to the unit, electrocution or fire.**
4. **Do not touch connector terminals or internal circuit elements when current is being supplied. There is a danger of malfunction, damage to the unit or electrocution if connector terminals or internal circuit elements are touched when current is being supplied.**
   Be sure that the power supply is OFF when adding or removing manifold valves or input blocks or when connecting or disconnecting connectors.
5. **Operate at an ambient temperature that is within the specifications. Even when the ambient temperature range is within the specifications, do not use in locations where there are rapid temperature changes.**
6. **Keep wire scraps and other extraneous materials from getting inside these products. This can cause fire, failure or malfunction.**
7. **Give consideration to the operating environment depending on the type of enclosure being used.**
   To achieve IP65 and IP67 protection class, provide appropriate wiring between all units using electrical wiring cables, communication connectors and cables with M12 connectors. Also, provide waterproof caps when there are unused ports, and perform proper mounting of input units, input blocks, SI units and manifold valves. Provide a cover or other protection for applications in which there is constant exposure to water.
8. **Use the proper tightening torques.**
   There is a possibility of damaging threads if tightening exceeds the tightening torque range.
9. **Provide adequate protection when operating in locations such as follows:**
   - Where noise is generated by static electricity
   - Where there is a strong electric field
   - Where there is a danger of exposure to radiation
   - When in close proximity to power supply lines

⚠Caution

10. **When these products are installed in equipment, provide adequate protection against noise by using noise filters.**
11. **Since these products are components whose end usage is obtained after installation in other equipment, the customer should confirm conformity to EMC directives for the finished product.**
12. **Do not remove the name plate.**
13. **Perform periodic inspections and confirm normal operation, otherwise it may be impossible to guarantee safety due to unexpected malfunction or erroneous operation.**

Safety Instructions on Power Supply

⚠Caution

1. **Operation is possible with a single power supply or a separate power supply. However, be sure to provide two wiring systems (one for solenoid valves, and one for input and control units).**
2. **When it is UL compliant, use a class 2 power supply unit in accordance with UL1310 for a combined direct current power supply.**

Safety Instructions on Cable

⚠Caution

1. **Avoid miswiring, as this can cause malfunction, damage and fire in the unit.**
2. **To prevent noise and surge in signal lines, keep all wiring separate from power lines and high-voltage lines. Otherwise, this can cause malfunction.**
3. **Check wiring insulation, as defective insulation can cause damage to the unit when excessive voltage or current is applied.**
4. **Do not bend or pull cables repeatedly, and do not place heavy objects on them or allow them to be pinched. This can cause broken lines.**

Specific Product Precautions 5

Be sure to read before handling.
Refer to back cover for Safety Instructions and Handling Precautions for SMC Products (M-E03-3) for 3/4/5 Port Solenoid Valves Precautions.

EX600 Precautions

Design/Selection

⚠ Warning

1. **Use this product within the specification range.**
   Using beyond the specified specifications range can cause fire, malfunction, or damage to the system.
   Confirm the specifications when operating.
2. **When using for an interlock circuit:**
   - **Provide a multiple interlock system which is operated by another system (such as mechanical protection function).**
   - **Perform an inspection to check that it is working properly.**

   This may cause possible injury due to malfunction.

⚠ Caution

1. **When it is UL compliant, use a class 2 power supply unit in accordance with UL1310 for a combined direct current power supply.**
2. **Use this product within the specified voltage range.**
   Using beyond the specified voltage range is likely to cause the units and connecting devices to be damaged or to malfunction.
3. **The power supply for the unit should be 0 V as the standard for both power supply for output as well as power supply for control/input.**

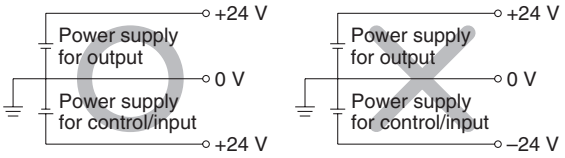

4. **Do not install a unit in a place where it can be used as a foothold.**
   Applying any excessive load such as stepping on the unit by mistake or placing a foot on it, will cause it to break.
5. **Keep the surrounding space free for maintenance.**
   When designing a system, take into consideration the amount of free space needed for performing maintenance.
6. **Do not remove the name plate.**
   Improper maintenance or incorrect use of instruction manual can cause failure and malfunction. Also, there is a risk of losing conformity with safety standards.
7. **Beware of inrush current when the power supply is turned on.**
   Some connected loads can apply an initial charge current which will trigger the over current protection function, causing the unit to malfunction.

Mounting

⚠ Caution

1. **When handling and assembling units:**
   - **Do not touch the sharp metal parts of the connector or plug.**
   - **Do not apply excessive force to the unit.**
     The connecting portions of the unit are firmly joined with seals.
   - **When joining units, take care not to get fingers caught between units.**
     Injury can result.
2. **Do not drop, bump, or apply excessive impact.**
   Otherwise, the unit can become damaged, malfunction, or fail to function.
3. **Observe the tightening torque range.**
   Tightening outside of the allowable torque range will likely damage the product.
   IP67 protection class cannot be guaranteed if the screws are not tightened to the specified torque.
4. **When lifting a large size manifold solenoid valve unit, take care to avoid causing stress to the valve connection joint.**
   The connection parts of the unit may be damaged.
   Because the unit may be heavy, carrying and installation should be performed by more than one operator to avoid strain or injury.
5. **When placing a manifold, mount it on a flat surface.**
   Torsion in the whole manifold can lead to trouble such as air leakage or defective insulation.

Wiring

⚠ Caution

1. **Confirm grounding to maintain the safety of the reduced wiring system and for anti-noise performance.**
   Provide a specific grounding as close to the unit as possible to minimise the distance to grounding.
2. **Avoid repeatedly bending or stretching the cable and applying a heavy object or force to it.**
   Wiring applying repeated bending and tensile stress to the cable can break the circuit.
3. **Avoid miswiring.**
   If miswired, there is a danger of malfunction or damage to the reduced wiring system.
4. **Do not wire while energizing the product.**
   There is a danger of malfunction or damage to the reduced wiring system or input/output equipment.

Specific Product Precautions 6

Be sure to read before handling.
Refer to back cover for Safety Instructions and Handling Precautions for SMC Products (M-E03-3) for 3/4/5 Port Solenoid Valves Precautions.

EX600 Precautions

Wiring

⚠ Caution

5. Avoid wiring the power line and high-pressure line in parallel.
Noise or surge produced by signal line resulting from the power line or high pressure line could cause malfunction.
Wiring of the reduced wiring system or input/output device and the power line or high-pressure line should be separated from each other.

6. Confirm the wiring insulation.
Defective insulation (contact with other circuits, improper insulation between terminals, etc.) may cause damage to the reduced wiring system or input/output device due to excessive voltage or current.

7. When a reduced wiring system is installed in machinery/equipment, provide adequate protection against noise by using noise filters, etc.
Noise in signal lines may cause malfunction.

8. When connecting wires of input/output device or handheld terminal, prevent water, solvent or oil from entering inside from the connecter section.
This can cause damage, equipment failure, or malfunction.

9. Avoid wiring patterns in which excessive stress is applied to the connector.
This may cause malfunction or damage to the unit due to contact failure.

Operating Environment

⚠ Warning

1. Do not use in an atmosphere containing an inflammable gas or explosive gas.
Use in such an atmosphere is likely to cause a fire or explosion. This system is not explosion-proof.

⚠ Caution

1. Select the proper type of enclosure according to the environment of operation.
IP65/67 protection class is achieved when the following conditions are met.
1) The units are connected properly with wiring cable for power supply, communication connector, and cable with M12 connector.
2) Suitable mounting of each unit and manifold valve.
3) Be sure to mount a seal cap on any unused connectors.

For IP40 protection class, do not use in atmospheres with corrosive gas, chemicals, sea water, water, steam, or where there is direct contact with any of these.
When EX600-D□□E or EX600-D□□F are connected, the enclosure of the manifold should be IP40.
Also, the Handheld Terminal confirms to IP20, so prevent foreign matter from entering inside, and water, solvent or oil from coming in direct contact with it.

Operating Environment

⚠ Caution

2. Provide adequate protection when operating in locations such as the following.
Failure to do so may cause damage or malfunction.
The effect of countermeasures should be checked in individual equipment and machine.
1) Where noise is generated by static electricity, etc.
2) Where there is a strong electric field
3) Where there is a danger of exposure to radiation
4) When in close proximity to power supply lines

3. Do not use in an environment where oil and chemicals are used.
Operating in environments with coolants, cleaning solvents, various oils or chemicals may cause adverse effects (damage, malfunction) to the unit even in a short period of time.

4. Do not use in an environment where the product could be exposed to corrosive gas or liquid.
This may damage the unit and cause it to malfunction.

5. Do not use in locations with sources of surge generation.
Installation of the unit in an area around the equipment (electromagnetic lifters, high frequency induction furnaces, welding machine, motors etc.), which generates the large surge voltage could cause to deteriorate an internal circuitry element of the unit or result in damage. Implement countermeasures against the surge from the generating source, and avoid touching the lines with each other.

6. Use the product type that has an integrated surge absorption element when directly driving a load which generates surge voltage by relay, solenoid valves or lamp.
When a surge generating load is directly driven, the unit may be damaged.

7. The product is CE marked, but not immune to lightning strikes. Take measures against lightning strikes in your system.

8. Keep dust, wire scraps and other extraneous material from getting inside the product.
This may cause malfunction or damage.

9. Mount the unit in such locations, where no vibration or shock is affected.
This may cause malfunction or damage.

10. Do not use in places where there are cyclic temperature changes.
In case that the cyclic temperature is beyond normal temperature changes, the internal unit is likely to be adversely effected.

11. Do not use in direct sunlight.
Do not use in direct sunlight. It may cause malfunction or damage.

12. Use this product within the specified ambient temperature range.
This may cause malfunction.

13. Do not use in places where there is radiated heat around it.
Such a place is likely to cause malfunction.

Specific Product Precautions 7

Be sure to read before handling.
Refer to back cover for Safety Instructions and Handling Precautions for SMC Products (M-E03-3) for 3/4/5 Port Solenoid Valves Precautions.

EX600 Precautions

Adjustment/Operation

⚠ Warning

1. **Do not perform operation or setting with wet hands.**
   There is a risk of electrical shock.

<Ex600 Handheld Terminal>

2. **Do not apply pressure to the LCD display.**
   There is a possibility of the crack of LCD display and injuring.
3. **The forced input/output function is used to change the signal status forcibly. When operating this function, be sure to check the safety of the surroundings and installation.**
   Otherwise, injury or equipment damage could result.
4. **Incorrect setting of parameters can cause malfunction. Be sure to check the settings before use.**
   This may cause injury or equipment damage.

⚠ Caution

1. **Use a watchmaker's screwdriver with thin blade for the setting of each switch of the SI unit.**
   When setting the switch, do not touch other unrelated parts.
   This may cause parts damage or malfunction due to a short circuit.
2. **Provide adequate setting for the operating conditions.**
   Failure to do so could result in malfunction.
   Refer to the instruction manual for setting of the switches.
3. **For the details of programming and address setting, refer to the manual from the PLC manufacturer.**
   The content of programming related to protocol is designed by the manufacturer of the PLC used.

<Ex600 Handheld Terminal>

4. **Do not press the setting buttons with a sharp pointed object.**
   This may cause damage or malfunction.
5. **Do not apply excessive load and impact to the setting buttons.**
   This may cause damage, equipment failure or malfunction.

When the order does not include the SI unit, the valve plate to connect the manifold and SI unit is not mounted. Use attached valve fixing screws and mount the valve plate.
(Tightening torque: 0.6 to 0.7 N·m)

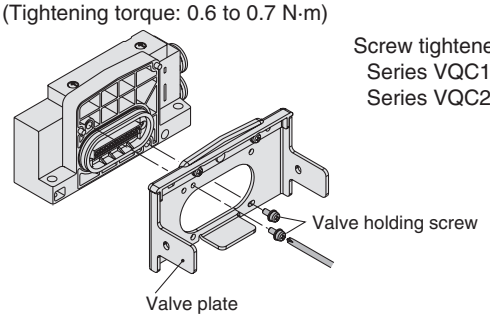

Maintenance

⚠ Warning

1. **Do not disassemble, modify (including circuit board replacement) or repair this product.**
   Such actions are likely to cause injuries or breakage.
2. **When an inspection is performed,**
   - **Turn off the power supply.**
   - **Stop the air supply, exhaust the residual pressure in piping and verify that the air is released before performing maintenance work.**
     Unexpected malfunction of system components and injury can result.

⚠ Caution

1. **When handling and replacing the unit:**
   - **Do not touch the sharp metal parts of the connector or plug.**
   - **Do not apply excessive force to the unit.**
     The connecting portions of the unit are firmly joined with seals.
   - **When joining units, take care not to get fingers caught between units.**
     Injury can result.
2. **Perform periodic inspection.**
   Unexpected malfunction in the system composition devices is likely to occur due to malfunction of machinery or equipment.
3. **After maintenance, make sure to perform an appropriate functionality inspection.**
   In cases of abnormality such as faulty operation, stop operation. Unexpected malfunction in the system composition devices is likely to occur.
4. **Do not use benzene and thinner for cleaning units.**
   Damage to the surface or erasure of the display can result. Wipe off any stains with a soft cloth.
   If the stain is persistent, wipe off with a cloth soaked in a dilute solution of neutral detergent and wrung out tightly, and then finish with a dry cloth.

\■ **Trademark**
DeviceNet™ is a trademark of ODVA.
Product names described in this catalogue may be used as trademarks by each manufacturer.

⚠ Safety Instructions

These safety instructions are intended to prevent hazardous situations and/or equipment damage. These instructions indicate the level of potential hazard with the labels of **"Caution," "Warning"** or **"Danger."** They are all important notes for safety and must be followed in addition to International Standards (ISO/IEC)*1), and other safety regulations.

⚠ Caution: **Caution** indicates a hazard with a low level of risk which, if not avoided, could result in minor or moderate injury.

⚠ Warning: **Warning** indicates a hazard with a medium level of risk which, if not avoided, could result in death or serious injury.

⚠ Danger : **Danger** indicates a hazard with a high level of risk which, if not avoided, will result in death or serious injury.

*1) ISO 4414: Pneumatic fluid power – General rules relating to systems.
ISO 4413: Hydraulic fluid power – General rules relating to systems.
IEC 60204-1: Safety of machinery – Electrical equipment of machines. (Part 1: General requirements)
ISO 10218-1: Manipulating industrial robots - Safety.
etc.

⚠ Warning

1. **The compatibility of the product is the responsibility of the person who designs the equipment or decides its specifications.**
   Since the product specified here is used under various operating conditions, its compatibility with specific equipment must be decided by the person who designs the equipment or decides its specifications based on necessary analysis and test results. The expected performance and safety assurance of the equipment will be the responsibility of the person who has determined its compatibility with the product. This person should also continuously review all specifications of the product referring to its latest catalogue information, with a view to giving due consideration to any possibility of equipment failure when configuring the equipment.
2. **Only personnel with appropriate training should operate machinery and equipment.**
   The product specified here may become unsafe if handled incorrectly. The assembly, operation and maintenance of machines or equipment including our products must be performed by an operator who is appropriately trained and experienced.
3. **Do not service or attempt to remove product and machinery/equipment until safety is confirmed.**
   1. The inspection and maintenance of machinery/equipment should only be performed after measures to prevent falling or runaway of the driven objects have been confirmed.
   2. When the product is to be removed, confirm that the safety measures as mentioned above are implemented and the power from any appropriate source is cut, and read and understand the specific product precautions of all relevant products carefully.
   3. Before machinery/equipment is restarted, take measures to prevent unexpected operation and malfunction.
4. **Contact SMC beforehand and take special consideration of safety measures if the product is to be used in any of the following conditions.**
   1. Conditions and environments outside of the given specifications, or use outdoors or in a place exposed to direct sunlight.
   2. Installation on equipment in conjunction with atomic energy, railways, air navigation, space, shipping, vehicles, military, medical treatment, combustion and recreation, or equipment in contact with food and beverages, emergency stop circuits, clutch and brake circuits in press applications, safety equipment or other applications unsuitable for the standard specifications described in the product catalogue.
   3. An application which could have negative effects on people, property, or animals requiring special safety analysis.
   4. Use in an interlock circuit, which requires the provision of double interlock for possible failure by using a mechanical protective function, and periodical checks to confirm proper operation.

Limited warranty and Disclaimer/ Compliance Requirements

The product used is subject to the following "Limited warranty and Disclaimer" and "Compliance Requirements".
Read and accept them before using the product.

Limited warranty and Disclaimer

1. The warranty period of the product is 1 year in service or 1.5 years after the product is delivered, wichever is first.*2) Also, the product may have specified durability, running distance or replacement parts. Please consult your nearest sales branch.
2. For any failure or damage reported within the warranty period which is clearly our responsibility, a replacement product or necessary parts will be provided. This limited warranty applies only to our product independently, and not to any other damage incurred due to the failure of the product.
3. Prior to using SMC products, please read and understand the warranty terms and disclaimers noted in the specified catalogue for the particular products.

*2) **Vacuum pads are excluded from this 1 year warranty.**
A vacuum pad is a consumable part, so it is warranted for a year after it is delivered. Also, even within the warranty period, the wear of a product due to the use of the vacuum pad or failure due to the deterioration of rubber material are not covered by the limited warranty.

Compliance Requirements

1. The use of SMC products with production equipment for the manufacture of weapons of mass destruction (WMD) or any other weapon is strictly prohibited.
2. The exports of SMC products or technology from one country to another are governed by the relevant security laws and regulations of the countries involved in the transaction. Prior to the shipment of a SMC product to another country, assure that all local rules governing that export are known and followed.

⚠ Caution

1. **The product is provided for use in manufacturing industries.**
   The product herein described is basically provided for peaceful use in manufacturing industries.
   If considering using the product in other industries, consult SMC beforehand and exchange specifications or a contract if necessary.
   If anything is unclear, contact your nearest sales branch.

⚠ Caution

SMC products are not intended for use as instruments for legal metrology.
Measurement instruments that SMC manufactures or sells have not been qualified by type approval tests relevant to the metrology (measurement) laws of each country. Therefore, SMC products cannot be used for business or certification ordained by the metrology (measurement) laws of each country.

⚠ Safety Instructions Be sure to read "Handling Precautions for SMC Products" (M-E03-3) before using.

SMC Corporation (Europe)

Austria	☎+43 (0)2262622800	www.smc.at	office@smc.at
Belgium	☎+32 (0)33551464	www.smc.be	info@smc.be
Bulgaria	☎+359 (0)2807670	www.smc.bg	office@smc.bg
Croatia	☎+385 (0)13707288	www.smc.hr	office@smc.hr
Czech Republic	☎+420 541424611	www.smc.cz	office@smc.cz
Denmark	☎+45 70252900	www.smcdk.com	smc@smcdk.com
Estonia	☎+372 6510370	www.smcpneumatics.ee	smc@smcpneumatics.ee
Finland	☎+358 207513513	www.smc.fi	smcfi@smc.fi
France	☎+33 (0)164761000	www.smc-france.fr	info@smc-france.fr
Germany	☎+49 (0)61034020	www.smc.de	info@smc.de
Greece	☎+30 210 2717265	www.smchellas.gr	sales@smchellas.gr
Hungary	☎+36 23513000	www.smc.hu	office@smc.hu
Ireland	☎+353 (0)14039000	www.smcpneumatics.ie	sales@smcpneumatics.ie
Italy	☎+39 0292711	www.smcitalia.it	mailbox@smcitalia.it
Latvia	☎+371 67817700	www.smc.lv	info@smc.lv
Lithuania	☎+370 5 2308118	www.smclt.lt	info@smclt.lt
Netherlands	☎+31 (0)205318888	www.smc.nl	info@smc.nl
Norway	☎+47 67129020	www.smc-norge.no	post@smc-norge.no
Poland	☎+48 222119600	www.smc.pl	office@smc.pl
Portugal	☎+351 226166570	www.smc.eu	postpt@smc.smces.es
Romania	☎+40 213205111	www.smcromania.ro	smcromania@smcromania.ro
Russia	☎+7 8127185445	www.smc-pneumatik.ru	info@smc-pneumatik.ru
Slovakia	☎+421 (0)413213212	www.smc.sk	office@smc.sk
Slovenia	☎+386 (0)73885412	www.smc.si	office@smc.si
Spain	☎+34 945184100	www.smc.eu	post@smc.smces.es
Sweden	☎+46 (0)86031200	www.smc.nu	post@smc.nu
Switzerland	☎+41 (0)523963131	www.smc.ch	info@smc.ch
Turkey	☎+90 212 489 0 440	www.smcpnomatik.com.tr	info@smcpnomatik.com.tr
UK	☎+44 (0)845 121 5122	www.smc.uk	sales@smc.uk

SMC CORPORATION Akihabara UDX 15F, 4-14-1, Sotokanda, Chiyoda-ku, Tokyo 101-0021, JAPAN Phone: 03-5207-8249 FAX: 03-5298-5362

1st printing XO printing XO 00 Printed in Spain

Specifications are subject to change without prior notice and any obligation on the part of the manufacturer.

5 Port Solenoid Valve

Metal Seal | Rubber Seal

CE RoHS

■Compact and large flow capacity

VQC4000 Possible to drive cylinders up to **Ø 160**

VQC5000 Possible to drive cylinders up to **Ø 180**

* When the average speed is 200 mm/s. Refer to page 5 for actual conditions.

VQC4000: 25 mm pitch

Q [l/min (ANR)]: 1958*

VQC5000: 41 mm pitch

Q [l/min (ANR)]: 4350*

* 2-position single, rubber seal: 4/2 → 5/3 (A/B → R1/R2)

■Extensive range of protocols available

PROFINET EtherCAT CANopen EtherNet/IP PROFIBUS AS-i DeviceNet CC-Link ETHERNET POWERLINK

* EtherNet/IP™ and PROFINET are compatible with wireless systems

■Connector type manifold

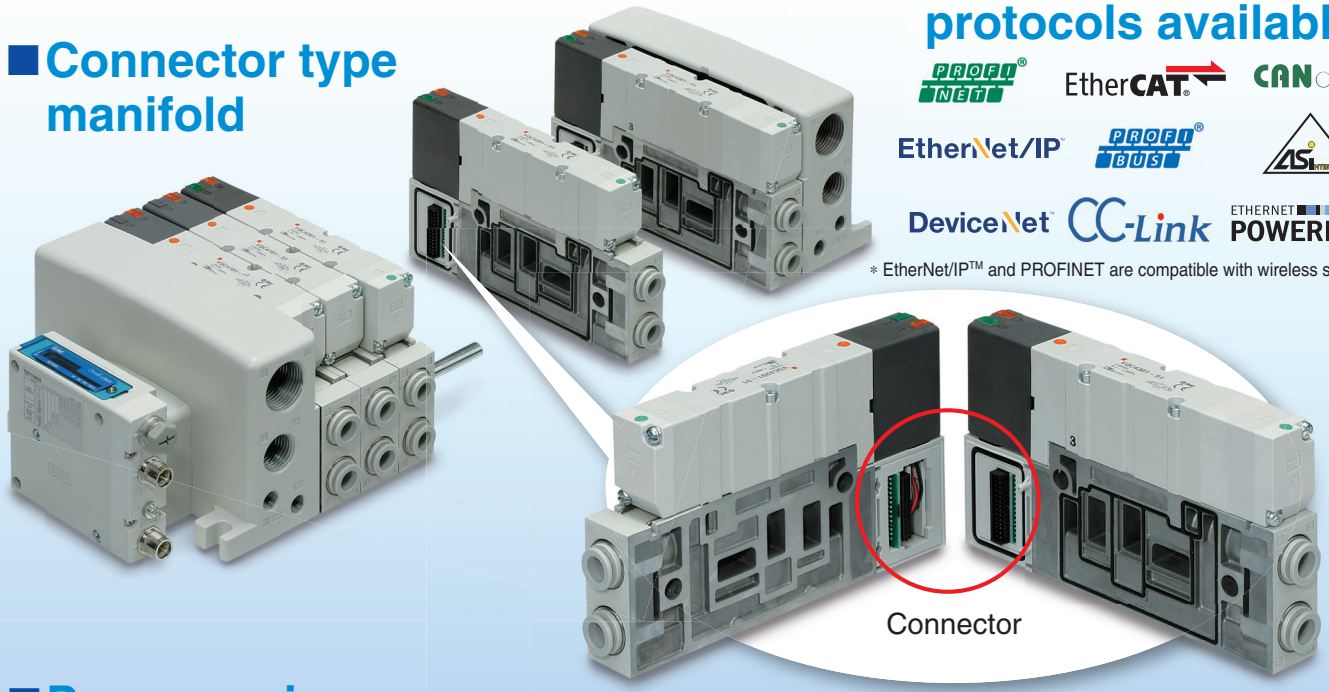

■Power saving

	Power consumption [W]	Maximum operating pressure [MPa]
Current product	0.5 (1.0)	0.7
New VQC	0.4 (0.95)	1.0

* Low wattage type ( ): Standard

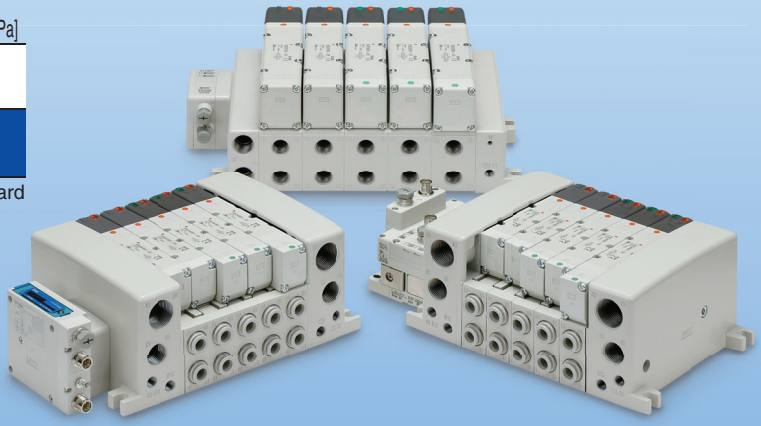

■Long service life 100 million cycles

* According to SMC life test conditions

■Enclosure IP67 compliant

* Except F and P kits

Series VQC4000/5000

SMC

CAT.EUS11-108Aa-UK

■ Compact and large flow

Model (Series)	Valve pitch [mm]	Flow-rate characteristics Note 1)							
		Metal seal				Rubber seal			
		C [dm³/(s·bar)]	b	Cv	Q [l/min (ANR)] Note 2)	C [dm³/(s·bar)]	b	Cv	Q [l/min (ANR)] Note 2)
VQC4000	25	6.9	0.17	1.7	1625	7.3	0.38	2.0	1958
VQC5000	41	14	0.18	3.4	3316	17	0.31	4.7	4350

Note 1) Flow-rate characteristics: 2-position single, 4/2 → 5/3 (A/B → R1/R2)
Note 2) These values have been calculated according to ISO 6358 and indicate the flow rate under standard conditions with an inlet pressure of 0.6 MPa (relative pressure) and a pressure drop of 0.1 MPa.

■ Applicable to EX600 (Input/Output) serial transmission system (Fieldbus system)

Compatible Protocols

CC-Link V2 DeviceNet PROFIBUS EtherNet/IP EtherCAT PROFINET

Reduction in wiring time with SPEEDCON (Phoenix Contact). Just insert and make 1/2 rotation!

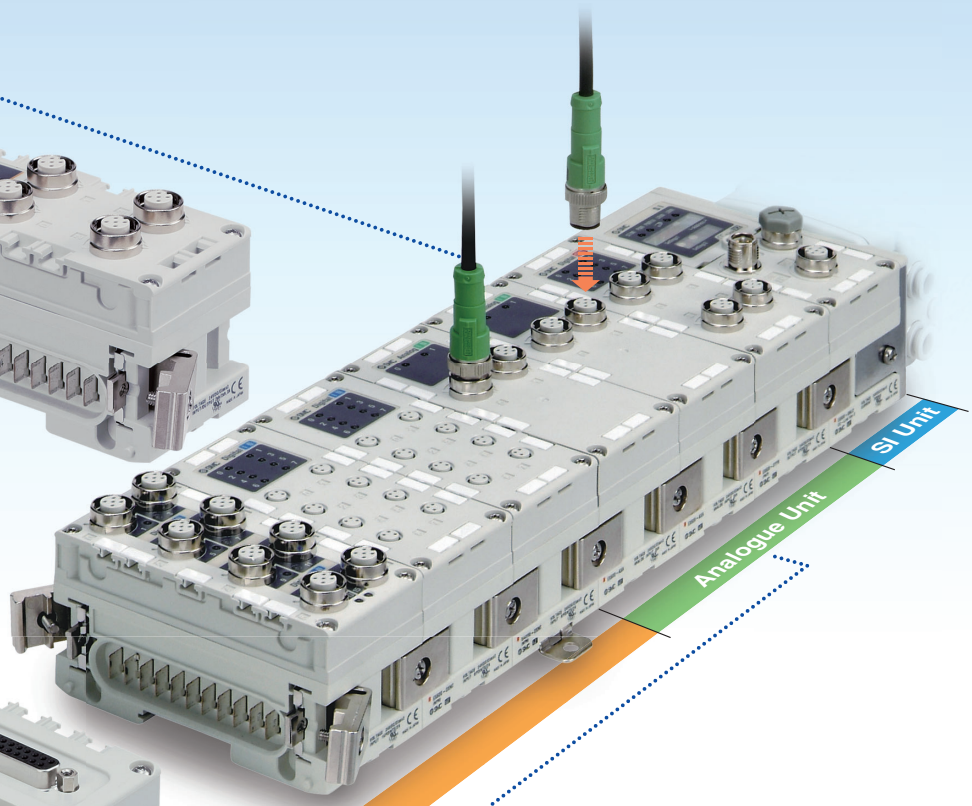

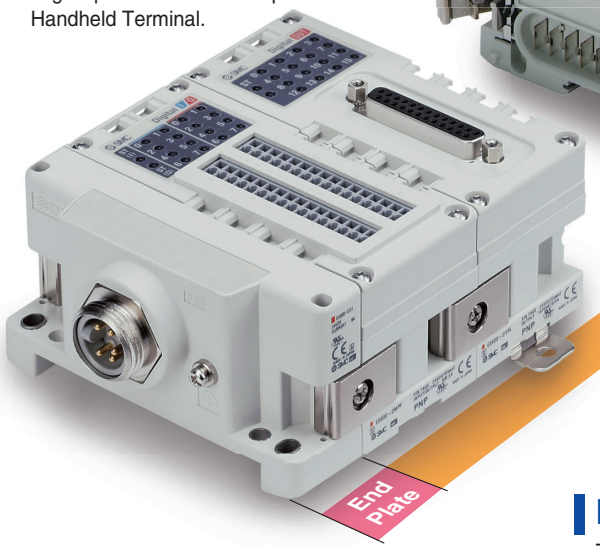

Self diagnosis function

It is possible to ascertain the maintenance period and identify the parts that require maintenance, by an input/output open circuit detection function and an input/output signal ON/OFF counter function. Also, the monitoring of input and output signals and the setting of parameters can be performed with a Handheld Terminal.

Analogue Unit can be connected with analogue input device or analogue output device.

As well as a Digital (switch) Input/Output Unit, a Unit applicable to analogue signal is provided, and can be connected with various device for control.

Max. 9 Units Note) can be connected in any order.

The Input Unit to connect input device such as an auto switch, pressure switch and flow switch, and the Output Unit to connect output device such as a solenoid valve, relay and indicator light can be connected in any order.

Note) Except SI Unit

■ EX260 (Output device for driving 5 port solenoid valves)

Compatible Protocols

PROFIBUS® · DeviceNet™ · ETHERNET POWERLINK · PROFINET® · EtherNet/IP™ · CC-Link · EtherCAT®

Number of outputs	Each 32/16 digital output type available in the series
Output polarity	Each negative common (PNP)/positive common (NPN) type available in the series
Enclosure	IP67 (For Units with D-sub connector, and when connected with S0700 manifolds, it is IP40.)
Internal terminating resistor	ON/OFF switching is possible with an internal terminating resistor for communication. (Only for Units compatible with M12 PROFIBUS DP, CC-Link communication connectors)

■ A wide variety of prepackaged wiring configurations

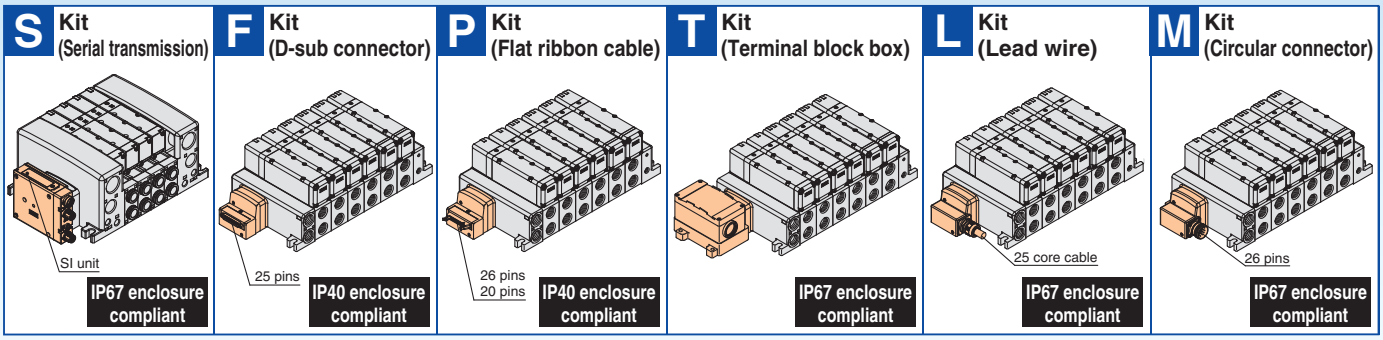

- The six standard wiring packages bring a world of ease to wiring and maintenance work, while the protective enclosures of four of them conform to IP67 standards.
- The S kit is compatible with a combined I/O Unit. (Not applicable to Gateway Unit)

■ Connector type manifold

- The use of multi-pin connectors to replace wiring inside manifold blocks provides flexibility when adding stations or changing manifold configuration.
- All kits use multi-pin connectors, so switching from the F kit (D-sub connector) to the S kit (serial transmission) can be done simply by changing the kit section.

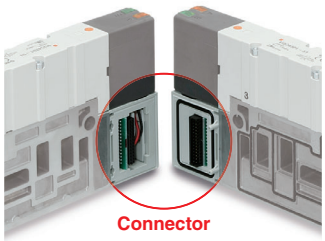

(Refer to the connector wiring diagram.) Printed circuit board patterns between connectors are shifted at every station. This allows for viable connections to take place without necessarily specifying whether the manifold station is double, single, or mixed wiring.

Connector Wiring Diagram (Mixed wiring)

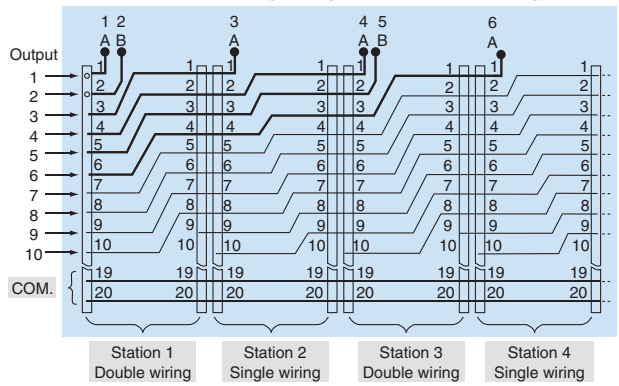

■ Connector entry direction can be changed with a single push. (F/P kit)

The connector entry direction can be changed from the top to the side by simply pressing the manual release button.
It is not necessary to use the manual release button when switching from the side to the top.

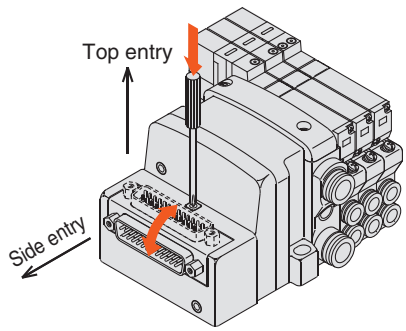

Sub-plate/Base Mounted: Variations

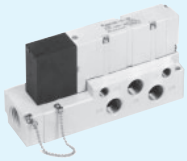

Sub-plate

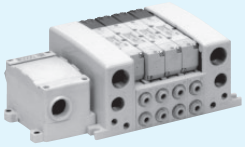

Base mounted

				Flow rate characteristics Q [l/min (ANR)] (Values: CYL → EXH (4/2 → 5/3))		S Kit					
						Serial transmission					
						SI Unit series	EX600	EX500	EX260	EX250	EX126
						Compatible Protocol: PROFINET	●	●	●		
						EtherCAT®	●		●		
						EtherNet/IP™	●	●	●	●	
						PROFIBUS DP	●	●	●	●	
						DeviceNet™	●	●	●	●	
						CC-Link	●		●	●	●
						AS-Interface				●	
						CANopen				●	
						EtherNet POWERLINK			●		
							I/O Serial Unit: EX600 IP67 compliant	Decentralised serial wiring Gateway application requires a Gateway Unit and communication cable separately. Please contact SMC for more details. Serial Unit: EX500 IP67 compliant	Output Serial Unit: EX260 IP40 compliant IP67 compliant	I/O Serial Unit: EX250 IP67 compliant	Output Serial Unit: EX126 IP67 compliant
Sub-plate	Series VQC 4000	Metal seal	VQC4□00	1625	1492		—	—	—	—	—
Sub-plate	Series VQC 4000	Rubber seal	VQC4□01	1958	1767						
Sub-plate	Series VQC 5000	Metal seal	VQC5□00	3316	2681						
Sub-plate	Series VQC 5000	Rubber seal	VQC5□01	4350	3462						
Base Mounted	Series VQC 4000	Metal seal	VQC4□00	1625	1492		● Page 11	● Page 11	● Page 11	● Page 11	● Page 11
Base Mounted	Series VQC 4000	Rubber seal	VQC4□01	1958	1767						
Base Mounted	Series VQC 5000	Metal seal	VQC5□00	3316	2681		● Page 47	● Page 47	● Page 47	● Page 47	● Page 47
Base Mounted	Series VQC 5000	Rubber seal	VQC5□01	4350	3462						

	F Kit	P Kit	T Kit	L Kit	M Kit	Port size	
	D-sub connector	Flat ribbon cable	Terminal block box	Electrical entry	Circular connector	SUP EXH port	Cylinder port
	D-sub connector (Compatible with D-sub connector that complies with MIL standard.) 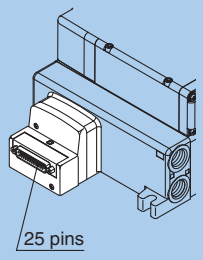 25 pins IP40 compliant	**Flat ribbon cable** (Compatible with flat ribbon cable connector that complies with MIL standard.) 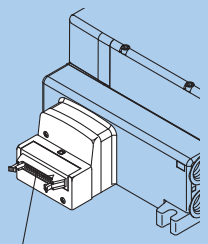 26 pins/20 pins IP40 compliant	**Terminal block box** (Terminal blocks) Terminals are concentrated in compact clusters within the terminal block box. 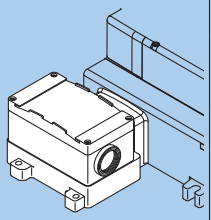 IP67 compliant	**Lead wire** (IP67 enclosure with use of multiple wire cable with sheath and waterproof connector) 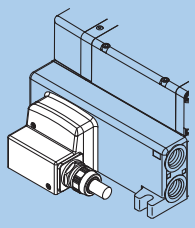 IP67 compliant	**Circular connector** (IP67 enclosure with use of waterproof multiple connector) 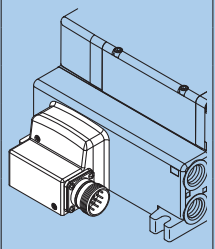 IP67 compliant	1, 3 (P, R)	2, 4 (A, B)
	—	—	—	—	—	1/4 3/8 (Rc, NPT, NPTF, G)	1/4 3/8 (Rc, NPT, NPTF, G)
						1/2 (Rc, NPT, NPTF, G)	1/2 (Rc, NPT, NPTF, G)
	● Page 21	● Page 23	● Page 25	● Page 27	● Page 29	<SUP port> 1/2 (Rc, NPT, NPTF, G) <EXH port> 3/4 (Rc, NPT, NPTF, G)	C6 (for Ø 6) C8 (for Ø 8) C10 (for Ø 10) C12 (for Ø 12) N7 (Ø 1/4") N9 (Ø 5/16") N11 (Ø 3/8") 1/4 3/8 1/4 (Bottom ported) (Rc, NPT, NPTF, G)
	● Page 57	● Page 59	● Page 61	● Page 63	● Page 65	<SUP port> D side 1/2 (Rc, NPT, NPTF, G) U side 3/8 (Rc, NPT, NPTF, G) <EXH port> D side 1/2 (Rc, NPT, NPTF, G) U side 3/8 (Rc, NPT, NPTF, G)	3/8 1/2 1/2 (Bottom ported) (Rc, NPT, NPTF, G)

Cylinder Speed Chart

VQC4000

This chart is provided as guidelines only.
For performance under various conditions, use SMC's Model Selection Software before making a judgment.

Average speed [mm/s]	Bore size																	
	Series CJ2 Pressure 0.5 MPa Load ratio 50 % Stroke 60 mm			Series CM2 Pressure 0.5 MPa Load ratio 50 % Stroke 300 mm				Series MB, CA2 Pressure 0.5 MPa Load ratio 50 % Stroke 500 mm					Series CS1, CS2 Pressure 0.5 MPa Load ratio 50 % Stroke 1000 mm					
	Ø 6	Ø 10	Ø 16	Ø 20	Ø 25	Ø 32	Ø 40	Ø 40	Ø 50	Ø 63	Ø 80	Ø 100	Ø 125	Ø 140	Ø 160	Ø 180	Ø 200	Ø 250

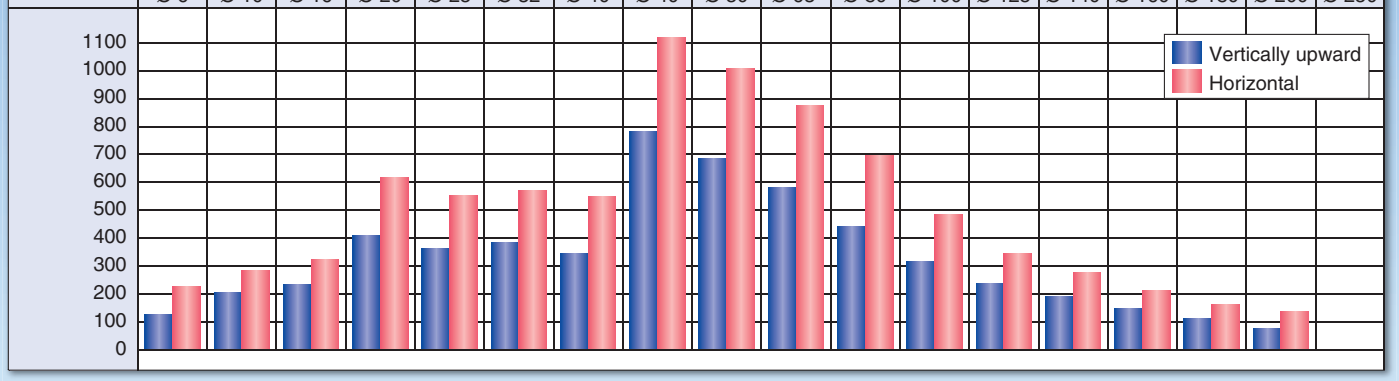

∗ Values at extension of a directly coupled cylinder when meter-out speed controllers are used with the needle full open.
∗ The average speed of the cylinder is obtained by dividing the stroke by the total stroke time.
∗ The load ratio is obtained by the following formula: ((Load mass x 9.8)/Theoretical output) x 100 %

Conditions

Base mounted	Series CJ2	Series CM2	Series MB, CA2	Series CS1, CS2
Tube x Length	T0604 x 1 m	T1075 x 1 m	T1209 x 1 m	
Speed controller	AS3002F-06	AS4002F-10	AS4002F-12	
Silencer	AN40-04			AN40-04

Conditions [With SGP (Steel Pipe)]

Body ported	Series MB, CA2	Series CS1, CS2
Tube x Length	SGP10A x 1 m	
Speed controller	AS420-03	
Silencer	AN40-04	

VQC5000

This chart is provided as guidelines only.
For performance under various conditions, use SMC's Model Selection Software before making a judgment.

Average speed [mm/s]	Bore size									
	Series MB, CA1 Pressure 0.5 MPa Load ratio 50 % Stroke 500 mm				Series CS1 Pressure 0.5 MPa Load ratio 50 % Stroke 1000 mm					
	Ø 50	Ø 63	Ø 80	Ø 100	Ø 125	Ø 140	Ø 160	Ø 180	Ø 200	Ø 250

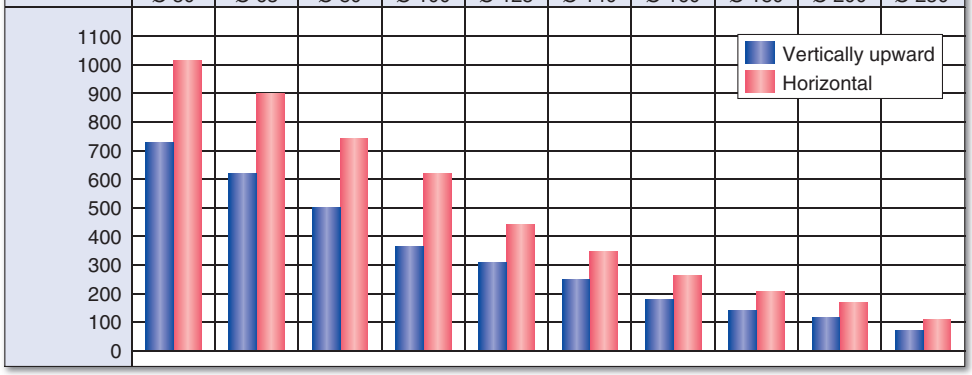

∗ Values at extension of a directly coupled cylinder when meter-out speed controllers are used with the needle full open.
∗ The average speed of the cylinder is obtained by dividing the stroke by the total stroke time.
∗ The load ratio is obtained by the following formula: ((Load mass x 9.8)/Theoretical output) x 100 %

Conditions

Speed controller	Silencer	SPG (Steel pipe) dia. x Length
AS420-04	AN40-04	10A x 1 m

INDEX

Sub-plate/Base Mounted: Variations ..... Page 3
Cylinder Speed Chart ..... Page 5

Series VQC4000

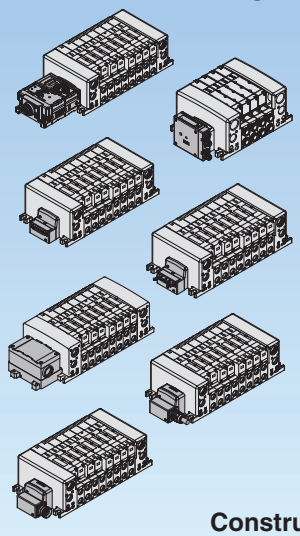

Plug-in: Single Unit ..... Page 7
Plug-in Unit: Manifold ..... Page 11
S Kit (Serial transmission kit): EX600 [IP67]/ EX500 [IP67]/EX260 [IP40/IP67]/ EX250 [IP67]/EX126 [IP67] ..... Page 15
F Kit (D-sub connector kit) [IP40] ..... Page 21
P Kit (Flat ribbon cable kit) [IP40] ..... Page 23
T Kit (Terminal block box kit) [IP67] ..... Page 25
L Kit (Lead wire kit) [IP67] ..... Page 27
M Kit (Circular connector kit) [IP67] ..... Page 29
Construction ..... Page 31
Exploded View of Manifold ..... Page 32
Specific Product Precautions ..... Page 37

Series VQC5000

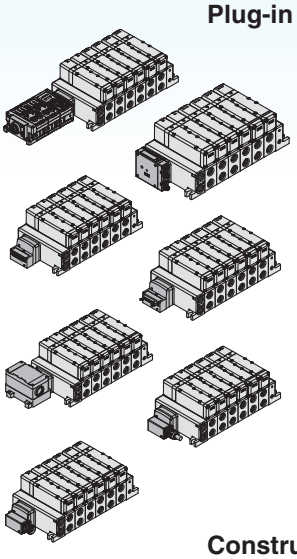

Plug-in: Single Unit ..... Page 43
Plug-in Unit: Manifold ..... Page 47
S Kit (Serial transmission kit): EX600 [IP67]/ EX500 [IP67]/EX260 [IP40/IP67]/ EX250 [IP67]/EX126 [IP67]/ ..... Page 51
F Kit (D-sub connector kit) [IP40] ..... Page 57
P Kit (Flat ribbon cable kit) [IP40] ..... Page 59
T Kit (Terminal block box kit) [IP67] ..... Page 61
L Kit (Lead wire kit) [IP67] ..... Page 63
M Kit (Circular connector kit) [IP67] ..... Page 65
Construction ..... Page 67
Exploded View of Manifold ..... Page 68
Specific Product Precautions ..... Page 73

Base Mounted

Plug-in: Single Unit

Series VQC4000

Model

Series	Configuration		Model		Port size	Flow-rate characteristics								Response time [ms]		Weight [kg]
						1 → 4/2 (P → A/B)				4/2 → 5/3 (A/B → EA/EB)				Standard: 0.95 W	Low wattage type: 0.4 W	
						C [dm³/(s·bar)]	b	Cv	Q [l/min (ANR)] Note 4)	C [dm³/(s·bar)]	b	Cv	Q [l/min (ANR)] Note 4)			
VQC4000	2-position	Single	Metal seal	**VQC4100**	3/8	6.2	0.19	1.5	1477	6.9	0.17	1.7	1625	20	22	0.23
			Rubber seal	**VQC4101**		7.2	0.43	2.1	2002	7.3	0.38	2.0	1958	25	27	
		Double	Metal seal	**VQC4200**		6.2	0.19	1.5	1477	6.9	0.17	1.7	1625	12	16	0.26
			Rubber seal	**VQC4201**		7.2	0.43	2.1	2002	7.3	0.38	2.0	1858	15	17	
	3-position	Closed centre	Metal seal	**VQC4300**		5.9	0.23	1.5	1438	6.3	0.18	1.6	1492	45	47	0.28
			Rubber seal	**VQC4301**		7.0	0.34	1.9	1827	6.4	0.42	1.9	1767	50	52	
		Exhaust centre	Metal seal	**VQC4400**		6.2	0.18	1.5	1469	6.9	0.17	1.7	1625	45	47	0.28
			Rubber seal	**VQC4401**		7.0	0.38	1.9	1877	7.3	0.38	2.0	1958	50	52	
		Pressure centre	Metal seal	**VQC4500**		6.2	0.18	1.6	1469	6.4	0.18	1.6	1516	45	47	0.28
			Rubber seal	**VQC4501**		7.0	0.38	1.9	1877	7.1	0.38	2.0	1904	50	52	
		Double check	Metal seal	**VQC4600**		2.7	—	—	584	3.7	—	—	800	55	57	0.50
			Rubber seal	**VQC4601**		2.8	—	—	606	3.9	—	—	844	62	64	

Note 1) Cylinder port 3/8: Value for valve on sub-plate
Note 2) Based on JIS B 8375-1981. (Supply pressure: 0.5 MPa, with indicator light and surge voltage suppressor, clean air. This will change depending on pressure and air quality.) The value when ON for the double type.
Note 3) Table: Without sub-plate, With sub-plate: Add 0.41 kg.
Note 4) These values have been calculated according to ISO 6358 and indicate the flow rate under standard conditions with an inlet pressure of 0.6 MPa (relative pressure) and a pressure drop of 0.1 MPa.

Plug-in unit

Symbol

2-position single

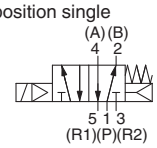

2-position double (Metal)

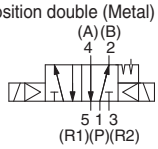

2-position double (Rubber)

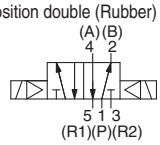

3-position closed centre

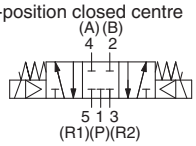

3-position exhaust centre

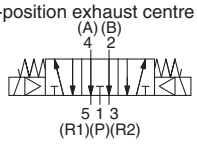

3-position pressure centre

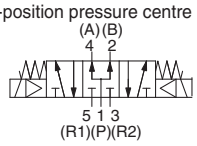

3-position double check

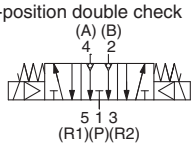

Standard Specifications

Valve specifications	**Valve construction**		Metal seal	Rubber seal
	Fluid		Air/Inert gas	
	Max. operating pressure	**Standard (DC and AC)**	1.0 MPa	
		Low wattage type (DC)		
	Min. operating pressure	**Single**	0.15 MPa	0.20 MPa
		Double	0.15 MPa	
		3-position	0.15 MPa	0.20 MPa
	Proof pressure		1.5 MPa	
	Ambient and fluid temperature		−10 to 50 °C Note 1)	
	Lubrication		Not required	
	Manual override		Push type/Locking type (Tool required)/Locking type (Manual)	
	Impact/Vibration resistance		150/30 m/s² Note 2)	
	Enclosure		Dust-tight (IP67 compatible) Note 3)	
Electrical specifications	**Coil rated voltage**		12, 24 V DC	
	Allowable voltage fluctuation		±10 % of rated voltage	
	Coil insulation type		Class B or equivalent	
	Power consumption [W]	**24 V DC**	0.95, (0.4 low voltage type)	
		12 V DC	0.95, (0.4 low voltage type)	

Note 1) Use dry air to prevent condensation when operating at low temperatures.
Note 2) Impact resistance: No malfunction occurred when it is tested with a drop tester in the axial direction and at the right angles to the main valve and armature in both energised and de-energised states every once for each condition. (Values at the initial period)
Vibration resistance: No malfunction occurred in a one-sweep test between 45 and 2000 Hz. Test was performed at both energised and de-energised states in the axial direction and at the right angles to the main valve and armature. (Values at the initial period)
Note 3) Only applicable to S, T, L and M kits

How to Order Valves

Plug-in VQC4 [1] [0] [0] [ ] – [ ] [ ] [ ] 1 – [ ] [ ] [ ]

Type of actuation

1		2-position single
2	Metal	2-position double
2	Rubber	2-position double
3		3-position closed centre
4		3-position exhaust centre
5		3-position pressure centre
Note) 6		3-position double check

Note) For double check type, refer to the catalogue of the VQ4000/5000 series on website **www.smc.eu**

Body

0: Plug-in sub-plate

Seal

0	Metal seal
1	Rubber seal

Function

— Note 1)	Standard (0.95 W)
Y	Low wattage type (0.4 W)
R Note 2)	External pilot

Coil voltage

5	24 V DC
6	12 V DC

Light/Surge voltage suppressor

—	Yes
E	Without light, with surge voltage suppressor

Manual override

—: Non-locking push type (Tool required)

B: Locking type (Tool required)

C: Locking type (Manual)

Porting specifications

—	Side ported
B	Bottom ported

Port size

—	Without sub-plate (For manifold)
02	1/4
03	3/8

Thread type

—	Rc
N	NPT
T	NPTF
F	G

Note 1) When the power is energised continuously, refer to "Specific Product Precautions 1" on page 37.
Note 2) For details about external pilot type, refer to the catalogue of the VQ4000/5000 series on website **www.smc.eu.** In addition, external pilot type cannot be combined with a double check spacer.
Note 3) When multiple symbols are specified, indicate them alphabetically.

How to Order Sub-plates

VQ4000 – PW – [ ] [02] [ ] – Q

Porting specifications

—	Side ported
B	Bottom ported

Port size

02	1/4
03	3/8

Thread type

—	Rc
N	NPT
T	NPTF
F	G

Replacement of pilot valve assembly (Voltage)
· Refer to page 35 for pilot valve assembly part numbers.
· Refer to page 38 for replacement method.

Dimensions: Plug-in Type

Conduit terminal

2-position single: VQC410$^{0}_{1}$-□

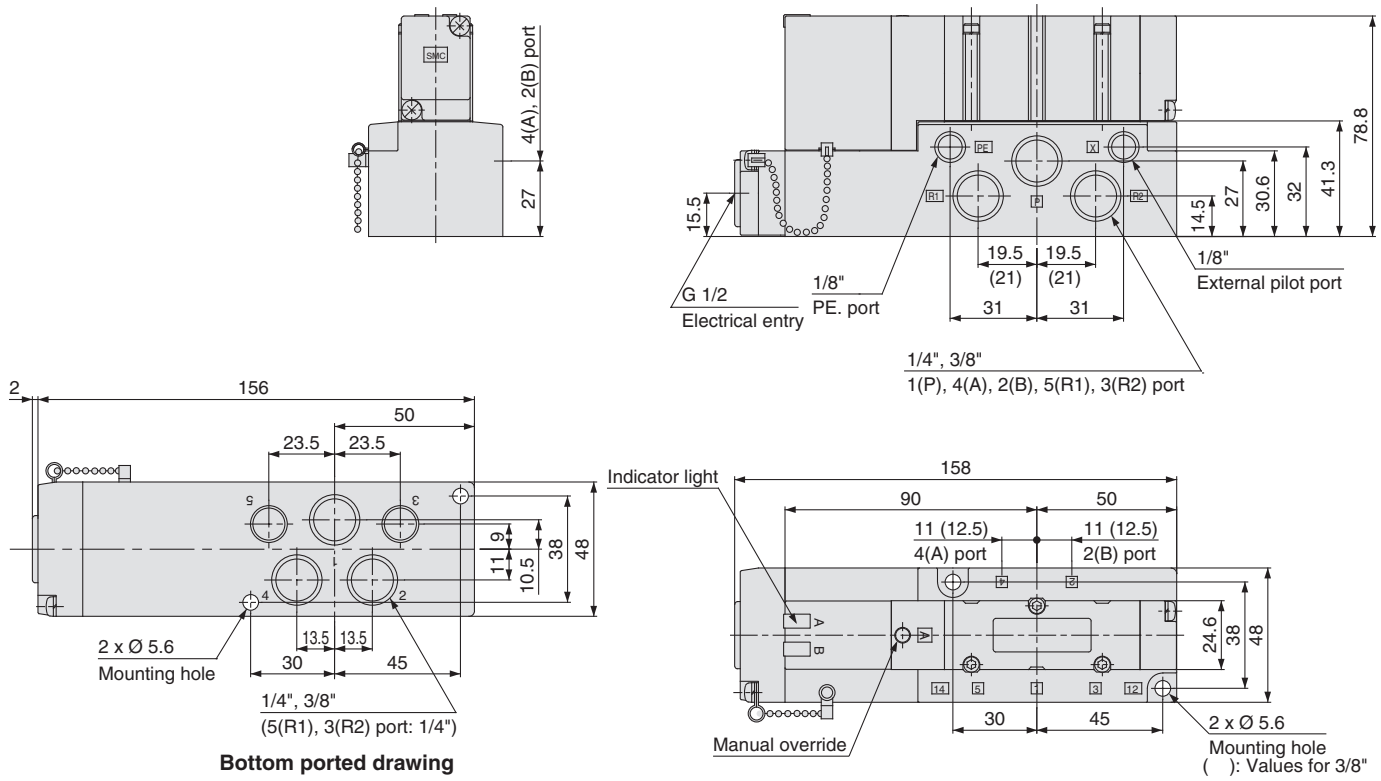

2-position double: VQC420$^{0}_{1}$-□
3-position closed centre: VQC430$^{0}_{1}$-□
3-position exhaust centre: VQC440$^{0}_{1}$-□
3-position pressure centre: VQC450$^{0}_{1}$-□

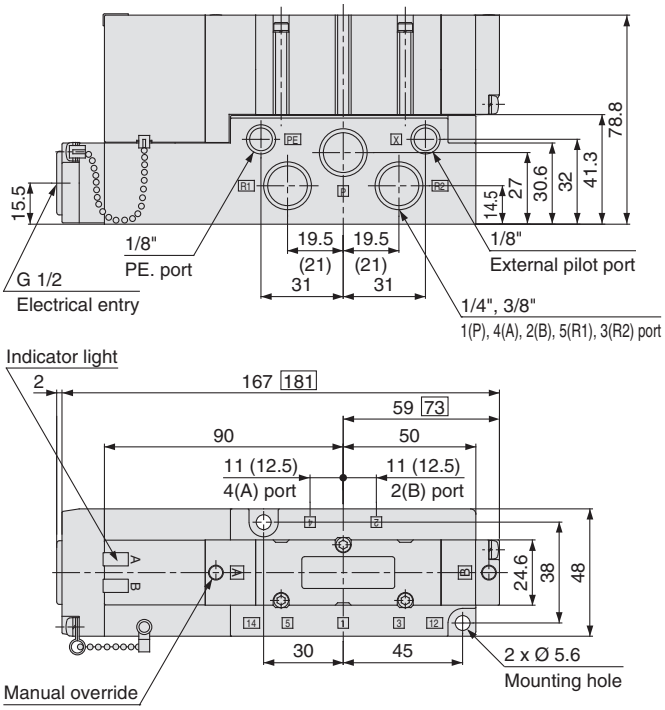

3-position double check: VQC460$^{0}_{1}$-□

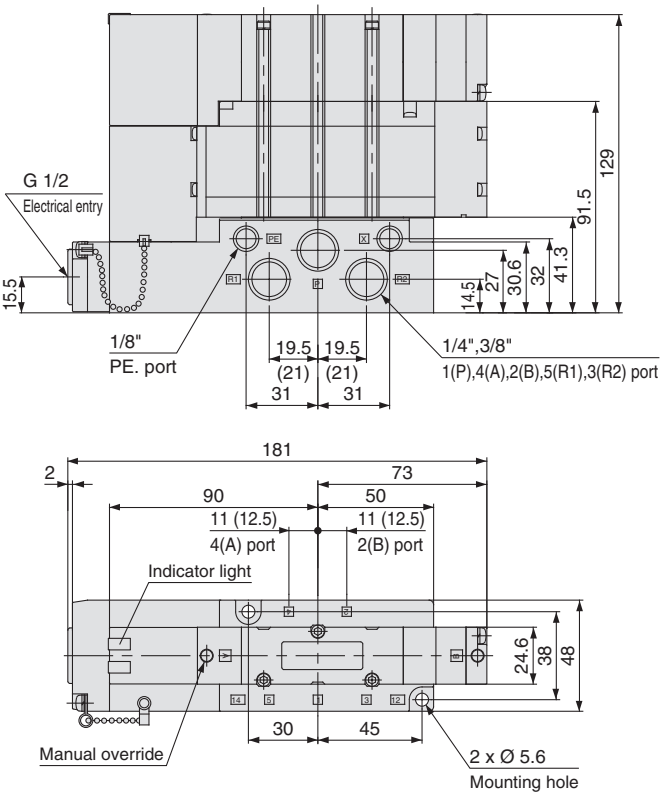

□: Values for 3-position
( ): Values for 3/8"

Base Mounted

Plug-in Unit

Series VQC4000

How to Order Manifold

VV5QC 4 1 – 08 02 □ TD0 — □ ···· F · L · M / P · T Kit

VV5QC 4 1 – 16 02 □ SDQ □ □ □ □ □ □ – □ ···· S Kit

❶ ❷ ❸ ❹ ❺ ❻ ❼ ❽ ❾ ❿ ⓫

Series VQC4000

Base mounted plug-in

Enter only for EX600-compliant S kit

Enter only for EX250-compliant S kit

❶ Stations

01	1 station
⋮	⋮
16	16 stations

The minimum or maximum number of stations differs depending on the electrical entry. (Refer to ❹)

Note) In the case of compatibility with the S kit/As-Interface, the maximum number of solenoids is as shown below, so please be careful of the number of stations.
8 in/8 out: Maximum 8 solenoids
4 in/4 out: Maximum 4 solenoids

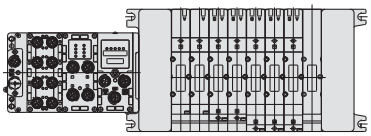

D side Stations···1···2···3···4···5···6···7···8···n U side

∗ Stations are counted from station 1 on the D-side.

❷ Cylinder port size

C6	With Ø 6 One-touch fitting
C8	With Ø 8 One-touch fitting
C10	With Ø 10 One-touch fitting
C12	With Ø 12 One-touch fitting
N7	For Ø 1/4"
N9	For Ø 5/16"
N11	For Ø 3/8"
02	1/4
03	3/8
B	Bottom ported 1/4
CM	Mixed

❸ Thread type

—	Rc
F	G
N	NPT
T	NPTF

❿ Input block COM
(Enter only for S kit compliant with EX250.)

—	PNP sensor input or without input block
N	NPN sensor input

❻ SI Unit output polarity

SI Unit output polarity		EX250 integrated-type (for I/O) serial transmission system					
		DeviceNet™	PROFIBUS DP	CC-Link	AS-Interface	CANopen	EtherNet/IP™
—	+ COM	—	—	○	—	—	—
N	– COM	○	○	—	○	○	○

SI Unit output polarity		EX260 integrated-type (for output) serial transmission system						
		DeviceNet™	PROFIBUS DP	CC-Link	EtherCAT®	PROFINET	EtherNet/IP™	EtherNet POWERLINK
—	+ COM	○	○	○	○	○	○	—
N	– COM	○	○	○	○	○	○	○

SI Unit output polarity		EX500 gateway descentralised system (64 points)			EX500 gateway descentralised system 2 (128 points)	
		DeviceNet™	PROFIBUS DP	EtherNet/IP™	EtherNet/IP™	PROFINET
—	+ COM	○	○	○	—	—
N	– COM	○	○	○	○	○

SI Unit output polarity		EX600 integrated-type (for I/O) serial transmission system (Fieldbus system)								
		DeviceNet™	PROFIBUS DP	CC-Link	EtherCAT®	PROFINET	EtherNet/IP™	EtherNet/IP™ compatible wireless base	PROFINET compatible wireless base	Wireless remote
—	+ COM	○	○	○	○	○	○	○	○	○
N	– COM	○	○	○	○	○	○	○	○	○

Note) Leave the box blank for without SI Unit (SD0□, SD60).

❺ End plate type
(Enter only for EX600-compliant S kit.)

—	Without end plate
2	M12 connector power supply
3	7/8 inch connector power supply
4	M12 connector power supply (4pins/5pins) IN/OUT
5	M12 connector power supply (4pins/5pins) IN/OUT

Note) Without SI Unit, the symbol is —.
∗ The pin layout for "4" and "5" pin connector is different.

❼ I/O Unit stations
(Enter only for EX600-compliant S kit.)

—	None
1	1 station
⋮	⋮
9	9 stations

Note 1) Without SI Unit, the symbol is —.
Note 2) SI Unit is not included in I/O Unit stations.
Note 3) When I/O Unit is selected, it is shipped separately, and assembled by customer. Refer to the attached operation manual for mounting method.
Note 4) Refer to page 41 for details about the enclosure.

❽ Input block type
(Enter only for S kit compliant with EX250.)

Symbol	Number of blocks
—	Without SI Unit (SD0)
0	Without input block
1	With 1 input block
⋮	⋮
4	With 4 input blocks
⋮	⋮
8	With 8 input blocks

❾ Number of input blocks
(Enter only for S kit compliant with EX250.)

—	Without input block
1	M12, 2 inputs
2	M12, 4 inputs
3	M8, 4 inputs

⓫ Option

—	None
K	Special wiring specifications (except for double wiring)
N	With name plate (available for T kit only)
S Note)	Direct EXH outlet with built-in silencer

Note) The silencer is built into the R port passage of the end plate and the silenced air is exhausted from the R port.
∗ When two or more symbols are specified, indicate them alphabetically. Example: -KN5

❹ Kit type/Electrical entry/Cable length

∗ Numbers in parentheses represent the maximum number of solenoids in the case of mixed single and double wiring. The total number of solenoids determines the maximum number of stations. When ordering mixed wiring, please add the option symbol "-K".

S Kit (Serial transmission kit (Fieldbus system) : EX600 integrated-type (for I/O))

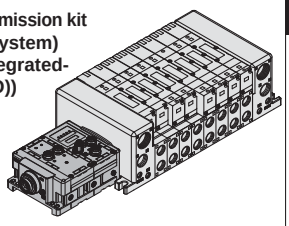

SI Unit: **EX600**

IP67 compliant

SD60	Serial kit without SI Unit	1 to 12 stations (16 stations, 24 points)
SD6Q	DeviceNet™	
SD6N	PROFIBUS-DP	
SD6V	CC-LINK	
SD6ZE	EtherNet/IP™ (1 port)	
SD6EA	EtherNet/IP™ (2 port)	
SD6D	EtherCAT®	
SD6F	PROFINET	
SD6WE	EtherNet/IP™ compatible wireless base Note 5)	
SD6WF	PROFINET compatible wireless base Note 5)	
SD6WS	Wireless remote Note 5)	

S Kit (Serial transmission kit: EX500 gateway-type)

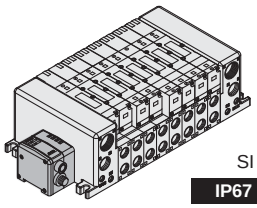

SI Unit: **EX500**

IP67 compliant

SD0A	Serial kit without SI Unit	—	—
SDA2	EX500 Gateway Decentralised system (64 points) DeviceNet™, PROFIBUS DP, EtherNet/IP™	16 Outputs	1 to 8 stations (16 stations, 16 points)
SDA3	EX500 Gateway Decentralised system 2(128 points) PROFINET, EtherNet/IP™	Note 1) 32 Outputs	1 to 12 stations (16 stations, 24 points)

S Kit (Serial transmission kit: EX260 integrated-type (for output))

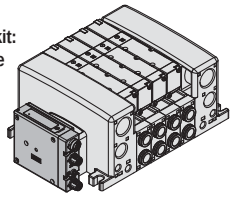

SI Unit: **EX260**

IP40 compliant

IP67 compliant

Symbol	Protocol	Number of outputs	Communication connector	Stations
SD0A	Serial kit without SI Unit			1 to 16 stations (16 stations, 24 points)
SQA	DeviceNet™	32	M12	
SQB		16		1 to 8 stations (16 stations, 16 points)
SNA	PROFIBUS DP	32	M12	1 to 12 stations (16 stations, 24 points)
SNB		16		1 to 8 stations (16 stations, 16 points)
SNC		32	D-sub Note 2)	1 to 12 stations (16 stations, 24 points)
SND		16		1 to 8 stations (16 stations, 16 points)
SVA	CC-Link	32	M12	1 to 12 stations (16 stations, 24 points)
SVB		16		1 to 8 stations (16 stations, 16 points)
SDA	EtherCAT®	32	M12	1 to 12 stations (16 stations, 24 points)
SDB		16		1 to 8 stations (16 stations, 16 points)
SFA	PROFINET	32	M12	1 to 12 stations (16 stations, 24 points)
SFB		16		1 to 8 stations (16 stations, 16 points)
SEA	EtherNet/IP™	32	M12	1 to 12 stations (16 stations, 24 points)
SEB		16		1 to 8 stations (16 stations, 16 points)
SGA	EtherNet POWERLINK	32	M12	1 to 12 stations (16 stations, 24 points)
SGB		16		1 to 8 stations (16 stations, 16 points)

S Kit (Serial transmission kit: EX250 integrated-type (for I/O))

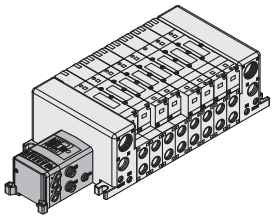

SI Unit: **EX250** **IP67 compliant**

SD0	Serial kit without SI Unit	1 to 12 stations (16 stations, 24 points)
SDQ	DeviceNet™	
SDN	PROFIBUS-DP	
SDV	CC-LINK	
SDTA	AS-Interface, 8 in/out, 31 slave modes, 2 power supply systems	1 to 4 stations (8 stations, 8 points)
SDTB	AS-Interface, 4 in/out, 31 slave modes, 2 power supply systems	1 to 2 stations (4 stations, 4 points)
SDTC Note 1)	AS-Interface, 8 in/out, 31 slave modes, 1 power supply system	1 to 4 stations (8 stations, 8 points)
SDTD Note 1)	AS-Interface, 4 in/out, 31 slave modes, 1 power supply system	1 to 2 stations (4 stations, 4 points)
SDY	CANopen	1 to 12 stations (16 stations, 24 points)
SDZEN	EtherNet/IP™	

S Kit (Serial transmission kit: EX126 integrated-type (for output))

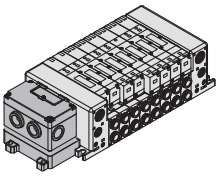

SI Unit: **EX126** **IP67 compliant**

SDVB	Serial kit for CC-LINK	1 to 8 stations (16 stations, 16 points)

P Kit (Flat ribbon cable kit)

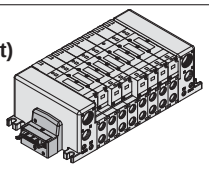

IP40 compliant

Note) For a 20P flat ribbon cable, the cable assembly must be ordered separately.

PD0	Flat ribbon cable kit (26P) without cable	1 to 12 stations (16 stations, 24 points)
PD1	Flat ribbon cable kit (26P) with 1.5 m cable	
PD2	Flat ribbon cable kit (26P) with 3.0 m cable	
PD3	Flat ribbon cable kit (26P) with 5.0 m cable	
PDC	Flat ribbon cable kit (20P) without cable Note)	1 to 8 stations (16 stations, 16 points)

F Kit (D-sub connector kit)

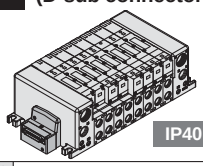

IP40 compliant

FD0	D-sub connector kit (25P) without cable	1 to 12 stations (16 stations, 24 points)
FD1	D-sub connector kit (25P) with 1.5 m cable	
FD2	D-sub connector kit (25P) with 3.0 m cable	
FD3	D-sub connector kit (25P) with 5.0 m cable	

M Kit (Circular connector kit)

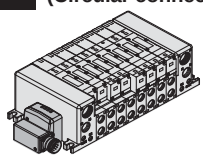

IP67 compliant

MD0	Circular connector kit (26P) without cable	1 to 12 stations (16 stations, 24 points)
MD1	Circular connector kit (26P) with 1.5 m cable	
MD2	Circular connector kit (26P) with 3.0 m cable	
MD3	Circular connector kit (26P) with 5.0 m cable	

T Kit (Terminal block box kit)

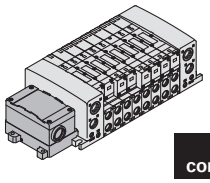

IP67 compliant

TD0	Terminal block box kit	1 to 10 stations (16 stations, 20 points)

L Kit (Lead wire kit)

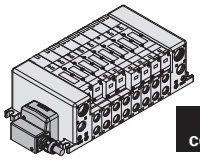

IP67 compliant

LD0	Lead wire kit, 0.6 m lead wire	1 to 12 stations (16 stations, 24 points)
LD1	Lead wire kit, 1.5 m lead wire	
LD2	Lead wire kit, 3.0 m lead wire	

∗ The maximum number of solenoids displayed in parentheses is applied to the special wiring specification (Option "-K").
Note 1) When using the II Unit with 32 outputs use the GW Unit compatible with the EX500 Gateway Decentralised System 2 (128 points).
Note 2) When selecting SI Units with SDTC or SDTD specifications, there are limits to the supply current from the SI Unit to the input block or valve. For details, refer to the catalogue on the website **www.smc.eu**.
Note 3) When selecting D-sub S kit specifications only, IP40 is compatible. (All other SI Units are IP67 compliant.)
Note 4) For the SI Unit part no., refer to page 14.
Note 5) The wireless system is suitable for use only in a country where it is in accordance with the Radio Act and regulations of that country.

How to Order Valves

VQC 4 1 0 0 □ – 5 □ □ 1

Series VQC4000 ● ⓪ ❶ ❷ ❸ ❹ ❺

⓪ Type of actuation

1	2-position single (A) (B) 4 2 / 5 1 3 (R1) (P) (R2)	4	3-position exhaust centre (A) (B) 4 2 / 5 1 3 (R1) (P) (R2)
2	2-position double (Metal) (A) (B) 4 2 / 5 1 3 (R1) (P) (R2)	5	3-position pressure centre (A) (B) 4 2 / 5 1 3 (R1) (P) (R2)
	2-position double (Rubber) (A) (B) 4 2 / 5 1 3 (R1) (P) (R2)	6	3-position double check (A) (B) 4 2 / 5 1 3 (R1) (P) (R2)
3	3-position closed centre (A) (B) 4 2 / 5 1 3 (R1) (P) (R2)		

❶ Seal type

0	Metal seal
1	Rubber seal

❷ Function

— Note 1)	Standard (0.95 W)
Y	Low wattage type (0.4 W)
R Note 2)	External pilot

Note 1) When the power is energised continuously, refer to "Specific Product Precautions 1" on page 37.
Note 2) For details about external pilot type, refer to the catalogue of the VQ4000/5000 series on the website **www.smc.eu**. In addition, external pilot type cannot be combined with a double check spacer.
Note 3) When multiple symbols are specified, indicate them alphabetically.

❸ Coil voltage

5	24 V DC Note)
6	12 V DC

Note) S kit is only available for 24 V DC.

❹ Light/Surge voltage suppressor

—	Yes
E	Without light, with surge voltage suppressor

❺ Manual override

—: Non-locking push type (Tool required)

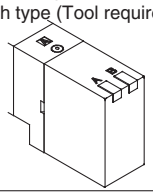

B: Locking type (Tool required)

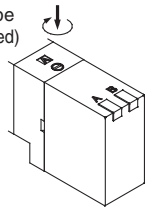

C: Locking type (Manual)

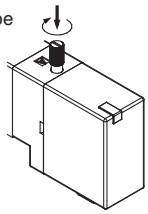

How to Order Manifold Assembly

Example (VV5QC41-□SD6□)

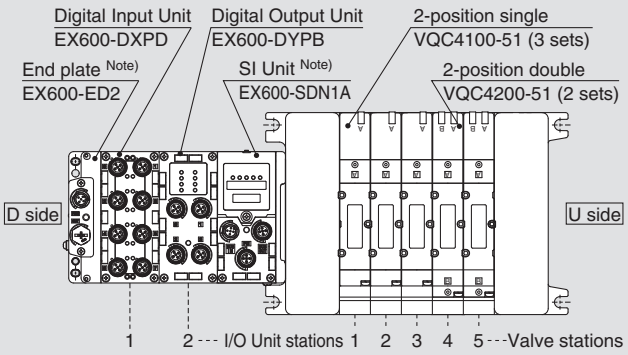

VV5QC41-0502SD6Q2N2···1 set (S kit 5-station manifold base part number)
∗VQC4100-51·····3 sets (2-position single part number)
∗VQC4200-51·····2 sets (2-position double part number)
∗EX600-DXPD·····1 set I/O Unit part number (Station 1)
∗EX600-DYPB·····1 set I/O Unit part number (Station 2)
∗ The asterisk denotes the symbol for assembly.
∗ Prefix it to the part numbers of the valve etc.

- The valve arrangement is numbered as the 1st station from the D side.
- Under the manifold part number, state the valves to be mounted, then the I/O Units in order from the 1st station as shown in the figure above. If the arrangement becomes complicated, specify on a manifold specification sheet.

Note) Do not enter the SI Unit part number and the end plate part number together.

Manifold Specifications

Series	Base model	Connection type	Piping specifications: Port direction	Port size Note 1): 1, 3 (P, R)	Port size Note 1): 2, 4 (A, B)	Applicable stations Note 2)	Applicable solenoid valve	5-station weight [g]
VQC4000	VV5QC41-□□□	■F kit: D-sub connector ■P kit: Flat ribbon cable ■T kit: Terminal block box ■S kit: Serial transmission ■L kit: Lead wire ■M kit: Circular connector	Side	P: 1/2 (Rc, G, NPT/NPTF) R: 3/4 (Rc, G, NPT/NPTF)	C6 (for Ø 6) C8 (for Ø 8) C10 (for Ø 10) C12 (for Ø 12) 1/4 (Rc,G,NPT/NPTF) 3/8 (Rc,G,NPT/NPTF)	F, L, M, P kit (1 to 16 stations) T kit (1 to 16 stations) S kit (1 to 16 stations: EX250, 1 to 16 stations: EX500)	VQC4□00-51 VQC4□01-51	4150 · S kit (Without Unit) · Not including valve weight.
			Bottom		1/4 (Rc,G,NPT/NPTF)			

Note 1) One-touch fittings in inch sizes are also available.
Note 2) An optional specification for special wiring is available to increase the maximum number of stations.

SI Unit Part Number Table

EX600 Integrated type (For Input/Output)

Symbol	Applicable protocol	SI Unit part no.		Page
		Negative common (PNP)	Positive common (NPN)	
SD6Q	DeviceNet™	EX600-SDN1A	EX600-SDN2A	33
SD6N	CC-Link	EX600-SMJ1	EX600-SMJ2	
SD6V	PROFIBUS DP	EX600-SPR1A	EX600-SPR2A	
SD6ZE	EtherNet/IP™ (1 port)	EX600-SEN1	EX600-SEN2	
SD6EA	EtherNet/IP™ (2 port)	EX600-SEN3	EX600-SEN4	
SD6D	EtherCAT®	EX600-SEC1	EX600-SEC2	
SD6F	PROFINET	EX600-SPN1	EX600-SPN2	
SD6WE	EtherNet/IP™, compatible wireless base Note)	EX600-WEN1	EX600-WEN2	
SD6WF	PROFINET, compatible wireless base Note)	EX600-WPN1	EX600-WPN2	
SD6WS	Wireless remote Note)	EX600-WSN1	EX600-WSN2	

Note) The wireless system is suitable for use only in a country where it is in accordance with the Radio Act and regulations of that country.

EX260 Integrated type (For Output)

Symbol	Applicable protocol	Number of outputs	SI Unit part no.		Communication connector	Page
			Negative common (PNP)	Positive common (NPN)		
SQA	DeviceNet™	32	EX260-SDN1	EX260-SDN2	M12	33
SQB		16	EX260-SDN3	EX260-SDN4		
SNA	PROFIBUS DP	32	EX260-SPR1	EX260-SPR2		
SNB		16	EX260-SPR3	EX260-SPR4		
SNC		32	EX260-SPR5	EX260-SPR6	D-sub	
SND		16	EX260-SPR7	EX260-SPR8		
SVA	CC-Link	32	EX260-SMJ1	EX260-SMJ2	M12	
SVB		16	EX260-SMJ3	EX260-SMJ4		
SDA	EtherCAT®	32	EX260-SEC1	EX260-SEC2	M12	
SDB		16	EX260-SEC3	EX260-SEC4		
SFA	PROFINET	32	EX260-SPN1	EX260-SPN2	M12	
SFB		16	EX260-SPN3	EX260-SPN4		
SEA	EtherNet/IP™	32	EX260-SEN1	EX260-SEN2	M12	
SEB		16	EX260-SEN3	EX260-SEN4		
SGA	EtherNet POWERLINK	32	EX260-SPL1	—	M12	
SGB		16	EX260-SPL3	—		

EX126 Integrated type (For Output)

Symbol	Applicable protocol	SI Unit part no.	Page
SDVB	CC-Link, Positive common (NPN)	EX126D-SMJ1	34

EX500 Gateway Decentralised System 2 (128 points)

Symbol	Applicable protocol	SI Unit part no.	Page
		Negative common (PNP)	
SDA3	EtherNet/IP™	EX500-S103	33
	PROFINET		

EX500 Gateway Decentralised System (64 points)

Symbol	Applicable protocol	SI Unit part no.		Page
		Positive common (NPN)	Negative common (PNP)	
SDA2	DeviceNet™	EX500-Q001	EX500-Q101	33
	PROFIBUS DP			
	EtherNet/IP™			

EX250 Integrated type (For Input/Output)

Symbol	Applicable protocol	SI Unit part no.	Page
SDQ	DeviceNet™, Negative common (PNP)	EX250-SDN1	34
SDN	PROFIBUS DP, Negative common (PNP)	EX250-SPR1	
SDV	CC-Link, Positive common (NPN)	EX250-SMJ2	
SDTA	AS-Interface, Negative common (PNP), (8 in/8 out, 31 slave modes, 2 power supply systems)	EX250-SAS3	
SDTB	AS-Interface, Negative common (PNP), (4 in/4 out, 31 slave modes, 2 power supply systems)	EX250-SAS5	
SDTC	AS-Interface, Negative common (PNP), (8 in/8 out, 31 slave modes, 1 power supply system)	EX250-SAS7	
SDTD	AS-Interface, Negative common (PNP), (4 in/4 out, 31 slave modes, 1 power supply system)	EX250-SAS9	
SDY	CANopen, Negative common (PNP)	EX250-SCA1A	
SDZEN	EtherNet/IP™, Negative common (PNP)	EX250-SEN1	

For details about the EX series refer to their catalogues on the website www.smc.eu and the Operation Manual. Please download the Operation Manual via SMC website, http://www.smc.eu

Manifold Options

For details about options, refer to the catalogue of the VQ4000/5000 series on **www.smc.eu.**

Blanking plate assembly
VVQ4000-10A-1

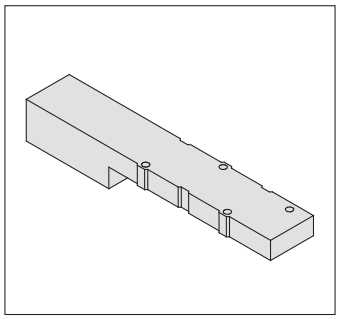

Individual SUP spacer
VVQ4000-P-1- $^{02}_{03}$

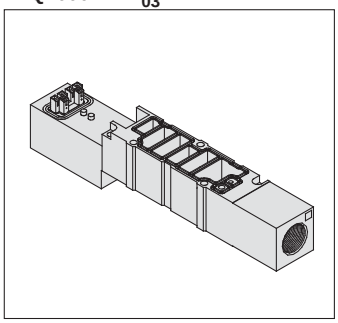

Individual EXH spacer
VVQ4000-R-1- $^{02}_{03}$

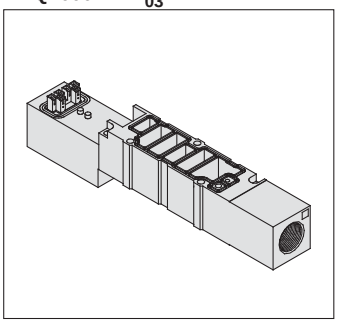

SUP/EXH block plate
VVQ4000-16A

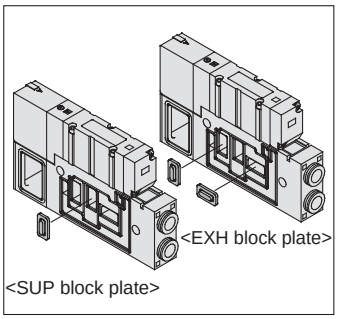

Restrictor spacer
VVQ4000-20A-1

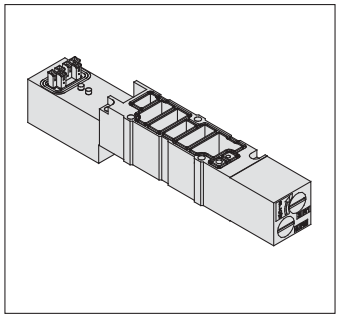

Double check spacer with residual pressure exhaust
VVQ4000-25A-1 Note)

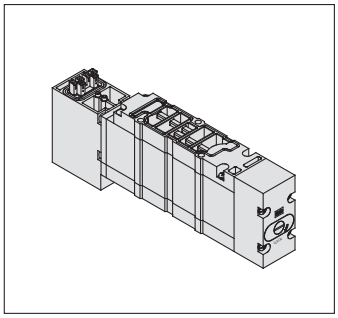

SUP stop valve spacer
VVQ4000-37A-1

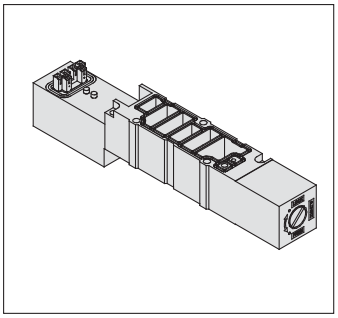

Interface regulator (P, A, B port regulation)
ARBQ4000-00- $^{A}_{B}$ $_{P}$**-1**

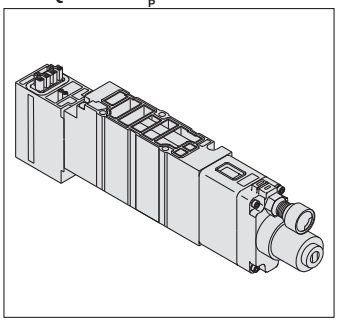

Note) The double check spacer with residual pressure release valve cannot be combined with external pilot type.

· For replacement parts, refer to page 35.

S VQC4000

Kit (Serial transmission kit): For EX600 Integrated-type (I/O) Serial Transmission System IP67 compliant

VV5QC41
S kit (Serial transmission kit: EX600)
Power supply with M12 connector

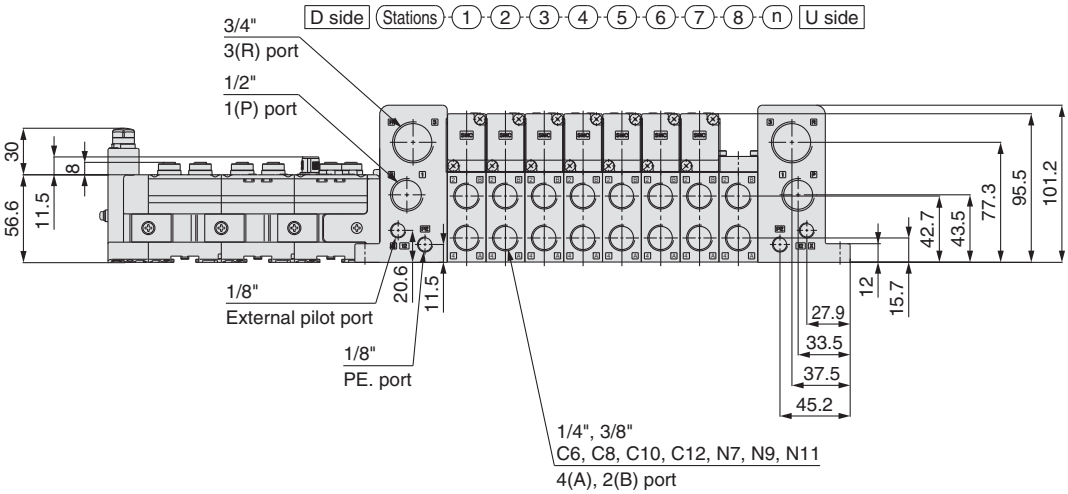

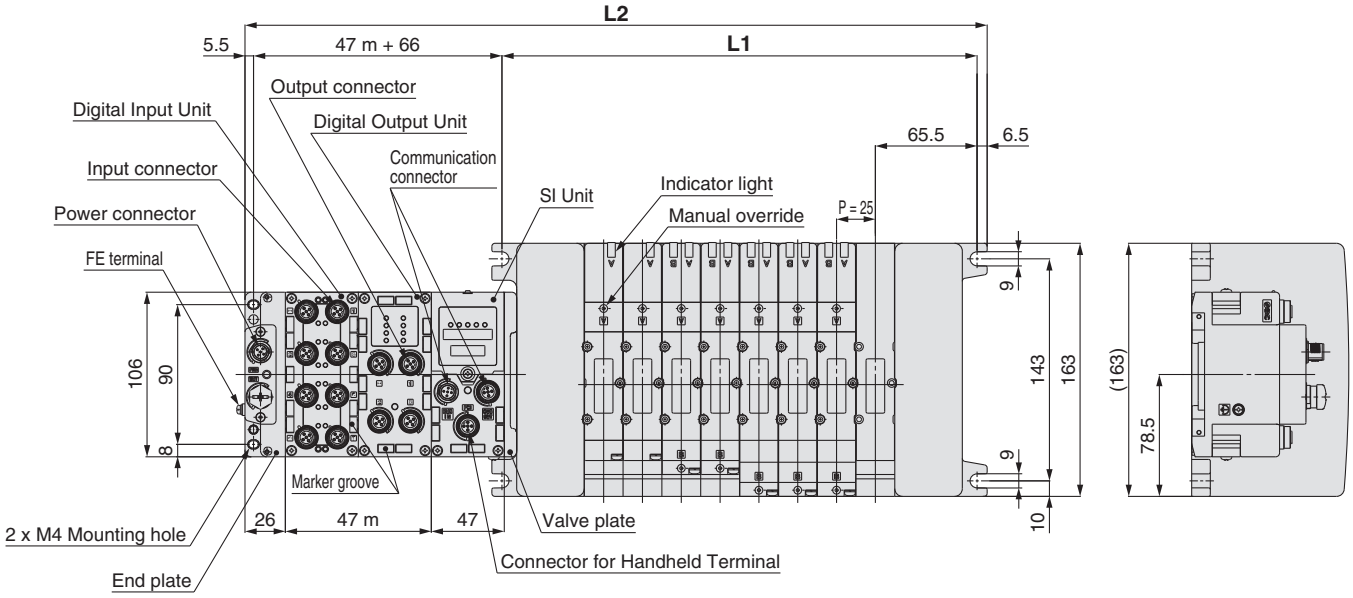

Dimensions [mm]

L \ n	1	2	3	4	5	6	7	8	9	10	11	12	13	14	15	16
L1	131	156	181	206	231	256	281	306	331	356	381	406	431	456	481	506
L2	209	234	259	284	309	334	359	384	409	434	459	484	509	534	559	584

Formula: L1 = 25n + 106, L2 = 25n + 184 ∗ L2 is the dimension without I/O Unit. Add 47 mm for each additional I/O Units. ∗ "m" is number of I/O Units. n: Stations (Maximum 16 stations)

S VQC4000

Kit (Serial transmission kit): For EX600 Integrated-type (I/O) Serial Transmission System IP67 compliant

VV5QC41
S kit (Serial transmission kit: EX600)
Power supply with 7/8 inch connector

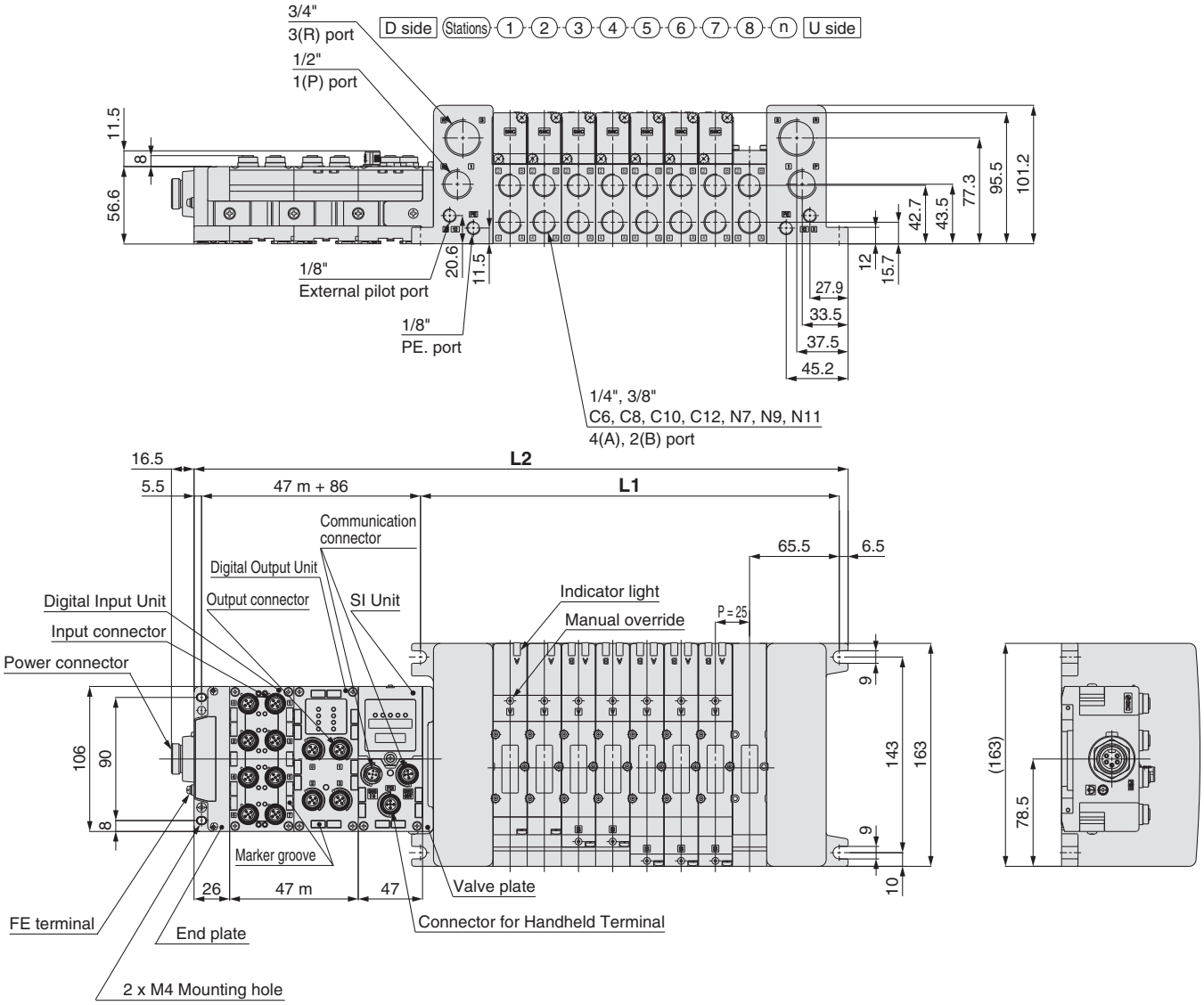

Dimensions

[mm]

L \ n	1	2	3	4	5	6	7	8	9	10	11	12	13	14	15	16
L1	131	156	181	206	231	256	281	306	331	356	381	406	431	456	481	506
L2	209	234	259	284	309	334	359	384	409	434	459	484	509	534	559	584

Formula: L1 = 25n + 106, L2 = 25n + 184 ∗ L2 is the dimension without I/O Unit. Add 47 mm for each additional I/O Units. ∗ "m" is number of I/O Units. n: Stations (Maximum 16 stations)

S VQC4000

Kit (Serial transmission kit): For EX500 Gateway-type Serial Transmission System IP67 compliant

VV5QC41
S kit (Serial transmission kit: EX500)

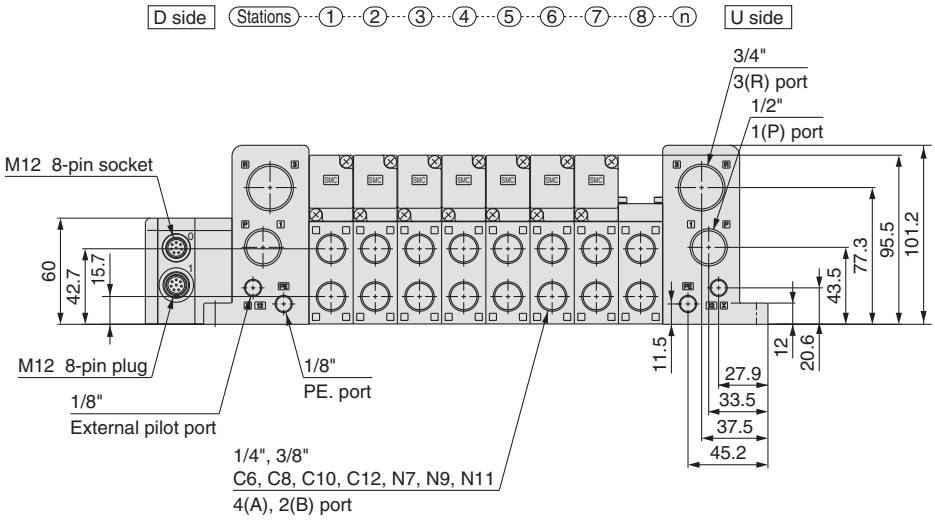

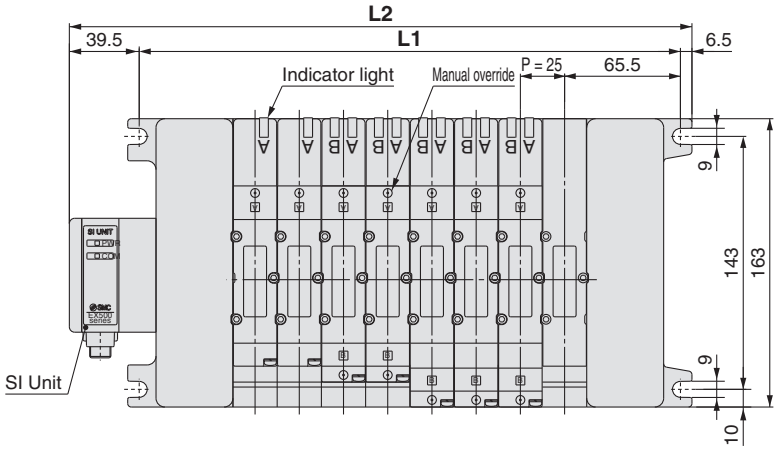

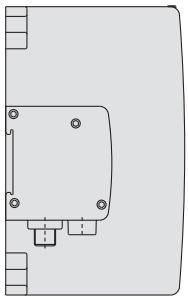

Dimensions [mm]

L \ n	1	2	3	4	5	6	7	8	9	10	11	12	13	14	15	16
L1	131	156	181	206	231	256	281	306	331	356	381	406	431	456	481	506
L2	177	202	227	252	277	302	327	352	377	402	427	452	477	502	527	552

Formula: L1 = 25n + 106, L2 = 25n + 152 n: Stations (Maximum 16 stations)

S VQC4000

IP40 compliant
IP67 compliant

Kit (Serial transmission kit): For EX260 Integrated-type (Output) Serial Transmission System

VV5QC41
S kit (Serial transmission kit: EX260)

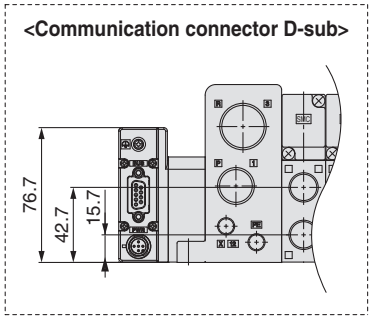

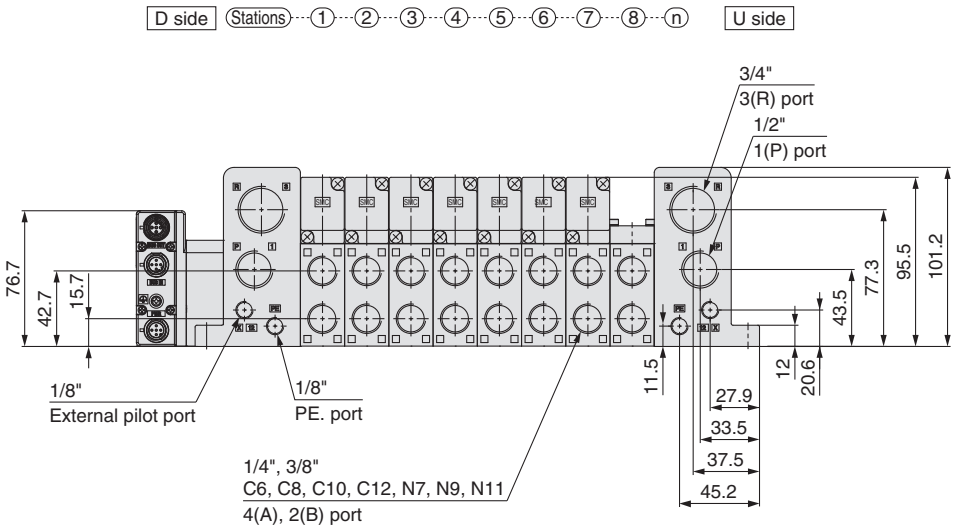

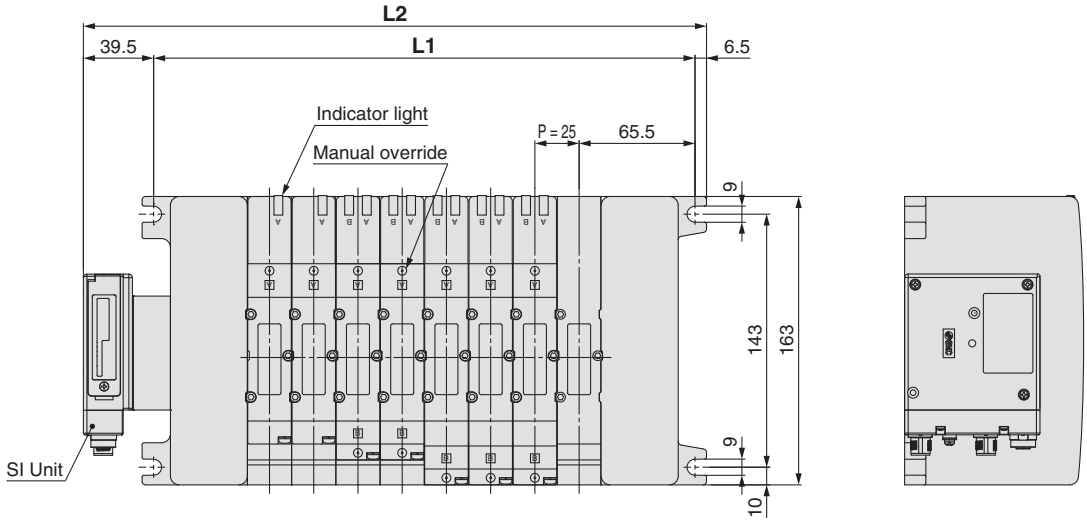

Dimensions

[mm]

L \ n	1	2	3	4	5	6	7	8	9	10	11	12	13	14	15	16
L1	131	156	181	206	231	256	281	306	331	356	381	406	431	456	481	506
L2	177	202	227	252	277	302	327	352	377	402	427	452	477	502	527	552

n: Stations (Maximum 16 stations)

S VQC4000

Kit (Serial transmission kit): For EX250 Integrated-type (I/O) Serial Transmission System IP67 compliant

VV5QC41
S kit
(Serial transmission kit: EX250)

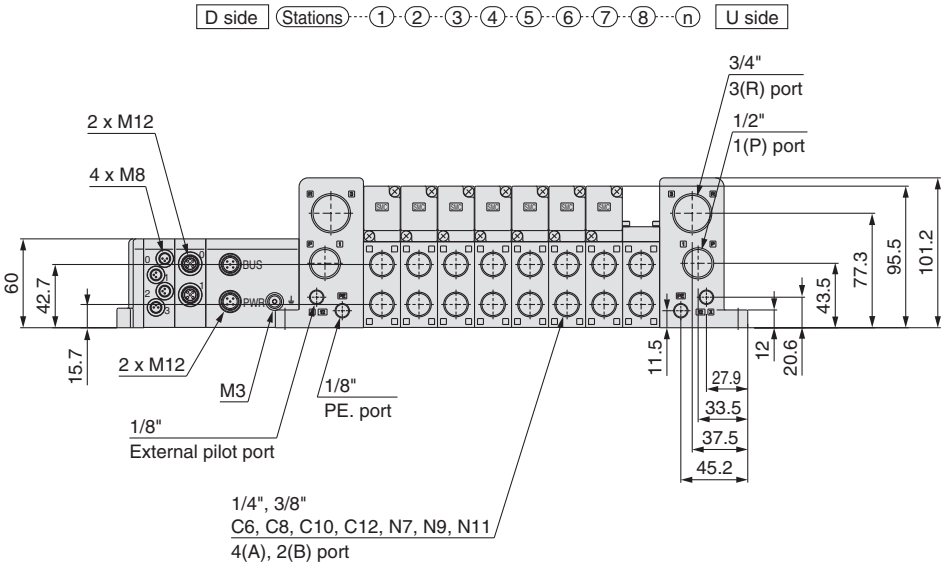

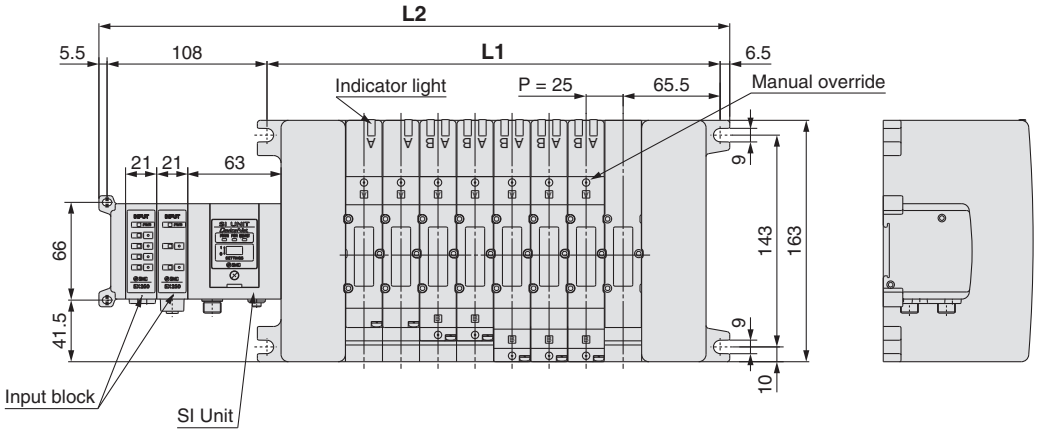

Dimensions [mm]

L \ n	1	2	3	4	5	6	7	8	9	10	11	12	13	14	15	16
L1	131	156	181	206	231	256	281	306	331	356	381	406	431	456	481	506
L2	230	255	280	305	330	355	380	405	430	455	480	505	530	555	580	605

Formula: L1 = 25n + 106, L2 = 25n + 205 (For one input block. Add 21 mm for each additional input block.) n: Stations (Maximum 16 stations)

S VQC4000

Kit (Serial transmission kit): For EX126 Integrated-type (Output) Serial Transmission System IP67 compliant

VV5QC41
S kit (Serial transmission kit: EX126)

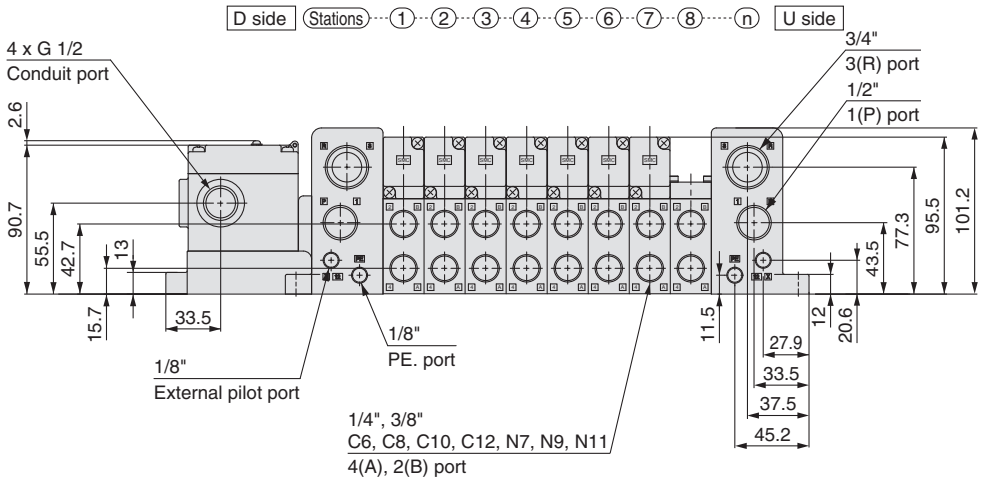

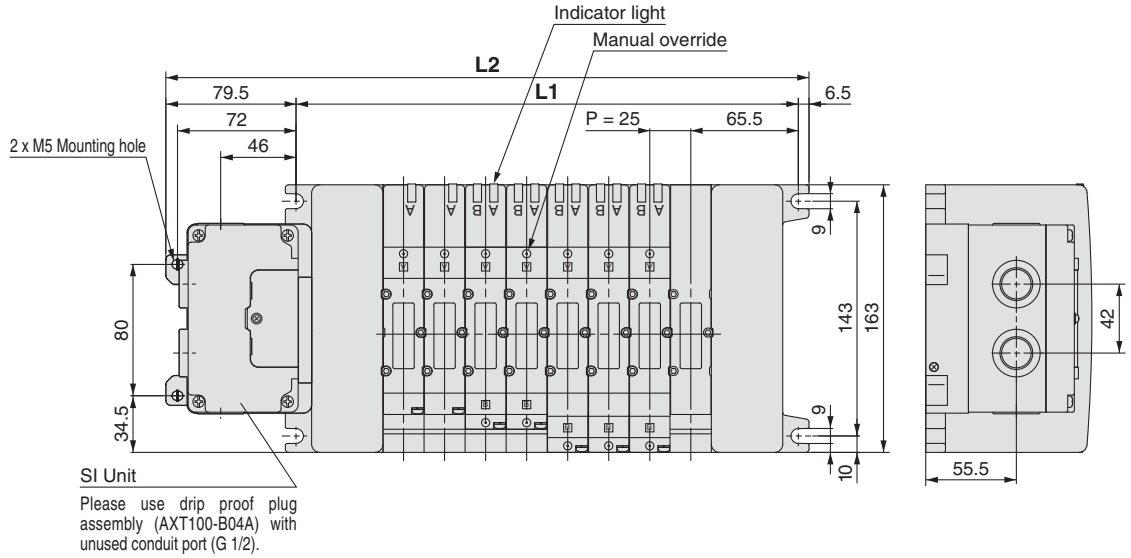

Dimensions

[mm]

L \ n	1	2	3	4	5	6	7	8	9	10	11	12	13	14	15	16
L1	131	156	181	206	231	256	281	306	331	356	381	406	431	456	481	506
L2	217	242	267	292	317	342	367	392	417	442	467	492	517	542	567	592

Formula: L1 = 25n + 106, L2 = 25n + 192 n: Stations (Maximum 16 stations)

F VQC4000

Kit (D-sub connector kit) IP40 compliant

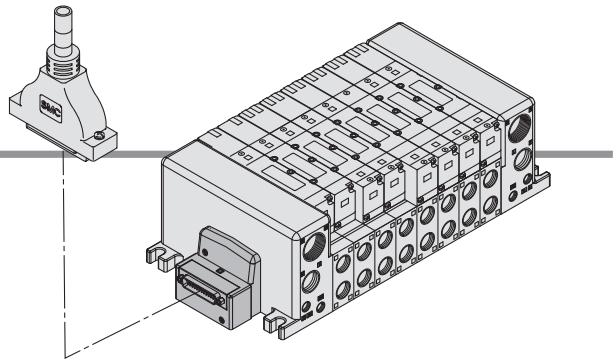

- **Using our D-sub connector for electrical connections greatly reduces labour, while it also minimises wiring and saves space.**
- **We use a D-sub connector (25P) that conforms to MIL standards and is therefore widely compatible with many standard commercial models.**
- **Top or side entry for the connector can be changed freely, allowing for changes even after mounting, to meet any changing needs for space.**

Electrical Wiring Specifications

D-sub connector

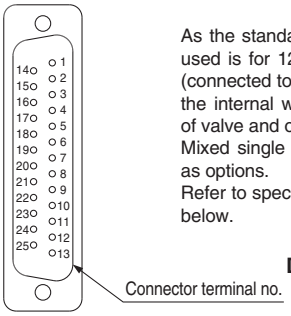

As the standard electrical wiring specification used is for 12 stations or less, double wiring (connected to SOL. A and SOL. B) is used for the internal wiring of each station regardless of valve and option types.
Mixed single and double wiring are available as options.
Refer to special wiring specifications (options) below.

Lead wire colours for D-sub connector assemblies (AXT100-DS25-015/030/050)

Standard wiring		Terminal no.	Lead wire colour	Dot marking
Station 1	SOL.A	1	Black	None
	SOL.B	14	Yellow	Black
Station 2	SOL.A	2	Brown	None
	SOL.B	15	Pink	Black
Station 3	SOL.A	3	Red	None
	SOL.B	16	Blue	White
Station 4	SOL.A	4	Orange	None
	SOL.B	17	Purple	None
Station 5	SOL.A	5	Yellow	None
	SOL.B	18	Grey	None
Station 6	SOL.A	6	Pink	None
	SOL.B	19	Orange	Black
Station 7	SOL.A	7	Blue	None
	SOL.B	20	Red	White
Station 8	SOL.A	8	Purple	White
	SOL.B	21	Brown	White
Station 9	SOL.A	9	Grey	Black
	SOL.B	22	Pink	Red
Station 10	SOL.A	10	White	Black
	SOL.B	23	Grey	Red
Station 11	SOL.A	11	White	Red
	SOL.B	24	Black	White
Station 12	SOL.A	12	Yellow	Red
	SOL.B	25	White	None
	COM.	13	Orange	Red

Special Wiring Specifications (Options)

(For 25P)

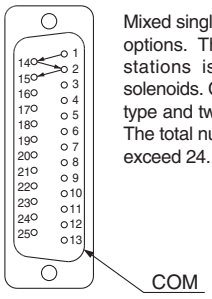

Mixed single and double wiring are available as options. The maximum number of manifold stations is determined by the number of solenoids. Count one point for a single solenoid type and two points for a double solenoid type. The total number of solenoids (points) must not exceed 24.

Cable Assembly

AXT100-DS25-015/030/050

(D-sub connector cable assemblies can be ordered with manifolds. Refer to manifold ordering.)

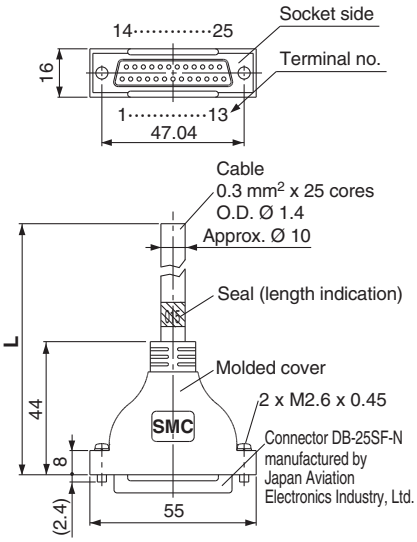

Lead wire colours for D-sub connector cable assembly terminal numbers

Terminal no.	Lead wire colour	Dot marking
1	Black	None
2	Brown	None
3	Red	None
4	Orange	None
5	Yellow	None
6	Pink	None
7	Blue	None
8	Purple	White
9	Grey	Black
10	White	Black
11	White	Red
12	Yellow	Red
13	Orange	Red
14	Yellow	Black
15	Pink	Black
16	Blue	White
17	Purple	None
18	Grey	None
19	Orange	Black
20	Red	White
21	Brown	White
22	Pink	Red
23	Grey	Red
24	Black	White
25	White	None

D-sub connector cable assemblies

Cable length (**L**)	Part no.	Note
1.5 m	AXT100-DS25-015	Cable 0.3 mm² x 25 cores
3 m	AXT100-DS25-030	
5 m	AXT100-DS25-050	

∗ When using a standard commercial connector, use a type 25P female connector conforming to MIL-C-24308.
∗ Cannot be used for transfer wiring.
∗ Lengths other than the above is also available. Please contact SMC for details.

Electrical characteristics

Item	Characteristic
Conductor resistance Ω/km, 20 °C	65 or less
Voltage limit V, 1 minute, AC	1000
Insulation resistance MΩ/km, 20 °C	5 or more

Note) The minimum bending radius for D-sub connector cables is 20 mm.

Connector Manufacturers Example

- Fujitsu, Ltd.
- Japan Aviation Electronics Industry, Ltd.
- J.S.T. Mfg. Co., Ltd.
- HIROSE ELECTRIC CO., LTD.

F VQC4000

Kit (D-sub connector kit) IP40 compliant

VV5QC41

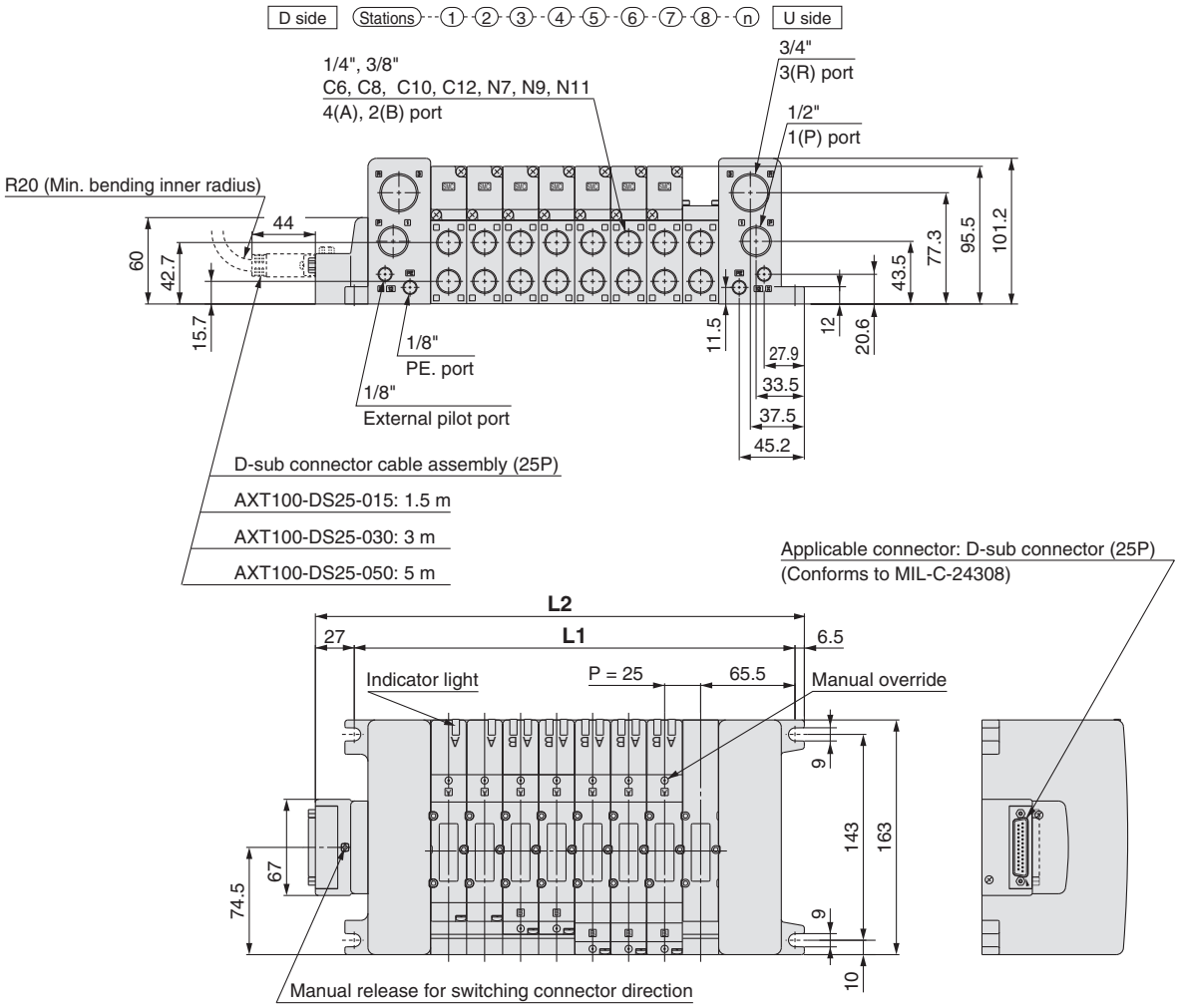

Dimensions

[mm]

L \ n	1	2	3	4	5	6	7	8	9	10	11	12	13	14	15	16
L1	131	156	181	206	231	256	281	306	331	356	381	406	431	456	481	506
L2	164.5	189.5	214.5	239.5	264.5	289.5	314.5	339.5	364.5	389.5	414.5	439.5	464.5	489.5	514.5	539.5

Formula: L1= 25n + 106, L2 = 25n + 139.5 n: Stations (Maximum 16 stations)

P VQC4000

Kit (Flat ribbon cable kit) IP40 compliant

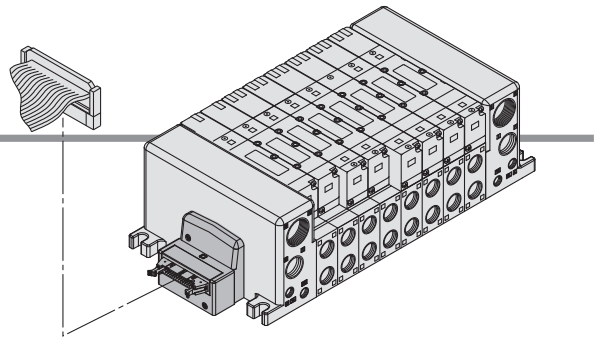

- **Using our flat ribbon cable for electrical connections greatly reduces labour, while it also minimises wiring and saves space.**
- **We use flat ribbon cables whose connectors (26P and 20P) conform to MIL standards, and are therefore widely compatible with many standard commercial models.**
- **Top or side entry for the connector can be changed freely, allowing for changes even after mounting, to meet any changing needs for space.**

Electrical Wiring Specifications

Flat ribbon cable connector

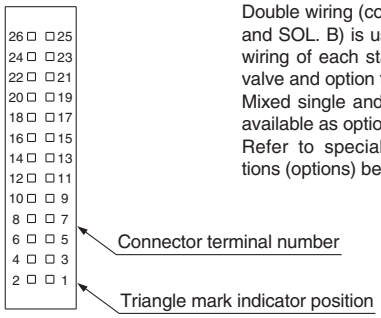

Double wiring (connected to SOL. A and SOL. B) is used for the internal wiring of each station regardless of valve and option types.
Mixed single and double wiring are available as options.
Refer to special wiring specifications (options) below.

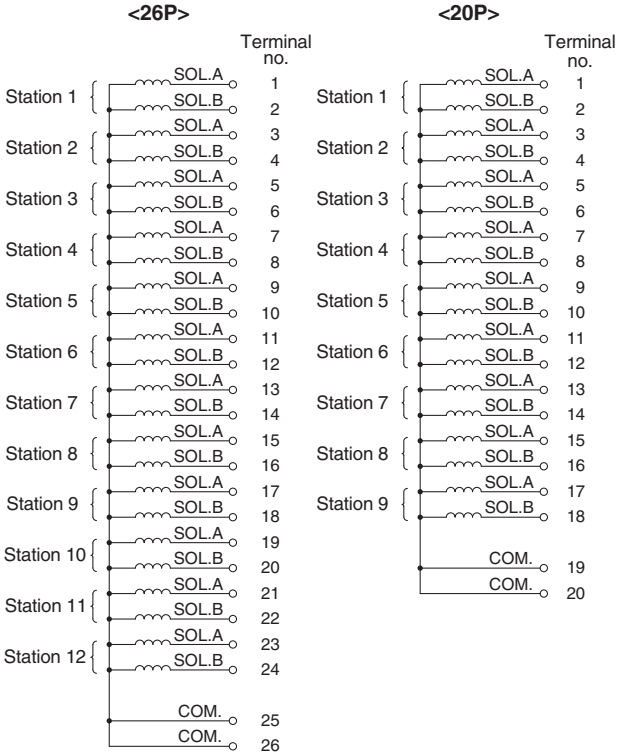

Cable Assembly

AXT100-FC 20/26 - 1/2/3

(Type 26P flat ribbon cable connector assemblies can be ordered with manifolds. Refer to manifold ordering.)

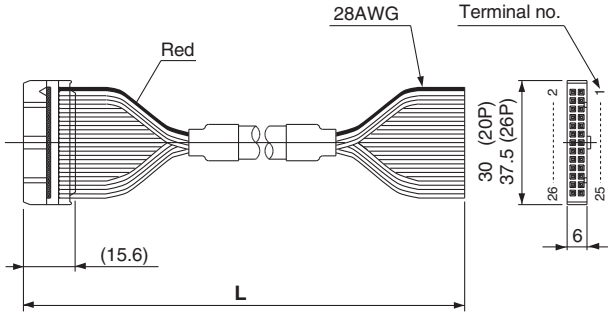

Flat ribbon cable connector assemblies

Cable length (L)	Part no.	
	26P	20P
1.5 m	AXT100-FC26-1	AXT100-FC20-1
3 m	AXT100-FC26-2	AXT100-FC20-2
5 m	AXT100-FC26-3	AXT100-FC20-3

∗ When using a standard commercial connector, use a type 26P connector conforming to MIL-C-83503 or a type 20P with strain relief.
∗ Cannot be used for transfer wiring.
∗ Lengths other than the above is also available. Please contact SMC for details.

Connector Manufacturers Example

- Hirose Electric Co., Ltd.
- Sumitomo/3M Limited
- Fujitsu, Ltd.
- Japan Aviation Electronics Industry, Ltd.
- J.S.T. Mfg. Co., Ltd.
- Oki Electric Cable Co., Ltd.

Special Wiring Specifications (Option)

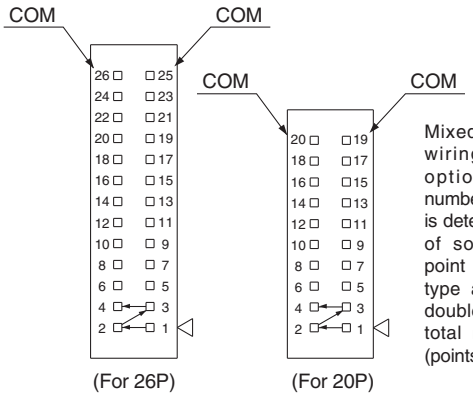

Mixed single and double wiring are available as options. The maximum number of manifold stations is determined by the number of solenoids. Count one point for a single solenoid type and two points for a double solenoid type. The total number of solenoids (points) must not exceed 24.

P VQC4000

Kit (Flat ribbon cable kit) IP40 compliant

VV5QC41

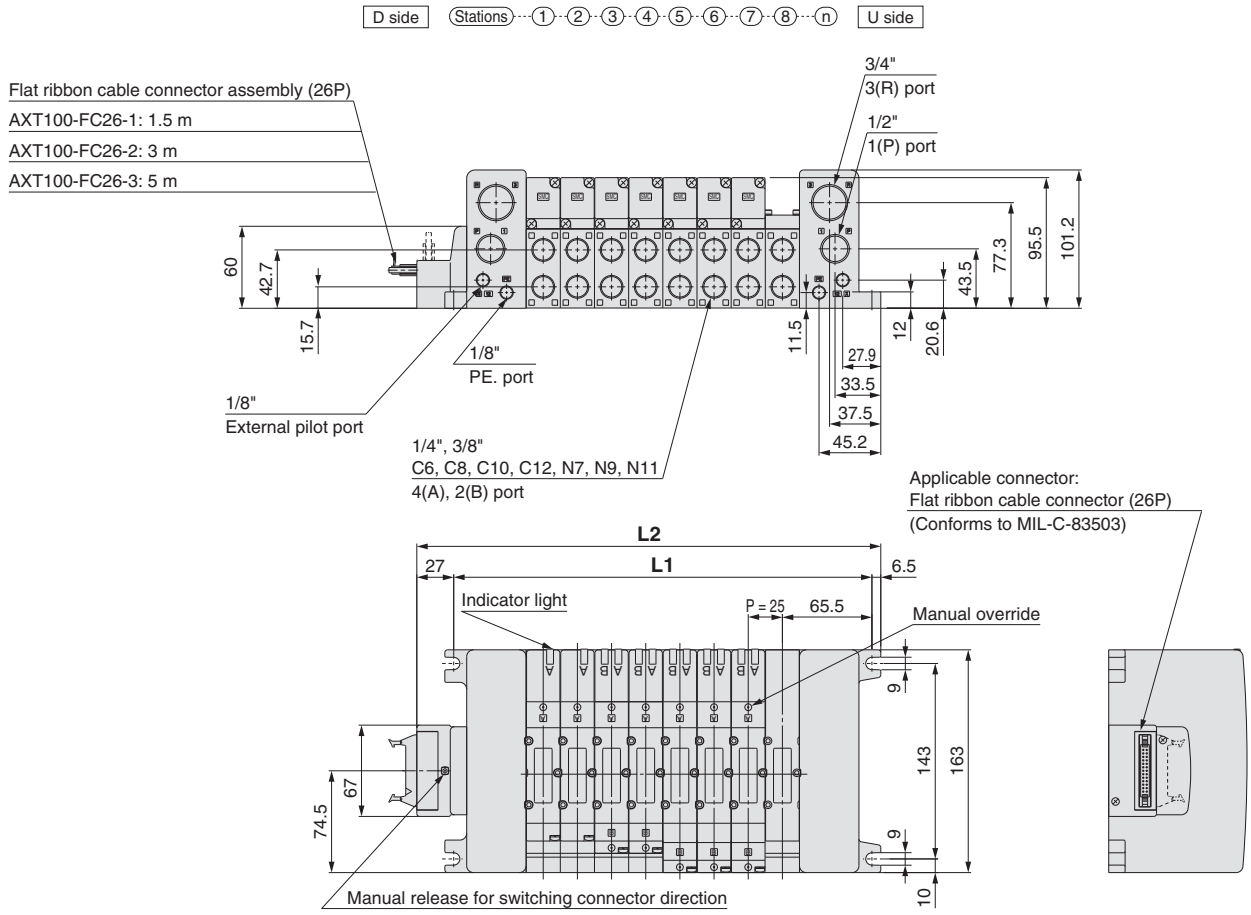

Dimensions

[mm]

L \ n	1	2	3	4	5	6	7	8	9	10	11	12	13	14	15	16
L1	131	156	181	206	231	256	281	306	331	356	381	406	431	456	481	506
L2	164.5	189.5	214.5	239.5	264.5	289.5	314.5	339.5	364.5	389.5	414.5	439.5	464.5	489.5	514.5	539.5

Formula: L1 = 25n + 106, L2 = 25n + 139.5 n: Stations (Maximum 16 stations)

T VQC4000

Kit (Terminal block box kit) IP67 compliant

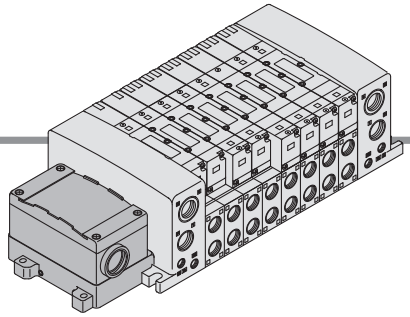

- **This kit has a small terminal block inside a junction box. The provision of a G 3/4 electrical entry allows connection of conduit fittings.**

Terminal Block Connection

Step 1. How to remove terminal block cover
Loosen the 4 mounting screws (M4) and remove the terminal block cover.

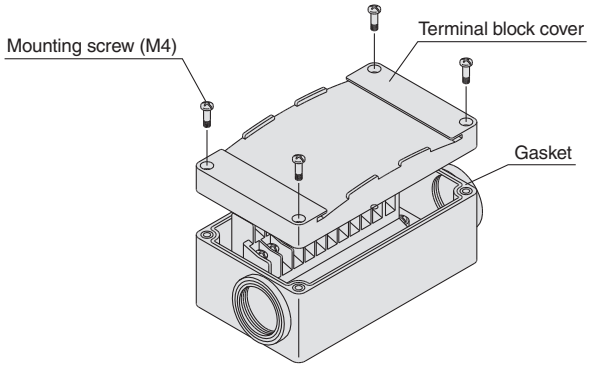

Step 2. The diagram below shows the terminal block wiring. All stations are provided with double wiring regardless of the valves which are mounted.
Connect each wire to the power supply side, according to the markings provided inside the terminal block.

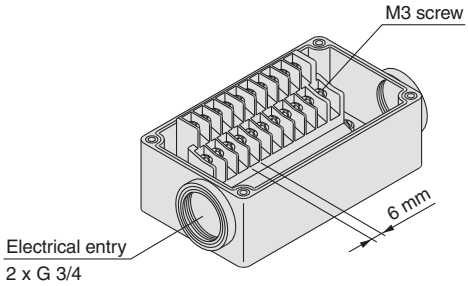

Step 3. How to replace the terminal block cover
Securely tighten the screws to the torque shown in the table below, after confirming that the gasket is installed correctly.

Proper tightening torque [N·m]
0.7 to 1.2

- Applicable crimped terminal: 1.25-3S,1.25Y-3,1.25Y-3N,1.25Y-3.5
- Name plate: VVQ5000-N-T
- Drip proof plug assembly (for G 3/4): AXT100-B06A

Electrical Wiring Specifications (Conforms to IP67)

Standard wiring

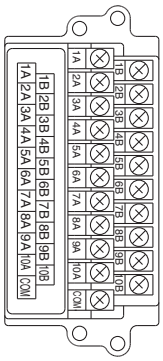

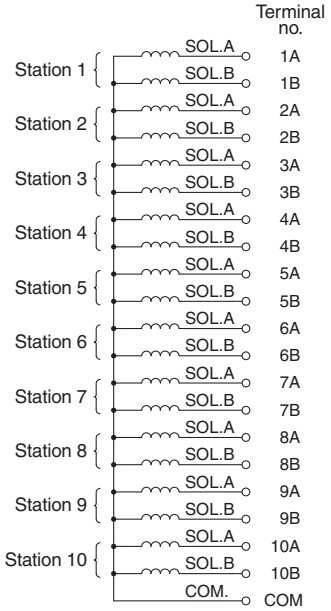

The internal wiring is double (connected to SOL. A and SOL. B) for all stations regardless of the type of valve or options.
Mixed single and double wiring are available as options.

Special Wiring Specifications (Option)

Mixed single and double wiring are available as options. The maximum number of manifold stations is determined by the number of solenoids. Count one point for a single solenoid type and two points for a double solenoid type. The total number of solenoids (points) must not exceed 20.

1. How to Order
Indicate option symbol "-K" in the manifold part number and be sure to specify station positions for single or double wiring on the manifold specification sheet.

2. Wiring specifications
Connector terminal numbers are connected from solenoid station 1 on the A side in the order indicated by the arrows without skipping any terminal numbers.

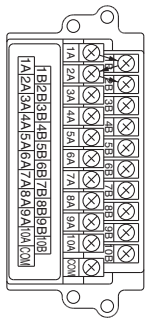

T VQC4000

Kit (Terminal block box kit) IP67 compliant

VV5QC41

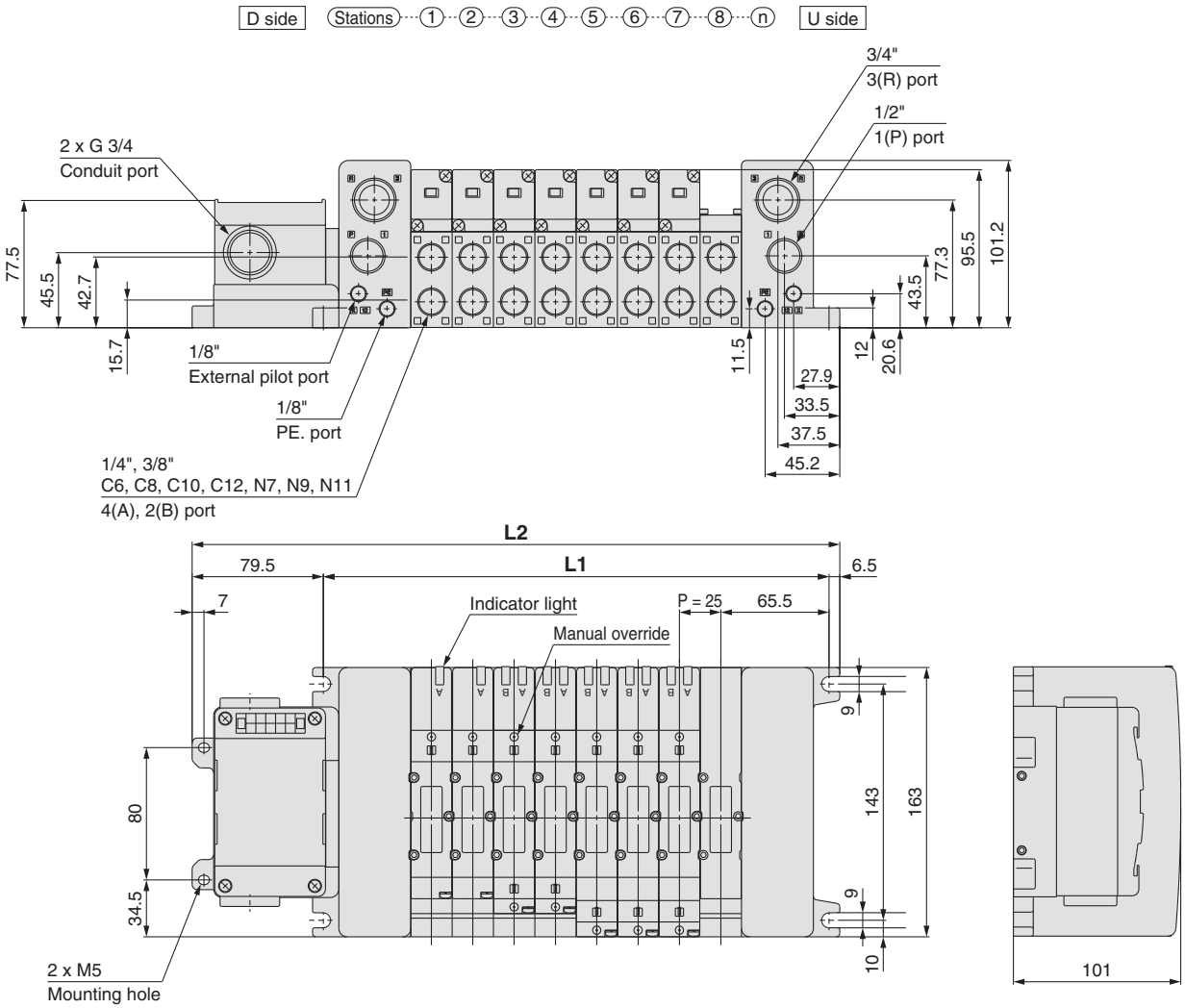

Dimensions

[mm]

L \ n	1	2	3	4	5	6	7	8	9	10	11	12	13	14	15	16
L1	131	156	181	206	231	256	281	306	331	356	381	406	431	456	481	506
L2	217	242	267	292	317	342	367	392	417	442	467	492	517	542	567	592

Formula: L1 = 25n + 106, L2 = 25n + 192 n: Stations (Maximum 16 stations)

L VQC4000

Kit (Lead wire kit) IP67 compliant

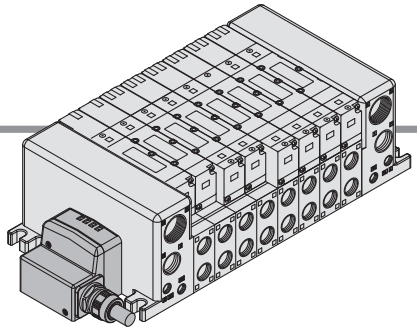

- **Direct electrical entry type**
- **IP67 enclosure is available with use of cables with sheath and waterproof connectors.**

Electrical Wiring Specifications

Lead wire specifications

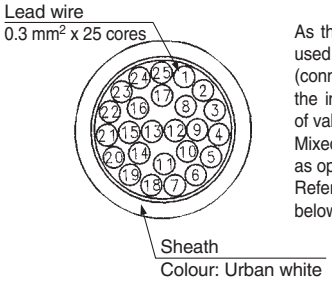

As the standard electrical wiring specification used is for 12 stations or less, double wiring (connected to SOL. A and SOL. B) is used for the internal wiring of each station regardless of valve and option types.
Mixed single and double wiring are available as options.
Refer to special wiring specifications (options) below.

		Terminal no.	Lead wire colour	Dot marking
Station 1	SOL.A	1	Black	None
	SOL.B	14	Yellow	Black
Station 2	SOL.A	2	Brown	None
	SOL.B	15	Pink	Black
Station 3	SOL.A	3	Red	None
	SOL.B	16	Blue	White
Station 4	SOL.A	4	Orange	None
	SOL.B	17	Purple	None
Station 5	SOL.A	5	Yellow	None
	SOL.B	18	Grey	None
Station 6	SOL.A	6	Pink	None
	SOL.B	19	Orange	Black
Station 7	SOL.A	7	Blue	None
	SOL.B	20	Red	White
Station 8	SOL.A	8	Purple	White
	SOL.B	21	Brown	White
Station 9	SOL.A	9	Grey	Black
	SOL.B	22	Pink	Red
Station 10	SOL.A	10	White	Black
	SOL.B	23	Grey	Red
Station 11	SOL.A	11	White	Red
	SOL.B	24	Black	White
Station 12	SOL.A	12	Yellow	Red
	SOL.B	25	White	None
	COM.	13	Orange	Red

Lead wire length

VV5QC41−08 C12 LD 0

Lead wire length

0	0.6 m
1	1.5 m
2	3.0 m

Electrical characteristics

Item	Characteristic
Conductor resistance Ω/km, 20 °C	65 or less
Withstand pressure V, 1 minute, AC	1000
Insulation resistance MΩ/km, 20 °C	5 or more

Note) Cannot be used for transfer wiring.
The minimum bending radius for cables is 20 mm.

Special Wiring Specifications (Option)

Mixed single and double wiring are available as options. The maximum number of manifold stations is determined by the number of solenoids. Count one point for a single solenoid type and two points for a double solenoid type. The total number of solenoids (points) must not exceed 24.

L VQC4000

Kit (Lead wire kit) IP67 compliant

VV5QC41

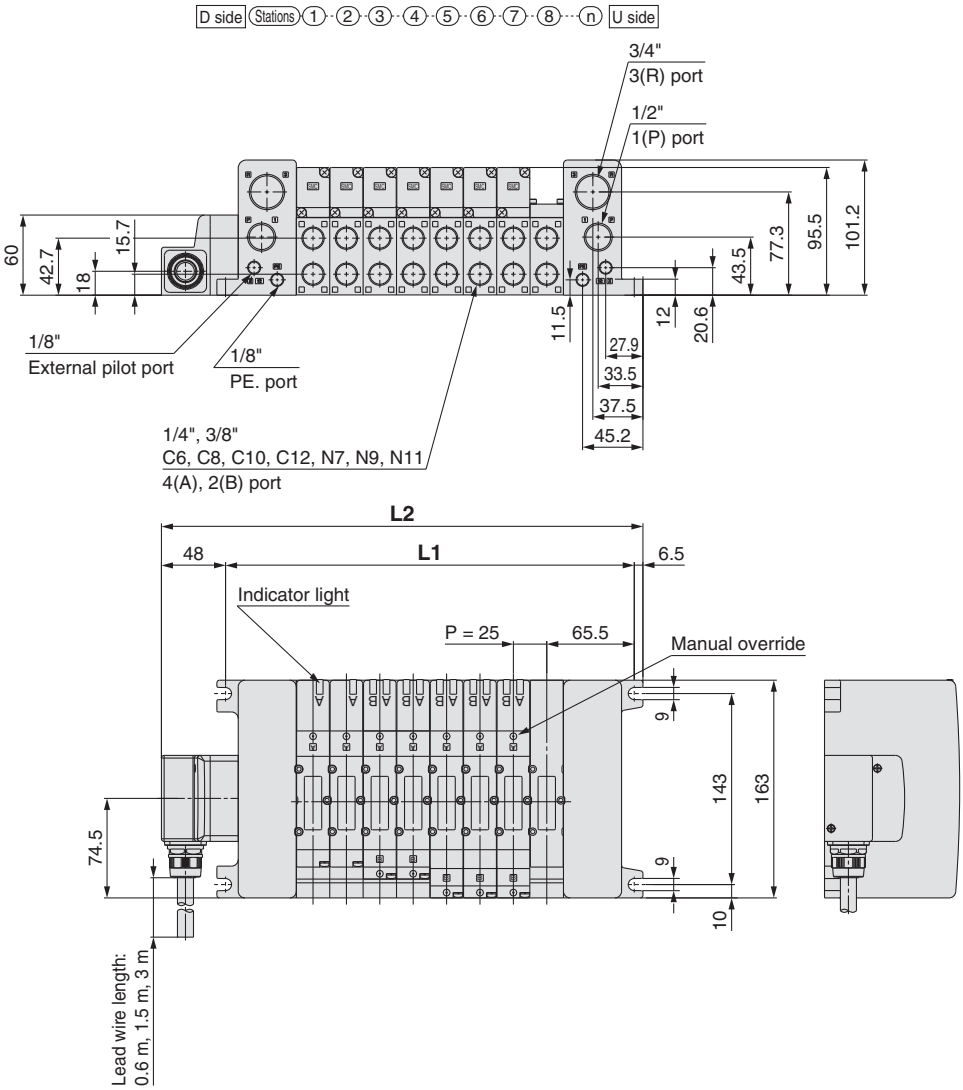

Dimensions

[mm]

L \ n	1	2	3	4	5	6	7	8	9	10	11	12	13	14	15	16
L1	131	156	181	206	231	256	281	306	331	356	381	406	431	456	481	506
L2	185.5	210.5	235.5	260.5	285.5	310.5	335.5	360.5	385.5	410.5	435.5	460.5	485.5	510.5	535.5	560.5

Formula: L1 = 25n + 106, L2 = 25n + 160.5 n: Stations (Maximum 16 stations)

M VQC4000

Kit (Circular connector kit) IP67 compliant

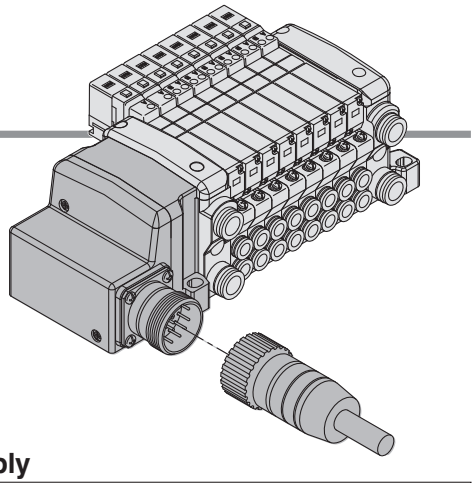

- **Use of circular connectors helps streamline wiring procedure to save labour.**
- **IP67 enclosure is available with use of waterproof multiple connectors.**

Electrical Wiring Specifications

Multiple connector

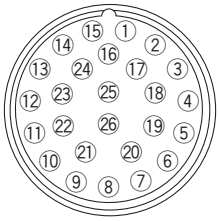

Double wiring (connected to SOL.A and SOL.B) is used for the internal wiring of each station regardless of valve and option types. Mixed single and double wiring are available as options. Refer to special wiring specifications (options) below.

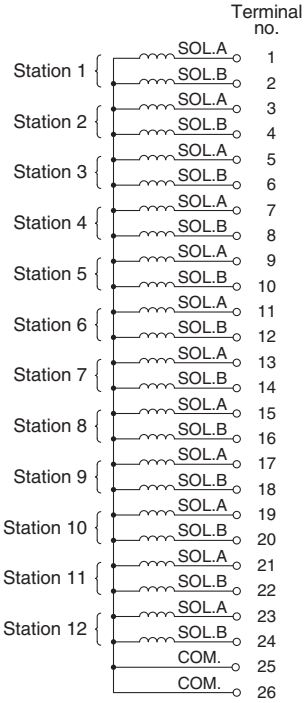

Special Wiring Specifications (Option)

Mixed single and double wiring are available as an option. The maximum number of manifold stations is determined by the number of solenoids. Count one point for a single solenoid type and two points for a double solenoid type. The total number of solenoids (points) must not exceed 24.

Cable Assembly

AXT100-MC26-015 / 030 / 050

(Type 26P circular connector cable assemblies can be ordered with manifolds. Refer to manifolds ordering.)

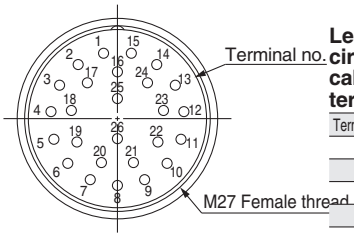

Lead wire colours for circular connector cable assembly terminal numbers

Terminal no.	Lead wire colour	Dot marking
1	Black	None
2	Brown	None
3	Red	None
4	Orange	None
5	Yellow	None
6	Pink	None
7	Blue	None
8	Purple	White
9	Grey	Black
10	White	Black
11	White	Red
12	Yellow	Red
13	Orange	Red
14	Yellow	Black
15	Pink	Black
16	Blue	White
17	Purple	None
18	Grey	None
19	Orange	Black
20	Red	White
21	Brown	White
22	Pink	Red
23	Grey	Red
24	Black	White
25	White	None
26	White	None

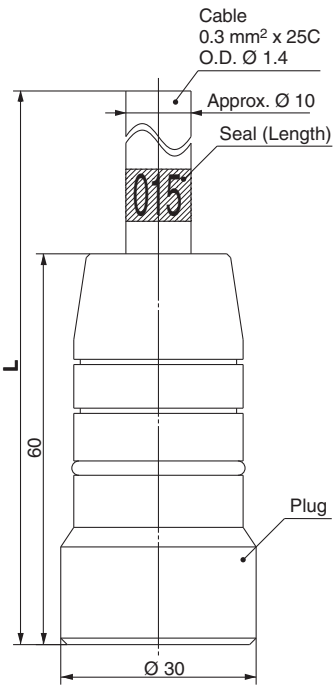

Electric characteristics

Item	Property
Conductor resistance Ω/km, 20 °C	65 or less
Voltage limit V, 1 minute, AC	1000
Insulation resistance MΩ/km, 20 °C	5 or more

Note) The minimum bending radius of the multiple connector cable is 20 mm.

Circular connector cable assemblies

Cable length (L)	Assembly part no.
	26P
1.5 m	AXT100-MC26-015
3 m	AXT100-MC26-030
5 m	AXT100-MC26-050

∗ Cannot be used for transfer wiring.
∗ Lengths other than the above is also available. Please contact SMC for details.

M VQC4000

Kit (Circular connector kit) IP67 compliant

VV5QC41

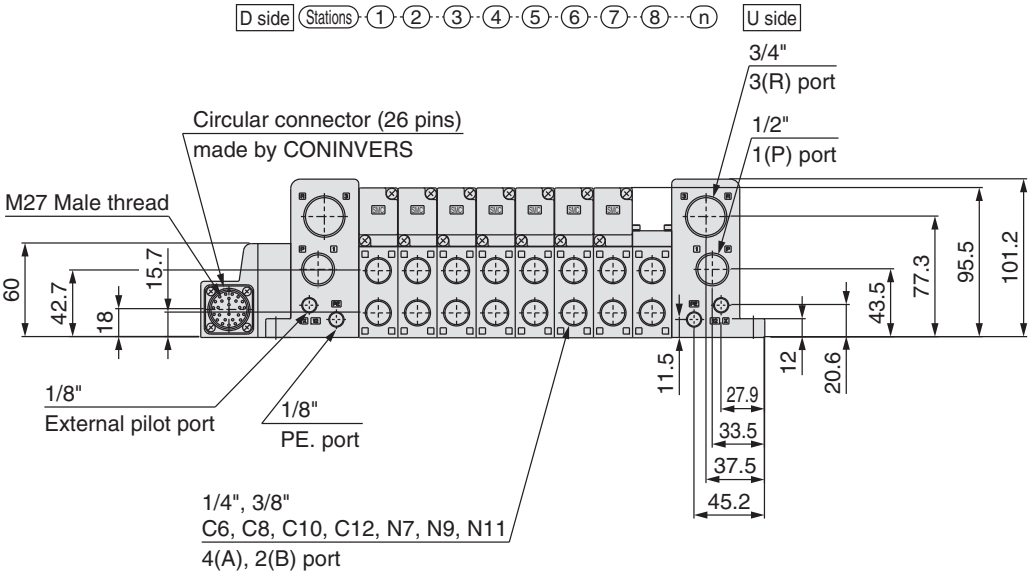

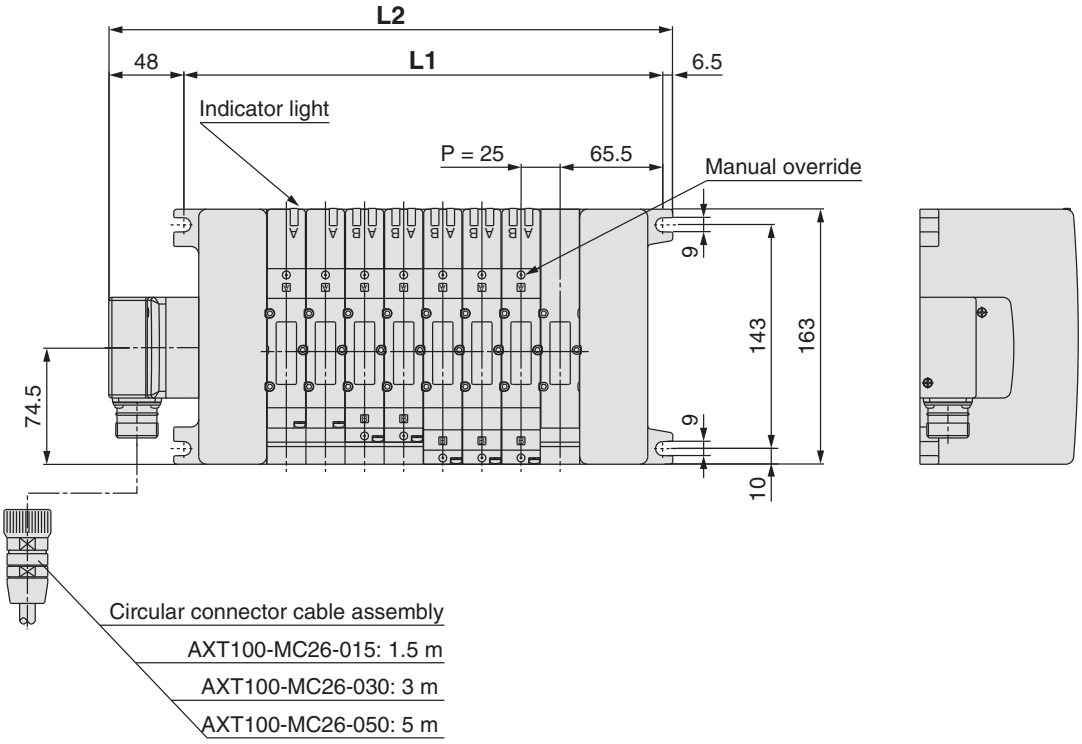

Dimensions [mm]

L \ n	1	2	3	4	5	6	7	8	9	10	11	12	13	14	15	16
L1	131	156	181	206	231	256	281	306	331	356	381	406	431	456	481	506
L2	185.5	210.5	235.5	260.5	285.5	310.5	335.5	360.5	385.5	410.5	435.5	460.5	485.5	510.5	535.5	560.5

Formula: L1 = 25n + 106, L2 = 25n +150.5 n: Stations (Maximum 16 stations)

Construction

Plug-in Unit

Metal seal type

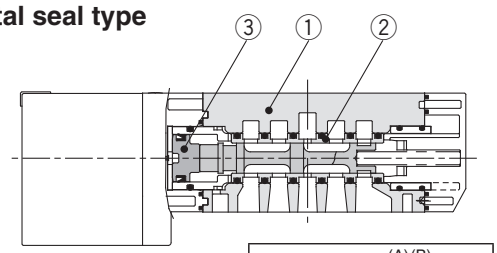

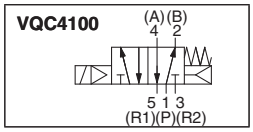

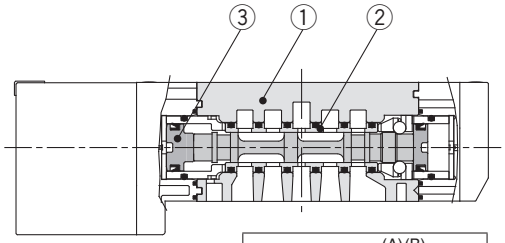

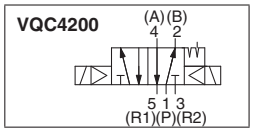

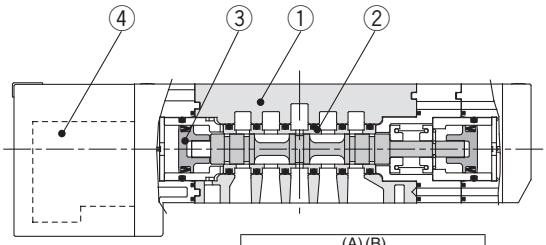

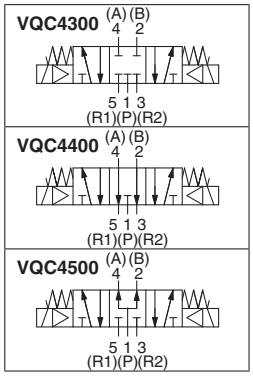

Component Parts

No.	Description	Material	Note
1	Body	Aluminium die-casted	
2	Spool/Sleeve	Stainless steel	
3	Piston	Resin	

Replacement Parts

4	Pilot valve assembly	V118□-□ (A / B / E) Coil type — Standard (0.95 W) Y Low wattage type (0.4 W)	□: Coil rated voltage Example) 24 V DC: 5 A: Single/With light B: Double, 3-position/With light E: Single, Double, 3-position/ Without light

Rubber seal type

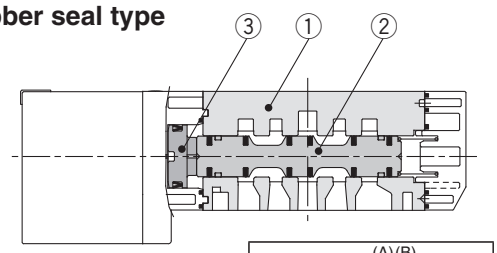

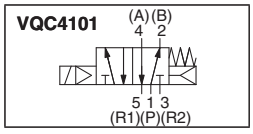

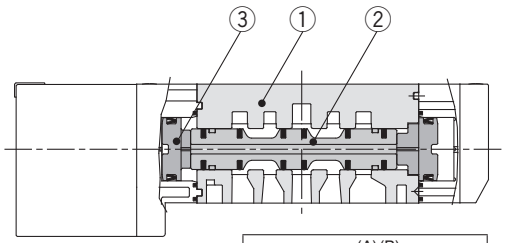

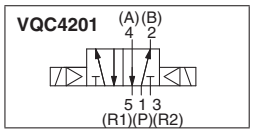

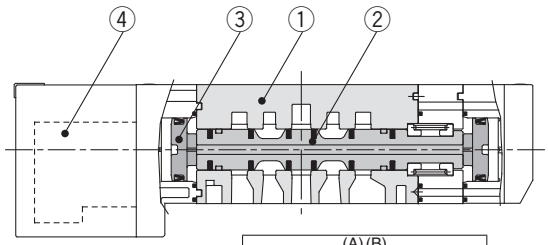

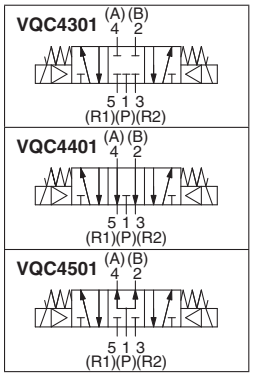

Component Parts

No.	Description	Material	Note
1	Body	Aluminium die-casted	
2	Spool valve	Aluminium, HNBR	
3	Piston	Resin	

Replacement Parts

4	Pilot valve assembly	V118□-□ (A / B / E) Coil type — Standard (0.95 W) Y Low wattage type (0.4 W)	□: Coil rated voltage Example) 24 V DC: 5 A: Single/With light B: Double, 3-position/With light E: Single, Double, 3-position/ Without light

Exploded View of Manifold

	Housing assembly and SI Unit	D-side end plate assembly	Manifold block assembly	U-side end plate assembly
S Kit (Serial) EX600	②, ④, ①, ③			
S Kit (Serial) EX500	⑤			
S Kit (Serial) EX260	⑥	Kit corrispondente S(EX600, EX250, EX126), F, P, T		
S Kit (Serial) EX250	⑦, ⑧, ⑨	⑰		⑳
S Kit (Serial) EX126	⑩, ⑪		⑱	
F Kit (D-sub connector)	⑫			
P Kit (Flat ribbon cable)	⑬		⑱, ⑲	
T Kit (Terminal block)	⑭	⑰		
L Kit (Lead wire)	⑮	Kit corrispondente S(EX500, EX260), L, M		
M Kit (Circular connector)	⑯			

Note) There are two kinds of manifold blocks available, 2 stations integrated type and 1 station type. 2 stations integrated type is used for even stations while 2 stations integrated type and 1 station type are combined for odd stations.

D side ····· U side

1·····2·····3·····4·····5·····6·····

5 stations (Odd number)	2 stations	2 stations	1 station
6 stations (Even number)	2 stations	2 stations	2 stations

Manifold Assembly Part No.

Housing Assembly and SI Unit/Input Block

No.	Description	Part no.	Note
1	SI Unit	EX600-SDN1A	DeviceNet™, Negative common (PNP)
		EX600-SDN2A	DeviceNet™, Positive common (NPN)
		EX600-SMJ1	CC-Link, Negative common (PNP)
		EX600-SMJ2	CC-Link, Positive common (NPN)
		EX600-SPR1A	PROFIBUS DP, Negative common (PNP)
		EX600-SPR2A	PROFIBUS DP, Positive common (NPN)
		EX600-SEN1	EtherNet/IP™ (1 port), Negative common (PNP)
		EX600-SEN2	EtherNet/IP™ (1 port), Positive common (NPN)
		EX600-SEN3	EtherNet/IP™ (2 port), Negative common (PNP)
		EX600-SEN4	EtherNet/IP™ (2 port), Positive common (NPN)
		EX600-SEC1	EtherCAT®, Negative common (PNP)
		EX600-SEC2	EtherCAT®, Positive common (NPN)
		EX600-SPN1	PROFINET, Negative common (PNP)
		EX600-SPN2	PROFINET, Positive common (NPN)
		EX600-WEN1 Note)	Base module EtherNet/IP™, Negative common (PNP)
		EX600-WEN2 Note)	Base module EtherNet/IP™, Positive common (NPN))
		EX600-WPN1 Note)	Base module PROFINET, Negative common (PNP)
		EX600-WPN2 Note)	Base module PROFINET, Positive common (NPN)
		EX600-WSV1 Note)	Remote module, Negative common (PNP)
		EX600-WSV2 Note)	Remote module, Positive common (NPN)
2	Digital Input Unit	EX600-DXNB	NPN input, M12 connector, 5 pins (4 pcs.), 8 inputs
		EX600-DXPB	PNP input, M12 connector, 5 pins (4 pcs.), 8 inputs
		EX600-DXNC	NPN input, M8 connector, 3 pins (8 pcs.), 8 inputs
		EX600-DXNC1	NPN input, M8 connector, 3 pins (8 pcs.), 8 inputs, with open circuit detection
		EX600-DXPC	PNP input, M8 connector, 3 pins (8 pcs.), 8 inputs
		EX600-DXPC1	PNP input, M8 connector, 3 pins (8 pcs.), 8 inputs, with open circuit detection
		EX600-DXND	NPN input, M12 connector, 5 pins (8 pcs.), 16 inputs
		EX600-DXPD	PNP input, M12 connector, 5 pins (8 pcs.), 16 inputs
		EX600-DXNE	NPN input, D-sub connector, 25 pins, 16 inputs
		EX600-DXPE	PNP input, D-sub connector, 25 pins, 16 inputs
		EX600-DXNF	NPN input, Spring type terminal box, 32 pins, 16 inputs
		EX600-DXPF	PNP input, Spring type terminal box, 32 pins, 16 inputs
	Digital Output Unit	EX600-DYNB	NPN output, M12 connector, 5 pins (4 pcs.), 8 outputs
		EX600-DYPB	PNP output, M12 connector, 5 pins (4 pcs.), 8 outputs
		EX600-DYNE	NPN output, D-sub connector, 25 pins, 16 outputs
		EX600-DYPE	PNP output, D-sub connector, 25 pins, 16 outputs
		EX600-DYNF	NPN output, Spring type terminal box, 32 pins, 16 outputs
		EX600-DYPF	PNP output, Spring type terminal box, 32 pins, 16 outputs
	Digital Input/Output Unit	EX600-DMNE	NPN input/output, D-sub connector, 25 pins, 8 inputs/outputs
		EX600-DMPE	PNP input/output, D-sub connector, 25 pins, 8 inputs/outputs
		EX600-DMNF	NPN input/output, Spring type terminal box, 32 pins, 8 inputs/outputs
		EX600-DMPF	PNP input/output, Spring type terminal box, 32 pins, 8 inputs/outputs
	Analogue Input Unit	EX600-AXA	M12 connector, 5 pins (2 pcs.), 2-channel input
	Analogue Output Unit	EX600-AYA	M12 connector, 5 pins (2 pcs.), 2-channel output
	Analogue Input/Output Unit	EX600-AMB	M12 connector, 5 pins (4 pcs.), 2-channel input/output
3	End plate	EX600-ED2	M12 connector, 5 pins, Max. supply current 2 A
		EX600-ED2-2	M12 connector, 5 pins, Max. supply current 2 A, with DIN rail mounting bracket
		EX600-ED3	7/8 inch connector, 5 pins, Max. supply current 8 A
		EX600-ED3-2	7/8 inch connector, 5 pins, Max. supply current 8 A, with DIN rail mounting bracket
		EX600-ED4	M12 connector, (4 pins/5 pins) IN/OUT
		EX600-ED4-2	M12 connector, (4 pins/5 pins) IN/OUT, with DIN rail mounting bracket
		EX600-ED5	M12 connector, (4 pins/5 pins) IN/OUT
		EX600-ED5-2	M12 connector, (4 pins/5 pins) IN/OUT, with DIN rail mounting bracket
4	Valve plate	EX600-ZMV1	Enclosed parts: Round head screws (M4 x 6) 2 pcs., Round head screws (M3 x 8) 4 pcs.
5	SI Unit	EX500-S103	EtherNet/IP™, PROFINET, Negative common (PNP)
		EX500-Q001	DeviceNet™, PROFIBUS DP, EtherNet/IP™, Positive common (NPN)
		EX500-Q101	DeviceNet™, PROFIBUS DP, EtherNet/IP™, Negative common (PNP)

Note) The wireless system is suitable for use only in a country where it is in accordance with the Radio Act and regulations of that country.

Manifold Assembly Part No.

Housing Assembly and SI Unit/Input Block

No.	Description	Part no.	Note
6	SI Unit	**EX260-SDN1**	DeviceNet™, M12 connector, 32 outputs, Negative common (PNP)
		EX260-SDN2	DeviceNet™, M12 connector, 32 outputs, Positive common (NPN)
		EX260-SDN3	DeviceNet™, M12 connector, 16 outputs, Negative common (PNP)
		EX260-SDN4	DeviceNet™, M12 connector, 16 outputs, Positive common (NPN)
		EX260-SRP1	PROFIBUS DP, M12 connector, 32 outputs, Negative common (PNP)
		EX260-SRP2	PROFIBUS DP, M12 connector, 32 outputs, Positive common (NPN)
		EX260-SRP3	PROFIBUS DP, M12 connector, 16 outputs, Negative common (PNP)
		EX260-SRP4	PROFIBUS DP, M12 connector, 16 outputs, Positive common (NPN)
		EX260-SRP5	PROFIBUS DP, D-sub connector, 32 outputs, Negative common (PNP)
		EX260-SRP6	PROFIBUS DP, D-sub connector, 32 outputs, Positive common (NPN)
		EX260-SRP7	PROFIBUS DP, D-sub connector, 16 outputs, Negative common (PNP)
		EX260-SRP8	PROFIBUS DP, D-sub connector, 16 outputs, Positive common (NPN)
		EX260-SMJ1	CC-Link, M12 connector, 32 outputs, Negative common (PNP)
		EX260-SMJ2	CC-Link, M12 connector, 32 outputs, Positive common (NPN)
		EX260-SMJ3	CC-Link, M12 connector, 16 outputs, Negative common (PNP)
		EX260-SMJ4	CC-Link, M12 connector, 16 outputs, Positive common (NPN)
		EX260-SEC1	EtherCAT®, M12 connector, 32 outputs, Negative common (PNP)
		EX260-SEC2	EtherCAT®, M12 connector, 32 outputs, Positive common (NPN)
		EX260-SEC3	EtherCAT®, M12 connector, 16 outputs, Negative common (PNP)
		EX260-SEC4	EtherCAT®, M12 connector, 16 outputs, Positive common (NPN)
		EX260-SPN1	PROFINET, M12 connector, 32 outputs, Negative common (PNP)
		EX260-SPN2	PROFINET, M12 connector, 32 outputs, Positive common (NPN)
		EX260-SPN3	PROFINET, M12 connector, 16 outputs, Negative common (PNP)
		EX260-SPN4	PROFINET, M12 connector, 16 outputs, Positive common (NPN)
		EX260-SEN1	EtherNet/IP™, M12 connector, 32 outputs, Negative common (PNP)
		EX260-SEN2	EtherNet/IP™, M12 connector, 32 outputs, Positive common (NPN)
		EX260-SEN3	EtherNet/IP™, M12 connector, 16 outputs, Negative common (PNP)
		EX260-SEN4	EtherNet/IP™, M12 connector, 16 outputs, Positive common (NPN)
		EX260-SPL1	EtherNet POWERLINK, M12 connector, 32 outputs, Negative common (PNP)
		EX260-SPL3	EtherNet POWERLINK, M12 connector, 16 outputs, Negative common (PNP)
7	SI Unit	**EX250-SPR1**	PROFIBUS DP, Negative common (PNP)
		EX250-SMJ2	CC-Link, Positive common (NPN)
		EX250-SAS3	AS-Interface, 8 in/8 out, 31 slave modes, 2 power supply systems, Negative common (PNP)
		EX250-SAS5	AS-Interface, 4 in/4 out, 31 slave modes, 2 power supply systems, Negative common (PNP)
		EX250-SAS7	AS-Interface, 8 in/8 out, 31 slave modes, 1 power supply system, Negative common (PNP)
		EX250-SAS9	AS-Interface, 4 in/4 out, 31 slave modes, 1 power supply system, Negative common (PNP)
		EX250-SCA1A	CANopen, Negative common (PNP)
		EX250-SDN1	DeviceNet™, Negative common (PNP)
		EX250-SEN1	EtherNet/IP™, Negative common (PNP)
8	Input block	**EX250-IE1**	M12, 2 inputs
		EX250-IE2	M12, 4 inputs
		EX250-IE3	M8, 4 inputs
9	End plate assembly	**EX250-EA1**	Direct mounting
		EX250-EA2	DIN rail mounting
10	SII Unit	**EX126D-SMJ1**	CC-Link, Positive common (NPN)
11	Terminal block plate	**VVQC1000-74A-2**	For EX126 SI Unit mounting
12	D-sub connector housing assembly	**VVQC1000-F25-1**	F kit, 25 pins
13	Flat ribbon cable housing assembly	**VVQC1000-P26-1**	P kit, 26 pins
		VVQC1000-P20-1	P kit, 20 pins
14	Terminal block box housing assembly	**VVQC1000-T0-1**	T kit
15	Lead wire housing assembly	**VVQC1000-L25-0-1**	L kit with 0.6 m lead wire
		VVQC1000-L25-1-1	L kit with 1.5 m lead wire
		VVQC1000-L25-2-1	L kit with 3.0 m lead wire
16	Circular connector housing assembly	**VVQC1000-M26-1**	M kit, 26 pins

Manifold Assembly Part No.

D-side end plate assembly

⑰ **D-side end plate assembly part no.**

VVQC4000-3A-2 □-□

Option

—	Standard
S	Built-in silencer, Direct exhaust

Thread type

—	Rc
F	G
T	NPTF
N	NPT

Kit type

2	F, P, T, S (EX126, EX250, EX600) kit
3	L, M, S (EX260, EX500) kit

U-side end plate assembly

⑳ **U-side end plate assembly part no.**

VVQC4000-2A-1 □-□

Option

—	Standard
S	Built-in silencer, Direct exhaust

Thread type

—	Rc
F	G
T	NPTF
N	NPT

Manifold block assembly

⑱ **Manifold block assembly part no.**

VVQC4000-1 A-D-C6 □

Type

A	For 1 station
C	For 2 stations Note 2)

Note 1) Tie-rods (2 pcs.) for additional stations included.
Note 2) Bottom ported type is available only for 1 station.

Wiring specifications

D	Double wiring
S	Single wiring Note 3)

Note 3) Single wiring is available only for 1 station.

Thread type (Thread port only)

—	Rc
F	G
T	NPTF
N	NPT

Port size

Symbol	Port size
C6	Ø 6
C8	Ø 8
C10	Ø 10
C12	Ø 12
N7	Ø 1/4"
N9	Ø 5/16"
N11	Ø 3/8"
02	1/4"
03	3/8"
B	1/4" bottom ported

Replacement Parts

VQC4000	Pilot valve assembly	V118□-□ (A, B, E) **Coil type** — Standard (0.95 W) Y Low wattage type (0.4 W)	□: Coil rated voltage Example) 24 V DC: 5 A: Single/With light B: Double, 3-position/With light E: Single, Double, 3-position/ Without light

⑲ **Tie-rod assembly part no. (2 units)**

VQC4000	VVQC4000-TR-□

Note 1) Please order when reducing the number of manifold stations. When increasing the number of stations, additional orders are not required since they are included in the manifold block assembly.
Note 2) Number of stations, 02 to 16

List of Valves, Options, and Mounting Bolts

Number of options	Valve and options	Bolt part no.	Q'ty (pcs.)	Note	Option mounting diagram
0	Single valve	AXT632-17-4 (M3 x 37)	3		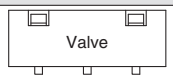
	Blanking plate (VVQ4000-10A- $\frac{1}{5}$)	AXT632-38-1 (M3 x 14)	4	For manifold	
1	Valve + Individual SUP spacer (VVQ4000-P- $\frac{1}{5}$ - $\frac{02}{03}$)	① AXT632-17-10 (M3 x 62)	3	For manifold	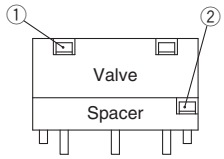
		② AXT632-17-19 (M3 x 26)	2		
	Valve + Individual EXH spacer (VVQ4000-R- $\frac{1}{5}$ - $\frac{02}{03}$)	① AXT632-17-10 (M3 x 62)	3	For manifold	
		② AXT632-17-19 (M3 x 26)	2		
	Valve + Restrictor spacer (VVQ4000-20A- $\frac{1}{5}$)	① AXT632-17-10 (M3 x 62)	3		
		② AXT632-17-19 (M3 x 26)	2	Not necessary when mounting the sub-plate.	
	Valve + Release valve spacer (VVQ4000-24A- $\frac{1}{5}$ D)	① AXT632-17-10 (M3 x 62)	3	For manifold	
		② AXT632-17-19 (M3 x 26)	2		
	Valve + SUP stop valve spacer (VVQ4000-37A- $\frac{1}{5}$)	① AXT632-17-10 (M3 x 62)	3		
		② AXT632-17-19 (M3 x 26)	2	Not necessary when mounting the sub-plate.	
	Valve + Double check spacer with residual pressure exhaust (VVQ4000-25A- $\frac{1}{5}$)	① AXT632-17-11 (M3 x 87)	3		
		② AXT632-41-1 (M3 x 54)	2	Not necessary when mounting the sub-plate.	
	Valve + Interface regulator (ARBQ4000-00 $\frac{A}{B}$ - $\frac{1}{5}$)	① AXT632-17-11 (M3 x 87)	3		
		② AXT632-17-8 (M3 x 52)	2	Not necessary when mounting the sub-plate.	
	Blanking plate + SUP stop valve (Top) (Bottom)	① AXT632-41-4 (M3 x 42)	3	For manifold	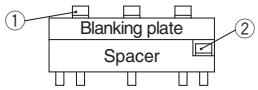
		② AXT632-17-19 (M3 x 26)	2		
2	Valve + Individual SUP + Individual EXH (Top) (Bottom) (Bottom) (Top)	① AXT632-17-11 (M3 x 87)	3	For manifold	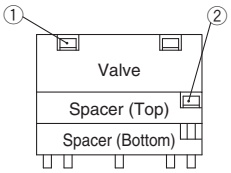
		② AXT632-17-8 (M3 x 52)	2		
	Valve + Restrictor + Individual SUP or Individual EXH (Top) (Top) (Bottom) (Bottom)	① AXT632-17-11 (M3 x 87)	3	For manifold The individual EXH cannot be mounted on the top.	
		② AXT632-17-8 (M3 x 52)	2		
	Valve + SUP stop valve + Individual SUP, Individual EXH or Restrictor (Bottom) (Top)	① AXT632-17-11 (M3 x 87)	3	For manifold	
		② AXT632-17-8 (M3 x 52)	2		
	Valve + Double check spacer with residual pressure exhaust + Individual SUP or Individual EXH (Top) (Bottom)	① AXT632-17-14 (M3 x 112)	3	For manifold	
		② AXT632-41-2 (M3 x 78)	2		
	Valve + Interface regulator + Individual SUP, Individual EXH or Restrictor (Top) (Bottom)	① AXT632-17-14 (M3 x 112)	3	For manifold The individual EXH and restrictor can be mounted on the top.	
		② AXT632-41-2 (M3 x 78)	2		
	Valve + Restrictor + Double check spacer with residual pressure exhaust (Top) (Bottom)	① AXT632-17-14 (M3 x 112)	3	For manifold	
		② AXT632-41-2 (M3 x 78)	2		
	Valve + Double check spacer with residual pressure exhaust + Interface regulator (Bottom) (Top)	① AXT632-17-16 (M3 x 137)	3	For manifold	
		② AXT632-41-3 (M3 x 103)	2		
	Blanking plate + SUP stop valve + Individual SUP (Top) (Bottom)	① AXT632-17-17 (M3 x 66)	3	For manifold	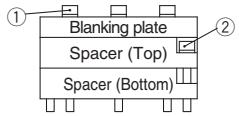
		② AXT632-17-8 (M3 x 52)	2		
3	Valve + SUP stop valve (Top) + Individual SUP (Middle, Bottom) + Individual EXH (Middle, Bottom)	① AXT632-17-14 (M3 x 112)	3	For manifold	
		② AXT632-17-13 (M3 x 77)	2		
	Valve + Double check spacer with residual pressure exhaust (Top) + Individual SUP (Middle, Bottom) + Individual EXH (Middle, Bottom)	① AXT632-17-16 (M3 x 137)	3	For manifold	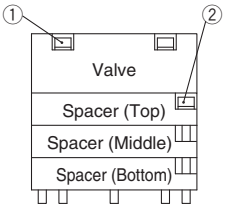
		② AXT632-41-3 (M3 x 103)	2		
	Valve + Spacer (Top): Interface regulator Spacer (Middle): "Individual SUP or Individual EXH"/"Restrictor" Spacer (Bottom): "Restrictor"/"Individual SUP or Individual EXH"	① AXT632-17-16 (M3 x 137)	3	For manifold The individual EXH and restrictor can be mounted on the top.	
		② AXT632-41-3 (M3 x 103)	2		
	Valve + Double check spacer with residual pressure exhaust (Top) + SUP stop valve (Middle) + Individual SUP (EXH) (Bottom)	① AXT632-17-16 (M3 x 137)	3	For manifold	
		② AXT632-41-3 (M3 x 103)	2		
	Valve + Interface regulator (Top) + Double check spacer with residual pressure exhaust (Middle) + Individual SUP (EXH) (Bottom)	① AXT632-17-20 (M3 x 162)	3	For manifold available as special order	
		② AXT632-41-5 (M3 x 128)	2		

Note) When the SUP stop valve and individual SUP are mounted, the stop valve is mounted on the top of the individual SUP.

Specific Product Precautions 1

Be sure to read this before handling. Refer to the back cover for Safety Instructions. For 3/4/5 Port Solenoid Valve Precautions, refer to "Handling Precautions for SMC Products" and the Operation Manual on the SMC website, http://www.smc.eu

Continuous Duty

⚠ Warning

When the product is continuously energised for a long period of time (10 minutes or longer), select the low wattage type (DC specification). The AC type cannot be continuously energised for 10 minutes or longer. If anything is unclear, please contact SMC.

Manual Override

⚠ Warning

Since connected equipment will operate when the manual override is activated, confirm that conditions are safe prior to activation.

■ VQC4000

Push type (Tool required)

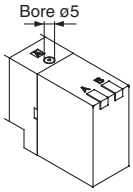

Push down the manual override button with a small screwdriver, etc., until it stops.
The manual override will return when released.

Locking type (Tool required)

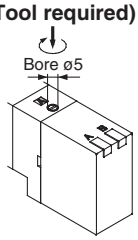

Push down the manual override button with a small flat head screwdriver until it stops, and turn it clockwise 90° to lock it.
Turn it counterclockwise to release it.

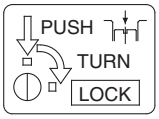

Locking type (Manual)

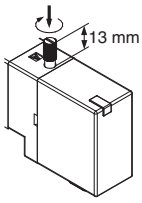

Push down the manual override button with a small flat head screwdriver or with your finger until it stops, and turn it clockwise 90° to lock it. Turn it counterclockwise to release it.

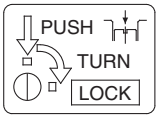

⚠ Caution
Do not apply excessive torque when turning the locking type manual override. (0.1 N·m or less)

Valve Mounting

⚠ Caution

After confirming that the gasket is installed correctly, securely tighten the mounting screws according to the tightening torque shown below.

Proper tightening torque [N·m]
0.8 to 1.2

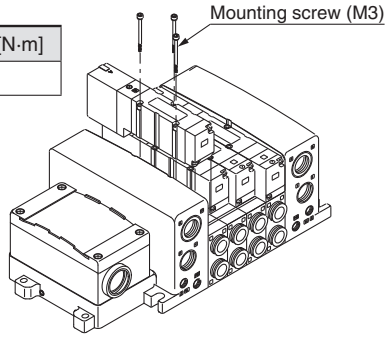

Replacement of One-touch Fittings

⚠ Caution

Cylinder port fittings are available in cassette type and can be replaced easily. Fittings are secured with a retaining clip that is inserted from the top side of the valve. After removing the valve, remove the clip with a flat head screwdriver to replace the fittings. To mount a fitting, insert the fitting assembly until it stops and reinsert the retaining clip to its designated position.

Applicable tube O.D.	Fitting assembly part no.
	VQC4000
Ø 6	VVQ4000-50B-C6
Ø 8	VVQ4000-50B-C8
Ø 10	VVQ4000-50B-C10
Ø 12	VVQ4000-50B-C12
Ø 1/4"	VVQ4000-50B-N7
Ø 5/16"	VVQ4000-50B-N9
Ø 3/8"	VVQ4000-50B-N11

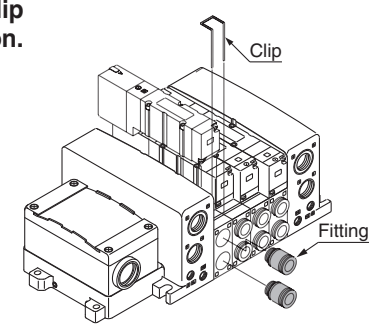

Installation and Removal of Light Cover

⚠ Caution

Installation/Removal of light cover

- **Removal**
  Open the cover by inserting a small flat head screwdriver into the slot on the side of the pilot assembly (see drawing below), lift the cover out about 1 mm and then pull off. If it is pulled off at an angle, the pilot valve may be damaged or the protective O-ring may be scratched.
- **Installation**
  Place the cover straight over the pilot assembly so that the pilot valve is not touched, and push it until the cover hook locks without twisting the protective O-ring. (When pushed in, the hook opens and locks automatically.)

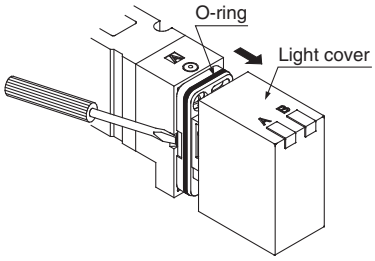

Specific Product Precautions 2

Be sure to read this before handling. Refer to the back cover for Safety Instructions. For 3/4/5 Port Solenoid Valve Precautions, refer to "Handling Precautions for SMC Products" and the Operation Manual on the SMC website, http://www.smc.eu

Replacement of Pilot Valve

⚠ Caution

- **Removal**
  1) Remove the mounting screw that holds the pilot valve using a small screwdriver.
- **Installation**
  1) After confirming the gasket is correctly placed under the valve, securely tighten the bolts with the proper torque shown in the table below.

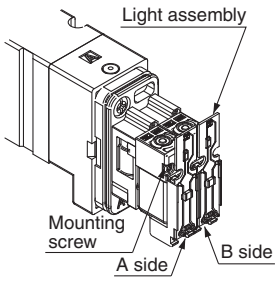

∗ Refer to page 31 for pilot valve assembly part number.

Proper tightening torque [N·m]
0.1 to 0.13

Note) The light circuit boards: A side is orange and the B side is green. It must be mounted on the pilot valve in accordance with the mounting indicators.

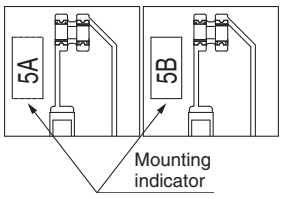

Internal Wiring Specifications

⚠ Caution

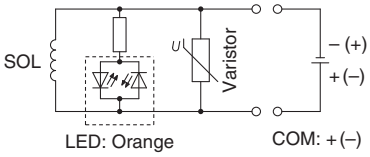

DC: Single

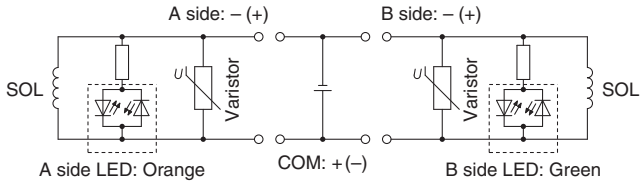

DC: Double

Note) Coil surge voltage generated when OFF is about –60 V. Please contact SMC separately for further suppression of the coil surge voltage.

How to Calculate the Flow Rate

For obtaining the flow rate, consult SMC.

Specific Product Precautions 3

Be sure to read this before handling. Refer to the back cover for Safety Instructions. For 3/4/5 Port Solenoid Valve Precautions, refer to "Handling Precautions for SMC Products" and the Operation Manual on the SMC website, http://www.smc.eu

Serial Wiring EX500/EX260/EX250/EX126 Precautions

⚠ Warning

1. **These products are intended for use in general factory automation equipment.**
   Avoid using these products in machinery/equipment which affects human safety, and in cases where malfunction or failure can result in extensive damage.
2. **Do not use in explosive environments, in the presence of inflammable gases, or in corrosive environments. This can cause injury or fire.**
3. **Work such as transporting, installing, piping, wiring, operation, control and maintenance should be performed by knowledgeable and qualified personnel only. As handling involves the risk of a danger of electrocution, injury or fire.**
4. **Install an external emergency stop circuit that can promptly stop operation and shut off the power supply.**
5. **Do not modify these products. Modifications done to these products carry the risk of injury and damage.**

⚠ Caution

1. **Read the Operation Manual carefully, strictly observe the precautions and operate within the range of the specifications.**
2. **Do not drop these products or submit them to strong impacts. This can cause damage, failure or malfunction.**
3. **In locations with poor electrical conditions, take steps to ensure a steady flow of the rated power supply. Use of a voltage outside of the specifications can cause a malfunction, damage to the Unit, electrocution or fire.**
4. **Do not touch connector terminals or internal circuit elements when current is being supplied. There is a danger of malfunction, damage to the Unit or electrocution if connector terminals or internal circuit elements are touched when current is being supplied.**
   Be sure that the power supply is OFF when adding or removing manifold valves or input blocks or when connecting or disconnecting connectors.
5. **Operate at an ambient temperature that is within the specifications. Even when the ambient temperature range is within the specifications, do not use in locations where there are rapid temperature changes.**
6. **Keep wire scraps and other extraneous materials from getting inside these products. This can cause fire, failure or malfunction.**
7. **Give consideration to the operating environment depending on the type of enclosure being used.**
   To achieve IP67 protection, provide appropriate wiring between all Units using electrical wiring cables, communication connectors and cables with M12 connectors. Also, provide waterproof caps when there are unused ports, and perform proper mounting of Input Units, input blocks, SI Units and manifold valves. Provide a cover or other protection for applications in which there is constant exposure to water.
8. **Use the proper tightening torques.**
   There is a possibility of damaging threads if tightening exceeds the tightening torque range.
9. **Provide adequate protection when operating in locations such as the following:**
   · Where noise is generated by static electricity
   · Where there is a strong electric field
   · Where there is a danger of exposure to radiation
   · When in close proximity to power supply lines

⚠ Caution

10. **When these products are installed in equipment, provide adequate protection against noise by using noise filters.**
11. **Since these products are components whose end usage is obtained after installation in other equipment, the customer should confirm conformity to EMC directives for the finished product.**
12. **Do not remove the name plate.**
13. **Perform periodic inspections and confirm normal operation, otherwise it may be impossible to guarantee safety due to unexpected malfunction or erroneous operation.**
14. **Take great care since the SI Unit side surface of the EX260-SPN□ may become hot, causing burn hazard.**
15. **Do not use in places where there are cyclic temperature changes.**
    In case that the cyclic temperature is beyond normal temperature changes, the inside product unit is likely to be adversely effected.
16. **Do not use in direct sunlight.**
    Do not use in direct sunlight. It may cause malfunction or damage.
17. **Do not use in places where there is radiated heat around it.**
    Such a place is likely to cause malfunction.

Power Supply Safety Instructions

⚠ Caution

1. **Operation is possible with a single power supply or a separate power supply. However, be sure to provide two wiring systems (one for solenoid valves, and one for Input and Control Units). When it is UL compliant, use a class 2 power supply unit in accordance with UL1310 for a combined direct current power supply.**
2. **Select the proper type of enclosure according to the environment of operation.**
   IP65/67 protection class is achieved when the following conditions are met.
   1) The Units are connected properly with wiring cable for power supply, communication connector, and cable with M12 connector.
   2) Suitable mounting of each Unit and manifold valve.
   3) Be sure to mount a seal cap on any unused connectors.
   If using in an environment that is exposed to water splashes, please take measures such as using a cover.
   For IP40 protection class, do not use in atmospheres with corrosive gas, chemicals, sea water, water, steam, or where there is direct contact with any of these.
   When EX260-SPR5/6/7/8 are connected, the enclosure of the manifold should be IP40.

Cable Safety Instructions

⚠ Caution

1. **Avoid miswiring, as this can cause a malfunction, damage and fire in the Unit.**
2. **To prevent noise and surge in signal lines, keep all wiring separate from power lines and high voltage lines. Otherwise, this can cause a malfunction.**
3. **Check wiring insulation, as defective insulation can cause damage to the Unit when excessive voltage or current is applied.**
4. **Do not bend or pull cables repeatedly, and do not place heavy objects on them or allow them to be pinched. This can cause broken lines.**

Specific Product Precautions 4

Be sure to read this before handling. Refer to the back cover for Safety Instructions. For 3/4/5 Port Solenoid Valve Precautions, refer to "Handling Precautions for SMC Products" and the Operation Manual on the SMC website, http://www.smc.eu

EX600 Precautions

Design / Selection

⚠ Warning

1. **Do not use beyond the specification range.**
   Using beyond the specification range can cause a fire, malfunction, or damage to the system.
   Check the specifications before operation.
2. **When using for an interlock circuit:**
   - **Provide a multiple interlock system which is operated by another system (such as mechanical protection function).**
   - **Perform an inspection to confirm that it is working properly.**

   Otherwise, this may cause possible injuries due to malfunction.

⚠ Caution

1. **When applicable to UL, use a Class 2 power supply unit conforming to UL1310 for direct current power supply.**
2. **Use within the specified voltage range.**
   Using beyond the specified voltage range is likely to cause the product to be damaged or to malfunction.
3. **The power supply for the unit should be 0 V as the standard for both power supply for output as well as power supply for control/input.**

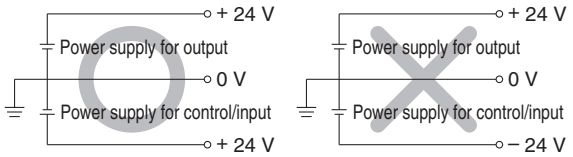

4. **Do not install in places where it can be used as a foothold.**
   Applying any excessive load such as stepping on the product by mistake or placing a foot on it, will cause it to break.
5. **Keep the surrounding space free for maintenance.**
   When designing a system, take into consideration the amount of free space needed for performing maintenance.
6. **Do not remove the name plate.**
   Improper maintenance or incorrect use of Operation Manual can cause equipment failure or malfunction. Also, there is a risk of losing conformity with safety standards.
7. **Beware of inrush current when the power supply is turned on.**
   Some connected loads can apply an initial charge current which will trigger the over current protection function, causing the Unit to malfunction.

Mounting

⚠ Caution

1. **When handling and assembling Units:**
   - **Do not touch the sharp metal parts of the connector or plug.**
   - **Do not apply excessive force to the Unit when disassembling.**
     The connecting portions of the Unit are firmly joined with seals.
   - **When joining Units, take care not to get fingers caught between Units.**
     Injury can result.
2. **Do not drop, bump, or apply excessive impact.**
   Otherwise, this can cause damage, equipment failure or malfunction.
3. **Observe the tightening torque range.**
   Tightening outside of the allowable torque range will likely damage the screw.
   IP67 cannot be guaranteed if the screws are not tightened to the specified torque.
4. **When lifting a large size Manifold Solenoid Valve Unit, take care to avoid causing stress to the valve connection joint.**
   The connection joint with the Unit may be damaged.
   Because the product may be heavy, carrying and installation should be performed by more than one operator to avoid strain or injury.
5. **When placing a manifold, mount it on a flat surface.**
   Torsion in the whole manifold can lead to trouble such as air leakage or contact failure.

Wiring

⚠ Caution

1. **Provide the grounding to maintain the safety of the reduced wiring system and to improve the noise immunity.**
   Provide a specific grounding as close to the Unit as possible to minimise the distance to grounding.
2. **Avoid repeatedly bending or stretching the cable and applying a heavy object or force to it.**
   Wiring applying repeated bending and tensile stress to the cable can break the circuit.
3. **Avoid miswiring.**
   If miswired, there is a danger of malfunction or damage to the reduced wiring system.

Specific Product Precautions 5

Be sure to read this before handling. Refer to the back cover for Safety Instructions. For 3/4/5 Port Solenoid Valve Precautions, refer to "Handling Precautions for SMC Products" and the Operation Manual on the SMC website, http://www.smc.eu

EX600 Precautions

Wiring

⚠ Caution

4. Do not wire while energising the product.

There is a danger of malfunction or damage to the reduced wiring system or input/output device.

5. Avoid wiring the power line and high pressure line in parallel.

Noise or surge produced by signal line resulting from the power line or high pressure line could cause a malfunction.
Wiring of the reduced wiring system or input/output device and the power line or high pressure line should be separated from each other.

6. Check for the wiring insulation.

Defective insulation (contact with other circuits, improper insulation between terminals, etc.) may cause damage to the reduced wiring system or input/output device due to excessive voltage or current.

7. When the reduced wiring system is installed in machinery/equipment, provide adequate protection against noise by using noise filters etc.

Noise in signal lines may cause a malfunction.

8. When connecting wires of input/output device or Handheld Terminal, prevent water, solvent or oil from entering inside from the connecter section.

Otherwise, this can cause damage, equipment failure or malfunction.

9. Avoid wiring patterns in which excessive stress is applied to the connector.

This may cause equipment failure or malfunction due to contact failure.

Operating Environment

⚠ Warning

1. Do not use in an atmosphere containing an inflammable gas or explosive gas.

Use in such an atmosphere is likely to cause a fire or explosion. This system is not explosion-proof.

⚠ Caution

1. Select the proper type of enclosure according to the environment of operation.

IP65/67 is achieved when the following conditions are met.

1) Provide appropriate wiring between Units using electrical wiring cables, communication connectors and cables with M12 connectors.
2) Suitable mounting of each Unit and manifold valve.
3) Be sure to mount a seal cap on any unused connectors.

If using in an environment that is exposed to water splashes, please take measures such as using a cover.
When the enclosure is IP40, do not use in an operating environment or atmosphere where it may come in contact with corrosive gas, chemical agents, seawater, water, or water vapor. When connected to the EX600-D□□E or EX600-D□□F, manifold enclosure is IP40.
Also, the Handheld Terminal conforms to IP20, so prevent foreign matter from entering inside, and water, solvent or oil from coming in direct contact with it.

Operating Environment

⚠ Caution

2. Provide adequate protection when operating in locations such as the following.

Failure to do so may cause a malfunction or equipment failure. The effect of countermeasures should be checked in individual equipment and machine.

1) Where noise is generated by static electricity etc.
2) Where there is a strong electric field
3) Where there is a danger of exposure to radiation
4) When in close proximity to power supply lines

3. Do not use in an environment where oil and chemicals are used.

Operating in environments with coolants, cleaning solvents, various oils or chemicals may cause adverse effects (damage, malfunction) to the Unit even in a short period of time.

4. Do not use in an environment where the product could be exposed to corrosive gas or liquid.

This may damage the Unit and cause it to malfunction.

5. Do not use in locations with sources of surge generation.

Installation of the Unit in an area around the equipment (electromagnetic lifters, high frequency induction furnaces, welding machine, motors, etc.), which generates the large surge voltage could cause to deteriorate an internal circuitry element of the Unit or result in damage. Implement countermeasures against the surge from the generating source, and avoid touching the lines with each other.

6. Use the product type that has an integrated surge absorption element when directly driving a load which generates surge voltage by relay, solenoid valves or lamp.

When a surge generating load is directly driven, the Unit may be damaged.

7. The product is CE marked, but not immune to lightning strikes. Take measures against lightning strikes in your system.

8. Keep dust, wire scraps and other foreign matter from entering inside the product.

This may cause equipment failure or malfunction.

9. Mount the Unit in such locations, where no vibration or shock is affected.

This may cause equipment failure or malfunction.

10. Do not use in places where there are cyclic temperature changes.

In case that the cyclic temperature is beyond normal temperature changes, the internal Unit is likely to be adversely affected.

11. Do not use in direct sunlight.

This may cause equipment failure or malfunction.

12. Observe the ambient temperature range.

This may cause a malfunction.

13. Do not use in places where there is radiated heat around it.

Such places are likely to cause a malfunction.

Specific Product Precautions 6

Be sure to read this before handling. Refer to the back cover for Safety Instructions. For 3/4/5 Port Solenoid Valve Precautions, refer to "Handling Precautions for SMC Products" and the Operation Manual on the SMC website, http://www.smc.eu

EX600 Precautions

Adjustment / Operation

⚠ Warning

1. **Do not perform operation or setting with wet hands.**
   There is a risk of electrical shock.

<Handheld Terminal>

2. **Do not apply pressure to the LCD.**
   There is a possibility of the crack of LCD and injuring.
3. **The forced input/output function is used to change the signal status forcibly. When operating this function, be sure to check the safety of the surroundings and installation.**
   This may cause, injuries or equipment damage.
4. **Incorrect setting of parameters can cause a malfunction. Be sure to check the settings before use.**
   This may cause injuries or equipment damage.

⚠ Caution

1. **Use a watchmakers' screwdriver with thin blade for the setting of each switch of the SI Unit.**
   When setting the switch, do not touch other unrelated parts.
   This may cause parts damage or malfunction due to a short circuit.
2. **Provide adequate setting for the operating conditions.**
   Failure to do so could result in malfunction.
   Refer to the Operation Manual for setting of the switches.
3. **For details on programming and address setting, refer to the manual from the PLC manufacturer.**
   The content of programming related to protocol is designed by the manufacturer of the PLC used.

<Handheld Terminal>

4. **Do not press the setting buttons with a sharp pointed object.**
   This may cause damage or equipment failure.
5. **Do not apply excessive load and impact to the setting buttons.**
   This may cause damage, equipment failure or malfunction.

When the order does not include the SI Unit, a valve plate which connects the manifold and SI Unit, is not mounted. Use attached valve holding screws and mount the valve plate.
(Tightening torque: 0.6 to 0.7 N·m)

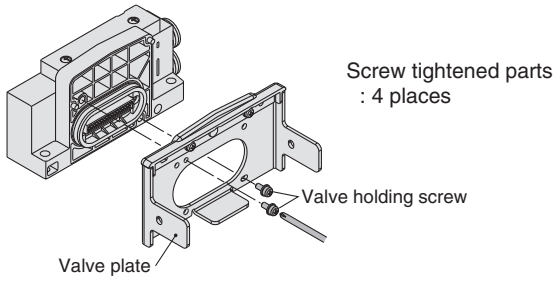

Maintenance

⚠ Warning

1. **Do not disassemble, modify (including circuit board replacement) or repair this product.**
   Such actions are likely to cause injuries or equipment failure.
2. **When an inspection is performed,**
   - **Turn off the power supply.**
   - **Stop the air supply, exhaust the residual pressure in piping and verify that the air is released before performing maintenance work.**
   Unexpected malfunction of system components and injury can result.

⚠ Caution

1. **When handling and replacing Units:**
   - **Do not touch the sharp metal parts of the connector or plug.**
   - **Do not apply excessive force to the Unit when disassembling.**
   The connecting portions of the Unit are firmly joined with seals.
   - **When joining Units, take care not to get fingers caught between Units.**
   Injury can result.
2. **Perform periodic inspection.**
   Unexpected malfunction in the system composition devices is likely to occur due to malfunction of machinery or equipment.
3. **After maintenance, make sure to perform an appropriate functionality inspection.**
   In cases of abnormality such as faulty operation, stop operation. Unexpected malfunction in the system composition devices is likely to occur.
4. **Do not use benzine and thinner for cleaning Units.**
   Damage to the surface or erasure of the display can result. Wipe off any stains with a soft cloth.
   If the stain is persistent, wipe off with a cloth soaked in a dilute solution of neutral detergent and wrung out tightly, and then finish with a dry cloth.

Other

⚠ Caution

1. **Refer to the catalogue of each series for Common Precautions and Specific Product Precautions on manifold solenoid valves.**

■ **Trademark**
DeviceNet™ is a trademark of ODVA.
EtherNet/IP™ is a trademark of ODVA.
EtherCAT® is registered trademark and patented technology, licensed by Beckhoff Automation GmbH, Germany.

Base Mounted

Plug-in: Single Unit

Series VQC5000 CE

Model

Series	Configuration		Model		Port size	Flow-rate characteristics								Response time [ms]		Weight [kg]
						1 → 4/2 (P → A/B)				4/2 → 5/3 (A/B → EA/EB)				Standard: 0.95 W	Low wattage type: 0.4 W	
						C [dm³/(s·bar)]	b	Cv	Q [l/min (ANR)] Note 5)	C [dm³/(s·bar)]	b	Cv	Q [l/min (ANR)] Note 5)			
VQC5000	2-position	Single	Metal seal	VQC5100	1/2	12	0.14	2.9	2782	14	0.18	3.4	3316	35	38	0.59
			Rubber seal	VQC5101		16	0.33	4.4	4148	17	0.31	4.7	4350	40	43	0.58
		Double	Metal seal	VQC5200		12	0.14	2.9	2782	14	0.18	3.4	3316	20	23	0.62
			Rubber seal	VQC5201		16	0.33	4.4	4148	17	0.31	4.7	4350	25	28	0.60
	3-position	Closed centre	Metal seal	VQC5300		11	0.24	2.6	2696	11	0.23	2.8	2681	50	53	0.65
			Rubber seal	VQC5301		12	0.33	3.4	3111	13	0.37	3.7	3462	60	63	0.58
		Exhaust centre	Metal seal	VQC5400		12	0.13	2.9	2767	14	0.18	3.4	3316	50	53	0.65
			Rubber seal	VQC5401		14	0.39	3.9	3781	16	0.35	4.5	4203	60	63	0.58
		Pressure centre	Metal seal	VQC5500		12	0.23	2.9	3824	13	0.24	3.3	3187	50	53	0.65
			Rubber seal	VQC5501		13	0.32	3.4	3348	14	0.40	3.9	3808	60	63	0.58
		Double check	Metal seal	VQC5600		8.0	—	—	1731	8.5	—	—	1839	62	65	1.17
			Rubber seal	VQC5601		8.3	—	—	1796	9.0	—	—	1947	75	78	1.10

Note 1) Value for valve on sub-plate
Note 2) Cylinder port 1/2: Value for valve on sub-plate
Note 3) Based on JIS B 8375-1981. (Supply pressure: 0.5 MPa {5.1 kgf/cm²}, with indicator light and surge voltage suppressor, clean air. This will change depending on pressure and air quality.) The value when ON for the double type.
Note 4) Table: Without sub-plate, With sub-plate: Add 0.65 kg.
Note 5) These values have been calculated according to ISO 6358 and indicate the flow rate under standard conditions with an inlet pressure of 0.6 MPa (relative pressure) and a pressure drop of 0.1 MPa.

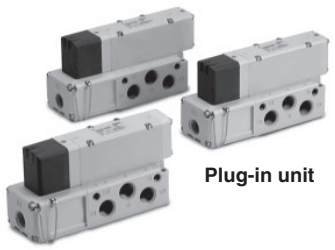

Plug-in unit

Symbol

2-position single

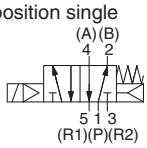

2-position double (Metal)

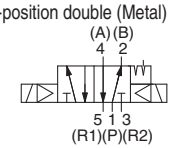

2-position double (Rubber)

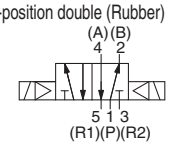

3-position closed centre

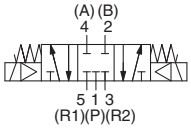

3-position exhaust centre

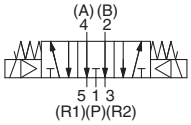

3-position pressure centre

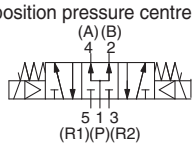

3-position double check

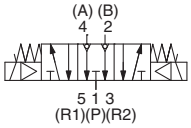

Standard Specifications

Valve specifications	Valve construction		Metal seal	Rubber seal
	Fluid		Air/Inert gas	
	Max. operating pressure	Standard (DC and AC)	1.0 MPa	
		Low wattage type (DC)		
	Min. operating pressure	Single	0.10 MPa	0.20 MPa
		Double	0.10 MPa	0.15 MPa
		3-position	0.15 MPa	0.20 MPa
	Proof pressure		1.5 MPa	
	Ambient and fluid temperature		–5 to 50 °C Note 1)	
	Lubrication		Not required	
	Manual override		Push type/Locking type (Tool required) Option/Locking type (Manual)	
	Impact/Vibration resistance		150/30 m/s² Note 2)	
	Enclosure		Dust-tight (IP67 compatible) Note 3)	
Electrical specifications	Coil rated voltage		12, 24 V DC	
	Allowable voltage fluctuation		±10 % of rated voltage	
	Coil insulation type		Class B or equivalent	
	Power consumption [W]	24 V DC	0.95, (0.4 low voltage type)	
		12 V DC	0.95, (0.4 low voltage type)	

Note 1) Use dry air to prevent condensation when operating at low temperatures.
Note 2) Impact resistance: No malfunction occurred when it is tested with a drop tester in the axial direction and at the right angles to the main valve and armature in both energised and de-energised states every once for each condition. (Values at the initial period)
Vibration resistance: No malfunction occurred in a one-sweep test between 45 and 2000 Hz. Test was performed at both energised and de-energised states in the axial direction and at the right angles to the main valve and armature. (Values at the initial period)
Note 3) Only applicable to S, T, L and M kits

How to Order Valves

Plug-in VQC5 1 0 0 □ – 5 □ □ 1 – □ □ □

Type of actuation

1		2-position single
2	Metal	2-position double
2	Rubber	2-position double
3		3-position closed centre
4		3-position exhaust centre
5		3-position pressure centre
6		3-position double check

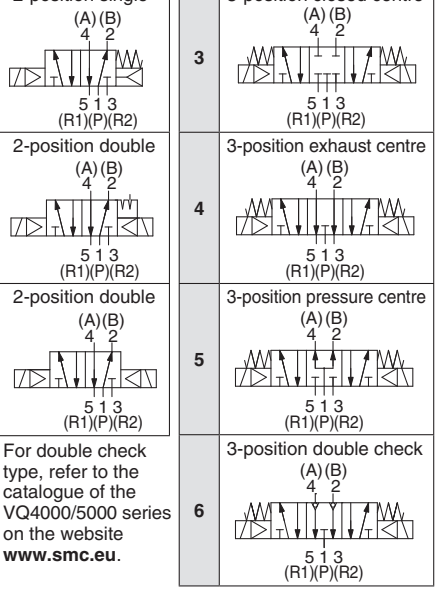

Note) For double check type, refer to the catalogue of the VQ4000/5000 series on the website **www.smc.eu**.

Body

0: Plug-in sub-plate

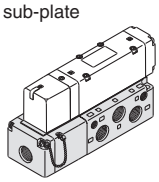

Seal

0	Metal seal
1	Rubber seal

Function

— Note 1)	Standard (0.95 W)
Y	Low wattage type (0.4 W)
R Note 2)	External pilot

Coil voltage

5	24 V DC
6	12 V DC

Light/Surge voltage suppressor

—	Yes
E	Without light, with surge voltage suppressor

Manual override

—: Non-locking push type (Tool required)

B: Locking type (Tool required)

C: Locking type (Manual)

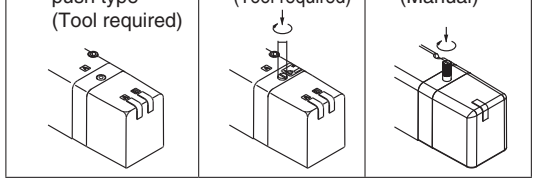

Porting specifications

—	Side ported
B	Bottom ported

Port size

—	Without sub-plate (For manifold)
04	1/2

Thread type

—	Rc
N	NPT
T	NPTF
F	G

Note 1) When the power is energised continuously, refer to "Specific Product Precautions 1" on page 73.
Note 2) For details about external pilot type, refer to the catalogue of the VQ4000/5000 series on the website **www.smc.eu**. In addition, external pilot type cannot be combined with a double check spacer.
Note 3) When multiple symbols are specified, indicate them alphabetically.

How to Order Sub-plates

VQ5000 – PW – □ 04 □ – Q

Porting specifications

—	Side ported
B	Bottom ported

Port size

04	1/2

Thread type

—	Rc
N	NPT
T	NPTF
F	G

Replacement of pilot valve assembly (Voltage)
· Refer to page 71 for pilot valve assembly part numbers.
· Refer to page 74 for replacement method.

Plug-in Type

Conduit terminal

2-position single: VQC510$^{0}_{1}$

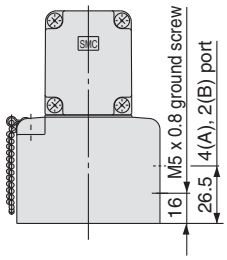

Bottom ported drawing

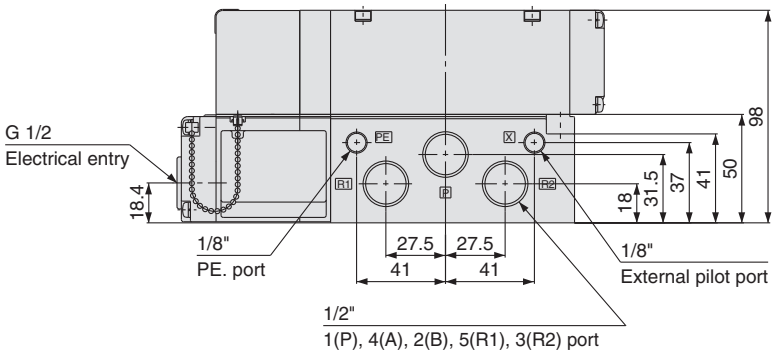

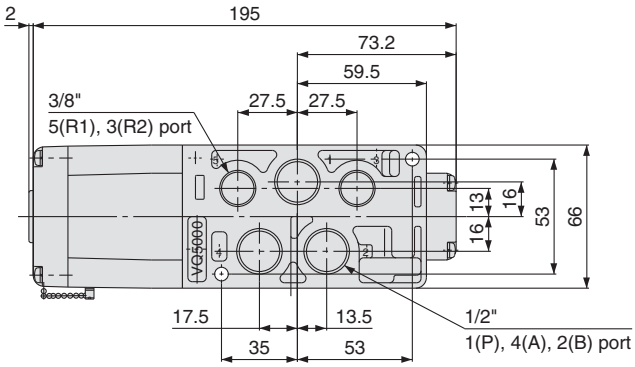

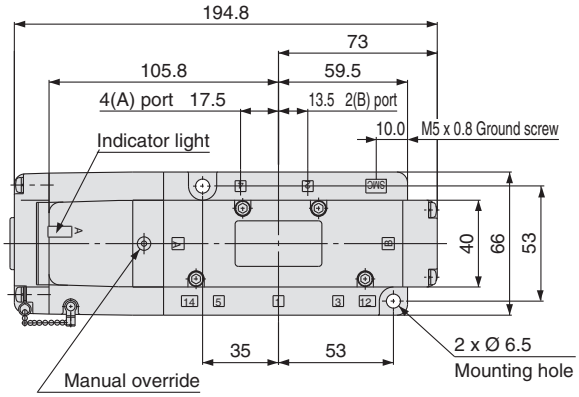

2-position double: VQC520$^{0}_{1}$
3-position closed centre: VQC530$^{0}_{1}$
3-position exhaust centre: VQC540$^{0}_{1}$
3-position pressure centre: VQC550$^{0}_{1}$

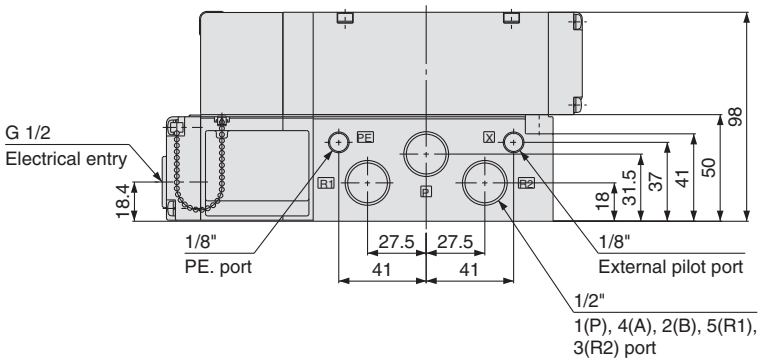

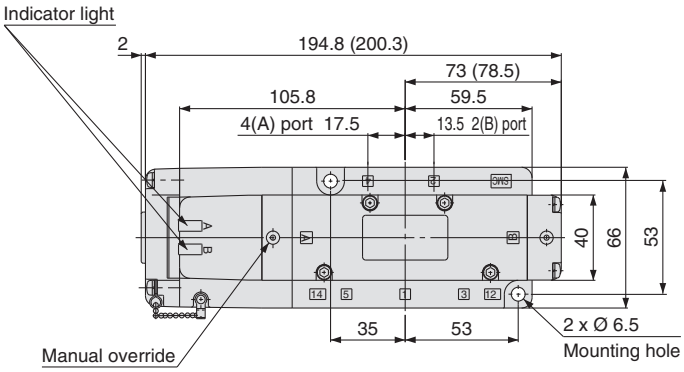

Numbers inside ( ) are for metal seal 3-position type.

3-position double check: VQC560$^{0}_{1}$

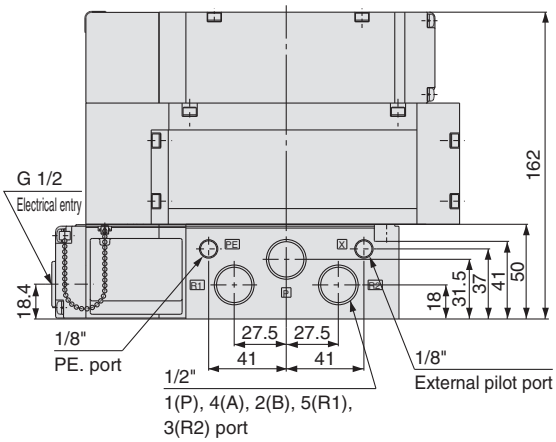

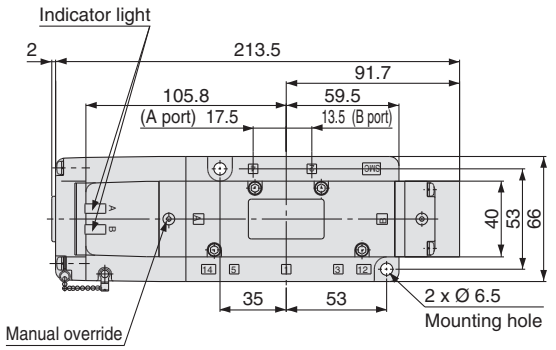

Base Mounted

Plug-in Unit

Series VQC5000

How to Order Manifold

VV5QC 5 1 – 08 03 ☐ TD0 ——— ☐ ···· F · L · M / P · T Kit

VV5QC 5 1 – 12 03 ☐ SDQ ☐ ☐ ☐ ☐ ☐ ☐ – ☐ ···· S Kit

❶ ❷ ❸ ❹ ❺ ❻ ❼ ❽ ❾ ❿ ⓫

Series VQC5000

Base mounted plug-in

Enter only for EX600-compliant S kit

Enter only for EX250-compliant S kit

❶ Stations

01	1 station
⋮	⋮
12	12 stations

The minimum or maximum number of stations differs depending on the electrical entry. (Refer to ❹)

Note) In the case of compatibility with the S kit/As-Interface, the maximum number of solenoids is as shown below, so please be careful of the number of stations.
8 in/8 out: Maximum 8 solenoids
4 in/4 out: Maximum 4 solenoids

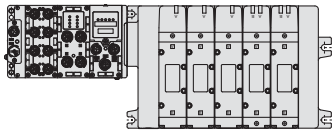

D side Stations ····· 1 ····· 2 ····· 3 ····· 4 ····· 5 ····· n U side

∗ Stations are counted from station 1 on the D-side.

❷ Cylinder port size

03	3/8
04	1/2
B	Bottom ported 1/2
CM	Mixed

❸ Thread type

—	Rc
F	G
N	NPT
T	NPTF

❺ End plate type

(Enter only for EX600-compliant S kit.)

—	Without end plate
2	M12 connector power supply
3	7/8 inch connector power supply
4	M12 connector power supply (4pins/5pins) IN/OUT
5	M12 connector power supply (4pins/5pins) IN/OUT

Note) Without SI Unit, the symbol is —.
∗ The pin layout for "4" and "5" pin connector is different.

❻ SI Unit output polarity

SI Unit output polarity		EX250 integrated-type (for I/O) serial transmission system					
		DeviceNet™	PROFIBUS DP	CC-Link	AS-Interface	CANopen	EtherNet/IP™
—	+ COM	—	—	○	—	—	—
N	– COM	○	○	—	○	○	○

SI Unit output polarity		EX260 integrated-type (for output) serial transmission system						
		DeviceNet™	PROFIBUS DP	CC-Link	EtherCAT®	PROFINET	EtherNet/IP™	EtherNet POWERLINK
—	+ COM	○	○	○	○	○	○	—
N	– COM	○	○	○	○	○	○	○

SI Unit output polarity		EX500 gateway descentralised system (64 points)			EX500 gateway descentralised system 2 (128 points)	
		DeviceNet™	PROFIBUS DP	EtherNet/IP™	EtherNet/IP™	PROFINET
—	+ COM	○	○	○	—	—
N	– COM	○	○	○	○	○

SI Unit output polarity		EX600 integrated-type (for I/O) serial transmission system (Fieldbus system)								
		DeviceNet™	PROFIBUS DP	CC-Link	EtherCAT®	PROFINET	EtherNet/IP™	EtherNet/IP™ compatible wireless base	PROFINET compatible wireless base	Wireless remote
—	+ COM	○	○	○	○	○	○	○	○	○
N	– COM	○	○	○	○	○	○	○	○	○

Note) Leave the box blank for without SI Unit (SD0☐, SD60).

❼ I/O Unit stations

(Enter only for EX600-compliant S kit.)

—	None
1	1 station
⋮	⋮
9	9 stations

Note 1) Without SI Unit, the symbol is —.
Note 2) SI Unit is not included in I/O Unit stations.
Note 3) When I/O Unit is selected, it is shipped separately, and assembled by customer. Refer to the attached operation manual for mounting method.
Note 4) Refer to page 41 for details about the enclosure.

❽ Number of input blocks

(Enter only for S kit compliant with EX250.)

Symbol	No. of blocks
—	Without SI Unit (SD0)
0	Without input block
1	With 1 input block
⋮	⋮
4	With 4 input blocks
⋮	⋮
8	With 8 input blocks

❾ Input block type

(Enter only for S kit compliant with EX250.)

—	Without input block
1	M12, 2 inputs
2	M12, 4 inputs
3	M8, 4 inputs

❿ Input block COM

(Enter only for S kit compliant with EX250.)

—	PNP sensor input or without input block
N	NPN sensor input

⓫ Option

—	None
K	Special wiring specifications (except for double wiring)
N	With name plate (available for T kit only)

❹ Kit type/Electrical entry/Cable length

∗ Numbers in parentheses represent the maximum number of solenoids in the case of mixed single and double wiring. The total number of solenoids determines the maximum number of stations. When ordering mixed wiring, please add the option symbol "-K".

S Kit (Serial transmission kit (Fieldbus system) : EX600 integrated-type (for I/O))

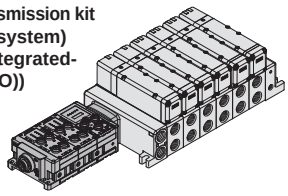

SI Unit: **EX600**

IP67 compliant

SD60	Serial kit without SI Unit	1 to 12 stations (16 stations, 24 points)
SD6Q	DeviceNet™	
SD6N	PROFIBUS-DP	
SD6V	CC-LINK	
SD6ZE	EtherNet/IP™ (1 port)	
SD6EA	EtherNet/IP™ (2 port)	
SD6D	EtherCAT®	
SD6F	PROFINET	
SD6WE	EtherNet/IP™ compatible wireless base Note 5)	
SD6WF	PROFINET compatible wireless base Note 5)	
SD6WS	Wireless remote Note 5)	

S Kit (Serial transmission kit: EX500 gateway-type)

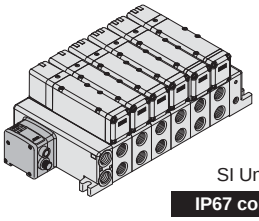

SI Unit: **EX500**

IP67 compliant

SD0A	Serial kit without SI Unit	—	—
SDA2	EX500 Gateway Decentralised system (64 points) DeviceNet™, PROFIBUS DP, EtherNet/IP™	16 Outputs	1 to 8 stations (16 stations, 16 points)
SDA3	EX500 Gateway Decentralised system 2(128 points) PROFINET, EtherNet/IP™	Note 1) 32 Outputs	1 to 12 stations (16 stations, 24 points)

S Kit (Serial transmission kit: EX260 integrated-type (for output))

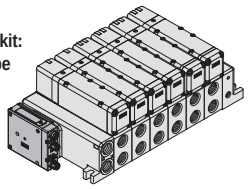

SI Unit: **EX260**

IP40 compliant

IP67 compliant

Symbol	Protocol	Number of outputs	Communication connector	Stations
SD0A	Serial kit without SI Unit			1 to 16 stations (16 stations, 24 points)
SQA	DeviceNet™	32	M12	
SQB		16		1 to 8 stations (16 stations, 16 points)
SNA	PROFIBUS DP	32	M12	1 to 12 stations (16 stations, 24 points)
SNB		16		1 to 8 stations (16 stations, 16 points)
SNC		32	D-sub Note 2)	1 to 12 stations (16 stations, 24 points)
SND		16		1 to 8 stations (16 stations, 16 points)
SVA	CC-Link	32	M12	1 to 12 stations (16 stations, 24 points)
SVB		16		1 to 8 stations (16 stations, 16 points)
SDA	EtherCAT®	32	M12	1 to 12 stations (16 stations, 24 points)
SDB		16		1 to 8 stations (16 stations, 16 points)
SFA	PROFINET	32	M12	1 to 12 stations (16 stations, 24 points)
SFB		16		1 to 8 stations (16 stations, 16 points)
SEA	EtherNet/IP™	32	M12	1 to 12 stations (16 stations, 24 points)
SEB		16		1 to 8 stations (16 stations, 16 points)
SGA	EtherNet POWERLINK	32	M12	1 to 12 stations (16 stations, 24 points)
SGB		16		1 to 8 stations (16 stations, 16 points)

S Kit (Serial transmission kit: EX250 integrated-type (for I/O))

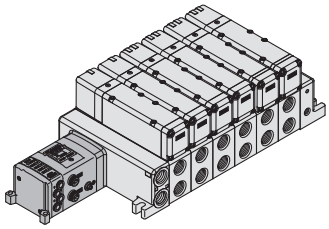

SI Unit: **EX250** **IP67 compliant**

SD0	Serial kit without SI Unit	1 to 12 stations (16 stations, 24 points)
SDQ	DeviceNet™	
SDN	PROFIBUS-DP	
SDV	CC-LINK	
SDTA	AS-Interface, 8 in/out, 31 slave modes, 2 power supply systems	1 to 4 stations (8 stations, 8 points)
SDTB	AS-Interface, 4 in/out, 31 slave modes, 2 power supply systems	1 to 2 stations (4 stations, 4 points)
SDTC Note 1)	AS-Interface, 8 in/out, 31 slave modes, 1 power supply system	1 to 4 stations (8 stations, 8 points)
SDTD Note 1)	AS-Interface, 4 in/out, 31 slave modes, 1 power supply system	1 to 2 stations (4 stations, 4 points)
SDY	CANopen	1 to 12 stations (16 stations, 24 points)
SDZEN	EtherNet/IP™	

S Kit (Serial transmission kit: EX126 integrated-type (for output))

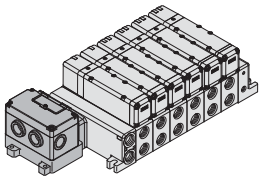

SI Unit: **EX126** **IP67 compliant**

SDVB	Serial kit for CC-LINK	1 to 8 stations (16 stations, 16 points)

P Kit (Flat ribbon cable kit)

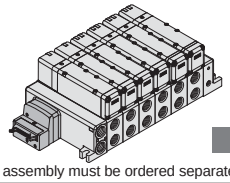

IP40 compliant

Note) For a 20P flat ribbon cable, the cable assembly must be ordered separately.

PD0	Flat ribbon cable kit (26P) without cable	1 to 12 stations (16 stations, 24 points)
PD1	Flat ribbon cable kit (26P) with 1.5 m cable	
PD2	Flat ribbon cable kit (26P) with 3.0 m cable	
PD3	Flat ribbon cable kit (26P) with 5.0 m cable	
PDC	Flat ribbon cable kit (20P) without cable Note)	1 to 8 stations (16 stations, 16 points)

F Kit (D-sub connector kit)

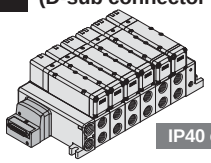

IP40 compliant

FD0	D-sub connector kit (25P) without cable	1 to 12 stations (16 stations, 24 points)
FD1	D-sub connector kit (25P) with 1.5 m cable	
FD2	D-sub connector kit (25P) with 3.0 m cable	
FD3	D-sub connector kit (25P) with 5.0 m cable	

M Kit (Circular connector kit)

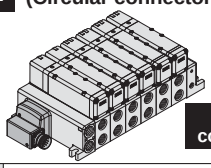

IP67 compliant

MD0	Circular connector kit (26P) without cable	1 to 12 stations (16 stations, 24 points)
MD1	Circular connector kit (26P) with 1.5 m cable	
MD2	Circular connector kit (26P) with 3.0 m cable	
MD3	Circular connector kit (26P) with 5.0 m cable	

T Kit (Terminal block box kit)

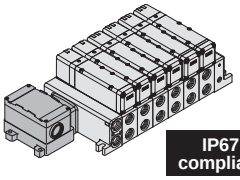

IP67 compliant

TD0	Terminal block box kit	1 to 10 stations (16 stations, 20 points)

L Kit (Lead wire kit)

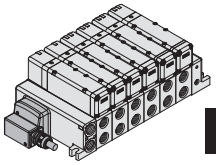

IP67 compliant

LD0	Lead wire kit, 0.6 m lead wire	1 to 12 stations (16 stations, 24 points)
LD1	Lead wire kit, 1.5 m lead wire	
LD2	Lead wire kit, 3.0 m lead wire	

∗ The maximum number of solenoids displayed in parentheses is applied to the special wiring specification (Option "-K").
Note 1) When using the II Unit with 32 outputs use the GW Unit compatible with the EX500 Gateway Decentralised System 2 (128 points).
Note 2) When selecting SI Units with SDTC or SDTD specifications, there are limits to the supply current from the SI Unit to the input block or valve. For details, refer to the catalogue on the website **www.smc.eu**.
Note 3) When selecting D-sub S kit specifications only, IP40 is compatible. (All other SI Units are IP67 compliant.)
Note 4) For the SI Unit part no., refer to page 50.
Note 5) The wireless system is suitable for use only in a country where it is in accordance with the Radio Act and regulations of that country.

How to Order Valves

VQC 5 1 0 0 □ – 5 □ □ 1

Series VQC5000 ● ⓪ ❶ ❷ ❸ ❹ ❺

⓪ Type of actuation

1	2-position single 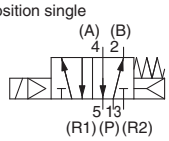	4	3-position exhaust centre 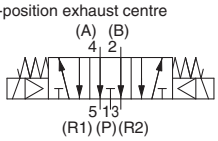
2	2-position double (Metal) 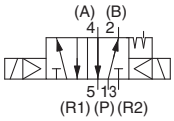	5	3-position pressure centre 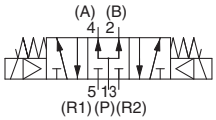
	2-position double (Rubber) 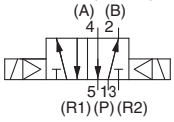	6	3-position double check 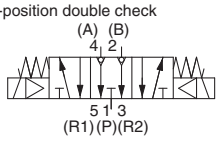
3	3-position closed centre 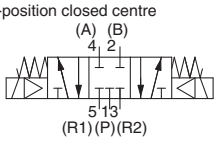		

❶ Seal type

0	Metal seal
1	Rubber seal

❷ Function

— Note 1)	Standard (0.95 W)
Y	Low wattage type (0.4 W)
R Note 2)	External pilot

Note 1) When the power is energised continuously, refer to "Specific Product Precautions 1" on page 73.
Note 2) For details about external pilot type, refer to the catalogue of the VQ4000/5000 series on the website **www.smc.eu**. In addition, external pilot type cannot be combined with a double check spacer.
Note 3) When multiple symbols are specified, indicate them alphabetically.

❸ Coil voltage

5	24 V DC Note)
6	12 V DC

Note) S kit is only available for 24 V DC.

❹ Light/Surge voltage suppressor

—	Yes
E	Without light, with surge voltage suppressor

❺ Manual override

—: Non-locking push type (Tool required)

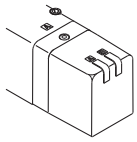

B: Locking type (Tool required)

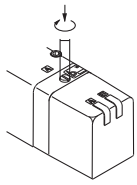

C: Locking type (Manual)

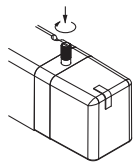

How to Order Manifold Assembly

Example (VV5QC51-□SD6□)

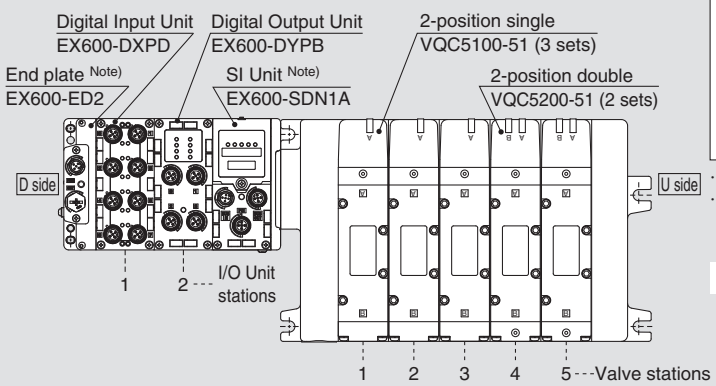

VV5QC51-0503SD6Q2N2···1 set (S kit 5-station manifold base part number)
∗VQC5100-51·····3 sets (2-position single part number)
∗VQC5200-51·····2 sets (2-position double part number)
∗EX600-DXPD·····1 set I/O Unit part number (Station 1)
∗EX600-DYPB·····1 set I/O Unit part number (Station 2)
∗ The asterisk denotes the symbol for assembly.
∗ Prefix it to the part numbers of the valve etc.

- The valve arrangement is numbered as the 1st station from the D side.
- Under the manifold part number, state the valves to be mounted, then the I/O Units in order from the 1st station as shown in the figure above. If the arrangement becomes complicated, specify on a manifold specification sheet.

Note) Do not enter the SI Unit part number and the end plate part number together.

Manifold Specifications

Series	Base model	Connection type	Piping specifications: Port direction	Port size Note 1): 1, 3 (P, R)	Port size Note 1): 2, 4 (A, B)	Note 2) Applicable stations	Applicable solenoid valve	5-station weight [g]
VQC5000	VV5QC51-□□□	■F kit: D-sub connector ■P kit: Flat ribbon cable ■T kit: Terminal block box ■S kit: Serial transmission ■L kit: Lead wire ■M kit: Circular connector	Side	D side P: 1/2 R: 1/2 (Rc, G, NPT/NPTF) U side P: 3/8 R: 3/8 (Rc, G, NPT/NPTF)	3/8,1/2 (Rc, G, NPT/NPTF)	F,L,M,P kit (1 to 12 stations) T kit (1 to 12 stations) S kit (1 to 12 stations: EX250, EX260; 1 to 12 stations: EX500, EX600)	VQC5□00-51 VQC5□01-51	4150 · S kit (Without Unit) · Not including valve weight.
			Bottom		1/2 (Rc, G, NPT/NPTF)			

Note 1) One-touch fittings in inch sizes are also available.
Note 2) As an optional specification, the maximum number of stations can be increased by special wiring specifications.

SI Unit Part Number Table

EX600 Integrated type (For Input/Output)

Symbol	Applicable protocol	SI Unit part no.		Page
		Negative common (PNP)	Positive common (NPN)	
SD6Q	DeviceNet™	EX600-SDN1A	EX600-SDN2A	33
SD6N	CC-Link	EX600-SMJ1	EX600-SMJ2	
SD6V	PROFIBUS DP	EX600-SPR1A	EX600-SPR2A	
SD6ZE	EtherNet/IP™ (1 port)	EX600-SEN1	EX600-SEN2	
SD6EA	EtherNet/IP™ (2 port)	EX600-SEN3	EX600-SEN4	
SD6D	EtherCAT®	EX600-SEC1	EX600-SEC2	
SD6F	PROFINET	EX600-SPN1	EX600-SPN2	
SD6WE	EtherNet/IP™, compatible wireless base Note)	EX600-WEN1	EX600-WEN2	
SD6WF	PROFINET, compatible wireless base Note)	EX600-WPN1	EX600-WPN2	
SD6WS	Wireless remote Note)	EX600-WSN1	EX600-WSN2	

Note) The wireless system is suitable for use only in a country where it is in accordance with the Radio Act and regulations of that country.

EX260

Symbol	Applicable protocol	Number of outputs	SI Unit part no.		Communication connector	Page
			Negative common (PNP)	Positive common (NPN)		
SQA	DeviceNet™	32	EX260-SDN1	EX260-SDN2	M12	33
SQB		16	EX260-SDN3	EX260-SDN4		
SNA	PROFIBUS DP	32	EX260-SPR1	EX260-SPR2		
SNB		16	EX260-SPR3	EX260-SPR4		
SNC		32	EX260-SPR5	EX260-SPR6	D-sub	
SND		16	EX260-SPR7	EX260-SPR8		
SVA	CC-Link	32	EX260-SMJ1	EX260-SMJ2	M12	
SVB		16	EX260-SMJ3	EX260-SMJ4		
SDA	EtherCAT®	32	EX260-SEC1	EX260-SEC2	M12	
SDB		16	EX260-SEC3	EX260-SEC4		
SFA	PROFINET	32	EX260-SPN1	EX260-SPN2	M12	
SFB		16	EX260-SPN3	EX260-SPN4		
SEA	EtherNet/IP™	32	EX260-SEN1	EX260-SEN2	M12	
SEB		16	EX260-SEN3	EX260-SEN4		
SGA	EtherNet POWERLINK	32	EX260-SPL1	—	M12	
SGB		16	EX260-SPL3	—		

EX126

Symbol	Applicable protocol	SI Unit part no.	Page
SDVB	CC-Link, Positive common (NPN)	EX126D-SMJ1	34

EX500 Gateway Decentralised System 2 (128 points)

Symbol	Applicable protocol	SI Unit part no.	Page
		Negative common (PNP)	
SDA3	EtherNet/IP™	EX500-S103	33
	PROFINET		

EX500 Gateway Decentralised System (64 points)

Symbol	Applicable protocol	SI Unit part no.		Page
		Positive common (NPN)	Negative common (PNP)	
SDA2	DeviceNet™	EX500-Q001	EX500-Q101	33
	PROFIBUS DP			
	EtherNet/IP™			

EX250 Integrated type (For Input/Output)

Symbol	Applicable protocol	SI Unit part no.	Page
SDQ	DeviceNet™, Negative common (PNP)	EX250-SDN1	34
SDN	PROFIBUS DP, Negative common (PNP)	EX250-SPR1	
SDV	CC-Link, Positive common (NPN)	EX250-SMJ2	
SDTA	AS-Interface, Negative common (PNP), (8 in/8 out, 31 slave modes, 2 power supply systems)	EX250-SAS3	
SDTB	AS-Interface, Negative common (PNP), (4 in/4 out, 31 slave modes, 2 power supply systems)	EX250-SAS5	
SDTC	AS-Interface, Negative common (PNP), (8 in/8 out, 31 slave modes, 1 power supply system)	EX250-SAS7	
SDTD	AS-Interface, Negative common (PNP), (4 in/4 out, 31 slave modes, 1 power supply system)	EX250-SAS9	
SDY	CANopen, Negative common (PNP)	EX250-SCA1A	
SDZEN	EtherNet/IP™, Negative common (PNP)	EX250-SEN1	

For details about the EX series refer to their catalogues on the website www.smc.eu and the Operation Manual. Please download the Operation Manual via SMC website, http://www.smc.eu

Manifold Options

For details about options, refer to the catalogue of the VQ4000/5000 series on the website **www.smc.eu**.

Blanking plate assembly
VVQ5000-10A-1

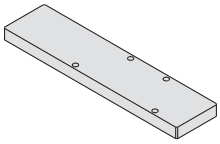

Individual SUP spacer
VVQ5000-P-1-$^{03}_{04}$

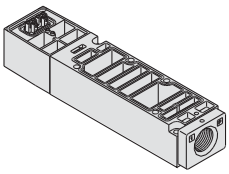

Individual EXH spacer
VVQ5000-R-1-$^{03}_{04}$

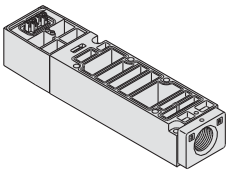

EXH block plate
VVQ5000-16A-2

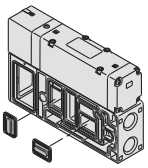

Restrictor spacer
VVQ5000-20A-1

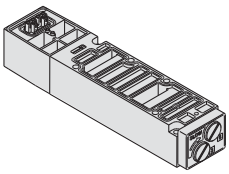

SUP stop valve spacer
VVQ5000-37A-1

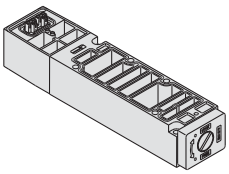

SUP block plate
VVQ5000-16A-1

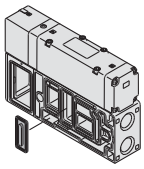

Double check spacer with residual pressure exhaust
VVQ5000-25A-1

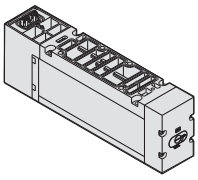

Interface regulator
(P, A, B port regulation)
ARBQ5000-00-$^{A}_{B}$-1

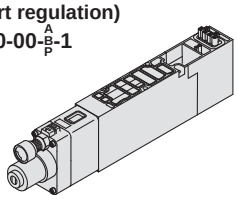

· For replacement parts, refer to page 71.

S VQC5000

Kit (Serial transmission kit): For EX600 Integrated-type (I/O) Serial Transmission System IP67 compliant

VV5QC51
S kit (Serial transmission kit: EX600)
Power supply with M12 connector

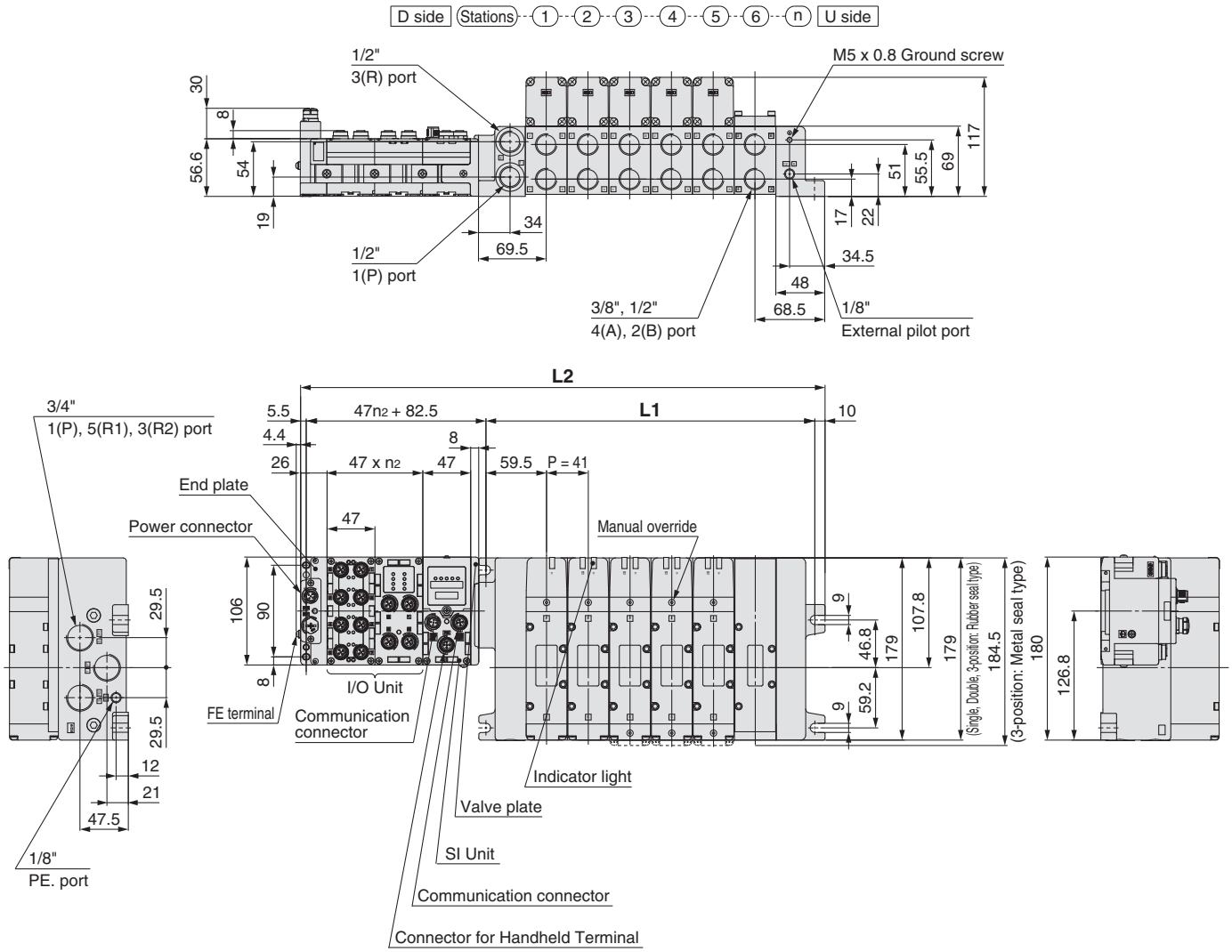

Dimensions [mm]

L \ n	1	2	3	4	5	6	7	8	9	10	11	12
L1	118	159	200	241	282	323	364	405	446	487	528	569
L2	216	257	298	339	380	421	462	503	544	585	626	667

Formula: L1 = 41n + 77, L2 = 41n + 175 ∗ L2 is the dimension without I/O Unit. Add 47 mm for each additional I/O Units. ∗ "n_2" is number of I/O Units. n: Stations (Maximum 12 stations)

S VQC5000

Kit (Serial transmission kit): For EX600 Integrated-type (I/O) Serial Transmission System IP67 compliant

VV5QC51
S kit (Serial transmission kit: EX600)
Power supply with 7/8 inch connector

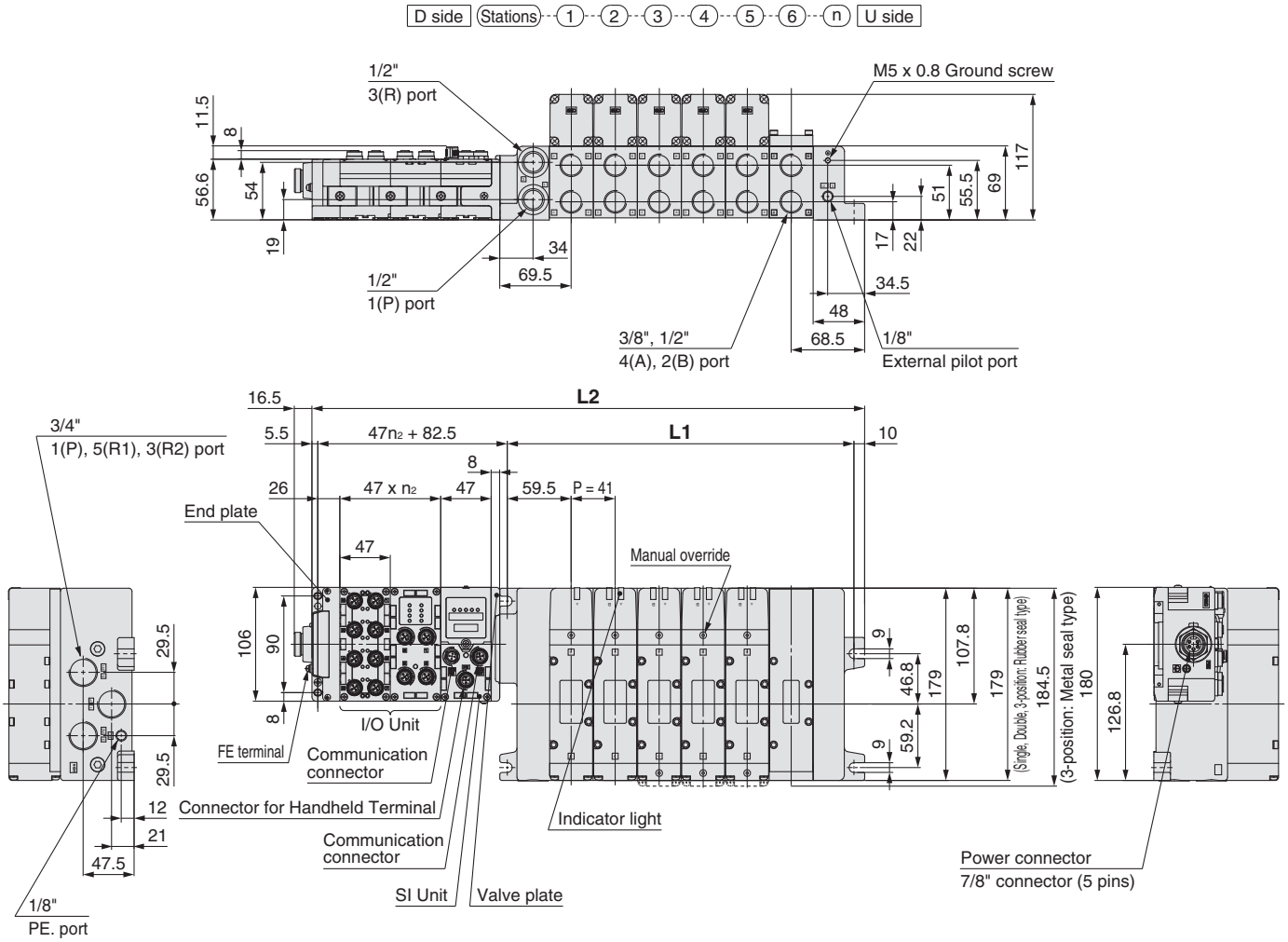

Dimensions [mm]

L \ n	1	2	3	4	5	6	7	8	9	10	11	12
L1	118	159	200	241	282	323	364	405	446	487	528	569
L2	216	257	298	339	380	421	462	503	544	585	626	667

Formula: L1 = 41n + 77, L2 = 41n + 175 ∗ L2 is the dimension without I/O Unit. Add 47 mm for each additional I/O Units. ∗ "n2" is number of I/O Units. n: Stations (Maximum 12 stations)

S VQC5000

Kit (Serial transmission kit): For EX500 Gateway-type Serial Transmission System IP67 compliant

VV5QC51
S kit (Serial transmission kit: EX500)

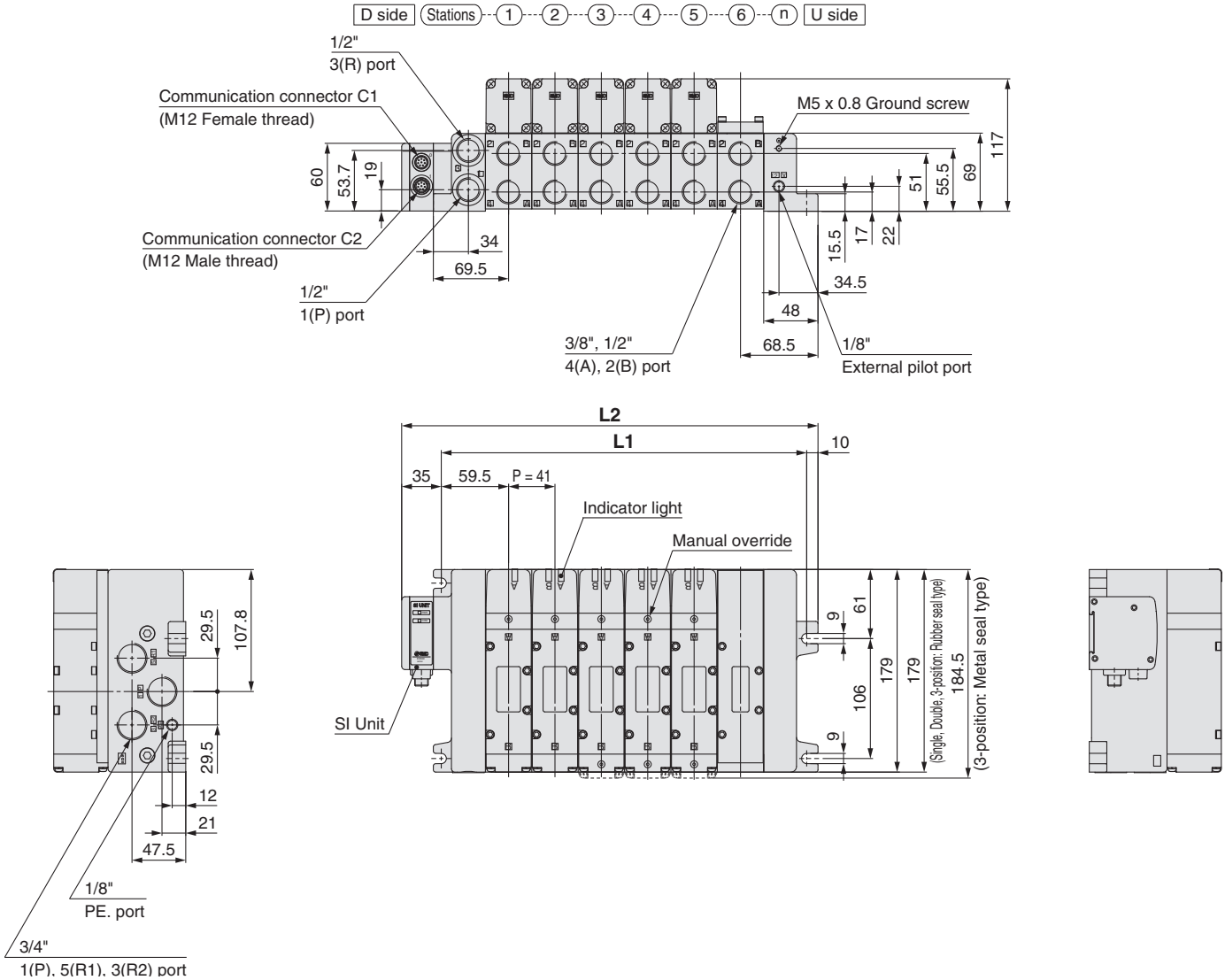

Dimensions [mm]

L \ n	1	2	3	4	5	6	7	8	9	10	11	12
L1	118	159	200	241	282	323	364	405	446	487	528	569
L2	163	204	245	286	327	368	409	450	491	532	573	614

Formula: L1 = 41n + 77, L2 = 41n + 122 n: Stations (Maximum 12 stations)

S VQC5000

IP40 compliant
IP67 compliant

Kit (Serial transmission kit): For EX260 Integrated-type (Output) Serial Transmission System

VV5QC51
S kit (Serial transmission kit: EX260)

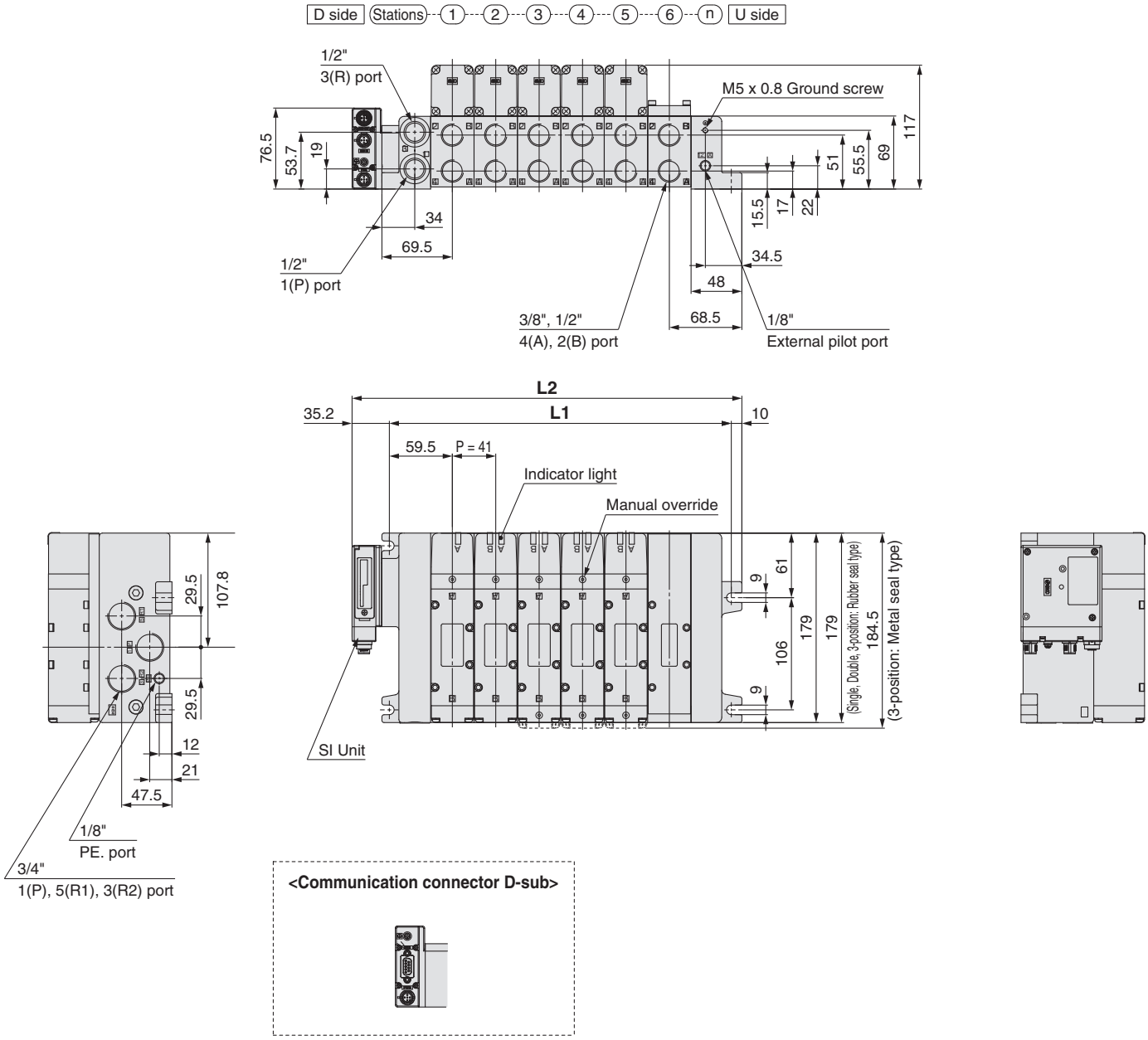

Dimensions

[mm]

L \ n	1	2	3	4	5	6	7	8	9	10	11	12
L1	118	159	200	241	282	323	364	405	446	487	528	569
L2	163.2	204.2	245.2	286.2	327.2	368.2	409.2	450.2	491.2	532.2	573.2	614.2

Formula: L1 = 41n + 77, L2 = 41n + 122.2 n: Stations (Maximum 12 stations)

S VQC5000

Kit (Serial transmission kit): For EX250 Integrated-type (I/O) Serial Transmission System IP67 compliant

VV5QC51
S kit (Serial transmission kit: EX250)

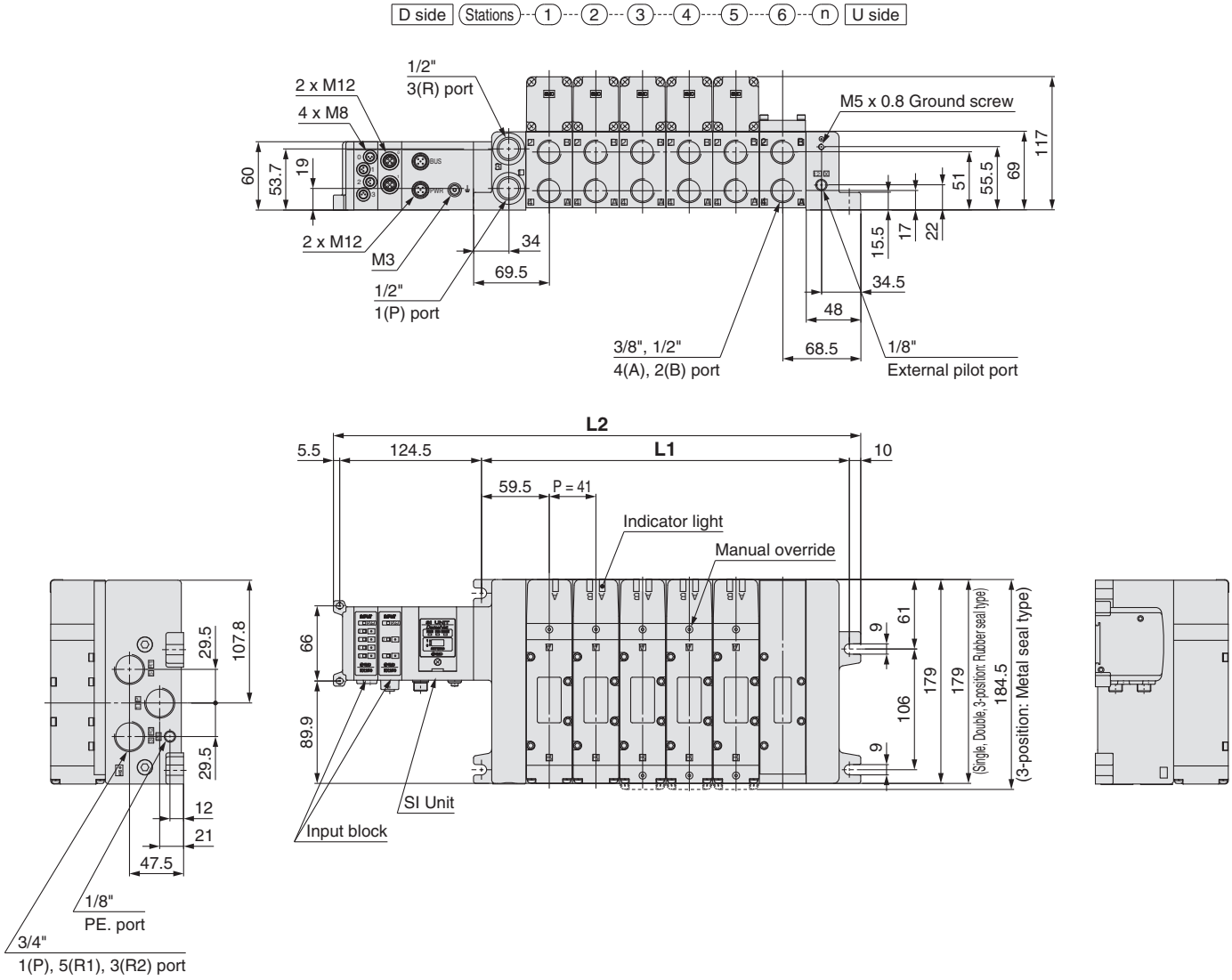

Dimensions [mm]

L \ n	1	2	3	4	5	6	7	8	9	10	11	12
L1	118	159	200	241	282	323	364	405	446	487	528	569
L2	237	278	319	360	401	442	483	524	565	606	647	688

Formula: L1 = 41n + 77, L2 = 41n + 196 (For one input block. Add 21 mm for each additional input block.) n: Stations (Maximum 12 stations)

S VQC5000

Kit (Serial transmission kit): For EX126 Integrated-type (Output) Serial Transmission System IP67 compliant

VV5QC51
S kit (Serial transmission kit: EX126)

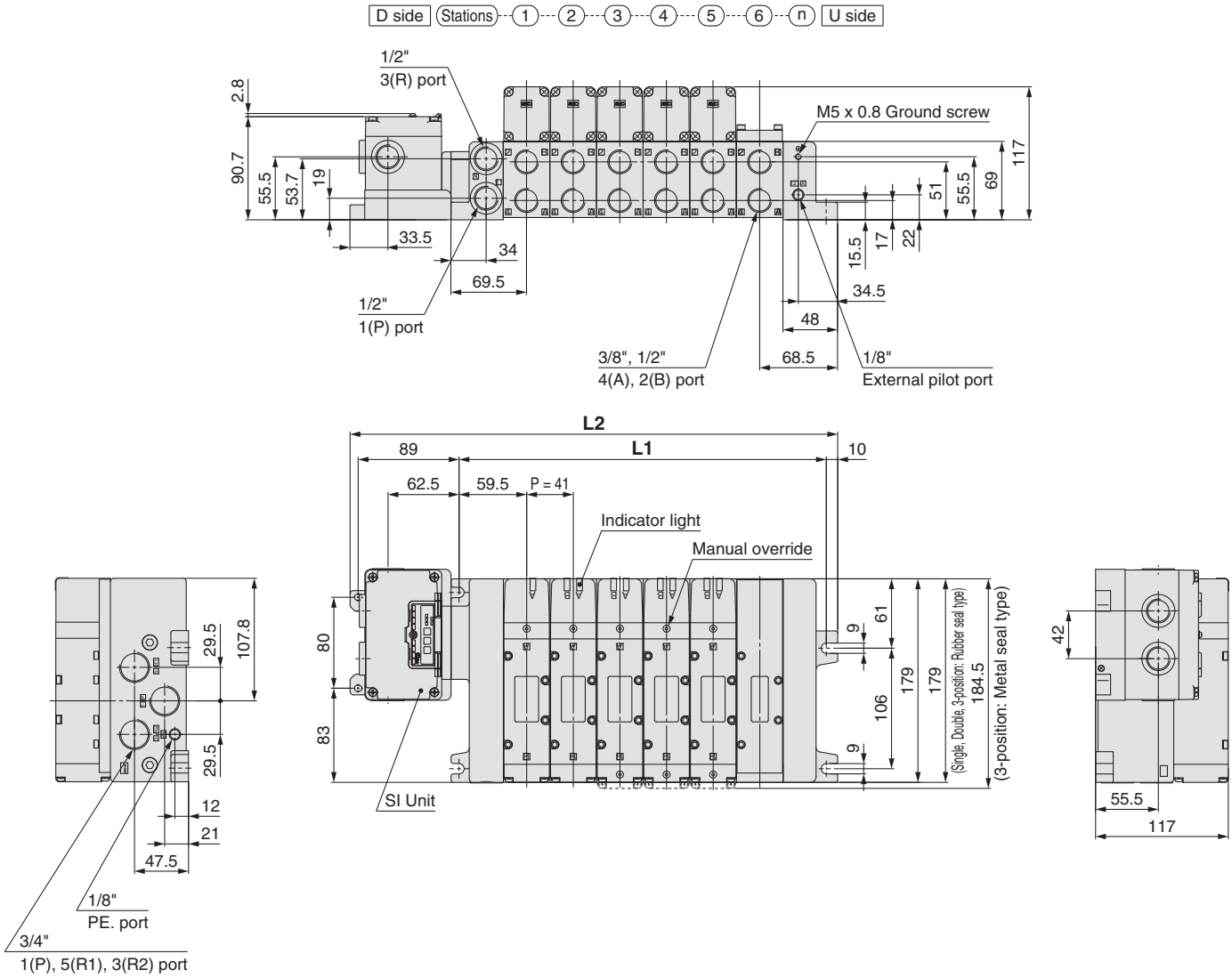

Dimensions [mm]

L \ n	1	2	3	4	5	6	7	8	9	10	11	12
L1	118	159	200	241	282	323	364	405	446	487	528	569
L2	223.8	264.8	305.8	346.8	387.8	428.8	469.8	510.8	551.8	592.8	633.8	674.8

Formula: L1 = 41n + 77, L2 = 41n + 182.8 n: Stations (Maximum 12 stations)

F VQC5000

Kit (D-sub connector kit) IP40 compliant

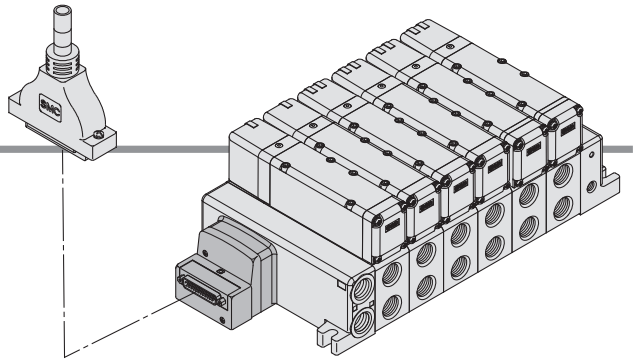

- **Using our D-sub connector for electrical connections greatly reduces labour, while it also minimizes wiring and saves space.**
- **We use a D-sub connector (25P) that conforms to MIL standards and is therefore widely compatible with many standard commercial models.**
- **Top or side entry for the connector can be changed freely, allowing for changes even after mounting, to meet any changing needs for space.**

Electrical Wiring Specifications

D-sub connector

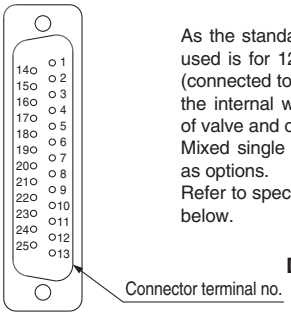

As the standard electrical wiring specification used is for 12 stations or less, double wiring (connected to SOL. A and SOL. B) is used for the internal wiring of each station regardless of valve and option types.
Mixed single and double wiring are available as options.
Refer to special wiring specifications (options) below.

Lead wire colours for D-sub connector assemblies (AXT100-DS25-015/030/050)

Standard wiring		Terminal no.	Lead wire colour	Dot marking
Station 1	SOL.A	1	Black	None
	SOL.B	14	Yellow	Black
Station 2	SOL.A	2	Brown	None
	SOL.B	15	Pink	Black
Station 3	SOL.A	3	Red	None
	SOL.B	16	Blue	White
Station 4	SOL.A	4	Orange	None
	SOL.B	17	Purple	None
Station 5	SOL.A	5	Yellow	None
	SOL.B	18	Grey	None
Station 6	SOL.A	6	Pink	None
	SOL.B	19	Orange	Black
Station 7	SOL.A	7	Blue	None
	SOL.B	20	Red	White
Station 8	SOL.A	8	Purple	White
	SOL.B	21	Brown	White
Station 9	SOL.A	9	Grey	Black
	SOL.B	22	Pink	Red
Station 10	SOL.A	10	White	Black
	SOL.B	23	Grey	Red
Station 11	SOL.A	11	White	Red
	SOL.B	24	Black	White
Station 12	SOL.A	12	Yellow	Red
	SOL.B	25	White	None
	COM.	13	Orange	Red

Special Wiring Specifications (Options)

(For 25P)

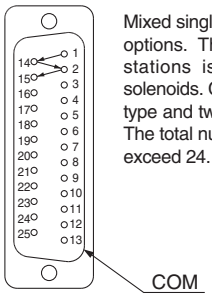

Mixed single and double wiring are available as options. The maximum number of manifold stations is determined by the number of solenoids. Count one point for a single solenoid type and two points for a double solenoid type. The total number of solenoids (points) must not exceed 24.

Cable Assembly

AXT100-DS25-015/030/050

(D-sub connector cable assemblies can be ordered with manifolds. Refer to manifold ordering.)

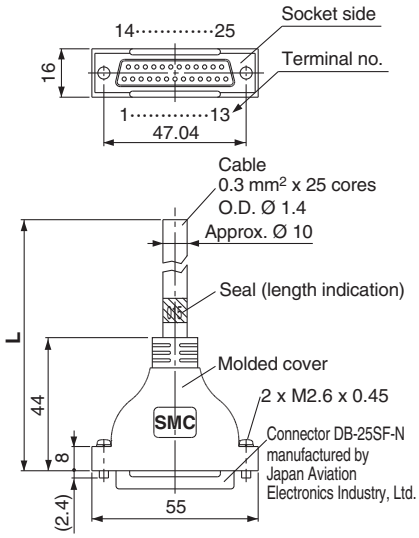

Lead wire colours for D-sub connector cable assembly terminal numbers

Terminal no.	Lead wire colour	Dot marking
1	Black	None
2	Brown	None
3	Red	None
4	Orange	None
5	Yellow	None
6	Pink	None
7	Blue	None
8	Purple	White
9	Grey	Black
10	White	Black
11	White	Red
12	Yellow	Red
13	Orange	Red
14	Yellow	Black
15	Pink	Black
16	Blue	White
17	Purple	None
18	Grey	None
19	Orange	Black
20	Red	White
21	Brown	White
22	Pink	Red
23	Grey	Red
24	Black	White
25	White	None

D-sub connector cable assemblies

Cable length [L]	Part no.	Note
1.5 m	AXT100-DS25-015	Cable 0.3 mm² x 25 cores
3 m	AXT100-DS25-030	
5 m	AXT100-DS25-050	

∗ When using a standard commercial connector, use a type 25P female connector conforming to MIL-C-24308.
∗ Cannot be used for transfer wiring.
∗ Lengths other than the above is also available. Please contact SMC for details.

Electrical characteristics

Item	Characteristic
Conductor resistance Ω/km, 20 °C	65 or less
Voltage limit V, 1 minute, AC	1000
Insulation resistance MΩ/km, 20 °C	5 or more

Note) The minimum bending radius for D-sub connector cables is 20 mm.

Connector Manufacturers Example

- Fujitsu, Ltd.
- Japan Aviation Electronics Industry, Ltd.
- J.S.T. Mfg. Co., Ltd.
- HIROSE ELECTRIC CO., LTD.

F VQC5000

Kit (D-sub connector kit) IP40 compliant

VV5QC51

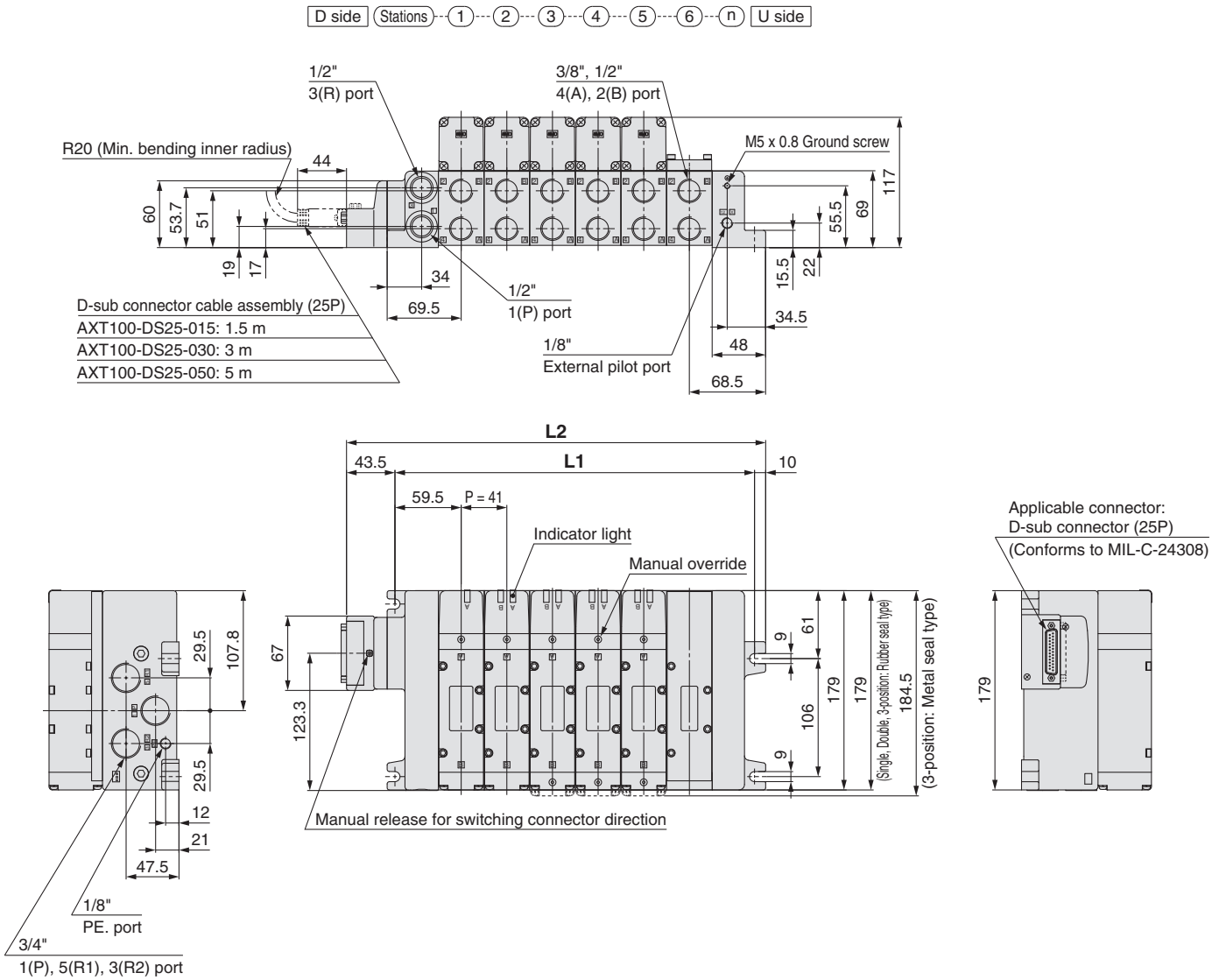

Dimensions

[mm]

L \ n	1	2	3	4	5	6	7	8	9	10	11	12
L1	118	159	200	241	282	323	364	405	446	487	528	569
L2	171.5	212.5	253.5	294.5	335.5	376.5	417.5	458.5	499.5	540.5	581.5	622.5

Formula: L1 = 41n +77, L2 = 41n + 130.5 n: Stations (Maximum 12 stations)

P VQC5000
Kit (Flat ribbon cable kit) IP40 compliant

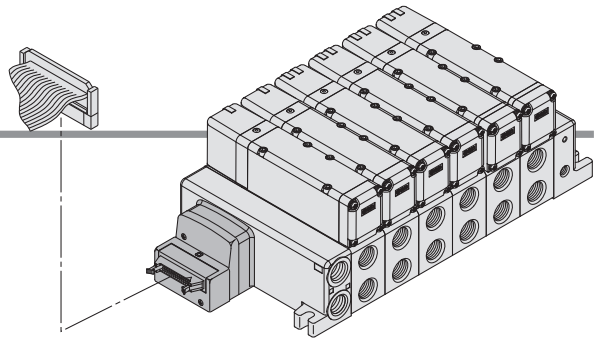

- **Using our flat ribbon cable for electrical connections greatly reduces labour, while it also minimizes wiring and saves space.**
- **We use flat ribbon cables whose connectors (26P and 20P) conform to MIL standards, and are therefore widely compatible with many standard commercial models.**
- **Top or side entry for the connector can be changed freely, allowing for changes even after mounting, to meet any changing needs for space.**

Electrical Wiring Specifications

Flat ribbon cable connector

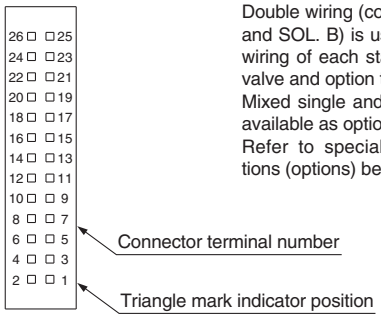

Double wiring (connected to SOL. A and SOL. B) is used for the internal wiring of each station regardless of valve and option types.
Mixed single and double wiring are available as options.
Refer to special wiring specifications (options) below.

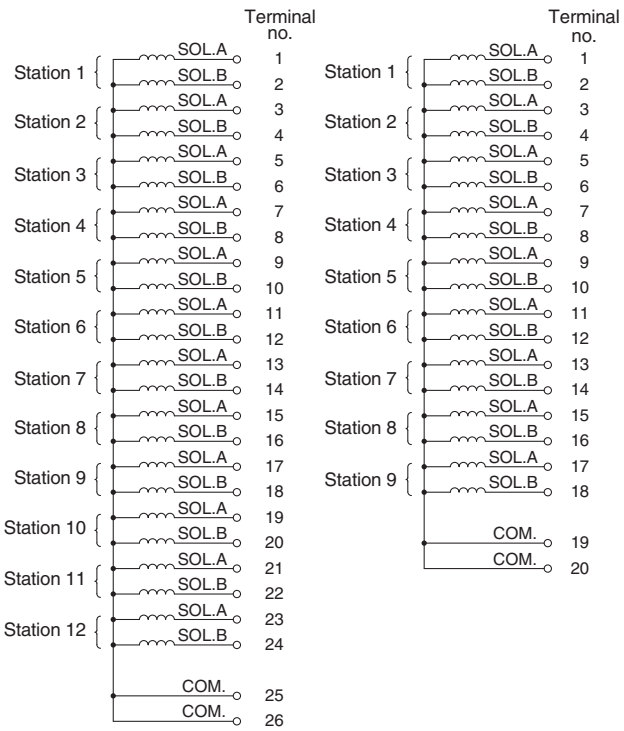

Cable Assembly

AXT100-FC $\frac{20}{26}$ - $\frac{1}{2}$ / 3

(Type 26P flat ribbon cable connector assemblies can be ordered with manifolds. Refer to manifold ordering.)

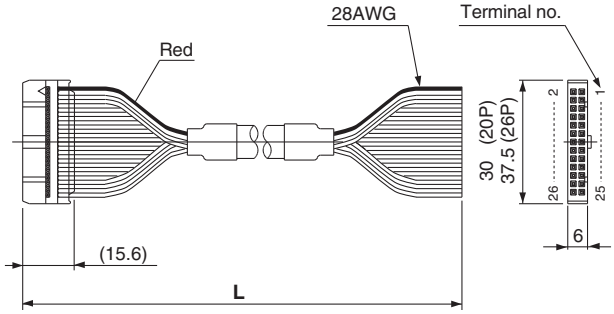

Flat ribbon cable connector assemblies

Cable length (L)	Part no.	
	26P	20P
1.5 m	AXT100-FC26-1	AXT100-FC20-1
3 m	AXT100-FC26-2	AXT100-FC20-2
5 m	AXT100-FC26-3	AXT100-FC20-3

∗ When using a standard commercial connector, use a type 26P connector conforming to MIL-C-83503 or a type 20P with strain relief.
∗ Cannot be used for transfer wiring.
∗ Lengths other than the above is also available. Please contact SMC for details.

Connector Manufacturers Example

- Hirose Electric Co., Ltd.
- Sumitomo/3M Limited
- Fujitsu, Ltd.
- Japan Aviation Electronics Industry, Ltd.
- J.S.T. Mfg. Co., Ltd.
- Oki Electric Cable Co., Ltd.

Special Wiring Specifications (Option)

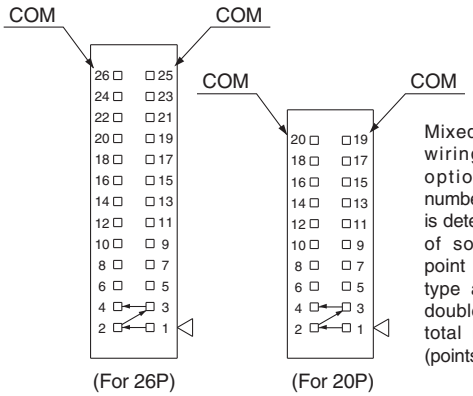

Mixed single and double wiring are available as options. The maximum number of manifold stations is determined by the number of solenoids. Count one point for a single solenoid type and two points for a double solenoid type. The total number of solenoids (points) must not exceed 24.

P VQC5000

Kit (Flat ribbon cable kit) IP40 compliant

VV5QC51

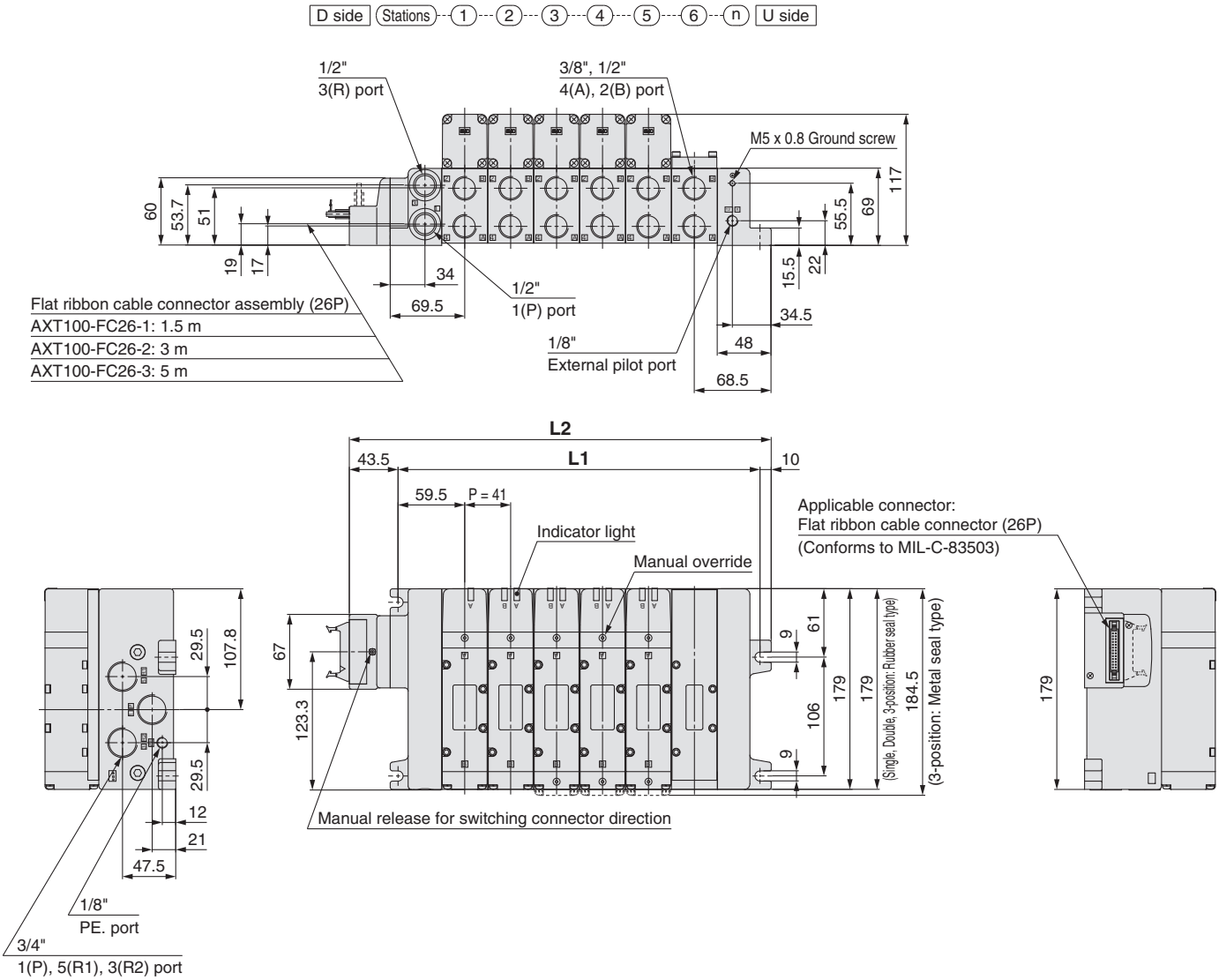

Dimensions

[mm]

L \ n	1	2	3	4	5	6	7	8	9	10	11	12
L1	118	159	200	241	282	323	364	405	446	487	528	569
L2	171.5	212.5	253.5	294.5	335.5	376.5	417.5	458.5	499.5	540.5	581.5	622.5

Formula: L1 = 41n + 77, L2 = 41n + 130.5 n: Stations (Maximum 12 stations)

T VQC5000

Kit (Terminal block box kit) IP67 compliant

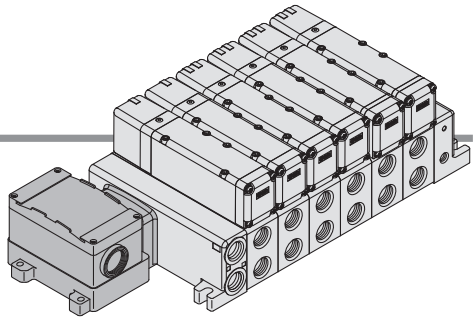

- **This kit has a small terminal block inside a junction box. The provision of a G 3/4 electrical entry allows connection of conduit fittings.**

Terminal Block Connection

Step 1. How to remove terminal block cover
Loosen the 4 mounting screws (M4) and remove the terminal block cover.

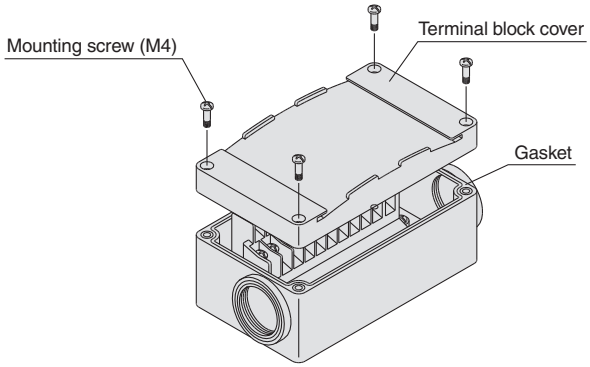

Step 2. The diagram below shows the terminal block wiring. All stations are provided with double wiring regardless of the valves which are mounted.
Connect each wire to the power supply side, according to the markings provided inside the terminal block.

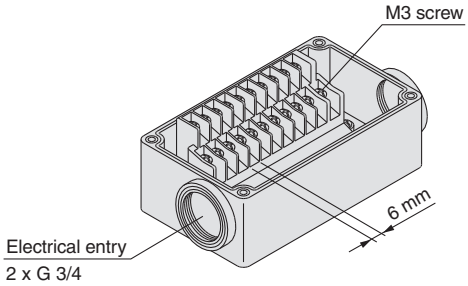

Step 3. How to replace the terminal block cover
Securely tighten the screws to the torque shown in the table below, after confirming that the gasket is installed correctly.

Proper tightening torque [N·m]
0.7 to 1.2

- Applicable crimped terminal: 1.25-3S,1.25Y-3,1.25Y-3N,1.25Y-3.5
- Name plate: VVQ5000-N-T
- Drip proof plug assembly (for G 3/4): AXT100-B06A

Electrical Wiring Specifications (Conforms to IP67)

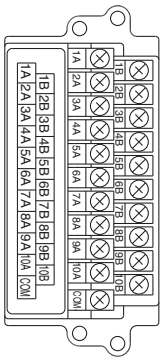

The internal wiring is double (connected to SOL. A and SOL. B) for all stations regardless of the type of valve or options.
Mixed single and double wiring are available as options.

Standard wiring

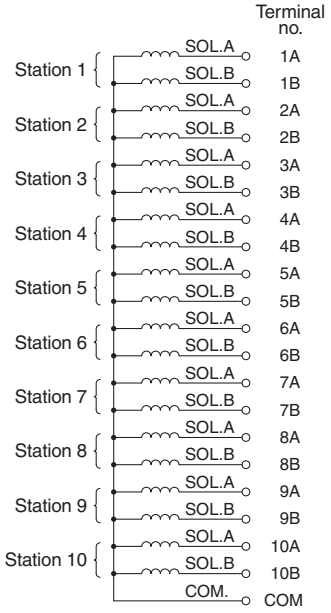

Special Wiring Specifications (Option)

Mixed single and double wiring are available as options. The maximum number of manifold stations is determined by the number of solenoids. Count one point for a single solenoid type and two points for a double solenoid type. The total number of solenoids (points) must not exceed 20.

1. How to Order
Indicate option symbol "-K" in the manifold part number and be sure to specify station positions for single or double wiring on the manifold specification sheet.

2. Wiring specifications
Connector terminal numbers are connected from solenoid station 1 on the A side in the order indicated by the arrows without skipping any terminal numbers.

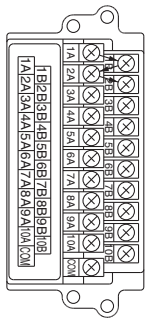

T VQC5000

Kit (Terminal block box kit) IP67 compliant

VV5QC51

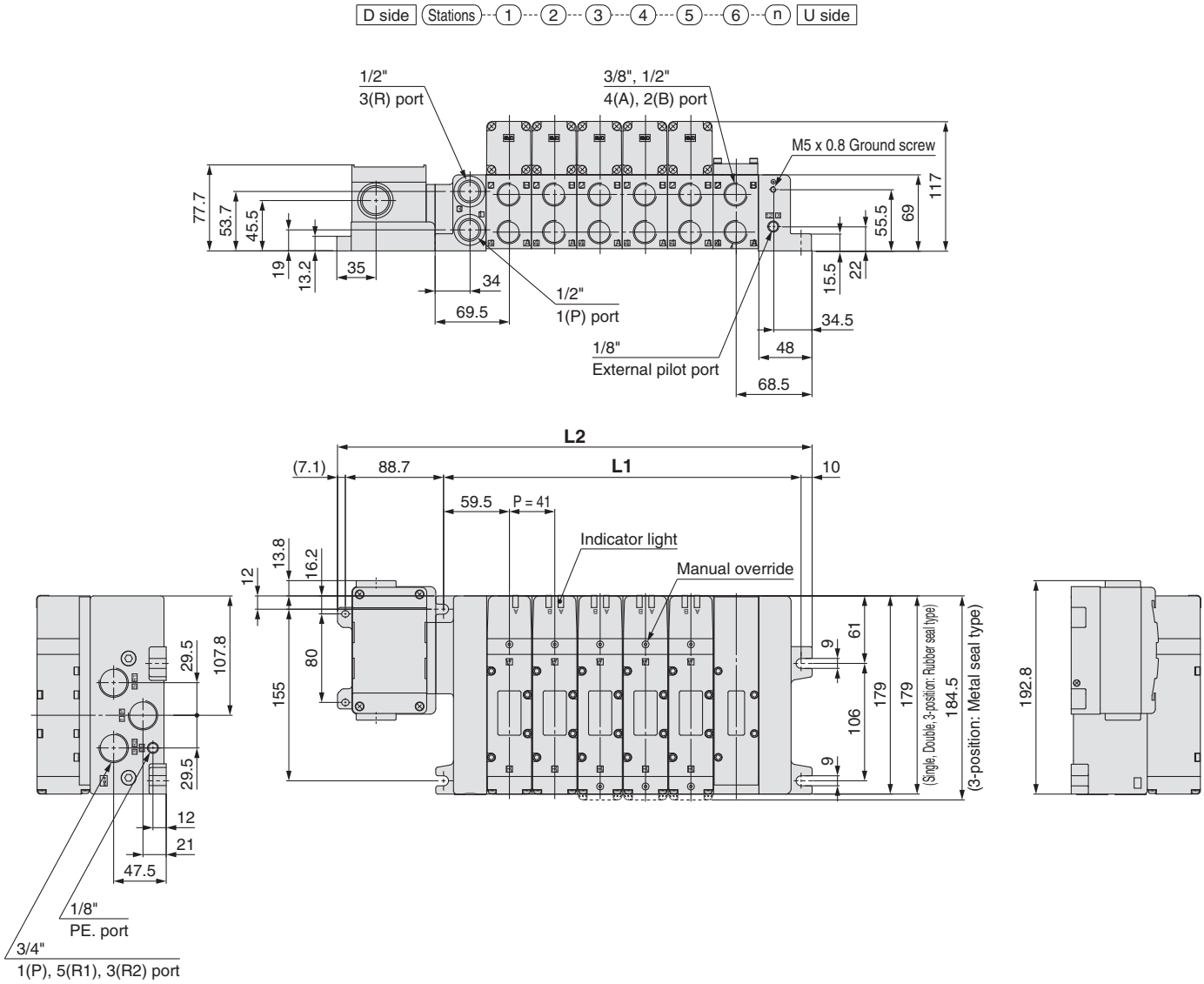

Dimensions

[mm]

L \ n	1	2	3	4	5	6	7	8	9	10	11	12
L1	118	159	200	241	282	323	364	405	446	487	528	569
L2	223.8	264.8	305.8	346.8	387.8	428.8	469.8	510.8	551.8	555.8	596.8	637.8

Formula: L1 = 41n + 77, L2 = 41n + 182.8 n: Stations (Maximum 12 stations)

L VQC5000

Kit (Lead wire kit) IP67 compliant

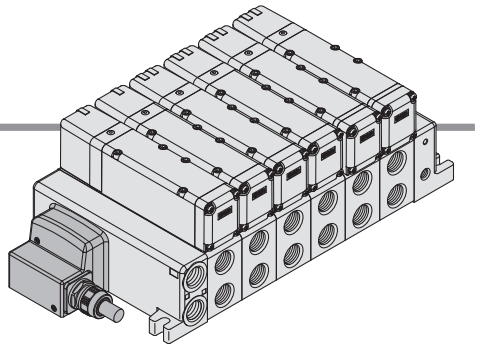

- **Direct electrical entry type**
- **IP67 enclosure is available with use of cables with sheath and waterproof connectors.**

Electrical Wiring Specifications

Lead wire specifications

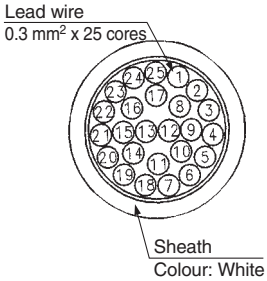

As the standard electrical wiring specification used is for 12 stations or less, double wiring (connected to SOL. A and SOL. B) is used for the internal wiring of each station regardless of valve and option types.
Mixed single and double wiring are available as options.
Refer to special wiring specifications (options) below.

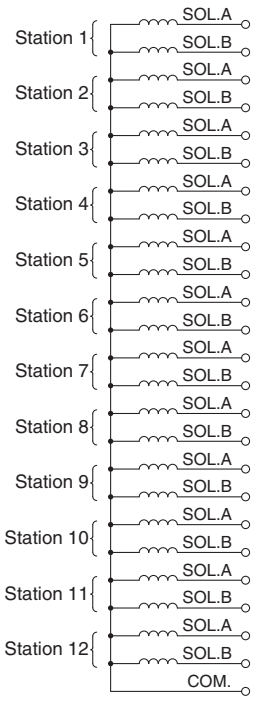

	Terminal no.	Lead wire colour	Dot marking
Station 1 SOL.A	1	Black	None
Station 1 SOL.B	14	Yellow	Black
Station 2 SOL.A	2	Brown	None
Station 2 SOL.B	15	Pink	Black
Station 3 SOL.A	3	Red	None
Station 3 SOL.B	16	Blue	White
Station 4 SOL.A	4	Orange	None
Station 4 SOL.B	17	Purple	None
Station 5 SOL.A	5	Yellow	None
Station 5 SOL.B	18	Grey	None
Station 6 SOL.A	6	Pink	None
Station 6 SOL.B	19	Orange	Black
Station 7 SOL.A	7	Blue	None
Station 7 SOL.B	20	Red	White
Station 8 SOL.A	8	Purple	White
Station 8 SOL.B	21	Brown	White
Station 9 SOL.A	9	Grey	Black
Station 9 SOL.B	22	Pink	Red
Station 10 SOL.A	10	White	Black
Station 10 SOL.B	23	Grey	Red
Station 11 SOL.A	11	White	Red
Station 11 SOL.B	24	Black	White
Station 12 SOL.A	12	Yellow	Red
Station 12 SOL.B	25	White	None
COM.	13	Orange	Red

Lead wire length

VV5QC51−08 C12 LD 0

Lead wire length

0	0.6 m
1	1.5 m
2	3.0 m

Electrical characteristics

Item	Characteristic
Conductor resistance Ω/km, 20 °C	65 or less
Withstand pressure V, 1 minute, AC	1000
Insulation resistance MΩ/km, 20 °C	5 or more

Note) Cannot be used for transfer wiring.
The minimum bending radius for cables is 20 mm.

Special Wiring Specifications (Option)

Mixed single and double wiring are available as options. The maximum number of manifold stations is determined by the number of solenoids. Count one point for a single solenoid type and two points for a double solenoid type. The total number of solenoids (points) must not exceed 24.

L VQC5000

Kit (Lead wire kit) IP67 compliant

VV5QC51

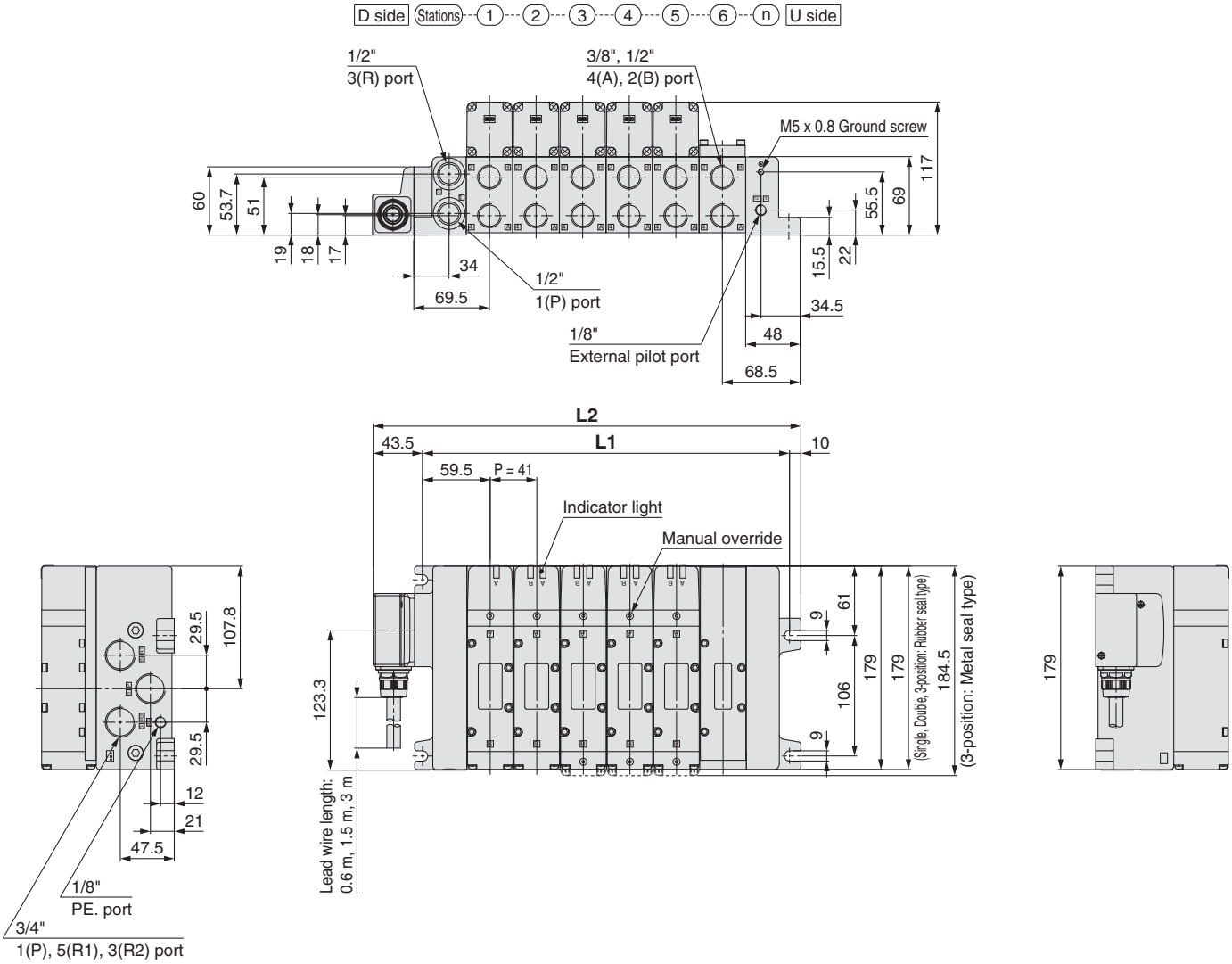

Dimensions

[mm]

L \ n	1	2	3	4	5	6	7	8	9	10	11	12
L1	118	159	200	241	282	323	364	405	446	487	528	569
L2	171.5	212.5	253.5	294.5	335.5	376.5	417.5	458.5	499.5	540.5	581.5	622.5

Formula: L1 = 41n + 77, L2 = 41n + 130.5 n: Stations (Maximum 12 stations)

M VQC5000

Kit (Circular connector kit) IP67 compliant

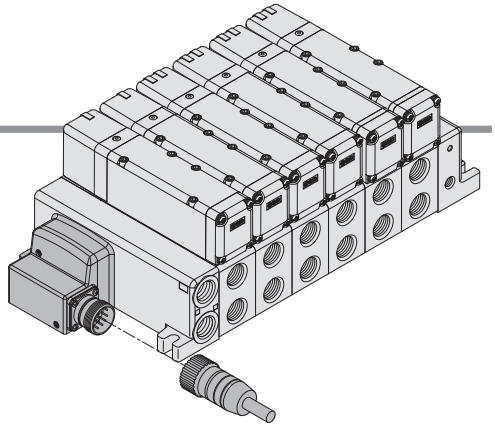

- **Use of circular connectors helps streamline wiring procedure to save labour.**
- **IP67 enclosure is available with use of waterproof multiple connectors.**

Electrical Wiring Specifications

Multiple connector

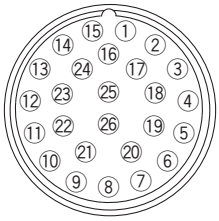

Double wiring (connected to SOL.A and SOL.B) is used for the internal wiring of each station regardless of valve and option types. Mixed single and double wiring are available as options. Refer to special wiring specifications (options) below.

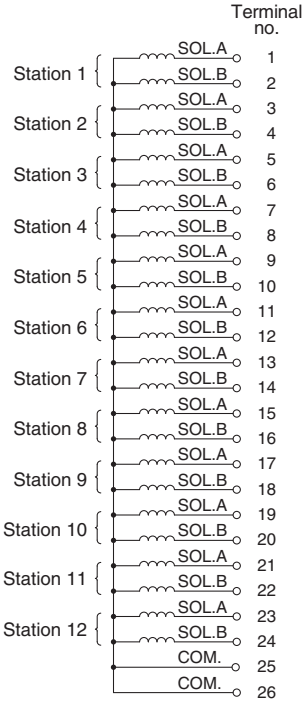

Special Wiring Specifications (Option)

Mixed single and double wiring are available as options. The maximum number of manifold stations is determined by the number of solenoids. Count one point for a single solenoid type and two points for a double solenoid type. The total number of solenoids (points) must not exceed 24.

Cable Assembly

AXT100-MC26-015 / 030 / 050

(Type 26P circular connector cable assemblies can be ordered with manifolds. Refer to manifolds ordering.)

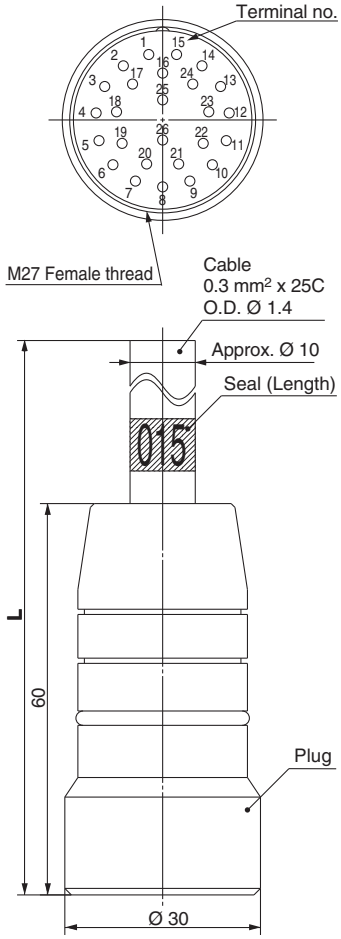

Lead wire colours for circular connector cable assembly terminal numbers

Terminal no.	Lead wire colour	Dot marking
1	Black	None
2	Brown	None
3	Red	None
4	Orange	None
5	Yellow	None
6	Pink	None
7	Blue	None
8	Purple	White
9	Grey	Black
10	White	Black
11	White	Red
12	Yellow	Red
13	Orange	Red
14	Yellow	Black
15	Pink	Black
16	Blue	White
17	Purple	None
18	Grey	None
19	Orange	Black
20	Red	White
21	Brown	White
22	Pink	Red
23	Grey	Red
24	Black	White
25	White	None
26	White	None

Electric characteristics

Item	Property
Conductor resistance Ω/km, 20 °C	65 or less
Voltage limit V, 1 minute, AC	1000
Insulation resistance MΩ/km, 20 °C	5 or more

Note) The minimum bending radius of the multiple connector cable is 20 mm.

Circular connector cable assemblies

Cable length (L)	Assembly part no.
	26P
1.5 m	AXT100-MC26-015
3 m	AXT100-MC26-030
5 m	AXT100-MC26-050

∗ Cannot be used for transfer wiring.
∗ Lengths other than the above is also available. Please contact SMC for details.

M VQC5000

Kit (Circular connector kit) IP67 compliant

VV5QC51

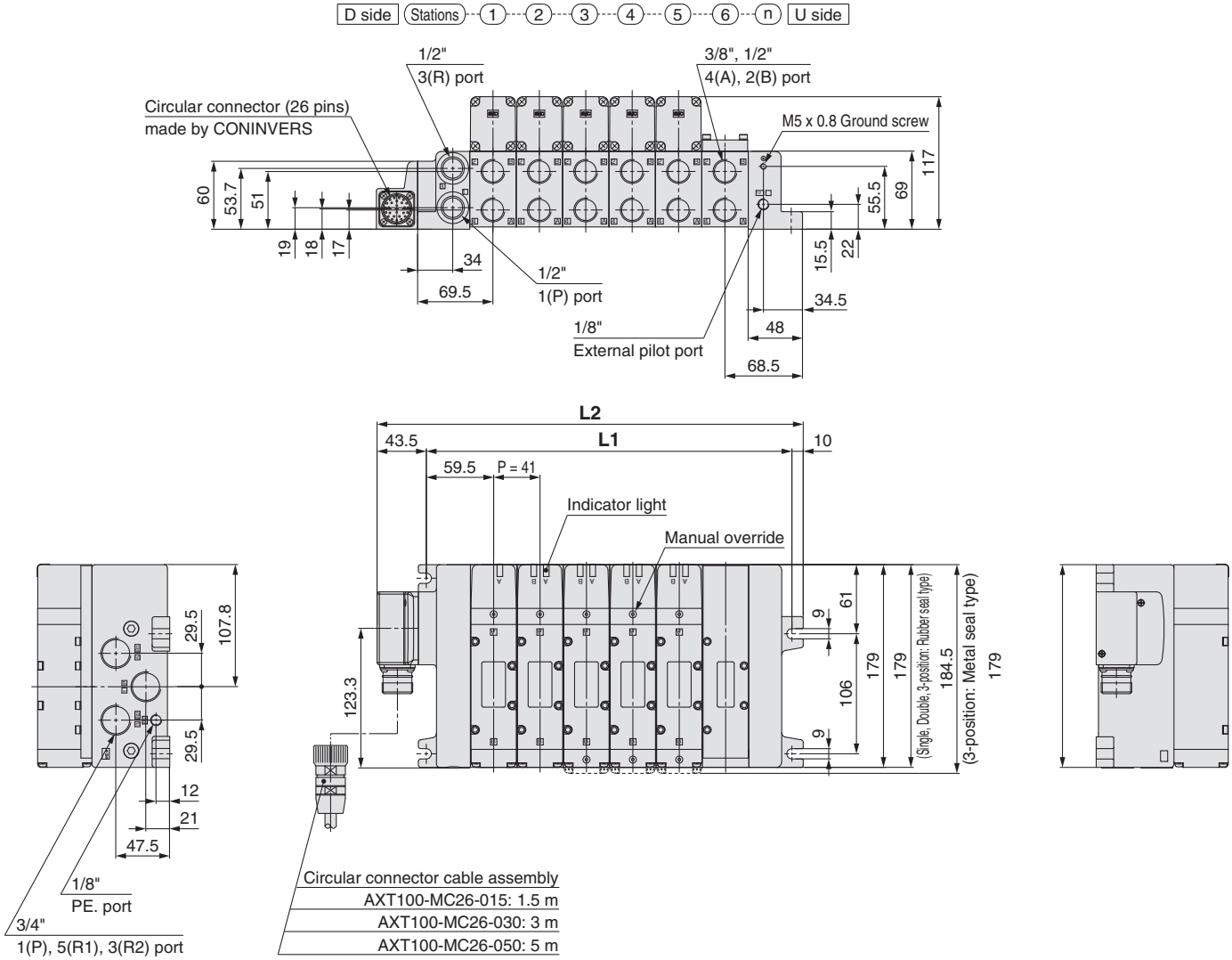

Dimensions

[mm]

L \ n	1	2	3	4	5	6	7	8	9	10	11	12
L1	118	159	200	241	282	323	364	405	446	487	528	569
L2	171.5	212.5	253.5	294.5	335.5	376.5	417.5	458.5	499.5	540.5	581.5	622.5

Formula: L1 = 41n + 77, L2 = 41n + 130.5 n: Stations (Maximum 12 stations)

Construction

Plug-in Unit

Metal seal type

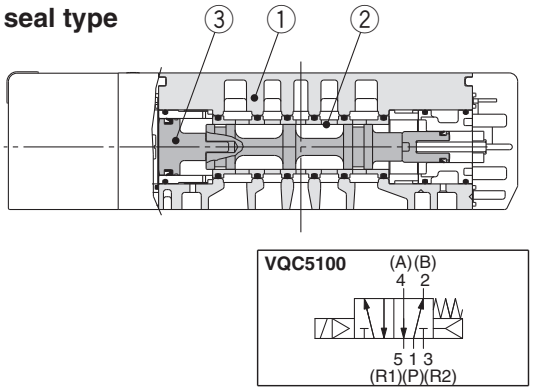

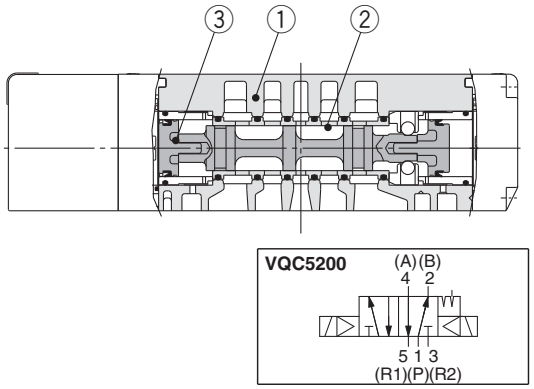

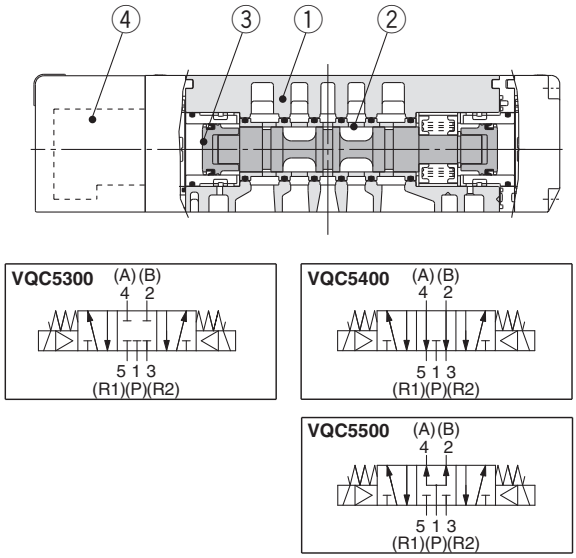

Component Parts

No.	Description	Material	Note
1	**Body**	Aluminium die-casted	
2	**Spool/Sleeve**	Stainless steel	
3	**Piston**	Resin	

Replacement Parts

4	Pilot valve assembly	V118□-□ (A / B / E) **Coil type** — Standard (0.95 W) Y Low wattage type (0.4 W)	□: Coil rated voltage Example) 24 V DC: 5 A: Single/With light B: Double, 3-position/With light E: Single, Double, 3-position/ Without light

Rubber seal type

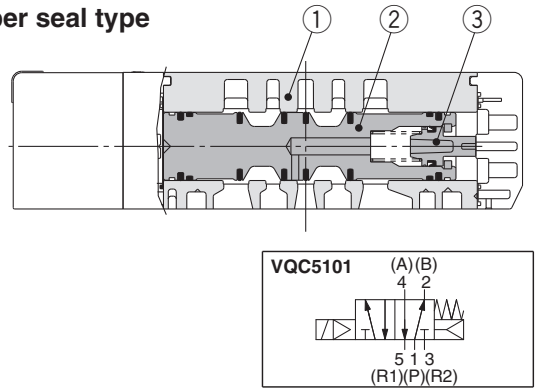

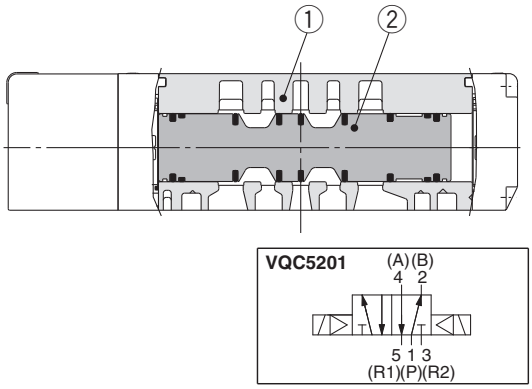

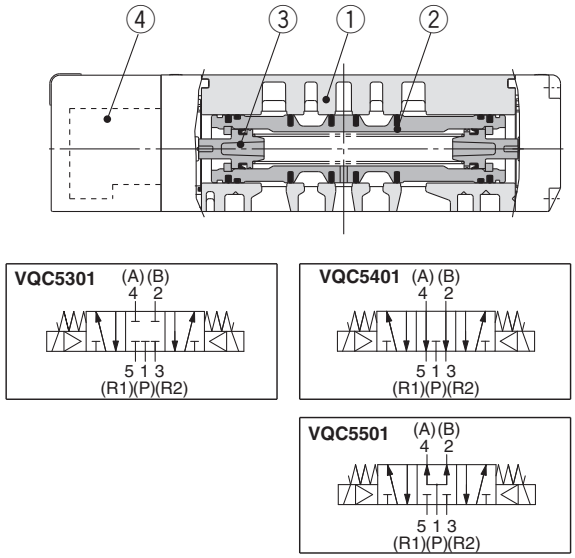

Component Parts

No.	Description	Material	Note
1	**Body**	Aluminium die-casted	
2	**Spool valve**	Aluminium, HNBR	
3	**Piston**	Resin	

Replacement Parts

4	Pilot valve assembly	V118□-□ (A / B / E) **Coil type** — Standard (0.95 W) Y Low wattage type (0.4 W)	□: Coil rated voltage Example) 24 V DC: 5 A: Single/With light B: Double, 3-position/With light E: Single, Double, 3-position/ Without light

Exploded View of Manifold

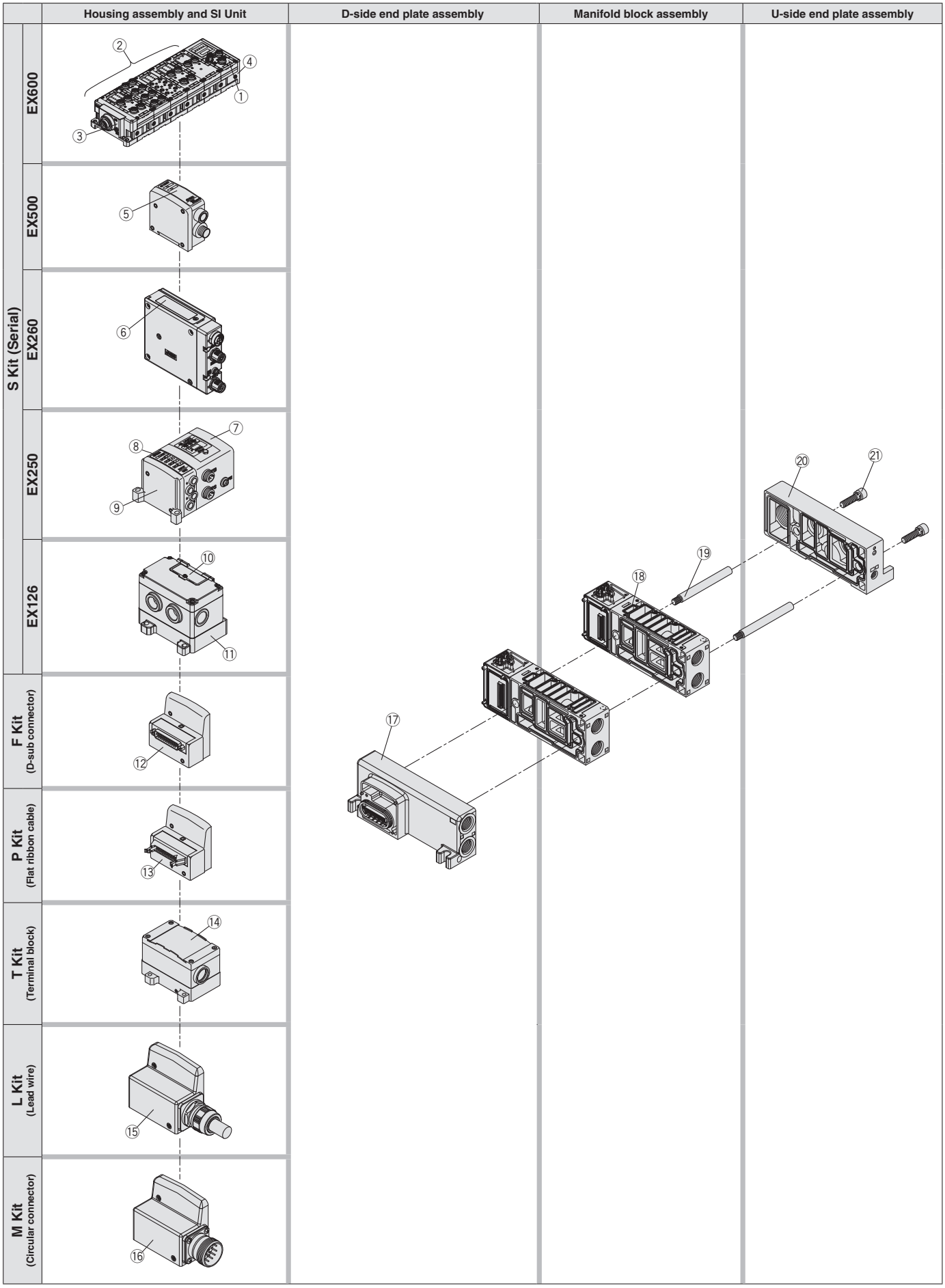

Manifold Assembly Part No.

Housing Assembly and SI Unit/Input Block

No.	Description	Part no.	Note
1	SI Unit	EX600-SDN1A	DeviceNet™, Negative common (PNP)
		EX600-SDN2A	DeviceNet™, Positive common (NPN)
		EX600-SMJ1	CC-Link, Negative common (PNP)
		EX600-SMJ2	CC-Link, Positive common (NPN)
		EX600-SPR1A	PROFIBUS DP, Negative common (PNP)
		EX600-SPR2A	PROFIBUS DP, Positive common (NPN)
		EX600-SEN1	EtherNet/IP™ (1 port), Negative common (PNP)
		EX600-SEN2	EtherNet/IP™ (1 port), Positive common (NPN)
		EX600-SEN3	EtherNet/IP™ (2 port), Negative common (PNP)
		EX600-SEN4	EtherNet/IP™ (2 port), Positive common (NPN)
		EX600-SEC1	EtherCAT®, Negative common (PNP)
		EX600-SEC2	EtherCAT®, Positive common (NPN)
		EX600-SPN1	PROFINET, Negative common (PNP)
		EX600-SPN2	PROFINET, Positive common (NPN)
		EX600-WEN1 Note)	Base module EtherNet/IP™, Negative common (PNP)
		EX600-WEN2 Note)	Base module EtherNet/IP™, Positive common (NPN))
		EX600-WPN1 Note)	Base module PROFINET, Negative common (PNP)
		EX600-WPN2 Note)	Base module PROFINET, Positive common (NPN)
		EX600-WSV1 Note)	Remote module, Negative common (PNP)
		EX600-WSV2 Note)	Remote module, Positive common (NPN)
2	Digital Input Unit	EX600-DXNB	NPN input, M12 connector, 5 pins (4 pcs.), 8 inputs
		EX600-DXPB	PNP input, M12 connector, 5 pins (4 pcs.), 8 inputs
		EX600-DXNC	NPN input, M8 connector, 3 pins (8 pcs.), 8 inputs
		EX600-DXNC1	NPN input, M8 connector, 3 pins (8 pcs.), 8 inputs, with open circuit detection
		EX600-DXPC	PNP input, M8 connector, 3 pins (8 pcs.), 8 inputs
		EX600-DXPC1	PNP input, M8 connector, 3 pins (8 pcs.), 8 inputs, with open circuit detection
		EX600-DXND	NPN input, M12 connector, 5 pins (8 pcs.), 16 inputs
		EX600-DXPD	PNP input, M12 connector, 5 pins (8 pcs.), 16 inputs
		EX600-DXNE	NPN input, D-sub connector, 25 pins, 16 inputs
		EX600-DXPE	PNP input, D-sub connector, 25 pins, 16 inputs
		EX600-DXNF	NPN input, Spring type terminal box, 32 pins, 16 inputs
		EX600-DXPF	PNP input, Spring type terminal box, 32 pins, 16 inputs
	Digital Output Unit	EX600-DYNB	NPN output, M12 connector, 5 pins (4 pcs.), 8 outputs
		EX600-DYPB	PNP output, M12 connector, 5 pins (4 pcs.), 8 outputs
		EX600-DYNE	NPN output, D-sub connector, 25 pins, 16 outputs
		EX600-DYPE	PNP output, D-sub connector, 25 pins, 16 outputs
		EX600-DYNF	NPN output, Spring type terminal box, 32 pins, 16 outputs
		EX600-DYPF	PNP output, Spring type terminal box, 32 pins, 16 outputs
	Digital Input/Output Unit	EX600-DMNE	NPN input/output, D-sub connector, 25 pins, 8 inputs/outputs
		EX600-DMPE	PNP input/output, D-sub connector, 25 pins, 8 inputs/outputs
		EX600-DMNF	NPN input/output, Spring type terminal box, 32 pins, 8 inputs/outputs
		EX600-DMPF	PNP input/output, Spring type terminal box, 32 pins, 8 inputs/outputs
	Analogue Input Unit	EX600-AXA	M12 connector, 5 pins (2 pcs.), 2-channel input
	Analogue Output Unit	EX600-AYA	M12 connector, 5 pins (2 pcs.), 2-channel output
	Analogue Input/Output Unit	EX600-AMB	M12 connector, 5 pins (4 pcs.), 2-channel input/output
3	End plate	EX600-ED2	M12 connector, 5 pins, Max. supply current 2 A
		EX600-ED2-2	M12 connector, 5 pins, Max. supply current 2 A, with DIN rail mounting bracket
		EX600-ED3	7/8 inch connector, 5 pins, Max. supply current 8 A
		EX600-ED3-2	7/8 inch connector, 5 pins, Max. supply current 8 A, with DIN rail mounting bracket
		EX600-ED4	M12 connector, (4 pins/5 pins) IN/OUT
		EX600-ED4-2	M12 connector, (4 pins/5 pins) IN/OUT, with DIN rail mounting bracket
		EX600-ED5	M12 connector, (4 pins/5 pins) IN/OUT
		EX600-ED5-2	M12 connector, (4 pins/5 pins) IN/OUT, with DIN rail mounting bracket
4	Valve plate	EX600-ZMV1	Enclosed parts: Round head screws (M4 x 6) 2 pcs., Round head screws (M3 x 8) 4 pcs.
5	SI Unit	EX500-S103	EtherNet/IP™, PROFINET, Negative common (PNP)
		EX500-Q001	DeviceNet™, PROFIBUS DP, EtherNet/IP™, Positive common (NPN)
		EX500-Q101	DeviceNet™, PROFIBUS DP, EtherNet/IP™, Negative common (PNP)

Note) The wireless system is suitable for use only in a country where it is in accordance with the Radio Act and regulations of that country.

Manifold Assembly Part No.

Housing Assembly and SI Unit/Input Block

No.	Description	Part no.	Note
6	SI Unit	EX260-SDN1	DeviceNet™, M12 connector, 32 outputs, Negative common (PNP)
		EX260-SDN2	DeviceNet™, M12 connector, 32 outputs, Positive common (NPN)
		EX260-SDN3	DeviceNet™, M12 connector, 16 outputs, Negative common (PNP)
		EX260-SDN4	DeviceNet™, M12 connector, 16 outputs, Positive common (NPN)
		EX260-SRP1	PROFIBUS DP, M12 connector, 32 outputs, Negative common (PNP)
		EX260-SRP2	PROFIBUS DP, M12 connector, 32 outputs, Positive common (NPN)
		EX260-SRP3	PROFIBUS DP, M12 connector, 16 outputs, Negative common (PNP)
		EX260-SRP4	PROFIBUS DP, M12 connector, 16 outputs, Positive common (NPN)
		EX260-SRP5	PROFIBUS DP, D-sub connector, 32 outputs, Negative common (PNP)
		EX260-SRP6	PROFIBUS DP, D-sub connector, 32 outputs, Positive common (NPN)
		EX260-SRP7	PROFIBUS DP, D-sub connector, 16 outputs, Negative common (PNP)
		EX260-SRP8	PROFIBUS DP, D-sub connector, 16 outputs, Positive common (NPN)
		EX260-SMJ1	CC-Link, M12 connector, 32 outputs, Negative common (PNP)
		EX260-SMJ2	CC-Link, M12 connector, 32 outputs, Positive common (NPN)
		EX260-SMJ3	CC-Link, M12 connector, 16 outputs, Negative common (PNP)
		EX260-SMJ4	CC-Link, M12 connector, 16 outputs, Positive common (NPN)
		EX260-SEC1	EtherCAT®, M12 connector, 32 outputs, Negative common (PNP)
		EX260-SEC2	EtherCAT®, M12 connector, 32 outputs, Positive common (NPN)
		EX260-SEC3	EtherCAT®, M12 connector, 16 outputs, Negative common (PNP)
		EX260-SEC4	EtherCAT®, M12 connector, 16 outputs, Positive common (NPN)
		EX260-SPN1	PROFINET, M12 connector, 32 outputs, Negative common (PNP)
		EX260-SPN2	PROFINET, M12 connector, 32 outputs, Positive common (NPN)
		EX260-SPN3	PROFINET, M12 connector, 16 outputs, Negative common (PNP)
		EX260-SPN4	PROFINET, M12 connector, 16 outputs, Positive common (NPN)
		EX260-SEN1	EtherNet/IP™, M12 connector, 32 outputs, Negative common (PNP)
		EX260-SEN2	EtherNet/IP™, M12 connector, 32 outputs, Positive common (NPN)
		EX260-SEN3	EtherNet/IP™, M12 connector, 16 outputs, Negative common (PNP)
		EX260-SEN4	EtherNet/IP™, M12 connector, 16 outputs, Positive common (NPN)
		EX260-SPL1	EtherNet POWERLINK, M12 connector, 32 outputs, Negative common (PNP)
		EX260-SPL3	EtherNet POWERLINK, M12 connector, 16 outputs, Negative common (PNP)
7	SI Unit	EX250-SPR1	PROFIBUS DP, Negative common (PNP)
		EX250-SMJ2	CC-Link, Positive common (NPN)
		EX250-SAS3	AS-Interface, 8 in/8 out, 31 slave modes, 2 power supply systems, Negative common (PNP)
		EX250-SAS5	AS-Interface, 4 in/4 out, 31 slave modes, 2 power supply systems, Negative common (PNP)
		EX250-SAS7	AS-Interface, 8 in/8 out, 31 slave modes, 1 power supply system, Negative common (PNP)
		EX250-SAS9	AS-Interface, 4 in/4 out, 31 slave modes, 1 power supply system, Negative common (PNP)
		EX250-SCA1A	CANopen, Negative common (PNP)
		EX250-SDN1	DeviceNet™, Negative common (PNP)
		EX250-SEN1	EtherNet/IP™, Negative common (PNP)
8	Input block	EX250-IE1	M12, 2 inputs
		EX250-IE2	M12, 4 inputs
		EX250-IE3	M8, 4 inputs
9	End plate assembly	EX250-EA1	Direct mounting
		EX250-EA2	DIN rail mounting
10	SII Unit	EX126D-SMJ1	CC-Link, Positive common (NPN)
11	Terminal block plate	VVQC1000-74A-2	For EX126 SI Unit mounting
12	D-sub connector housing assembly	VVQC1000-F25-1	F kit, 25 pins
13	Flat ribbon cable housing assembly	VVQC1000-P26-1	P kit, 26 pins
		VVQC1000-P20-1	P kit, 20 pins
14	Terminal block box housing assembly	VVQC1000-T0-1	T kit
15	Lead wire housing assembly	VVQC1000-L25-0-1	L kit with 0.6 m lead wire
		VVQC1000-L25-1-1	L kit with 1.5 m lead wire
		VVQC1000-L25-2-1	L kit with 3.0 m lead wire
16	Circular connector housing assembly	VVQC1000-M26-1	M kit, 26 pins

Manifold Assembly Part No.

Housing Assembly and SI Unit/Input Block

Refer to pages 33 and 34 in this catalogue.

D-side end plate assembly

⑰ **D-side end plate assembly part no.**

VVQC5000-3A-2 □

Thread type

—	Rc
F	G
T	NPTF
N	NPT

U-side end plate assembly

⑳ **U-side end plate assembly part no.**

VVQ5000-2A-1 □ -L-W

Thread type

—	Rc
F	G
T	NPTF
N	NPT

Mounting screw – U-side

㉑ **Screw part no.**

AXT632-60-3	M8 x 30

Manifold block assembly

⑱ **Manifold block assembly part no.**

VVQC5000-1 A - D - □ □

Type

A	For 1 station

Note) Tie-rods (2 pcs.) for additional stations included.

Wiring specifications

D	Double wiring
S	Single wiring

Port size

Symbol	Port size
03	3/8"
04	1/2"
B	1/2" bottom ported

Thread type (Thread port only)

—	Rc
F	G
T	NPTF
N	NPT

Replacement Parts

VQC5000	Pilot valve assembly	V118□-□ A B E **Coil type** — Standard (0.95 W) Y Low wattage type (0.4 W)	□: Coil rated voltage Example) 24 V DC: 5 A: Single/With light B: Double, 3-position/With light E: Single, Double, 3-position/ Without light

⑲ **Tie-rod assembly part no. (2 units)**

VQC5000	VVQC5000-TR-□

Note 1) Please order when reducing the number of manifold stations. When increasing the number of stations, additional orders are not required since they are included in the manifold block assembly.
Note 2) Number of stations, 02 to 16

List of Valves, Options, and Mounting Bolts

Number of options	Valve and options	Bolt part no.	Q'ty (pcs.)	Note	Option mounting diagram
0	Single valve	AXT632-25-4 (M4 x 50)	4		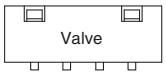
	Blanking plate (VVQ5000-10A-$\frac{1}{5}$)	AXT632-25-8 (M4 x 17)	4	For manifold	
1	Valve + Individual SUP spacer (VVQ5000-P-$\frac{1}{5}$ - $\frac{03}{04}$)	① AXT632-25-5 (M4 x 82)	4	For manifold	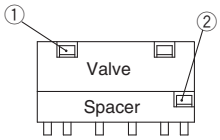
		② AXT632-25-10 (M4 x 34)	2		
	Valve + Individual EXH spacer (VVQ5000-R-$\frac{1}{5}$ - $\frac{03}{04}$)	① AXT632-25-5 (M4 x 82)	4	For manifold	
		② AXT632-25-10 (M4 x 34)	2		
	Valve + Restrictor spacer (VVQ5000-20A-$\frac{1}{5}$)	① AXT632-25-5 (M4 x 82)	4		
		② AXT632-25-10 (M4 x 34)	2	Not necessary when mounting the sub-plate.	
	Valve + Release valve spacer (VVQ5000-24A-$\frac{1}{5}$D)	① AXT632-25-5 (M4 x 82)	4	For manifold	
		② AXT632-25-10 (M4 x 34)	2		
	Valve + Double check spacer with residual pressure exhaust (VVQ5000-25A-$\frac{1}{5}$)	① AXT632-25-6 (M4 x 114)	4		
		② AXT632-66-1 (M4 x 64)	2	Not necessary when mounting the sub-plate.	
	Valve + SUP stop valve spacer (VVQ5000-37A-$\frac{1}{5}$)	① AXT632-25-5 (M4 x 82)	4		
		② AXT632-25-10 (M4 x 34)	2	Not necessary when mounting the sub-plate.	
	Valve + Interface regulator (ARBQ5000-00$\frac{A}{B}$ - $\frac{1}{5}$)	① AXT632-25-6 (M4 x 114)	4		
		② AXT632-66-1 (M4 x 64)	2	Not necessary when mounting the sub-plate.	
	Blanking plate + SUP stop valve (Top) (Bottom)	① AXT632-25-4 (M4 x 50)	4	For manifold	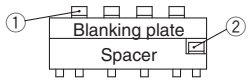
		② AXT632-25-10 (M4 x 34)	2		
2	Valve + Individual SUP + Individual EXH (Top) (Bottom) (Bottom) (Top)	① AXT632-25-6 (M4 x 114)	4	For manifold	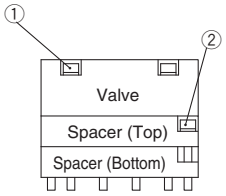
		② AXT632-25-11 (M4 x 66)	2		
	Valve + Restrictor + Individual SUP or Individual EXH (Top) (Top) (Bottom) (Bottom)	① AXT632-25-6 (M4 x 114)	4	For manifold ∗ The individual EXH cannot be mounted on the top.	
		② AXT632-25-11 (M4 x 66)	2		
	Valve + SUP stop valve + Individual SUP, (Top) Individual EXH or Restrictor (Bottom)	① AXT632-25-6 (M4 x 114)	4	For manifold	
		② AXT632-25-11 (M4 x 66)	2		
	Valve + Double check spacer with residual pressure exhaust + Individual SUP or Individual EXH (Top) (Bottom)	① AXT632-25-7 (M4 x 146)	4	For manifold	
		② AXT632-66-2 (M4 x 96)	2		
	Valve + Interface regulator + Double check spacer with (Top) residual pressure exhaust (Bottom)	① AXT632-25-14 (M4 x 178)	4	For manifold	
		② AXT632-66-3 (M4 x 128)	2		
	Valve + Interface regulator + Individual SUP, (Top) Individual EXH or Restrictor (Bottom)	① AXT632-25-7 (M4 x 146)	4	For manifold ∗ The individual EXH and restrictor cannot be mounted on the top.	
		② AXT632-66-2 (M4 x 96)	2		
	Blanking plate + SUP stop valve (Top) + Individual SUP (Bottom)	① AXT632-25-5 (M4 x 82)	4	For manifold	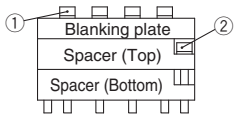
		② AXT632-25-11 (M4 x 66)	2		
3	Valve + SUP stop valve (Top) + Individual SUP (Middle, Bottom) + Individual EXH (Middle, Bottom)	① AXT632-25-7 (M4 x 146)	4	For manifold	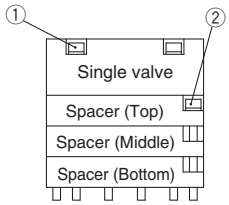
		② AXT632-25-12 (M4 x 98)	2		
	Valve + Double check spacer with residual pressure exhaust (Top) + Individual SUP (Middle, Bottom) + Individual EXH (Middle, Bottom)	① AXT632-25-14 (M4 x 178)	4	For manifold	
		② AXT632-66-3 (M4 x 128)	2		
	Valve + Spacer (Top): Interface regulator Spacer (Middle): "Individual SUP or Individual EXH"/"Restrictor" Spacer (Bottom): "Restrictor"/"Individual SUP or Individual EXH"	① AXT632-25-14 (M4 x 178)	4	For manifold ∗ The individual EXH and restrictor cannot be mounted on the top.	
		② AXT632-66-3 (M4 x 128)	2		

Note) When the SUP stop valve and individual SUP are mounted, the stop valve is mounted on the top of the individual SUP.

Series VQC5000
Specific Product Precautions 1

Be sure to read this before handling. Refer to the back cover for Safety Instructions. For 3/4/5 Port Solenoid Valve Precautions, refer to "Handling Precautions for SMC Products" and the Operation Manual on the SMC website, http://www.smc.eu

Continuous Duty

⚠ Warning

When the product is continuously energised for a long period of time (10 minutes or longer), select the low wattage type (DC specification). The AC type cannot be continuously energised for 10 minutes or longer. If anything is unclear, please contact SMC.

Manual Override

⚠ Warning

Since connected equipment will operate when the manual override is activated, confirm that conditions are safe prior to activation.

■ VQC5000

Push type (Tool required)

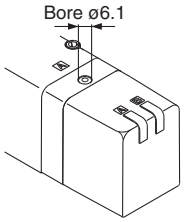

Push down the manual override button with a small screwdriver, etc., until it stops.
The manual override will return when released.

Locking type (Tool required)

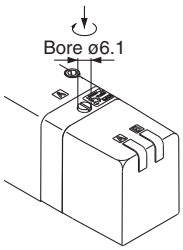

Push down the manual override button with a small flat head screwdriver until it stops, and turn it clockwise 90° to lock it. Turn it counterclockwise to release it.

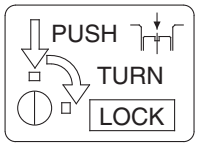

Locking type (Manual)

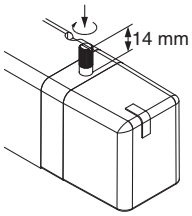

Push down the manual override button with a small flat head screwdriver or with your finger until it stops, and turn it clockwise 90° to lock it. Turn it counterclockwise to release it.

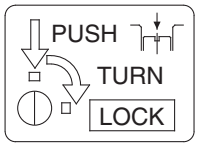

⚠ Caution
Do not apply excessive torque when turning the locking type manual override. (0.1 N·m or less)

Valve Mounting

⚠ Caution

After confirming that the gasket is installed correctly, securely tighten the mounting screws according to the tightening torque shown below.

Proper tightening torque [N·m]
1 to 1.8

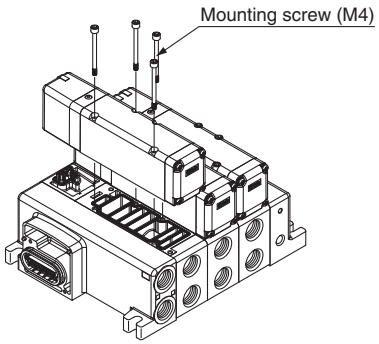

Lead Wire Connection

⚠ Caution

Plug-in sub-plate (With terminal block)

- If the junction cover ① of the sub-plate is removed, you can see the plug-in type terminal block ② mounted inside the sub-plate.

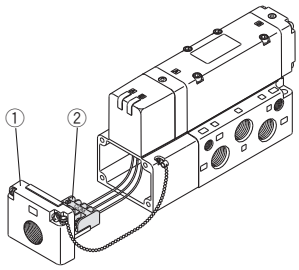

- The terminal block is marked as follows. Connect wiring to each of the power supply terminals.

Terminal block marking / Model	A	COM	B	⏚
VQC510$^{0}_{1}$	A side	COM	—	—
VQC520$^{0}_{1}$	A side	COM	B side	—
VQC5$^{3}_{4}_{5}_{6}$0$^{0}_{1}$	A side	COM	B side	—

Note 1) There is no polarity. It can also be used as –COM.
Note 2) The sub-plate is double wired even for the VQC510$^{0}_{1}$.

- Applicable terminal: 1.25-3s, 1.25Y-3, 1.25Y-3N, 1.25Y-3.5

⚠ Safety Instructions

These safety instructions are intended to prevent hazardous situations and/or equipment damage. These instructions indicate the level of potential hazard with the labels of **"Caution," "Warning"** or **"Danger."** They are all important notes for safety and must be followed in addition to International Standards (ISO/IEC)*1), and other safety regulations.

⚠ Caution: **Caution** indicates a hazard with a low level of risk which, if not avoided, could result in minor or moderate injury.

⚠ Warning: **Warning** indicates a hazard with a medium level of risk which, if not avoided, could result in death or serious injury.

⚠ Danger : **Danger** indicates a hazard with a high level of risk which, if not avoided, will result in death or serious injury.

*1) ISO 4414: Pneumatic fluid power – General rules relating to systems.
ISO 4413: Hydraulic fluid power – General rules relating to systems.
IEC 60204-1: Safety of machinery – Electrical equipment of machines. (Part 1: General requirements)
ISO 10218-1: Manipulating industrial robots - Safety.
etc.

⚠ Warning

1. **The compatibility of the product is the responsibility of the person who designs the equipment or decides its specifications.**
   Since the product specified here is used under various operating conditions, its compatibility with specific equipment must be decided by the person who designs the equipment or decides its specifications based on necessary analysis and test results. The expected performance and safety assurance of the equipment will be the responsibility of the person who has determined its compatibility with the product. This person should also continuously review all specifications of the product referring to its latest catalogue information, with a view to giving due consideration to any possibility of equipment failure when configuring the equipment.
2. **Only personnel with appropriate training should operate machinery and equipment.**
   The product specified here may become unsafe if handled incorrectly. The assembly, operation and maintenance of machines or equipment including our products must be performed by an operator who is appropriately trained and experienced.
3. **Do not service or attempt to remove product and machinery/equipment until safety is confirmed.**
   1. The inspection and maintenance of machinery/equipment should only be performed after measures to prevent falling or runaway of the driven objects have been confirmed.
   2. When the product is to be removed, confirm that the safety measures as mentioned above are implemented and the power from any appropriate source is cut, and read and understand the specific product precautions of all relevant products carefully.
   3. Before machinery/equipment is restarted, take measures to prevent unexpected operation and malfunction.
4. **Contact SMC beforehand and take special consideration of safety measures if the product is to be used in any of the following conditions.**
   1. Conditions and environments outside of the given specifications, or use outdoors or in a place exposed to direct sunlight.
   2. Installation on equipment in conjunction with atomic energy, railways, air navigation, space, shipping, vehicles, military, medical treatment, combustion and recreation, or equipment in contact with food and beverages, emergency stop circuits, clutch and brake circuits in press applications, safety equipment or other applications unsuitable for the standard specifications described in the product catalogue.
   3. An application which could have negative effects on people, property, or animals requiring special safety analysis.
   4. Use in an interlock circuit, which requires the provision of double interlock for possible failure by using a mechanical protective function, and periodical checks to confirm proper operation.

Limited warranty and Disclaimer/ Compliance Requirements

The product used is subject to the following "Limited warranty and Disclaimer" and "Compliance Requirements".
Read and accept them before using the product.

Limited warranty and Disclaimer

1. The warranty period of the product is 1 year in service or 1.5 years after the product is delivered, wichever is first.*2) Also, the product may have specified durability, running distance or replacement parts. Please consult your nearest sales branch.
2. For any failure or damage reported within the warranty period which is clearly our responsibility, a replacement product or necessary parts will be provided. This limited warranty applies only to our product independently, and not to any other damage incurred due to the failure of the product.
3. Prior to using SMC products, please read and understand the warranty terms and disclaimers noted in the specified catalogue for the particular products.

*2) **Vacuum pads are excluded from this 1 year warranty.**
A vacuum pad is a consumable part, so it is warranted for a year after it is delivered. Also, even within the warranty period, the wear of a product due to the use of the vacuum pad or failure due to the deterioration of rubber material are not covered by the limited warranty.

Compliance Requirements

1. The use of SMC products with production equipment for the manufacture of weapons of mass destruction (WMD) or any other weapon is strictly prohibited.
2. The exports of SMC products or technology from one country to another are governed by the relevant security laws and regulations of the countries involved in the transaction. Prior to the shipment of a SMC product to another country, assure that all local rules governing that export are known and followed.

⚠ Caution

1. **The product is provided for use in manufacturing industries.**
   The product herein described is basically provided for peaceful use in manufacturing industries.
   If considering using the product in other industries, consult SMC beforehand and exchange specifications or a contract if necessary.
   If anything is unclear, contact your nearest sales branch.

⚠ Caution

SMC products are not intended for use as instruments for legal metrology.
Measurement instruments that SMC manufactures or sells have not been qualified by type approval tests relevant to the metrology (measurement) laws of each country. Therefore, SMC products cannot be used for business or certification ordained by the metrology (measurement) laws of each country.

⚠ Safety Instructions Be sure to read "Handling Precautions for SMC Products" (M-E03-3) before using.

SMC Corporation (Europe)

Austria	☎+43 (0)2262622800	www.smc.at	office@smc.at
Belgium	☎+32 (0)33551464	www.smc.be	info@smc.be
Bulgaria	☎+359 (0)2807670	www.smc.bg	office@smc.bg
Croatia	☎+385 (0)13707288	www.smc.hr	office@smc.hr
Czech Republic	☎+420 541424611	www.smc.cz	office@smc.cz
Denmark	☎+45 70252900	www.smcdk.com	smc@smcdk.com
Estonia	☎+372 6510370	www.smcpneumatics.ee	smc@smcpneumatics.ee
Finland	☎+358 207513513	www.smc.fi	smcfi@smc.fi
France	☎+33 (0)164761000	www.smc-france.fr	info@smc-france.fr
Germany	☎+49 (0)61034020	www.smc.de	info@smc.de
Greece	☎+30 210 2717265	www.smchellas.gr	sales@smchellas.gr
Hungary	☎+36 23513000	www.smc.hu	office@smc.hu
Ireland	☎+353 (0)14039000	www.smcpneumatics.ie	sales@smcpneumatics.ie
Italy	☎+39 0292711	www.smcitalia.it	mailbox@smcitalia.it
Latvia	☎+371 67817700	www.smc.lv	info@smc.lv
Lithuania	☎+370 5 2308118	www.smclt.lt	info@smclt.lt
Netherlands	☎+31 (0)205318888	www.smc.nl	info@smc.nl
Norway	☎+47 67129020	www.smc-norge.no	post@smc-norge.no
Poland	☎+48 222119600	www.smc.pl	office@smc.pl
Portugal	☎+351 226166570	www.smc.eu	postpt@smc.smces.es
Romania	☎+40 213205111	www.smcromania.ro	smcromania@smcromania.ro
Russia	☎+7 8127185445	www.smc-pneumatik.ru	info@smc-pneumatik.ru
Slovakia	☎+421 (0)413213212	www.smc.sk	office@smc.sk
Slovenia	☎+386 (0)73885412	www.smc.si	office@smc.si
Spain	☎+34 945184100	www.smc.eu	post@smc.smces.es
Sweden	☎+46 (0)86031200	www.smc.nu	post@smc.nu
Switzerland	☎+41 (0)523963131	www.smc.ch	info@smc.ch
Turkey	☎+90 212 489 0 440	www.smcpnomatik.com.tr	info@smcpnomatik.com.tr
UK	☎+44 (0)845 121 5122	www.smc.uk	sales@smc.uk

SMC CORPORATION Akihabara UDX 15F, 4-14-1, Sotokanda, Chiyoda-ku, Tokyo 101-0021, JAPAN Phone: 03-5207-8249 FAX: 03-5298-5362

1st printing XO printing XO 00 Printed in Spain

Specifications are subject to change without prior notice and any obligation on the part of the manufacturer.