Electric Actuator

High Performance Rod Type

Battery-less Absolute (Step Motor 24 VDC)

New

CE UKCA c UL us

* Excludes auto switches

For details, refer to page 49.

RoHS

Reduces cycle time

Cycle time	**Reduced by 33%** (**0.65 s** ← 0.97 s) **compared with the existing model**[*1] *1 When LEY25GA-300 is operated from 0 to 300 mm (stroke)
Acceleration/ Deceleration	**10000 mm/s²** (**334**% increase compared with the existing model)
Max. speed	**700 mm/s** (Improved by **40**% compared with the existing model)

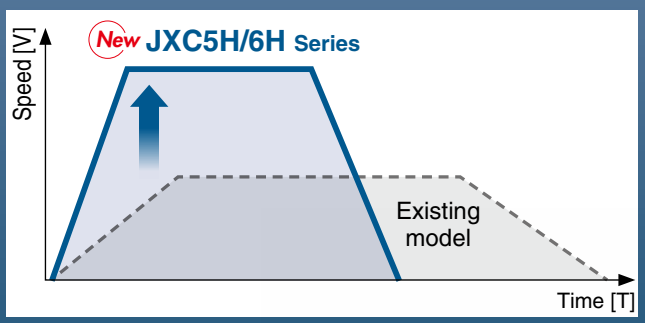

Easy operation restart after recovery of the power supply

The position information is held by the encoder even when the power supply is turned off. A return to origin operation is not necessary when the power supply is recovered.

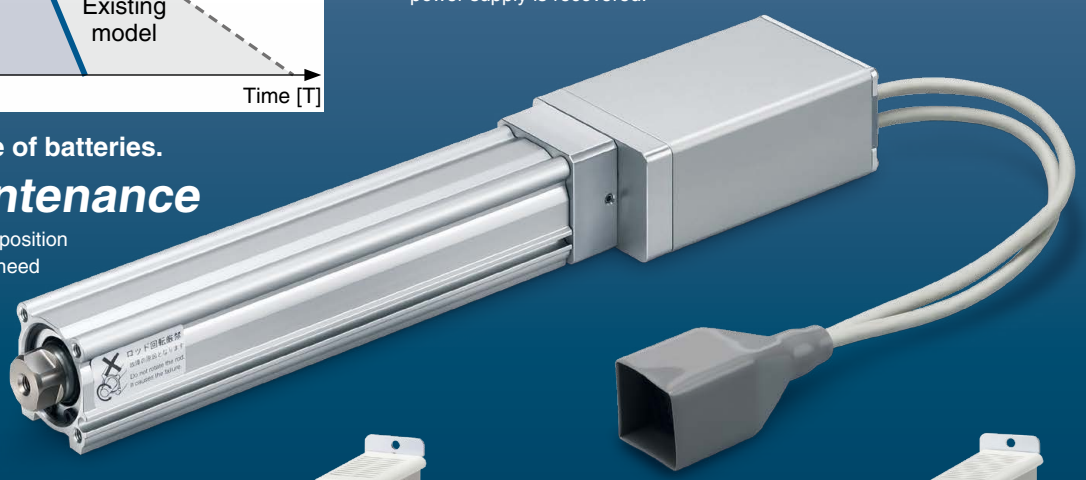

Does not require the use of batteries.

Reduced maintenance

Batteries are not used to store the position information. Therefore, there is no need to store spare batteries or replace dead batteries.

High Performance Step Motor Controller

Higher acceleration and maximum speed can be set with the special controller (for LEY□G Series).

Parallel I/O

JXC5H/6H Series p. 35

EtherCAT/EtherNet/IP™/ PROFINET

JXCEH/9H/PH Series p. 42

LEY□G Series

SMC

CAT.ES100-150A

Step Data Input Type JXC5H/6H Series p. 35

ACT 2 Controller Setting Software ACT Controller 2

Easy-to-use setting software ACT Controller 2 (For PC)

Various functions available in normal mode (Compared with the existing ACT Controller)

● Parameter and step data setting

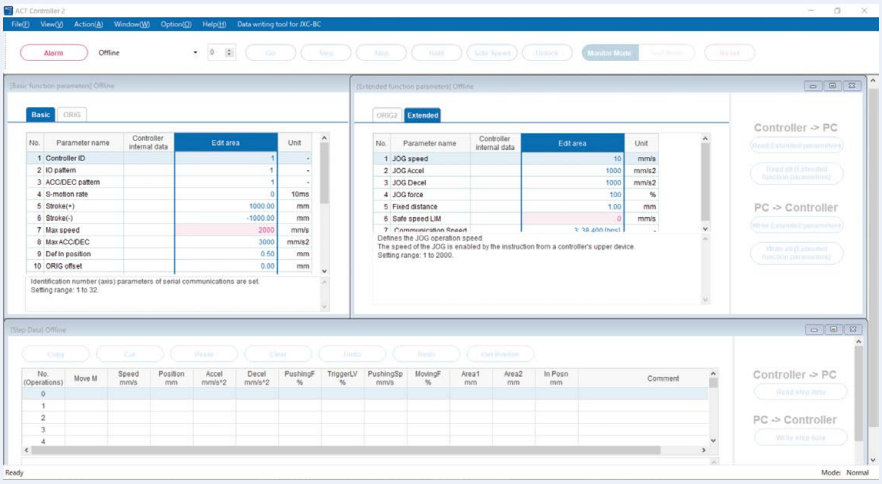

＊ Customers operating computers with specifications other than Windows 10/64 bit should use the existing ACT Controller.

● Alarm confirmation

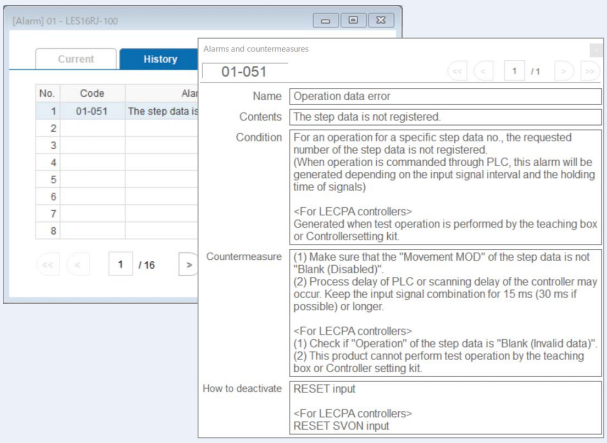

When an alarm is generated, the alarm details and countermeasures can be confirmed.

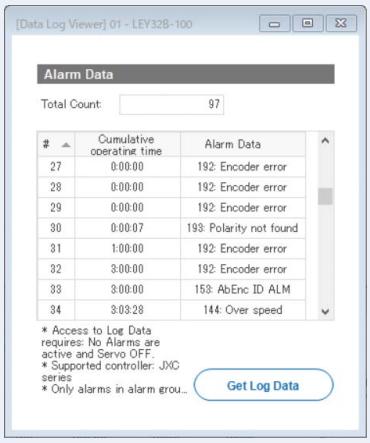

When an alarm is generated, the cumulative startup time of the controller can be confirmed.

● Waveform monitoring

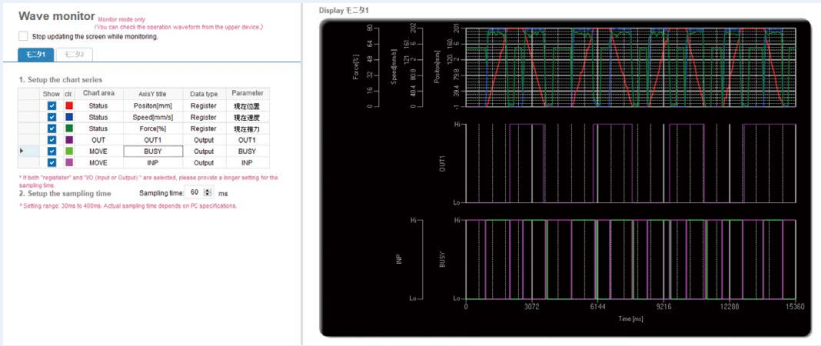

The position, speed, force, and input/output signals' waveform data during operation can be measured.

＊ When using the ACT Controller 2 test operation function, waveform monitoring is not available.

Step Data Input Type JXC5H/6H Series p. 35

ACT 2 Controller Setting Software ACT Controller 2

● The JXC-BC writing tool

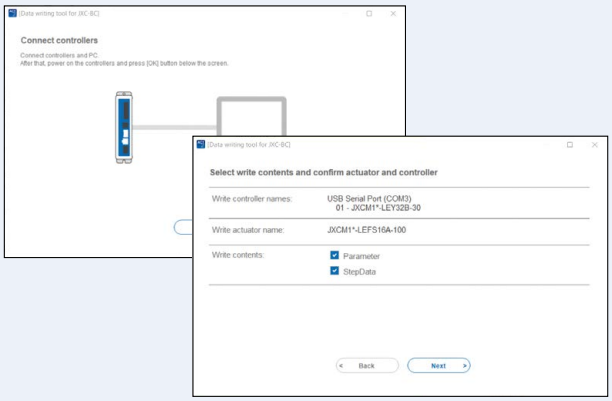

The writing tool can be used to write the connected actuator's parameters and step data to a JXC series blank controller.

● Customizable plug-in functions

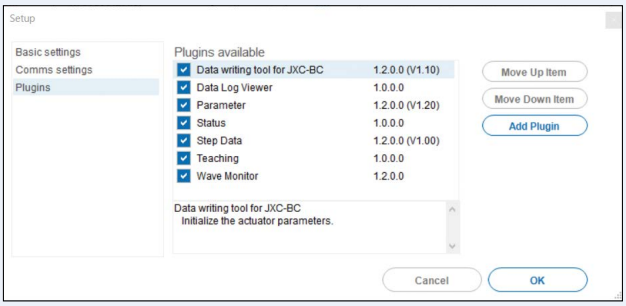

Which plug-in functions are displayed as well as the display order are customizable. Customers can add the functions they require.

In normal mode, various other test operation methods (program operation, jogging, moving of the constant rate, etc.), signal status monitoring, one-touch switching between Japanese and English, and other functions are available.

For immediate use, operate in easy mode.

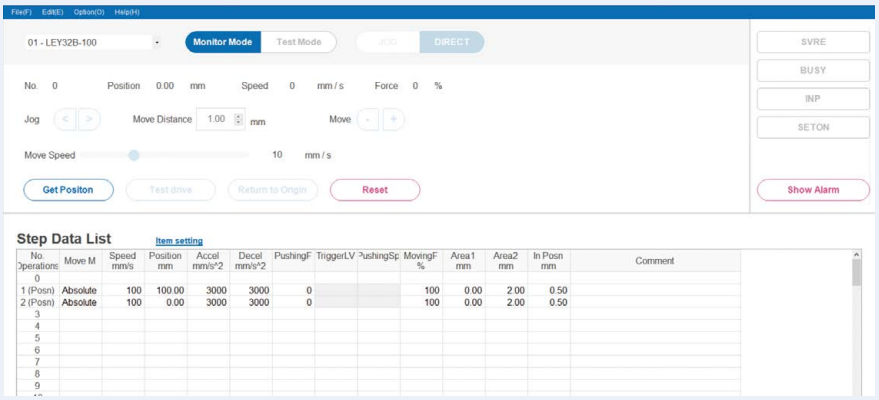

Step data setting, various test operations, and status confirmation can be done on a single screen.

How to download the setting software

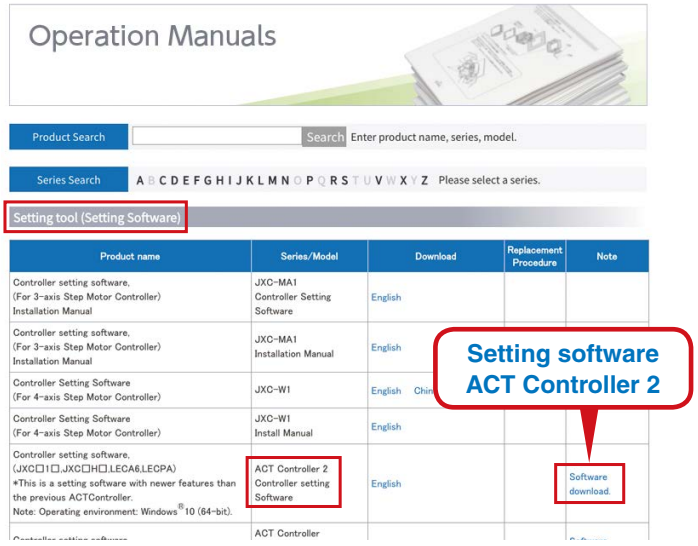

From the SMC website

Documents/Download

↓

Operation Manuals

↓

Electric Actuators

↓

Setting tool (Setting Software)

Setting software ACT Controller 2

Step Data Input Type JXC5H/6H Series p. 35

◎Easy Mode

<When a TB (teaching box) is used>

- The simple screen without scrolling promotes ease of setting and operation.
- Choose an icon from the first screen to select a function.
- Set the step data and check the monitor on the second screen.

Example of setting the step data

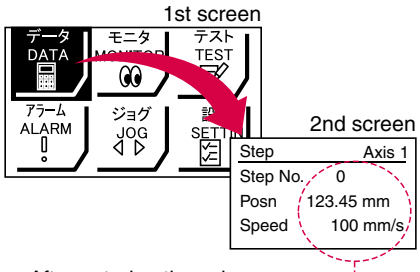

After entering the values, they can be registered by pressing "SET."

Example of checking the operation status

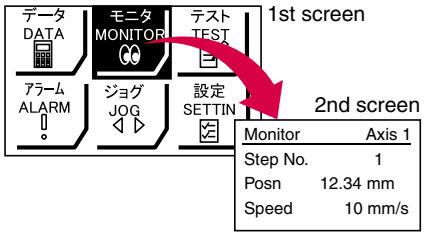

The operation status can be checked.

Teaching box screen

- **Data can be set by inputting only the position and speed.** (Other conditions are preset.)

Step	Axis 1
Step No.	0
Posn	50.00 mm
Speed	200 mm/s

→

Step	Axis 1
Step No.	1
Posn	80.00 mm
Speed	100 mm/s

◎Normal Mode

<When a TB (teaching box) is used>

- Multiple step data can be stored in the teaching box and transferred to the controller.
- Continuous test drive by up to 5 step data

Teaching box screen

- Each function (step data setting, test drive, monitoring, etc.) can be selected from the main menu.

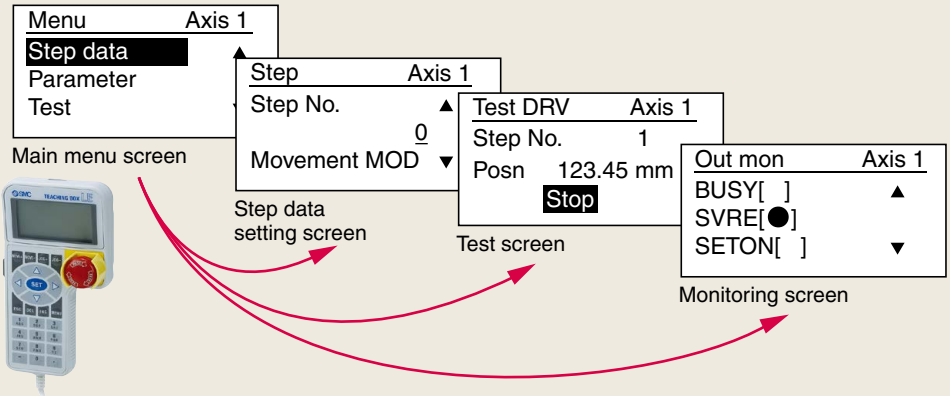

The actuator and controller are provided as a set. (They can be ordered separately as well.)

Confirm that the combination of the controller and actuator is correct.

<Check the following before use.>

① Check the actuator label for the model number. This number should match that of the controller.

② Check that the Parallel I/O configuration matches (NPN or PNP).

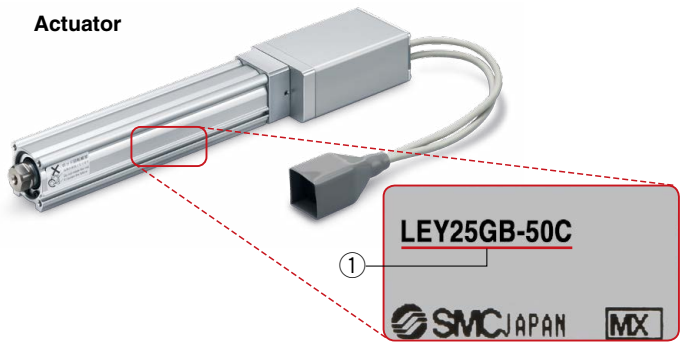

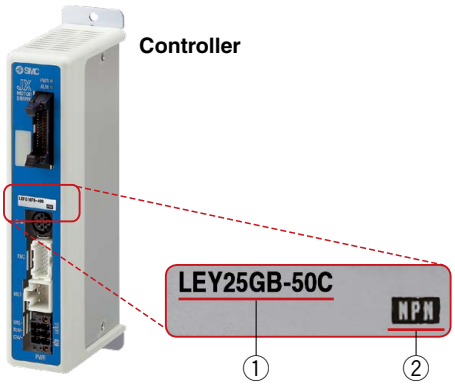

Function

Item	Step data input type JXC5H/6H
Step data and parameter setting	• Input from controller setting software (PC) • Input from teaching box
Step data "position" setting	• Numerical value input from controller setting software (PC) or teaching box • Input numerical value • Direct teaching • JOG teaching
Number of step data	64 points
Operation command (I/O signal)	Step No. [IN*] input ⇒ [DRIVE] input
Completion signal	[INP] output

Setting Items

TB: Teaching box PC: Controller setting software

Item		Contents	Easy Mode		Normal Mode	Step data input type JXC5H/6H
			TB	PC	TB/PC	
Step data setting (Excerpt)	**Movement MOD**	**Selection of "absolute position" and "relative position"**	△	●	●	Set at ABS/INC
	Speed	**Transfer speed**	●	●	●	Set in units of 1 mm/s
	Position	**[Position]: Target position [Pushing]: Pushing start position**	●	●	●	Set in units of 0.01 mm
	Acceleration/Deceleration	**Acceleration/deceleration during movement**	●	●	●	Set in units of 1 mm/s²
	Pushing force	**Rate of force during pushing operation**	●	●	●	Set in units of 1%
	Trigger LV	**Target force during pushing operation**	△	●	●	Set in units of 1%
	Pushing speed	**Speed during pushing operation**	△	●	●	Set in units of 1 mm/s
	Moving force	**Force during positioning operation**	△	●	●	Set to 100%
	Area output	**Conditions for area output signal to turn ON**	△	●	●	Set in units of 0.01 mm
	In position	**[Position]: Width to the target position [Pushing]: How much it moves during pushing**	△	●	●	Set to 0.5 mm or more (Units: 0.01 mm)
Parameter setting (Excerpt)	**Stroke (+)**	**+ side position limit**	×	×	●	Set in units of 0.01 mm
	Stroke (–)	**– side position limit**	×	×	●	Set in units of 0.01 mm
	ORIG direction	**Direction of the return to origin can be set.**	×	×	●	Compatible
	ORIG speed	**Speed during return to origin**	×	×	●	Set in units of 1 mm/s
	ORIG ACC	**Acceleration during return to origin**	×	×	●	Set in units of 1 mm/s²
Test	**JOG**		●	●	●	Continuous operation at the set speed can be tested while the switch is being pressed.
	MOVE		×	●	●	Operation at the set distance and speed from the current position can be tested.
	Return to ORIG		●	●	●	Compatible
	Test drive	**Operation of the specified step data**	●	●	● (Continuous operation)	Compatible
	Forced output	**ON/OFF of the output terminal can be tested.**	×	×	●	Compatible
Monitor	**DRV mon**	**Current position, speed, force, and the specified step data can be monitored.**	●	●	●	Compatible
	In/Out mon	**Current ON/OFF status of the input and output terminal can be monitored.**	×	×	●	Compatible
ALM	**Status**	**Alarm currently being generated can be confirmed.**	●	●	●	Compatible
	ALM Log record	**Alarms generated in the past can be confirmed.**	×	×	●	Compatible
File	**Save/Load**	**Step data and parameters can be saved, forwarded, and deleted.**	×	×	●	Compatible
Other	**Language**	**Can be changed to Japanese or English**	●	●	●	Compatible

△: Can be set from TB Ver. 2.** (The version information is displayed on the initial screen.)

Fieldbus Network

EtherCAT/EtherNet/IP™/PROFINET Direct Input Type Step Motor Controller/JXC□H Series p. 42

ACT 2 Controller Setting Software ACT Controller 2

JXCEH

JXC9H

JXCPH

◎Two types of operation command

Step no. defined operation: Operate using the preset step data in the controller.
Numerical data defined operation: The actuator operates using values such as position and speed from the PLC.

◎Numerical monitoring available

Numerical information, such as the current speed, current position, and alarm codes, can be monitored on the PLC.

◎Transition wiring of communication cables

Two communication ports are provided.

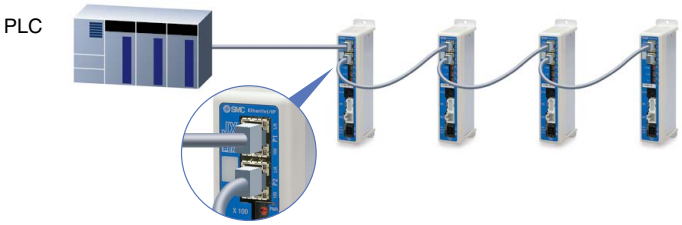

Application

Communication protocols

EtherCAT
EtherNet/IP
PROFINET

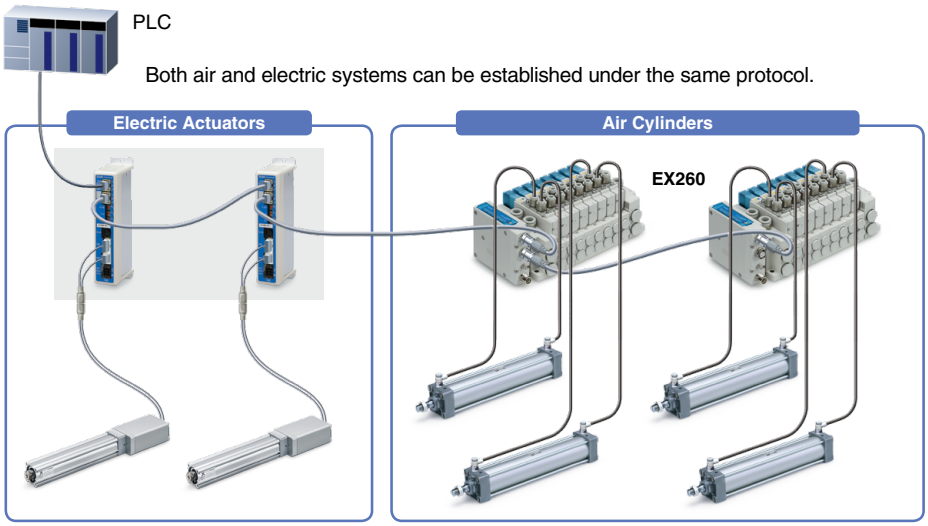

ACT 2 Controller Setting Software ACT Controller 2 From p. 1

Easy-to-use setting software ACT Controller 2 (For PC)

Various functions available in normal mode (Compared with the existing ACT Controller)

- Parameter and step data setting
- Alarm confirmation
- Waveform monitoring
- The JXC-BC writing tool
- Customizable plug-in functions

＊ Customers operating computers with specifications other than Windows 10/64 bit should use the existing ACT Controller.

System Construction/General Purpose I/O

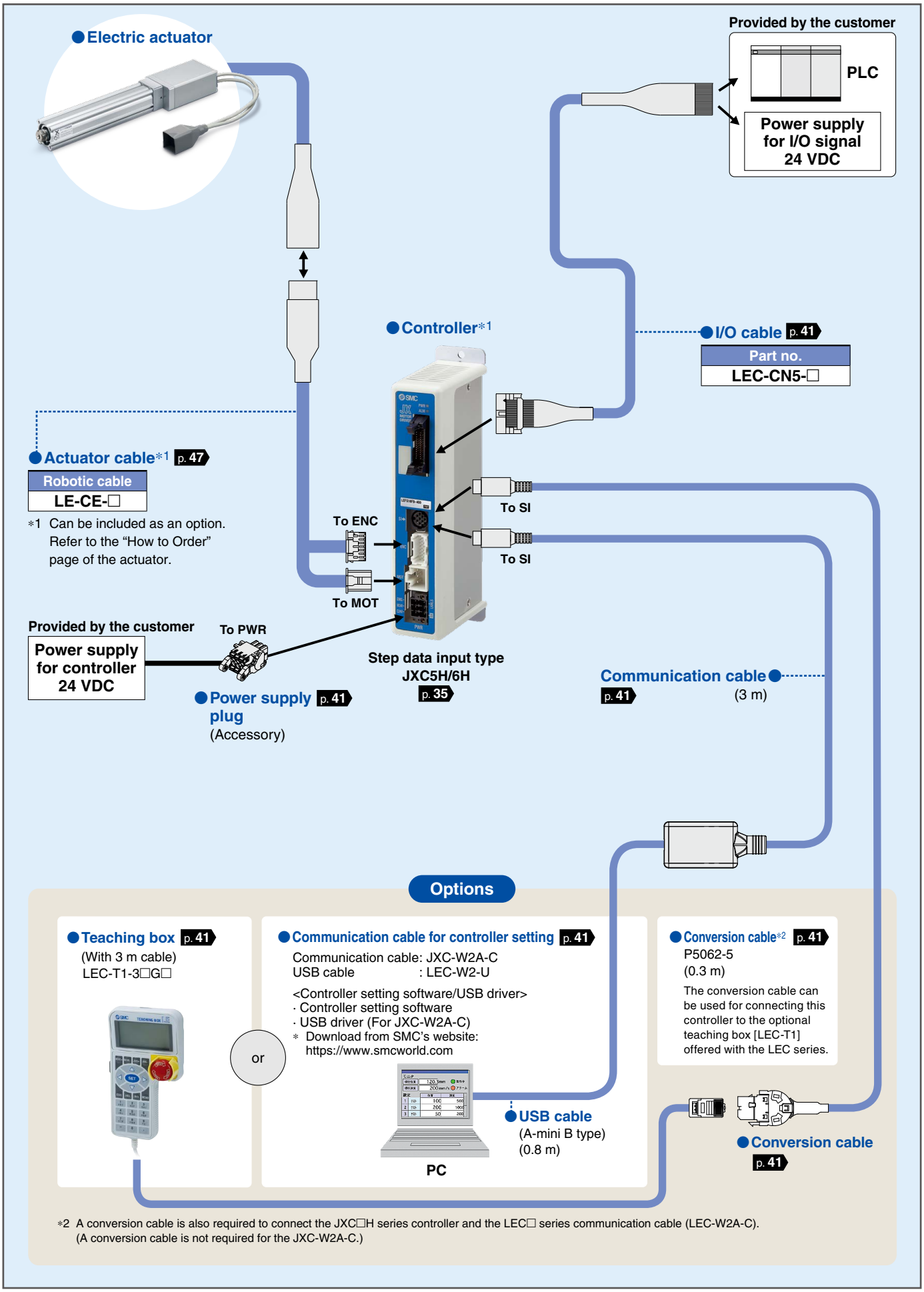

System Construction/Fieldbus Network
(EtherCAT/EtherNet/IP™/PROFINET Direct Input Type)

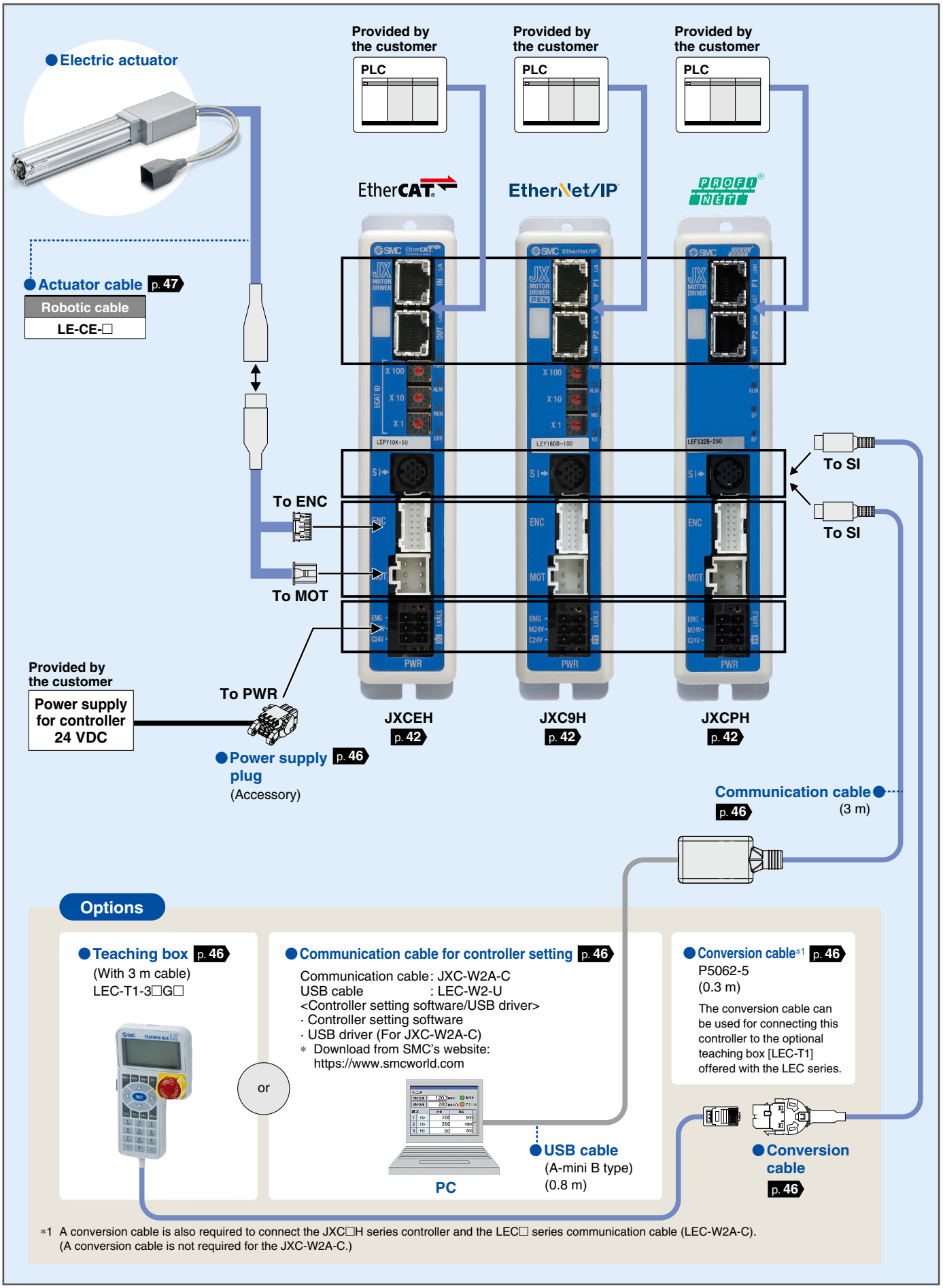

*1 A conversion cable is also required to connect the JXC□H series controller and the LEC□ series communication cable (LEC-W2A-C).
(A conversion cable is not required for the JXC-W2A-C.)

Electric Actuator

High Performance Rod Type

LEY□G Series

Battery-less Absolute (Step Motor 24 VDC)

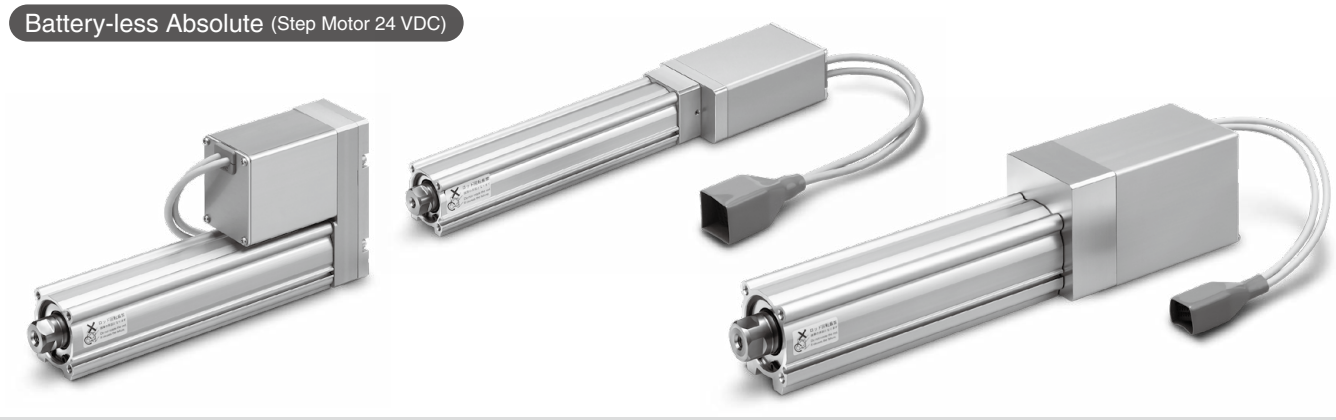

CONTENTS

High Performance Rod Type *LEY□G Series* p. 9

Battery-less Absolute (Step Motor 24 VDC)

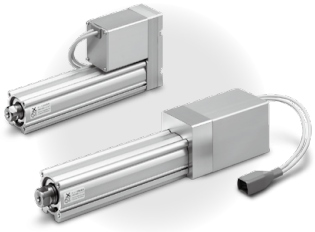

Model Selection ..... p. 9
How to Order ..... p. 17
Specifications ..... p. 19
Dimensions ..... p. 21
Auto Switch Mounting ..... p. 29

Controllers *JXC□H Series* p. 34

High Performance Controller (Step Data Input Type) *JXC5H/6H Series* Battery-less Absolute (Step Motor 24 VDC)

How to Order ..... p. 35
Specifications ..... p. 35
Dimensions ..... p. 37
Options ..... p. 41
Actuator Cable ..... p. 47

High Performance Step Motor Controller *JXCEH/9H/PH Series* Battery-less Absolute (Step Motor 24 VDC)

How to Order ..... p. 42
Specifications ..... p. 43
Dimensions ..... p. 44
Options ..... p. 46
Actuator Cable ..... p. 47

Battery-less Absolute Encoder Type Specific Product Precautions ..... p. 48
CE/UKCA/UL-compliance List ..... p. 49

Model Selection

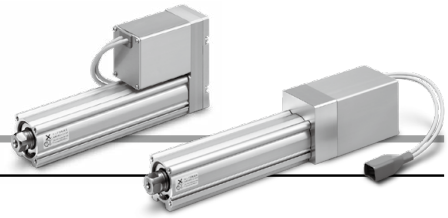

Selection Procedure

Positioning Control Selection Procedure

Step 1 Check the work load–speed. (Vertical transfer) → **Step 2** Check the cycle time.

Selection Example

Operating conditions

- Workpiece mass: 2 [kg]
- Speed: 100 [mm/s]
- Acceleration/Deceleration: 5000 [mm/s^2]
- Stroke: 200 [mm]
- Workpiece mounting condition: Vertical upward downward transfer

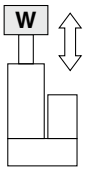

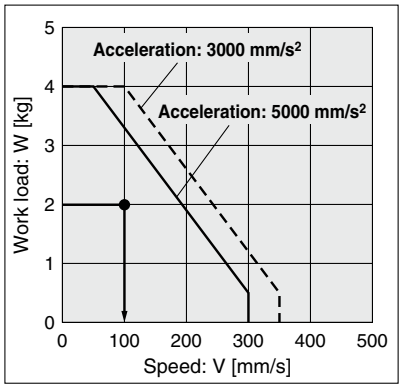

<Speed–Vertical work load graph> (LEY16□GB/Step motor)

Step 1 **Check the work load–speed. <Speed–Vertical work load graph>**

Select a model based on the workpiece mass and speed while referencing the speed–vertical work load graph.

Selection example) The **LEY16DGB** can be temporarily selected as a possible candidate based on the graph shown on the right side.

∗ It is necessary to mount a guide outside the actuator when used for horizontal transfer. When selecting the target model, refer to the horizontal work load in the specifications on page 19 and the precautions.

Step 2 **Check the cycle time.**

Calculate **the cycle time** using the following calculation method.

Cycle time:

T can be found from the following equation.

$$T = T1 + T2 + T3 + T4 \text{ [s]}$$

- T1: Acceleration time and T3: Deceleration time can be found by the following equation.

$$T1 = V/a1 \text{ [s]} \qquad T3 = V/a2 \text{ [s]}$$

- T2: Constant speed time can be found from the following equation.

$$T2 = \frac{L - 0.5 \cdot V \cdot (T1 + T3)}{V} \text{ [s]}$$

- T4: Settling time varies depending on the conditions such as actuator types, load, and in position of the step data.
  Reference value for settling time: 0.15 s or less
  The following value is used for this calculation.

$$T4 = 0.15 \text{ [s]}$$

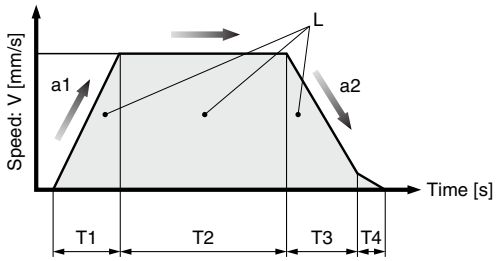

L : Stroke [mm] ··· (Operating condition)
V : Speed [mm/s] ··· (Operating condition)
a1: Acceleration [mm/s^2] ··· (Operating condition)
a2: Deceleration [mm/s^2] ··· (Operating condition)

T1: Acceleration time [s] ··· Time until reaching the set speed
T2: Constant speed time [s] ··· Time while the actuator is operating at a constant speed
T3: Deceleration time [s] ··· Time from the beginning of the constant speed operation to stop
T4: Settling time [s] ··· Time until positioning is completed

Calculation example)
T1 to T4 can be calculated as follows.

$$T1 = V/a1 = 100/5000 = 0.02 \text{ [s]}, \quad T3 = V/a2 = 100/5000 = 0.02 \text{ [s]}$$

$$T2 = \frac{L - 0.5 \cdot V \cdot (T1 + T3)}{V} = \frac{200 - 0.5 \cdot 100 \cdot (0.02 + 0.02)}{100} = 1.98 \text{ [s]}$$

$$T4 = 0.15 \text{ [s]}$$

The cycle time can be found as follows.

$T = T1 + T2 + T3 + T4 = 0.02 + 1.98 + 0.02 + 0.15 =$ **2.17 [s]**

Based on the above calculation result, the LEY16DGB-200 should be selected.

Selection Procedure

Pushing Control Selection Procedure

Step 1 Check the duty ratio. → **Step 2** Check the pushing force. → **Step 3** Check the lateral load on the rod end.

∗ The duty ratio is a ratio of the operation time in one cycle.

Selection Example

Operating conditions

- Mounting condition: Horizontal (pushing)
- Attachment weight: 0.2 [kg]
- Pushing force: 40 [N]
- Duty ratio: 15 [%]
- Speed: 100 [mm/s]
- Stroke: 200 [mm]

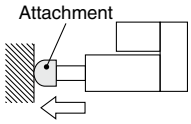

Step 1 **Check the duty ratio.**
<Conversion table of pushing force–duty ratio>

Select the [Pushing force] from the duty ratio while referencing the conversion table of pushing force–duty ratio.

Selection example)
Based on the table below,
- Duty ratio: 15 [%]

The pushing force set value will be 65 [%].

<Conversion table of pushing force–duty ratio>
(LEY16/Battery-less absolute)

Ambient temperature	Pushing force set value [%]	Duty ratio [%]	Continuous pushing time [min]
30°C or less	65 or less	100	No restriction
40°C	40 or less	100	No restriction
	50	30	45 or less
	60	18	15 or less
	65	15	10 or less

∗ [Pushing force set value] is one of the step data input to the controller.
∗ [Continuous pushing time] is the time that the actuator can continuously keep pushing.

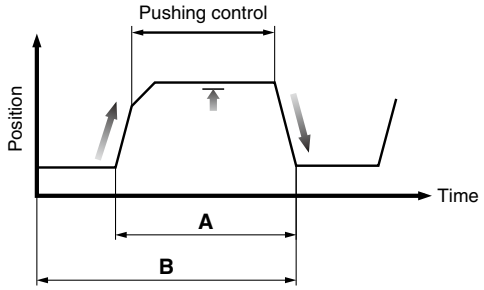

Duty ratio = A/B x 100 [%]

Step 2 **Check the pushing force.**
<Force conversion graph>

Select a model based on the pushing force set value and force while referencing the force conversion graph.

Selection example)
Based on the graph shown on the right side,
- Pushing force: 40 [N]
- Pushing force set value: 33 [%]

The **LEY16DGB** can be temporarily selected as a possible candidate.

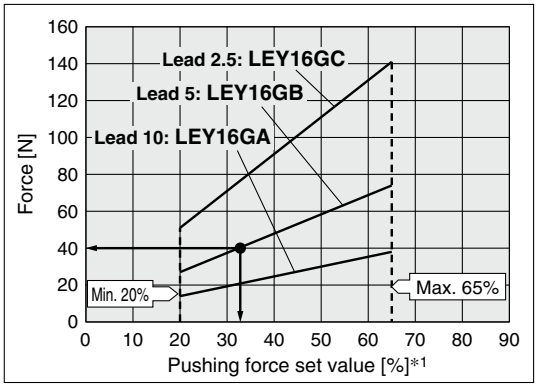

<Force conversion graph>
(LEY16□G/Step motor)
∗1 Set values for the controller

Step 3 **Check the lateral load on the rod end.**
<Graph of allowable lateral load on the rod end>

Confirm the allowable lateral load on the rod end of the actuator: LEY16□, which has been selected temporarily while referencing the graph of allowable lateral load on the rod end.

Selection example)
Based on the graph shown on the right side,
- Attachment weight: 0.2 [kg] ≈ 2 [N]
- Product stroke: 200 [mm]

The lateral load on the rod end is in the allowable range.

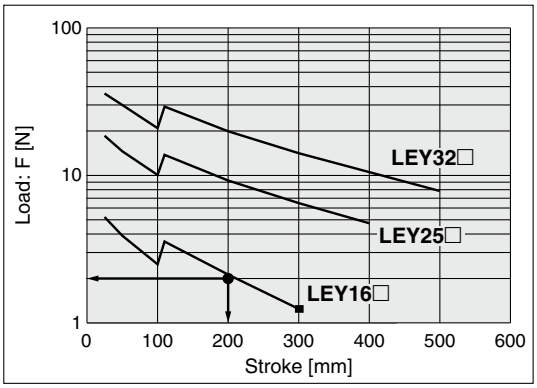

<Graph of allowable lateral load on the rod end>

Based on the above calculation result, the LEY16DGB-200 should be selected.

Speed–Work Load Graph (Guide)

∗ The following graphs show the values when the external guide is used together, and the moving force is 100%.

LEY16□GA

Horizontal/Lead 10

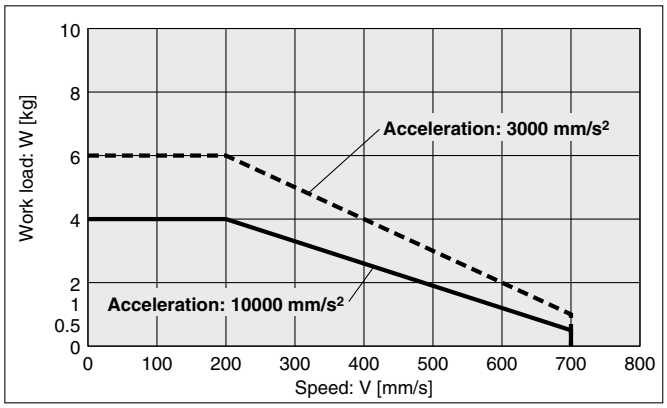

Vertical/Lead 10

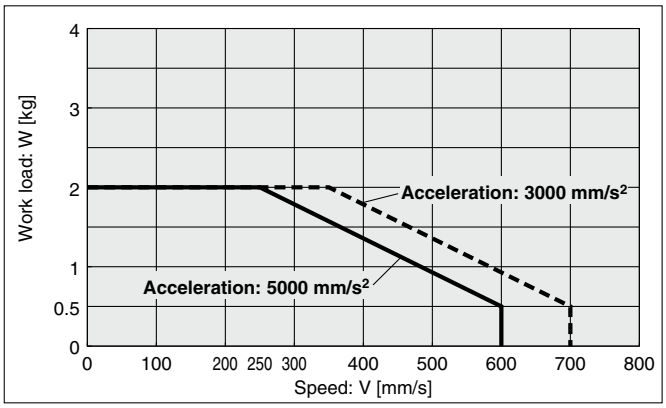

LEY16□GB

Horizontal/Lead 5

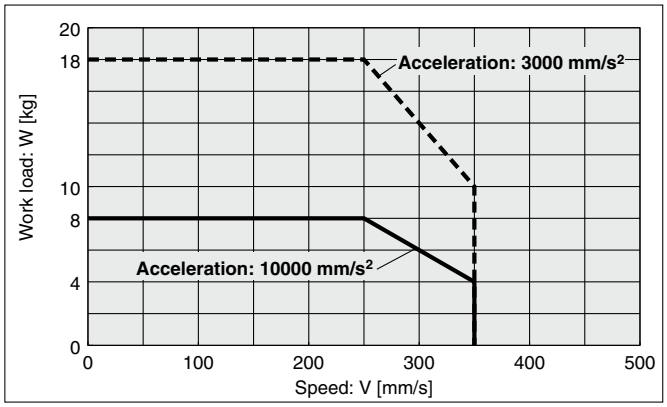

Vertical/Lead 5

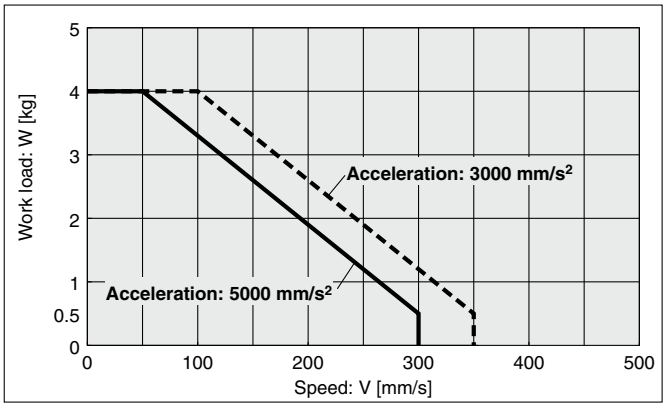

LEY16□GC

Horizontal/Lead 2.5

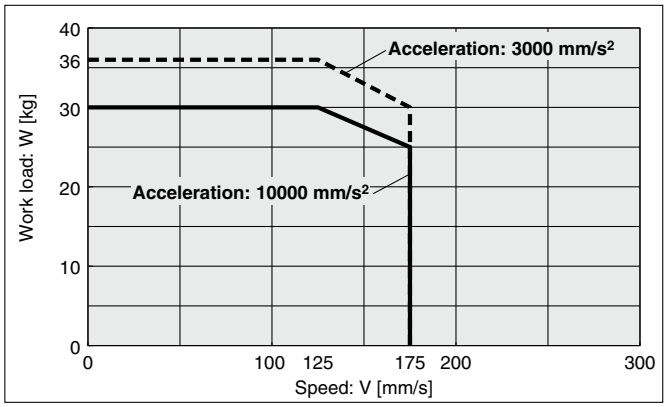

Vertical/Lead 2.5

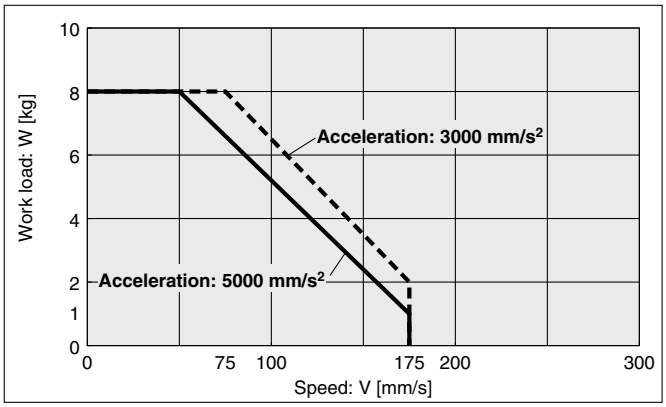

Operating temperature: Use products with a duty ratio of 100% or less when the temperature is below 30°C and with a duty ratio of 35% or less when the temperature exceeds 30°C.

Speed–Work Load Graph (Guide)

∗ The following graphs show the values when the external guide is used together, and the moving force is 100%.

LEY25□GA

Horizontal/Lead 12

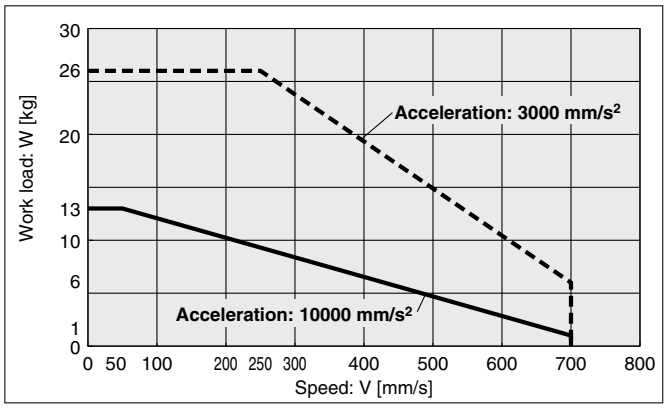

Vertical/Lead 12

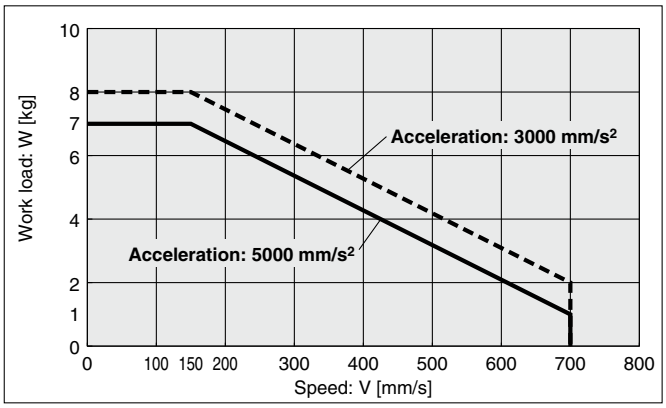

LEY25□GB

Horizontal/Lead 6

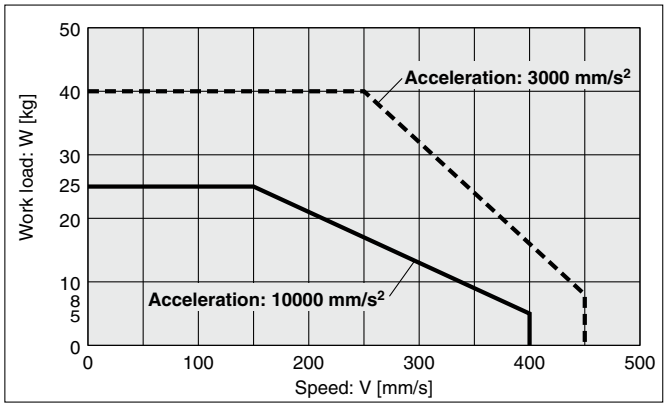

Vertical/Lead 6

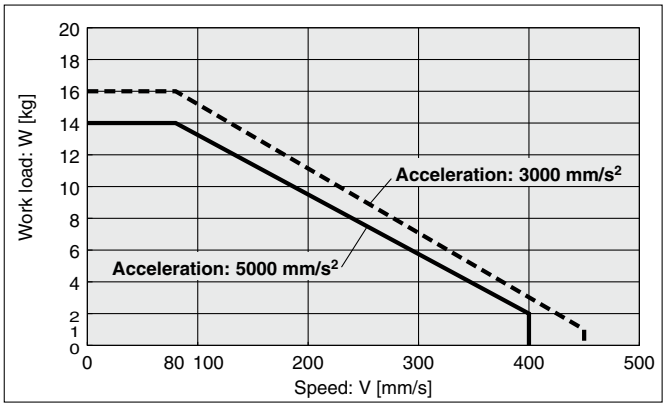

LEY25□GC

Horizontal/Lead 3

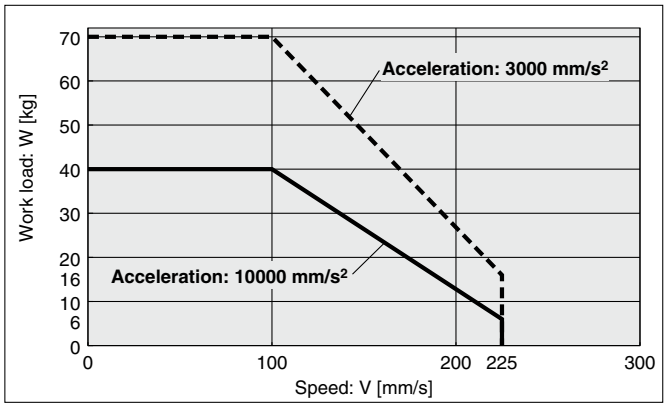

Vertical/Lead 3

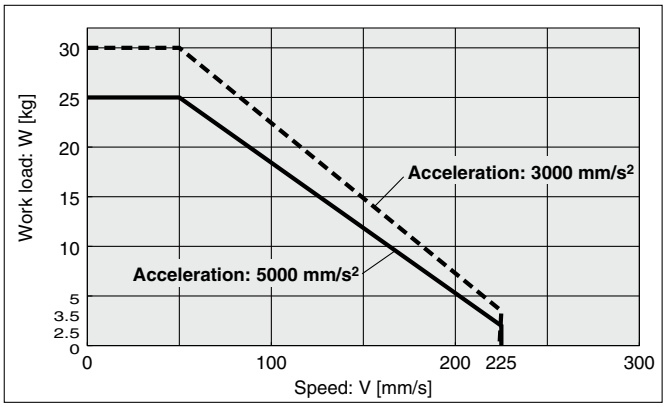

Operating temperature: Use products with a duty ratio of 100% or less when the temperature is below 30°C and with a duty ratio of 35% or less when the temperature exceeds 30°C.

Speed–Work Load Graph (Guide)

∗ The following graphs show the values when the external guide is used together, and the moving force is 100%.

LEY40□GA

Horizontal/Lead 16

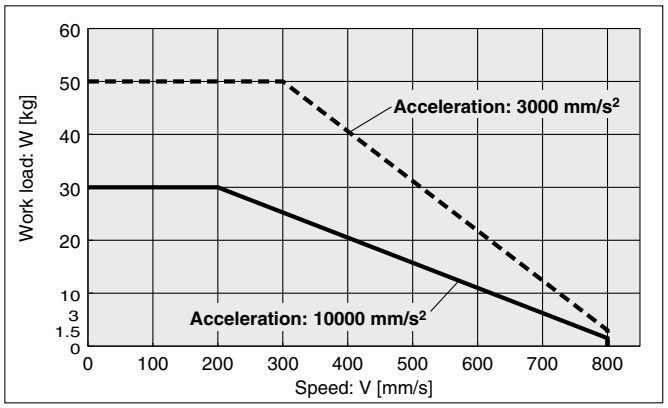

Vertical/Lead 16

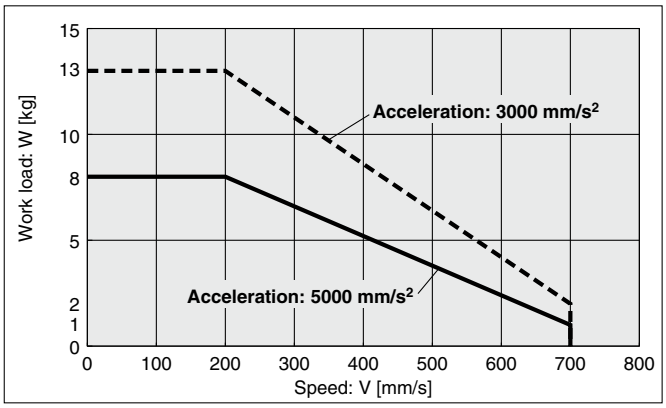

LEY40□GB

Horizontal/Lead 8

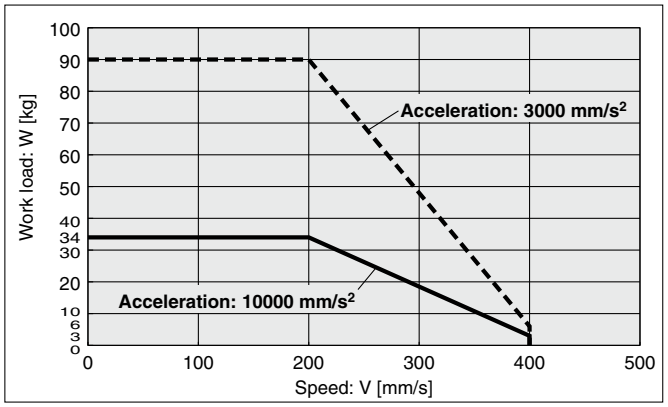

Vertical/Lead 8

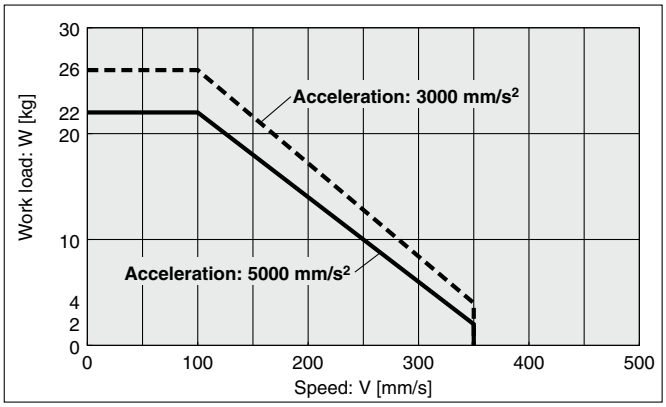

LEY40□GC

Horizontal/Lead 4

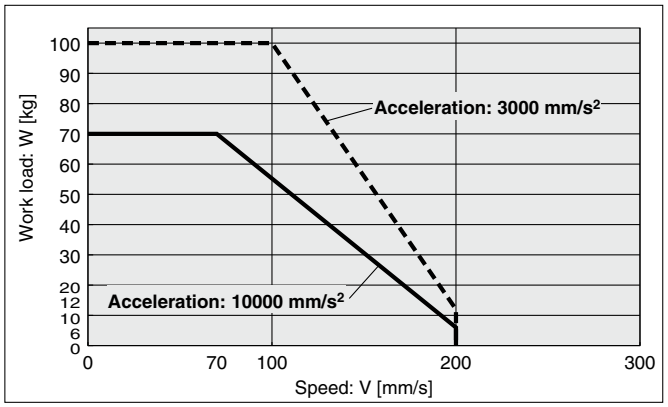

Vertical/Lead 4

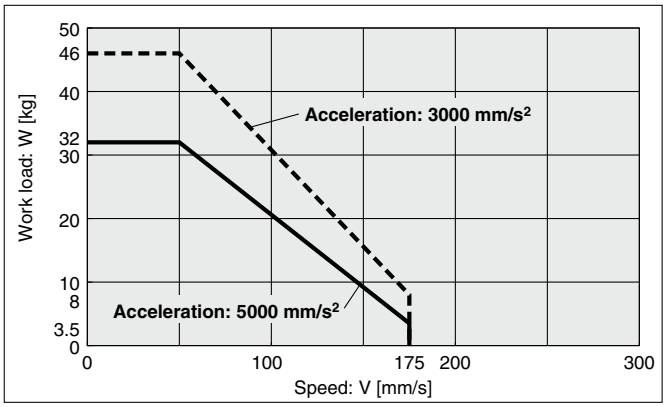

Operating temperature: Use products with a duty ratio of 100% or less when the temperature is below 30°C and with a duty ratio of 35% or less when the temperature exceeds 30°C.

Graph of Allowable Lateral Load on the Rod End (Guide)

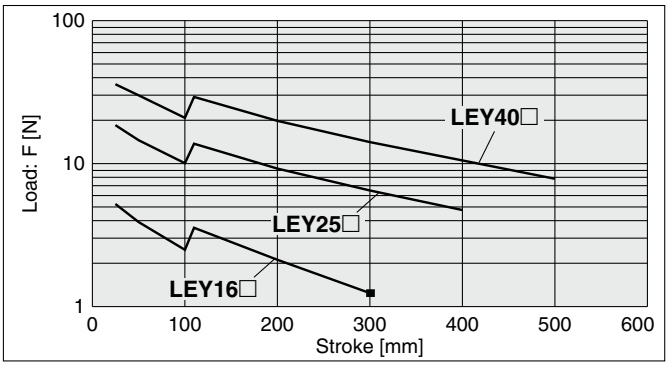

[Stroke] = [Product stroke] + [Distance from the rod end to the center of gravity of the workpiece]

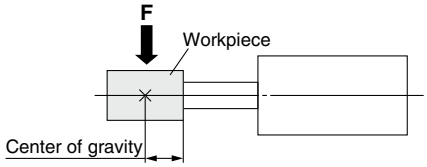

Rod Displacement: δ [mm]

Size \ Stroke	30	50	100	150	200	250	300	350	400	450	500
16	±0.4	±0.5	±0.9	±0.8	±1.1	±1.3	±1.5	—	—	—	—
25	±0.3	±0.4	±0.7	±0.7	±0.9	±1.1	±1.3	±1.5	±1.7	—	—
40	±0.3	±0.4	±0.7	±0.6	±0.8	±1.0	±1.1	±1.3	±1.5	±1.7	±1.8

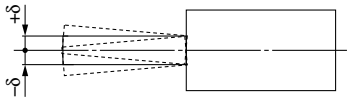

∗ The values without a load are shown.

Non-rotating Accuracy of Rod

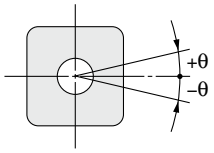

Size	Non-rotating accuracy θ
16	±1.1°
25	±0.8°
40	±0.7°

∗ Avoid using the electric actuator in such a way that rotational torque would be applied to the piston rod.
Failure to do so may result in the deformation of the non-rotating guide, abnormal auto switch responses, play in the internal guide, or an increase in the sliding resistance.

Force Conversion Graph (Guide)

LEY16□G

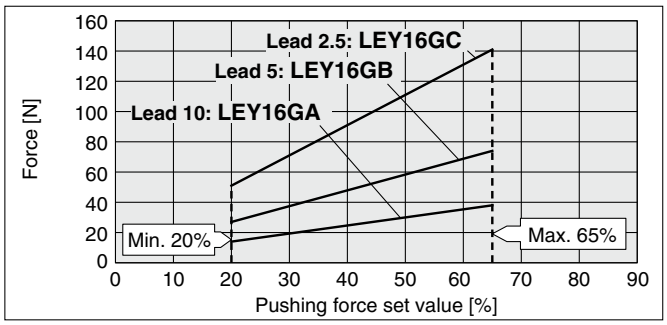

Ambient temperature	Pushing force set value [%]	Duty ratio [%]	Continuous pushing time [min]
30°C or less	65 or less	100	No restriction
40°C	40 or less	100	No restriction
	50	30	45 or less
	60	18	15 or less
	65	15	10 or less

LEY25□G

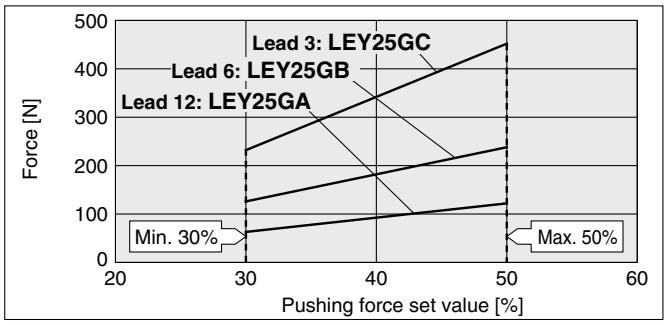

Ambient temperature	Pushing force set value [%]	Duty ratio [%]	Continuous pushing time [min]
40°C or less	50% or less	100	No restriction

LEY40□G

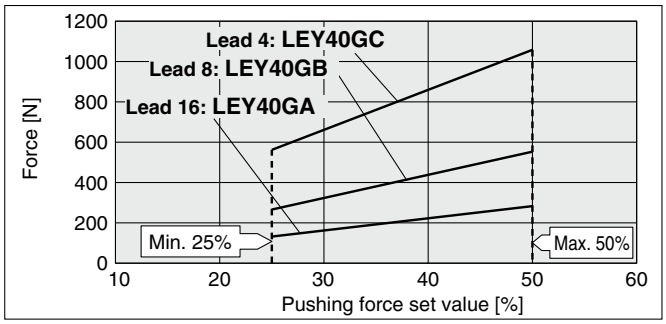

Ambient temperature	Pushing force set value [%]	Duty ratio [%]	Continuous pushing time [min]
40°C or less	50% or less	100	No restriction

<Limit Values for Pushing Force and Trigger Level in Relation to Pushing Speed>

Model	Lead	Pushing speed [mm/s]	Pushing force (Setting input value)
LEY16□G	A/B/C	21 to 50	45 to 65%
LEY25□G	A/B/C	21 to 35	40 to 50%
LEY40□G	A	24 to 30	40 to 50%
	B/C	21 to 30	

There is a limit to the pushing force in relation to the pushing speed. If the product is operated outside of the range (low pushing force), the completion signal [INP] may be output before the pushing operation has been completed (during the moving operation).
If operating with the pushing speed below the min. speed, please check for operating problems before using the product.

<Set Values for Vertical Upward Transfer Pushing Operations>

For vertical loads (upward), set the pushing force to the max. value shown below and operate at the work load or less.

Model	LEY16□G			LEY25□G			LEY40□G		
Lead	**A**	**B**	**C**	**A**	**B**	**C**	**A**	**B**	**C**
Work load [kg]	1	1.5	3	2.5	5	10	7	14	28
Pushing force	65%			50%			50%		

High Performance

Rod Type
LEY□G Series LEY16, 25, 40

For details, refer to page 49.

RoHS

How to Order

Motor mounting position: Parallel **Motor mounting position: In-line**

LEY 25 □ G B – 50 C □ □ – R1 C5H73

❶ ❷ ❸ ❹ ❺ ❻ ❼ ❽ ❾ ❿

For details on controllers, refer to page 18.

❶ Size

16
25
40

❷ Motor mounting position/Motor cover direction

Symbol	Motor mounting position	Motor cover direction
Nil	Top side parallel	—
D	In-line	—*1
D1		Left side*2
D2		Right side*2
D3		Top side*2
D4		Bottom side*2

❸ Motor type

Symbol	Type	Compatible controllers	
G	High performance Battery-less absolute (Step motor 24 VDC)	JXC5H JXC6H	JXCEH JXC9H JXCPH

❹ Lead [mm]

Symbol	LEY16	LEY25	LEY40
A	10	12	16
B	5	6	8
C	2.5	3	4

❺ Stroke*3 [mm]

30	30
to	to
500	500

* For details, refer to the applicable stroke table below.

❻ Motor option*4

C	With motor cover
W	With lock/motor cover

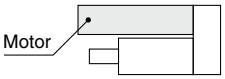

❼ Rod end thread

Nil	Rod end female thread
M	Rod end male thread (1 rod end nut is included.)

❽ Mounting*5

Symbol	Type	Motor mounting position	
		Parallel	In-line
Nil	Ends tapped/ Body bottom tapped*6	●	●
L	Foot bracket	●	—
F	Rod flange*6	●*8	●
G	Head flange*6	●*9	—
D	Double clevis*7	●	—

❾ Actuator cable type/length

Robotic cable [m]

Nil	None	R8	8*10
R1	1.5	RA	10*10
R3	3	RB	15*10
R5	5	RC	20*10

Applicable Stroke Table

Size	Stroke [mm]											
	30	50	100	150	200	250	300	350	400	450	500	Manufacturable stroke range
16	●	●	●	●	●	●	●	—	—	—	—	10 to 300
25	●	●	●	●	●	●	●	●	●	—	—	15 to 400
40	●	●	●	●	●	●	●	●	●	●	●	20 to 500

For auto switches, refer to pages 29 to 32.

⑩ Controller

Nil	Without controller
C□H□□	With controller

C 5 H 7 3

Interface (Communication protocol/Input/Output)

5	Parallel I/O (NPN)
6	Parallel I/O (PNP)
E	EtherCAT
9	EtherNet/IP™
P	PROFINET

Mounting

7	Screw mounting
8∗11	DIN rail

Number of axes/ Special specification

H	1 axis/High performance type

Communication plug connector, I/O cable∗12

Symbol	Type	Applicable interface
Nil	Without accessory	—
1	I/O cable (1.5 m)	Parallel input (NPN) Parallel input (PNP)
3	I/O cable (3 m)	
5	I/O cable (5 m)	

∗1 Sizes 25 and 40 only
∗2 Size 16 only
∗3 Please contact SMC for non-standard strokes as they are produced as special orders.
∗4 When "With lock/motor cover" is selected for the top side parallel motor type, the motor body will stick out from the end of the body for size 16 with strokes of 50 mm or less and size 40 with strokes of 30 mm or less. Check for interference with workpieces before selecting a model.
∗5 The mounting bracket is shipped together with the product but does not come assembled.
∗6 For the horizontal cantilever mounting of the rod flange, head flange, or ends tapped types, use the actuator within the following stroke range.
· LEY25: 200 or less · LEY40: 100 or less
∗7 For the mounting of the double clevis type, use the actuator within the following stroke range.
· LEY16: 100 or less · LEY25: 200 or less · LEY40: 200 or less
∗8 The rod flange type is not available for the LEY16 with strokes of 50 mm or less and LEY40 with strokes of 30 mm or less, and motor option "With lock/motor cover."
∗9 The head flange type is not available for the LEY40.
∗10 Produced upon receipt of order
∗11 The DIN rail is not included. It must be ordered separately.
∗12 Select "Nil" for anything other than parallel input.
Select "Nil," "1," "3," or "5" for parallel input.

⚠Caution

[CE/UKCA-compliant products]
EMC compliance was tested by combining the electric actuator LEY series and the controller JXC series.
The EMC depends on the configuration of the customer's control panel and the relationship with other electrical equipment and wiring. Therefore, compliance with the EMC directive cannot be certified for SMC components incorporated into the customer's equipment under actual operating conditions. As a result, it is necessary for the customer to verify compliance with the EMC directive for the machinery and equipment as a whole.

■Trademark

EtherNet/IP® is a registered trademark of ODVA, Inc.
EtherCAT® is registered trademark and patented technology, licensed by Beckhoff Automation GmbH, Germany.

The actuator and controller are sold as a package.

Confirm that the combination of the controller and actuator is correct.

<Check the following before use.>

∗1 Check the actuator label for the model number.
This number should match that of the controller.

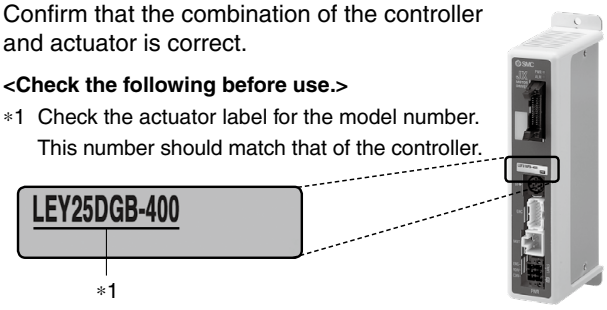

∗ Refer to the Operation Manual for using the products.
Please download it via our website: https://www.smcworld.com

Compatible Controllers

Type	Step data input type	EtherCAT direct input type	EtherNet/IP™ direct input type	PROFINET direct input type
Series	**JXC5H JXC6H**	**JXCEH**	**JXC9H**	**JXCPH**
Features	Parallel I/O	EtherCAT direct input	EtherNet/IP™ direct input	PROFINET direct input
Compatible motor	Battery-less absolute (Step motor 24 VDC)			
Max. number of step data	64 points			
Power supply voltage	24 VDC			
Reference page	35	42		

Specifications

Model				LEY16G			LEY25G			LEY40G		
Actuator specifications	Work load [kg]*1	Horizontal	(10000 [mm/s²])	4	8	30	13	25	40	30	34	70
			(3000 [mm/s²])	6	18	36	26	40	70	50	90	100
		Vertical	(5000 [mm/s²])	2	4	8	7	14	25	8	22	32
			(3000 [mm/s²])	2	4	8	8	16	30	13	26	46
	Pushing force [N]*2 *3 *4			14 to 38	27 to 74	51 to 141	63 to 122	126 to 238	232 to 452	132 to 283	266 to 553	562 to 1058
	Speed [mm/s]*4	Stroke range	Up to 300	15 to 700	8 to 350	4 to 175	18 to 700	9 to 450	5 to 225	24 to 800	12 to 400	6 to 200
			350 to 400	—	—	—	18 to 600	9 to 300	5 to 150	24 to 640	12 to 320	6 to 160
			400 to 500	—	—	—	—	—	—	24 to 640	12 to 320	6 to 160
	Max. acceleration/deceleration [mm/s²]			10000								
	Pushing speed [mm/s]*5			50 or less			35 or less			30 or less		
	Positioning repeatability [mm]			±0.02								
	Lost motion [mm]*6			0.1 or less								
	Screw lead [mm]			10	5	2.5	12	6	3	16	8	4
	Impact/Vibration resistance [m/s²]*7			50/20								
	Actuation type			Ball screw + Belt (LEY□G)/Ball screw (LEY□DG)								
	Guide type			Sliding bushing (Piston rod)								
	Operating temperature range [°C]			5 to 40								
	Operating humidity range [%RH]			90 or less (No condensation)								
Electric specifications	Motor size			□28			□42			□56.4		
	Motor type			Battery-less absolute (Step motor 24 VDC)								
	Encoder			Battery-less absolute								
	Power supply voltage [V]			24 VDC ±10%								
	Power [W]*8 *9			Max. power 116			Max. power 126			Max. power 222		
Lock unit specifications	Type*10			Non-magnetizing lock								
	Holding force [N]			20	39	78	78	157	294	127	265	519
	Power [W]*9			2.9			5			5		
	Rated voltage [V]			24 VDC ±10%								

*1 Horizontal: Please use an external guide (friction coefficient: 0.1 or less). The work load shows the maximum value. The actual work load and transfer speed change according to the condition of the external guide.
For the speed, acceleration, and duty ratio according to the work load, check the "Speed–Work Load Graph" on pages 11 to 13.
Vertical: If the rod orientation is vertical or radial load is applied to the rod, please use an external guide (friction coefficient: 0.1 or less). The work load represents the maximum value. The actual work load and transfer speed change according to the condition of the external guide.
For the speed, acceleration, and duty ratio according to the work load, check the "Speed–Work Load Graph" on pages 11 to 13.
The values shown in ( ) are the max. acceleration/deceleration.
Set the acceleration/deceleration speed to 10000 [mm/s²] or less for the horizontal direction and 5000 [mm/s²] or less for the vertical direction.
*2 Pushing force accuracy is ±20% (F.S.).
*3 The pushing force set values for LEY16□G are 20% to 65%, for LEY25□G are 30% to 50%, and for LEY40□G are 25% to 50%.
The pushing force values change according to the duty ratio and pushing speed. Check the "Force Conversion Graph" on page 15.
*4 The speed and force may change depending on the cable length, load, and mounting conditions. Furthermore, if the cable length exceeds 5 m, then it will decrease by up to 10% for each 5 m. (At 15 m: Reduced by up to 20%)
*5 The allowable speed for pushing operation. When push conveying a workpiece, operate at the vertical work load or less.
*6 A reference value for correcting errors in reciprocal operation
*7 Impact resistance: No malfunction occurred when the actuator was tested with a drop tester in both an axial direction and a perpendicular direction to the lead screw. (The test was performed with the actuator in the initial state.)
Vibration resistance: No malfunction occurred in a test ranging between 45 to 2000 Hz. The test was performed in both an axial direction and a perpendicular direction to the lead screw. (The test was performed with the actuator in the initial state.)
*8 Indicates the max. power during operation (including the controller). This value can be used for the selection of the power supply.
*9 For an actuator with lock, add the power for the lock.
*10 With lock only

Weight

Weight: Top Side Parallel Motor Type

Series	LEY16							LEY25								
Stroke [mm]	30	50	100	150	200	250	300	30	50	100	150	200	250	300	350	400
Product weight [kg]	0.75	0.79	0.90	1.04	1.15	1.26	1.37	1.43	1.50	1.67	1.93	2.11	2.28	2.46	2.63	2.81

Series	LEY40										
Stroke [mm]	30	50	100	150	200	250	300	350	400	450	500
Product weight [kg]	2.88	2.99	3.28	3.56	3.96	4.25	4.53	4.82	5.11	5.39	5.68

Weight: In-line Motor Type

Series	LEY16D							LEY25D								
Stroke [mm]	30	50	100	150	200	250	300	30	50	100	150	200	250	300	350	400
Product weight [kg]	0.72	0.76	0.87	1.01	1.12	1.23	1.34	1.36	1.43	1.60	1.86	2.04	2.21	2.39	2.56	2.74

Series	LEY40D										
Stroke [mm]	30	50	100	150	200	250	300	350	400	450	500
Product weight [kg]	2.80	2.91	3.20	3.48	3.88	4.17	4.45	4.74	5.03	5.31	5.60

Additional Weight

[kg]

Size		16	25	40
Lock/Motor cover		0.16	0.33	0.65
Rod end male thread	**Male thread**	0.01	0.03	0.03
	Nut	0.01	0.02	0.02
Foot bracket (2 sets including mounting bolt)		0.06	0.08	0.14
Rod flange (including mounting bolt)		0.13	0.17	0.20
Head flange (including mounting bolt)				
Double clevis (including pin, retaining ring, and mounting bolt)		0.08	0.16	0.22

Dimensions: Top Side Parallel Motor

LEY16G

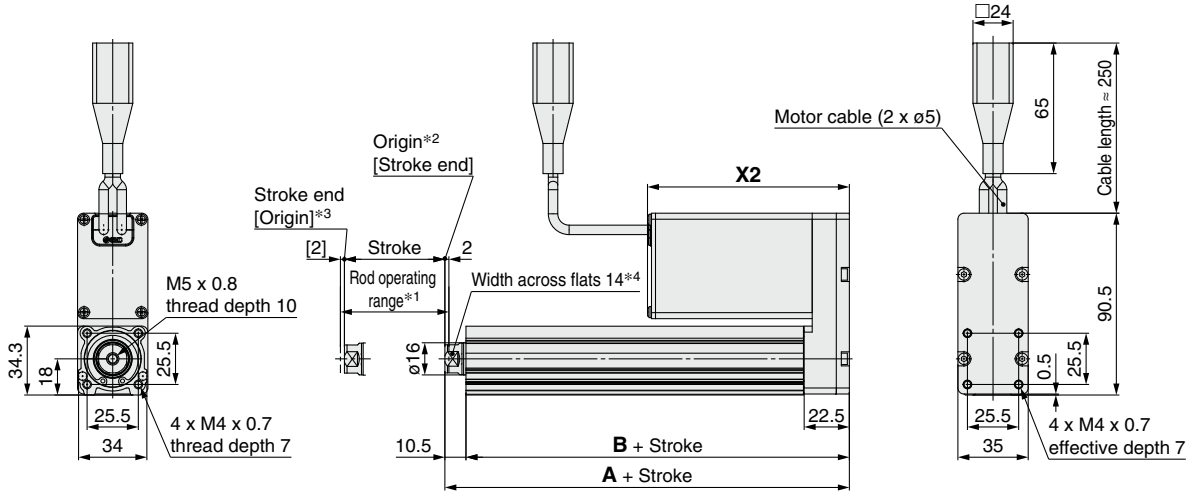

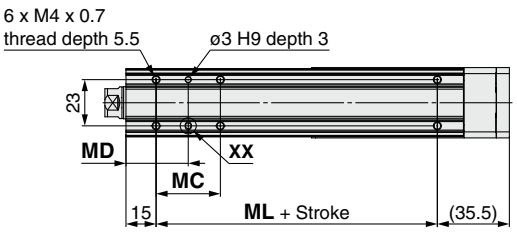

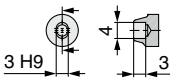

XX (2:1)

Motor option: With lock/motor cover

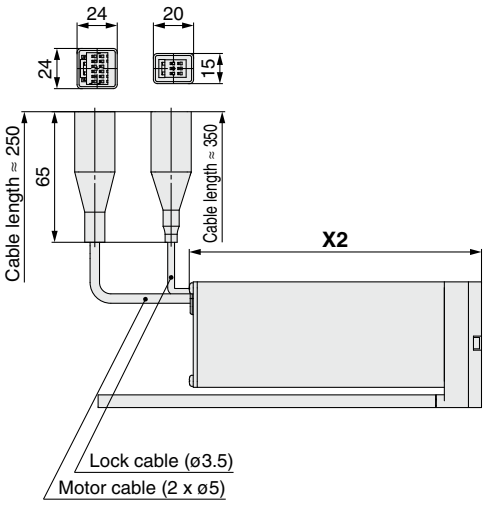

*1 This is the range within which the rod can move when it returns to origin. Make sure that workpieces mounted on the rod do not interfere with other workpieces or the facilities around the rod.
*2 Position after returning to origin
*3 [ ] for when the direction of return to origin has changed
*4 The direction of rod end width across flats differs depending on the products.

Dimensions

[mm]

Stroke range [mm]	A	B	MC	MD	ML	X2 With motor cover	X2 With lock/ motor cover
30 to 35	101	90.5	17	23.5	40	100.5	145.5
40 to 100			32	31			
105 to 300	121	110.5	62	46	60		

Dimensions: Top Side Parallel Motor

LEY25G

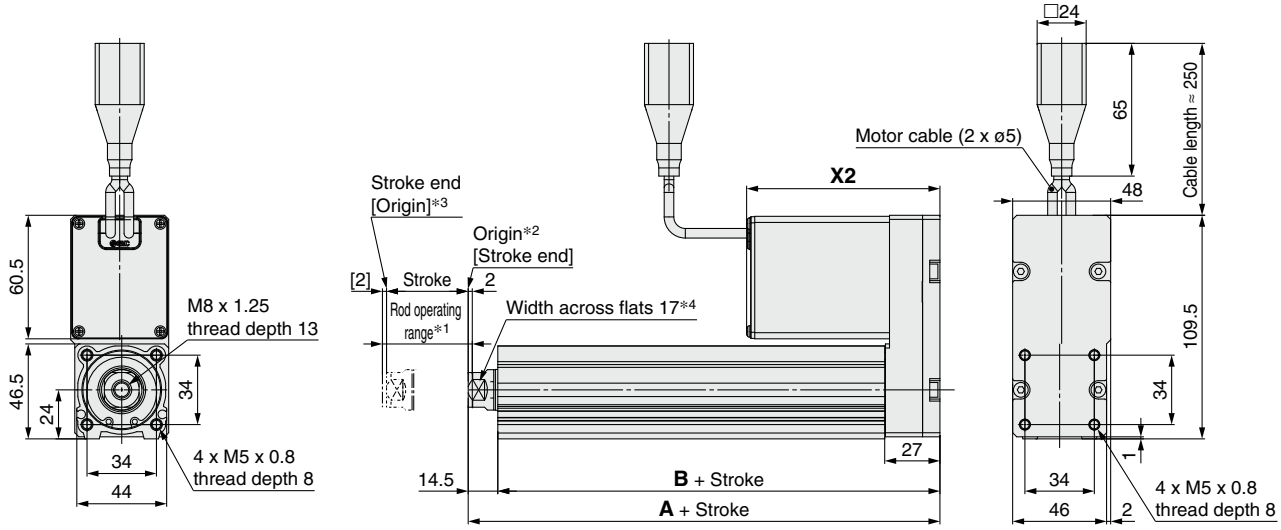

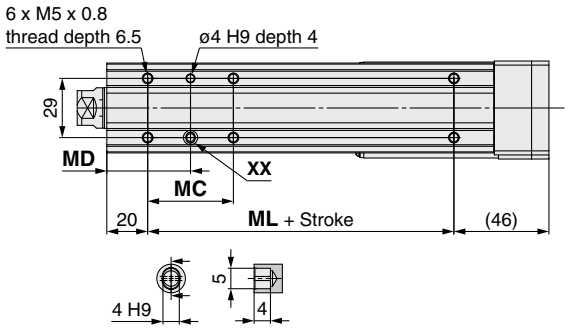

XX (2:1)

Motor option: With lock/motor cover

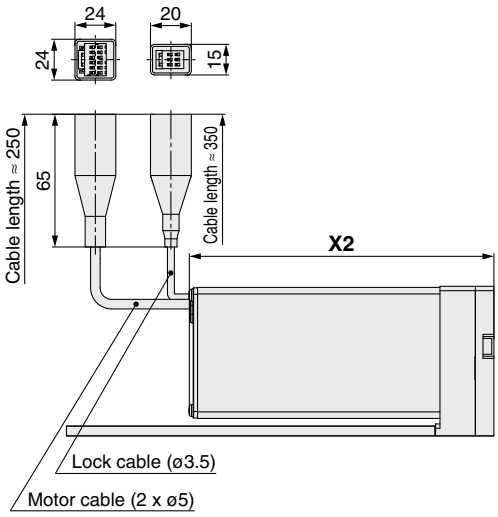

*1 This is the range within which the rod can move when it returns to origin. Make sure that workpieces mounted on the rod do not interfere with other workpieces or the facilities around the rod.
*2 Position after returning to origin
*3 [ ] for when the direction of return to origin has changed
*4 The direction of rod end width across flats differs depending on the products.

Dimensions

[mm]

Stroke range [mm]	A	B	MC	MD	ML	X2 With motor cover	X2 With lock/ motor cover
30 to 35	130.5	116	24	32	50	95	140
40 to 100			42	41			
105 to 120	155.5	141			75		
125 to 200			59	49.5			
205 to 400			76	58			

Dimensions: Top Side Parallel Motor

LEY40G

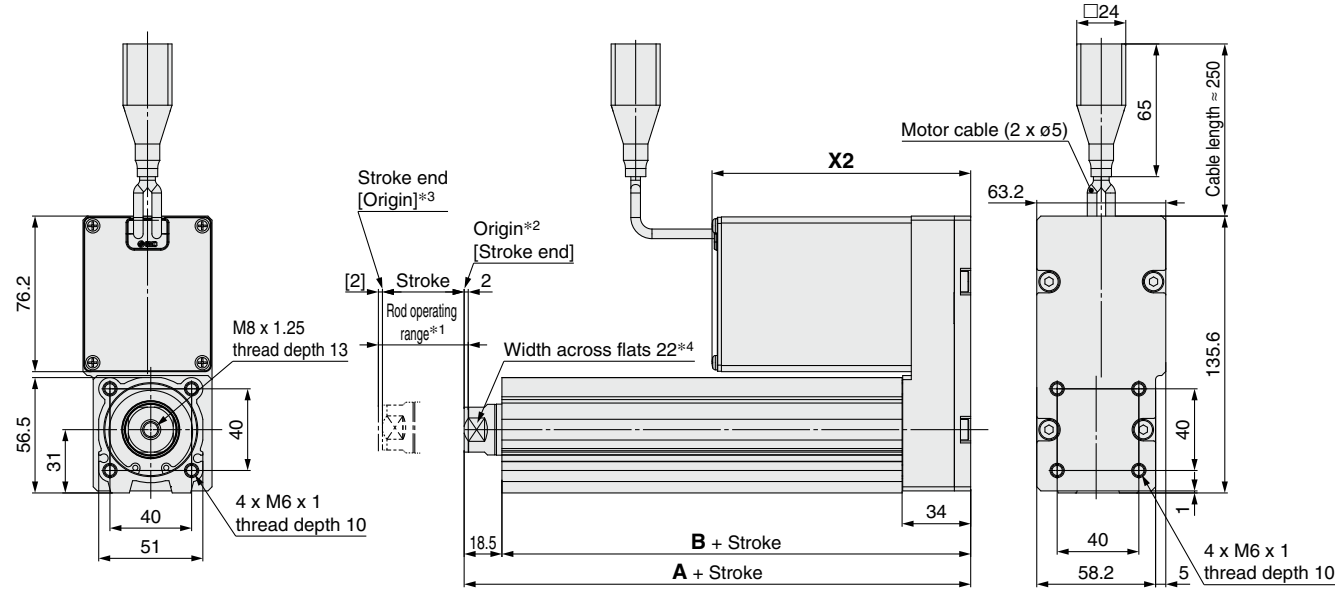

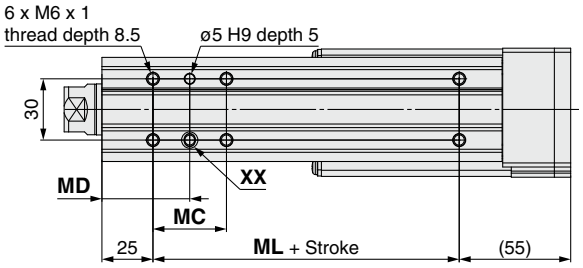

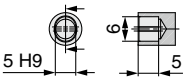

XX (2:1)

Motor option: With lock/motor cover

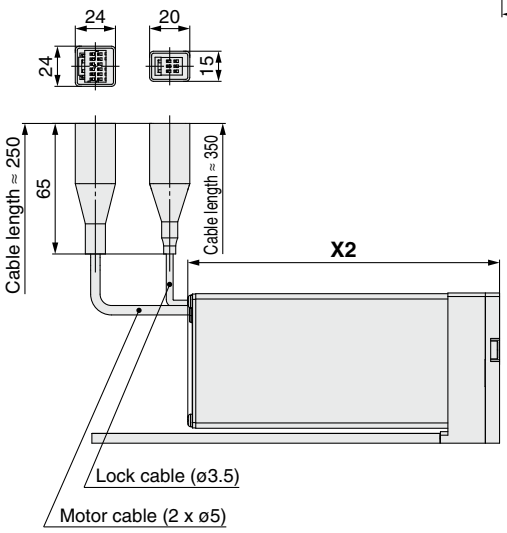

*1 This is the range within which the rod can move when it returns to origin. Make sure that workpieces mounted on the rod do not interfere with other workpieces or the facilities around the rod.
*2 Position after returning to origin
*3 [ ] for when the direction of return to origin has changed
*4 The direction of rod end width across flats differs depending on the products.

Dimensions

[mm]

Stroke range [mm]	A	B	MC	MD	ML	X2 With motor cover	X2 With lock/ motor cover
30 to 35	148.5	130	22	36	50	127	176
40 to 100			36	43			
105 to 120	178.5	160			80		
125 to 200			53	51.5			
205 to 500			70	60			

Dimensions: In-line Motor

LEY16DG

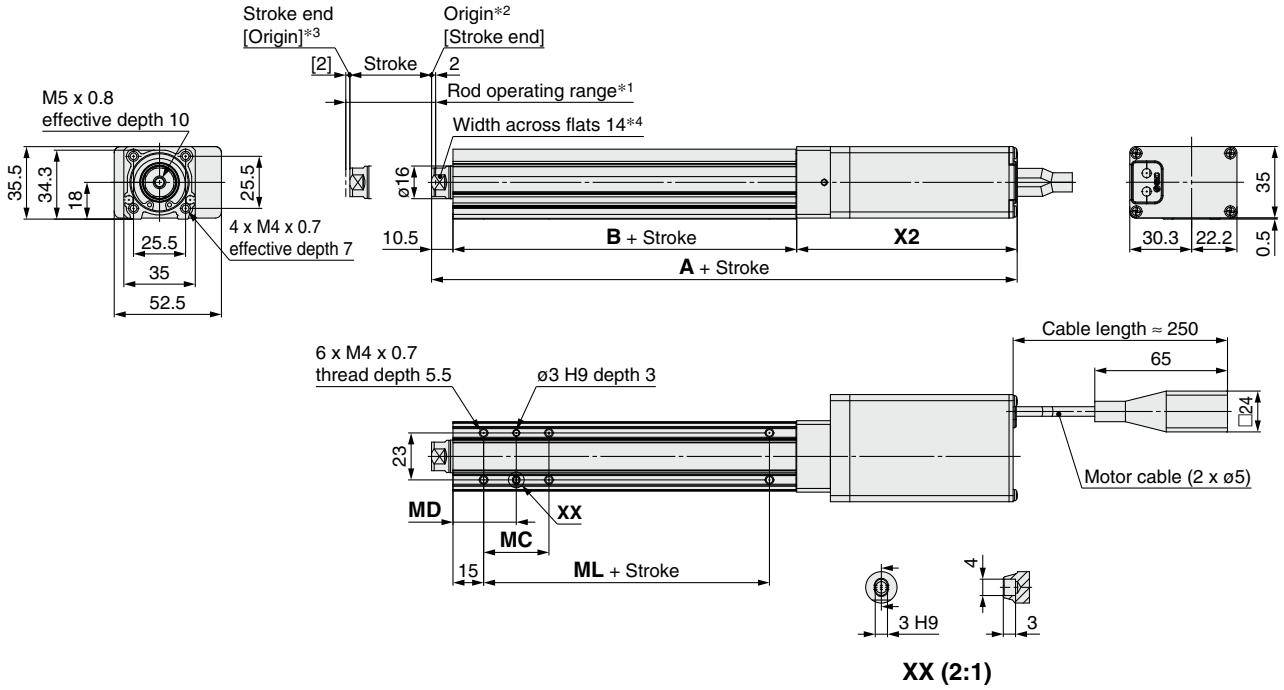

Motor option: With lock/motor cover

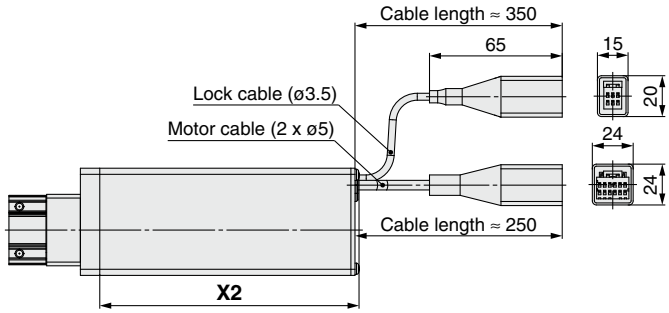

Motor Mounting Position/Motor Cover Direction

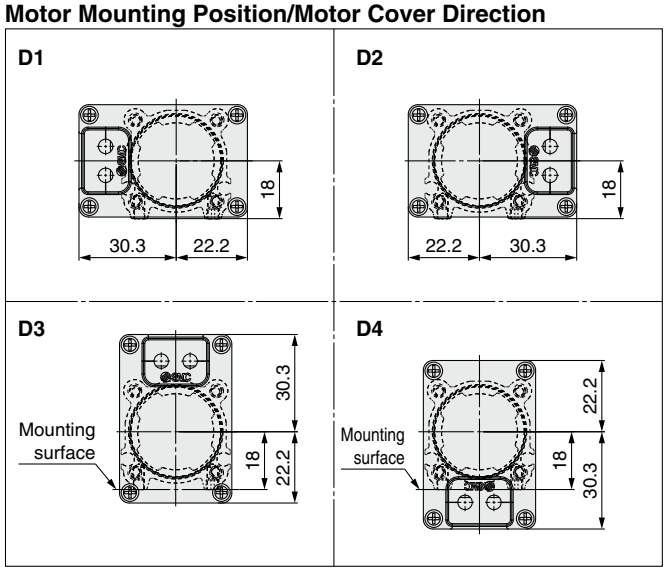

*1 This is the range within which the rod can move when it returns to origin. Make sure that workpieces mounted on the rod do not interfere with other workpieces or the facilities around the rod.
*2 Position after returning to origin
*3 [ ] for when the direction of return to origin has changed
*4 The direction of rod end width across flats differs depending on the products.

Dimensions

[mm]

Stroke range [mm]	A		B	MC	MD	ML	X2	
	With motor cover	With lock/ motor cover					With motor cover	With lock/ motor cover
30 to 35	186.5	231.5	68	17	23.5	40	108	153
40 to 100				32	31			
105 to 300	206.5	251.5	88	62	46	60		

Dimensions: In-line Motor

LEY25DG

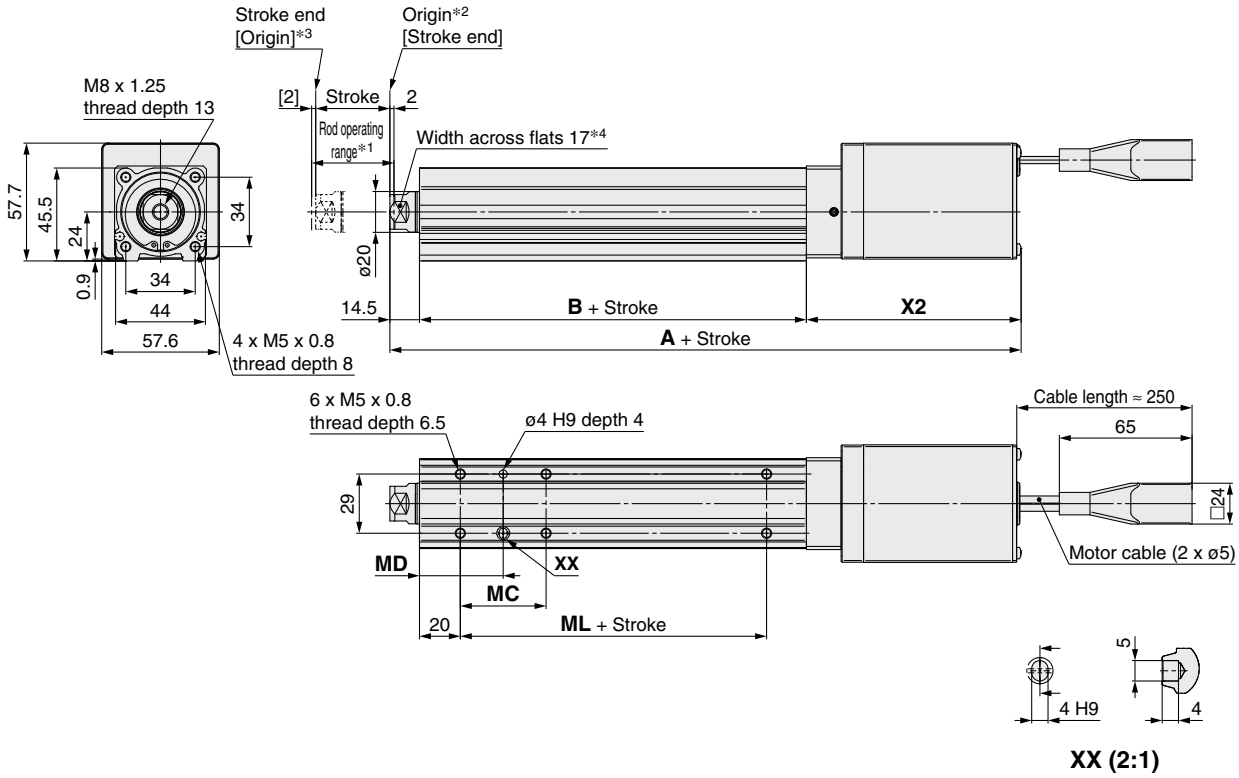

Motor option: With lock/motor cover

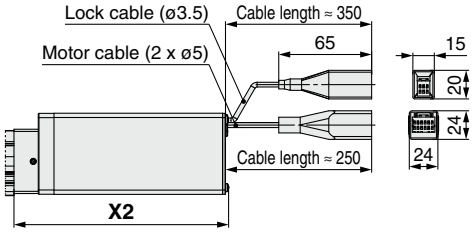

*1 This is the range within which the rod can move when it returns to origin. Make sure that workpieces mounted on the rod do not interfere with other workpieces or the facilities around the rod.
*2 Position after returning to origin
*3 [ ] for when the direction of return to origin has changed
*4 The direction of rod end width across flats differs depending on the products.

Dimensions

[mm]

Stroke range [mm]	A		B	MC	MD	ML	X2	
	With motor cover	With lock/ motor cover					With motor cover	With lock/ motor cover
30 to 35	209	254	89.5	24	32	50	105	150
40 to 100				42	41			
105 to 120	234	279	114.5			75		
125 to 200				59	49.5			
205 to 400				76	58			

Dimensions: In-line Motor

LEY40DG

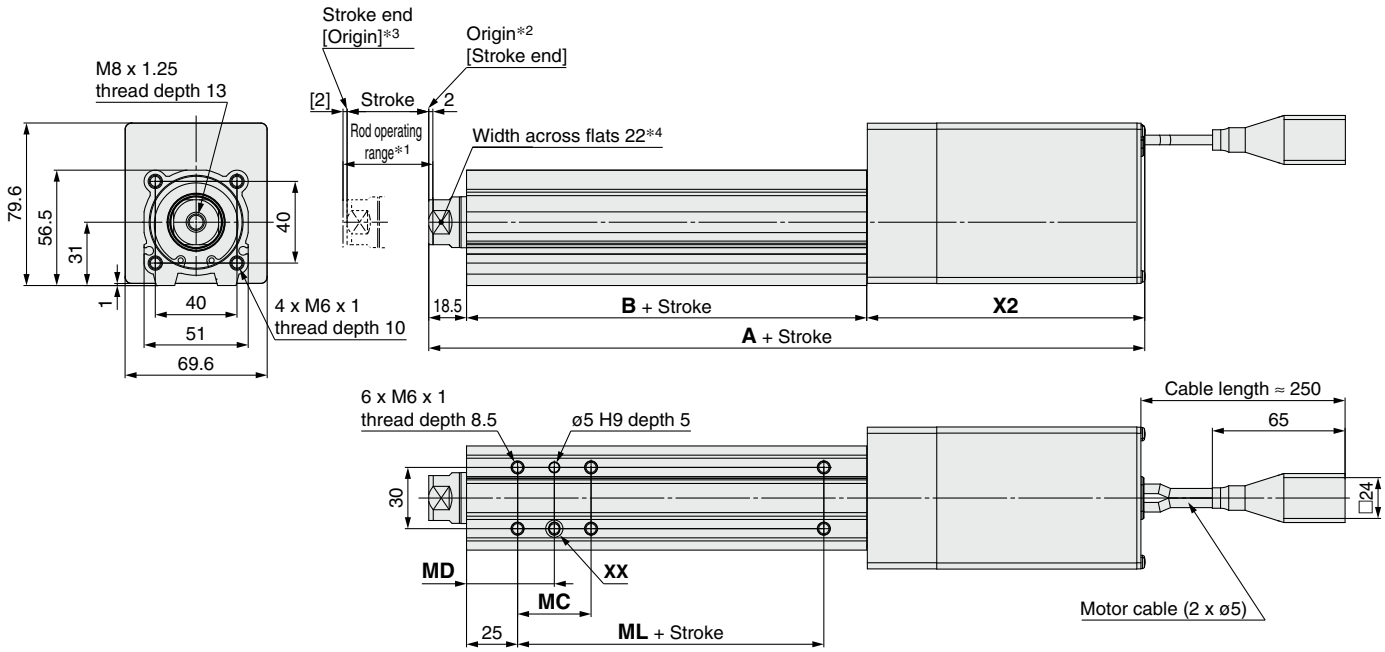

XX (2:1)

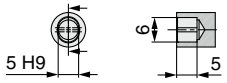

Motor option: With lock/motor cover

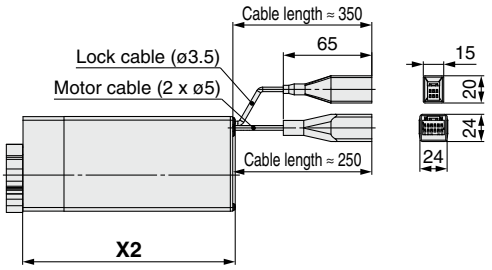

*1 This is the range within which the rod can move when it returns to origin. Make sure that workpieces mounted on the rod do not interfere with other workpieces or the facilities around the rod.
*2 Position after returning to origin
*3 [ ] for when the direction of return to origin has changed
*4 The direction of rod end width across flats differs depending on the products.

Dimensions

[mm]

Stroke range [mm]	A		B	MC	MD	ML	X2	
	With motor cover	With lock/ motor cover					With motor cover	With lock/ motor cover
30 to 35	250.5	290.5	96	22	36	50	136	176
40 to 100				36	43			
105 to 120	280.5	320.5	126			80		
125 to 200				53	51.5			
205 to 500				70	60			

Dimensions

End male thread: LEY$\begin{matrix}16\\25\\40\end{matrix}$□G$\begin{matrix}A\\B\\C\end{matrix}$-□□M

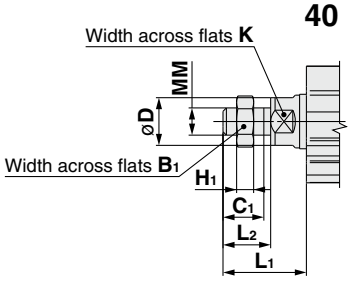

[mm]

Size	B_1	C_1	øD	H_1	K	L_1	L_2	MM
16	13	12	16	5	14	24.5	14	M8 x 1.25
25	22	20.5	20	8	17	38	23.5	M14 x 1.5
40	22	20.5	25	8	22	42	23.5	M14 x 1.5

∗ The L_1 measurement is when the unit is in the original position. At this position, 2 mm at the end.

∗ Refer to the **Web Catalog** for details on the rod end nut and mounting bracket.
∗ Refer to the specific product precautions ("Handling") in the **Web Catalog** when mounting end brackets such as knuckle joint or workpieces.

Foot bracket: LEY$\begin{matrix}16\\25\\40\end{matrix}G\begin{matrix}A\\B\\C\end{matrix}$-□□□L

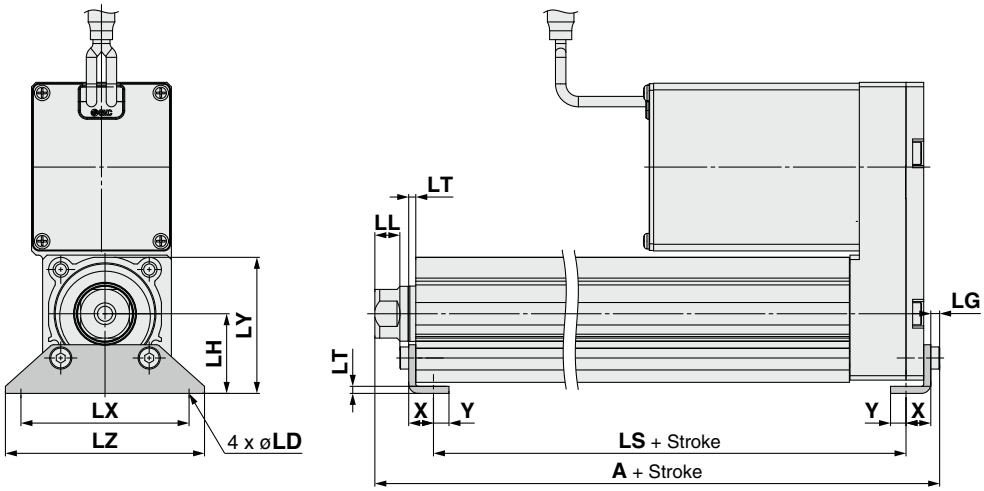

Outward mounting

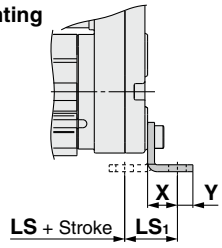

Included parts
· Foot bracket
· Body mounting bolt

Foot Bracket

[mm]

Size	Stroke range [mm]	A	LS	LS_1	LL	LD	LG	LH	LT	LX	LY	LZ	X	Y
16	30 to 100	106.1	76.7	16.1	5.4	6.6	2.8	24	2.3	48	40.3	62	9.2	5.8
	101 to 300	126.1	96.7											
25	30 to 100	136.6	98.8	19.8	8.4	6.6	3.5	30	2.6	57	51.5	71	11.2	5.8
	101 to 400	161.6	123.8											
40	30 to 100	155.7	114	19.2	11.3	6.6	4	36	3.2	76	61.5	90	11.2	7
	101 to 500	185.7	144											

Material: Carbon steel (Chromating)
∗ The A measurement is when the unit is in the original position. At this position, 2 mm at the end.
∗ When the motor mounting is the right or left side parallel type, the head side foot bracket should be mounted outward.

Dimensions

Rod flange: LEY16□GB$^{A}_{C}$-□□□F

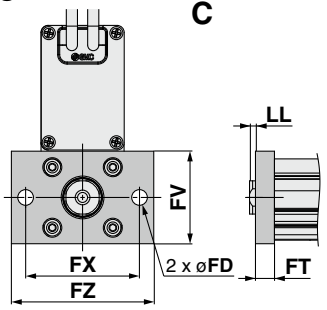

Head flange: LEY16GB$^{A}_{C}$-□□□G

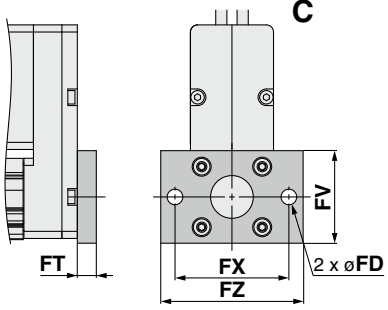

Rod flange: LEY$^{25}_{40}$□GB$^{A}_{C}$-□□□F

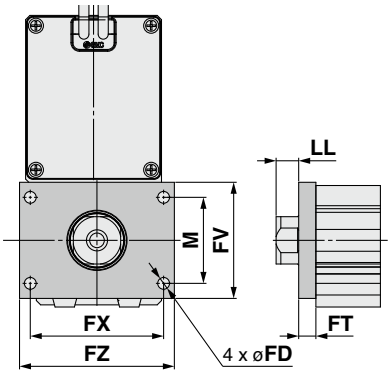

Head flange: LEY25GB$^{A}_{C}$-□□□G

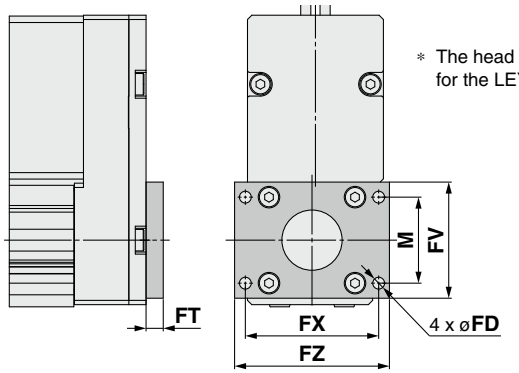

∗ The head flange type is not available for the LEY40.

Included parts
· Flange
· Body mounting bolt

Rod/Head Flange [mm]

Size	FD	FT	FV	FX	FZ	LL	M
16	6.6	8	39	48	60	2.5	—
25	5.5	8	48	56	65	6.5	34
40	5.5	8	54	62	72	10.5	40

Material: Carbon steel (Nickel plating)

Double clevis: LEY16GB$^{A}_{C}$-□□□D

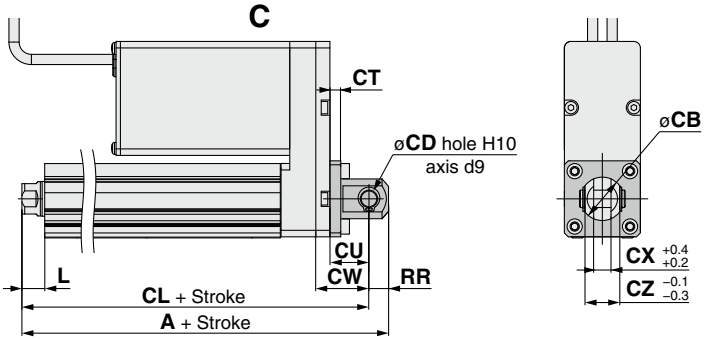

Included parts
· Double clevis
· Body mounting bolt
· Clevis pin
· Retaining ring

∗ Refer to the **Web Catalog** for details on the rod end nut and mounting bracket.

Double clevis: LEY$^{25}_{40}$GB$^{A}_{C}$-□□□D

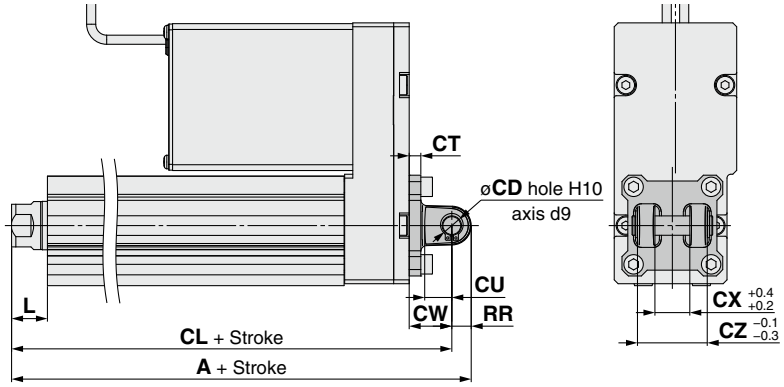

Double Clevis [mm]

Size	Stroke range [mm]	A	CL	CB	CD	CT
16	30 to 100	128	119	20	8	5
25	30 to 100	160.5	150.5	—	10	5
	101 to 200	185.5	175.5			
40	30 to 100	180.5	170.5	—	10	6
	101 to 200	210.5	200.5			

Size	Stroke range [mm]	CU	CW	CX	CZ	L	RR
16	30 to 100	12	18	8	16	10.5	9
25	30 to 100	14	20	18	36	14.5	10
	101 to 200						
40	30 to 100	14	22	18	36	18.5	10
	101 to 200						

Material: Cast iron (Coating)
∗ The A and CL measurements are when the unit is in the original position. At this position, 2 mm at the end.

For the models and dimensions of the mounting bracket and simple joint bracket, refer to the **Web Catalog** for the LEY series.

LEY□G Series
Auto Switch Mounting

Auto Switch Proper Mounting Position

Applicable auto switch: D-M9□(V), D-M9□E(V), D-M9□W(V), D-M9□A(V)

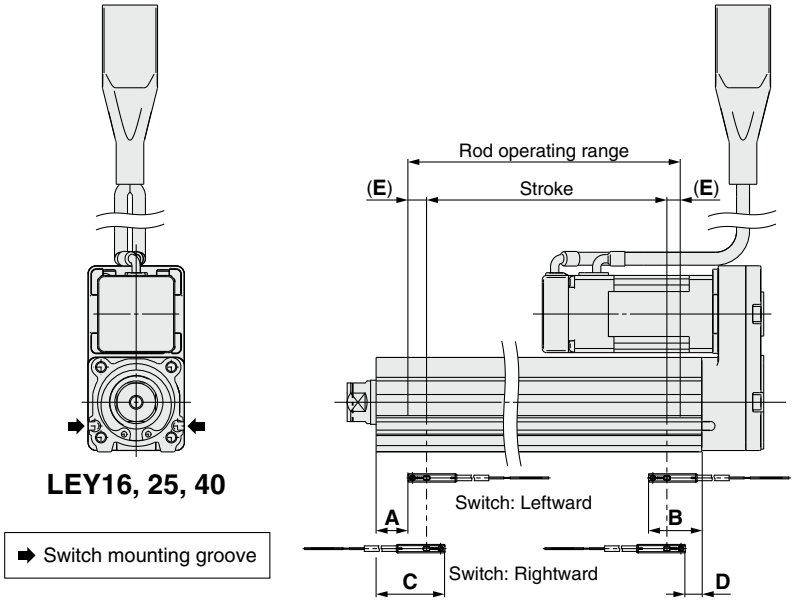

[mm]

Size	Stroke range	Auto switch position				Return to origin distance	Operating range
		Leftward mounting		Rightward mounting			
		A	B	C	D	E	—
16	30 to 100	21.5	46.5	33.5	34.5	(2)	2.9
	105 to 300	41.5		53.5			
25	30 to 100	27	62.5	39	50.5	(2)	4.2
	105 to 400	52		64			
40	30 to 100	30.5	65.5	42.5	53.5	(2)	4.9
	105 to 500	60.5		72.5			

∗ The values in the table above are to be used as a reference when mounting auto switches for stroke end detection. Adjust the auto switch after confirming the operating conditions in the actual setting.
∗ An auto switch cannot be mounted on the same side as a motor.
∗ For LEYG series models (with a guide), an auto switch cannot be mounted on the guide attachment side (rod side).
∗ Since the operating range is provided as a guideline including hysteresis, it cannot be guaranteed (assuming approx. ±30% dispersion). It may change substantially depending on the ambient environment.

Auto Switch Mounting

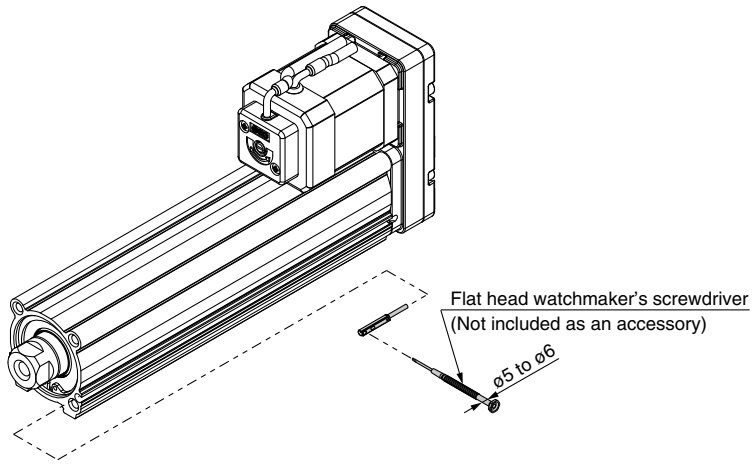

Tightening Torque for Auto Switch Mounting Screw

[N·m]

Auto switch model	Tightening torque
D-M9□(V) **D-M9□E(V)** **D-M9□W(V)**	0.05 to 0.15
D-M9□A(V)	0.05 to 0.10

∗ When tightening the auto switch mounting screw (included with the auto switch), use a watchmaker's screwdriver with a handle diameter of 5 to 6 mm.

Solid State Auto Switch Direct Mounting Type
D-M9N(V)/D-M9P(V)/D-M9B(V) CE RoHS

Refer to the SMC website for details on products that are compliant with international standards.

Grommet

- **2-wire load current is reduced (2.5 to 40 mA).**
- **Using flexible cable as standard spec.**

Auto Switch Specifications

PLC: Programmable Logic Controller

D-M9□, D-M9□V (With indicator light)						
Auto switch model	D-M9N	D-M9NV	D-M9P	D-M9PV	D-M9B	D-M9BV
Electrical entry direction	In-line	Perpendicular	In-line	Perpendicular	In-line	Perpendicular
Wiring type	3-wire				2-wire	
Output type	NPN		PNP		—	
Applicable load	IC circuit, Relay, PLC				24 VDC relay, PLC	
Power supply voltage	5, 12, 24 VDC (4.5 to 28 V)				—	
Current consumption	10 mA or less				—	
Load voltage	28 VDC or less		—		24 VDC (10 to 28 VDC)	
Load current	40 mA or less				2.5 to 40 mA	
Internal voltage drop	0.8 V or less at 10 mA (2 V or less at 40 mA)				4 V or less	
Leakage current	100 μA or less at 24 VDC				0.8 mA or less	
Indicator light	Red LED illuminates when turned ON.					
Standard	CE marking, RoHS					

Oilproof Flexible Heavy-duty Lead Wire Specifications

Auto switch model		D-M9N(V)	D-M9P(V)	D-M9B(V)
Sheath	Outside diameter [mm]	2.6		
Insulator	Number of cores	3 cores (Brown/Blue/Black)		2 cores (Brown/Blue)
	Outside diameter [mm]	0.88		
Conductor	Effective area [mm²]	0.15		
	Strand diameter [mm]	0.05		
Min. bending radius [mm] (Reference values)		17		

∗ Refer to the **Web Catalog** for solid state auto switch common specifications.
∗ Refer to the **Web Catalog** for lead wire lengths.

⚠Caution

Precautions

Fix the auto switch with the existing screw installed on the auto switch body. The auto switch may be damaged if a screw other than the one supplied is used.

Weight

[g]

Auto switch model		D-M9N(V)	D-M9P(V)	D-M9B(V)
Lead wire length	0.5 m (**Nil**)	8		7
	1 m (**M**)	14		13
	3 m (**L**)	41		38
	5 m (**Z**)	68		63

Dimensions

[mm]

D-M9□

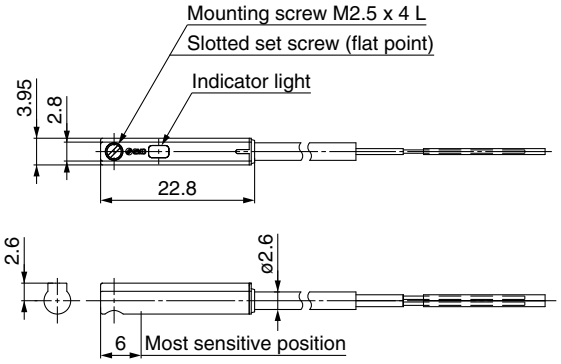

D-M9□V

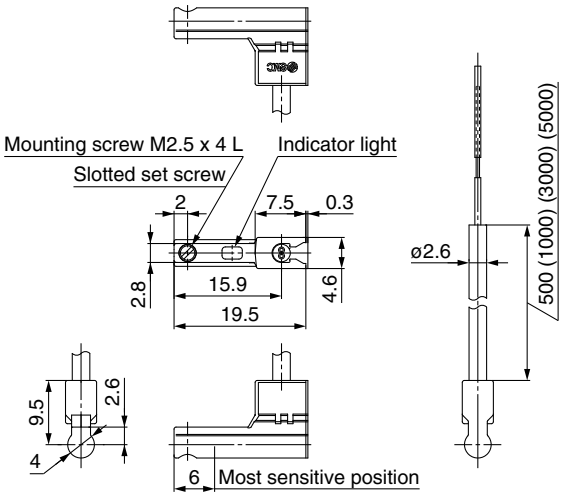

Normally Closed Solid State Auto Switch Direct Mounting Type
D-M9NE(V)/D-M9PE(V)/D-M9BE(V)

RoHS

Refer to the SMC website for details on products that are compliant with international standards.

Grommet

- **Output signal turns on when no magnetic force is detected.**
- **Can be used for the actuator adopted by the solid state auto switch D-M9 series (excluding special order products)**

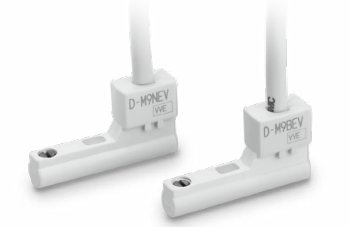

⚠Caution

Precautions

Fix the auto switch with the existing screw installed on the auto switch body. The auto switch may be damaged if a screw other than the one supplied is used.

Auto Switch Specifications

PLC: Programmable Logic Controller

D-M9□E, D-M9□EV (With indicator light)						
Auto switch model	D-M9NE	D-M9NEV	D-M9PE	D-M9PEV	D-M9BE	D-M9BEV
Electrical entry direction	In-line	Perpendicular	In-line	Perpendicular	In-line	Perpendicular
Wiring type	3-wire				2-wire	
Output type	NPN		PNP		—	
Applicable load	IC circuit, Relay, PLC				24 VDC relay, PLC	
Power supply voltage	5, 12, 24 VDC (4.5 to 28 V)				—	
Current consumption	10 mA or less				—	
Load voltage	28 VDC or less		—		24 VDC (10 to 28 VDC)	
Load current	40 mA or less				2.5 to 40 mA	
Internal voltage drop	0.8 V or less at 10 mA (2 V or less at 40 mA)				4 V or less	
Leakage current	100 μA or less at 24 VDC				0.8 mA or less	
Indicator light	Red LED illuminates when turned ON.					
Standard	CE marking, RoHS					

Oilproof Flexible Heavy-duty Lead Wire Specifications

Auto switch model		D-M9NE(V)	D-M9PE(V)	D-M9BE(V)
Sheath	Outside diameter [mm]	2.6		
Insulator	Number of cores	3 cores (Brown/Blue/Black)		2 cores (Brown/Blue)
	Outside diameter [mm]	0.88		
Conductor	Effective area [mm²]	0.15		
	Strand diameter [mm]	0.05		
Min. bending radius [mm] (Reference values)		17		

∗ Refer to the **Web Catalog** for solid state auto switch common specifications.
∗ Refer to the **Web Catalog** for lead wire lengths.

Weight

[g]

Auto switch model		D-M9NE(V)	D-M9PE(V)	D-M9BE(V)
Lead wire length	0.5 m (**Nil**)	8		7
	1 m (**M**)∗1	14		13
	3 m (**L**)	41		38
	5 m (**Z**)∗1	68		63

∗1 The 1 m and 5 m options are produced upon receipt of order.

Dimensions

[mm]

D-M9□E

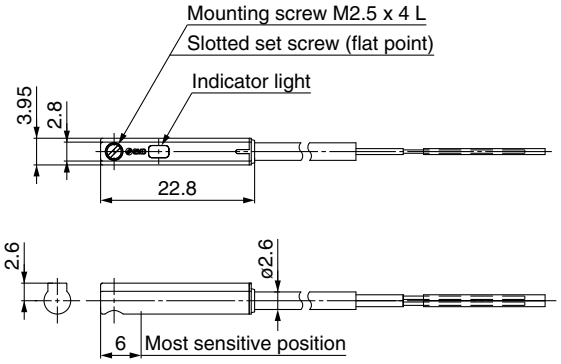

D-M9□EV

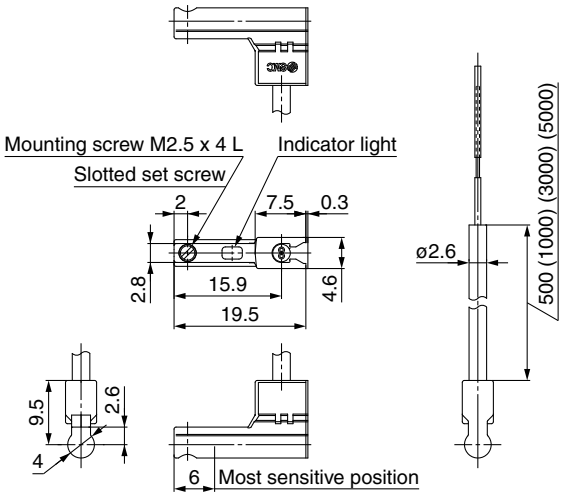

2-Color Indicator Solid State Auto Switch Direct Mounting Type
D-M9NW(V)/D-M9PW(V)/D-M9BW(V) CE RoHS

Refer to the SMC website for details on products that are compliant with international standards.

Grommet

- **2-wire load current is reduced (2.5 to 40 mA).**
- **Using flexible cable as standard spec.**
- **The proper operating range can be determined by the color of the light. (Red → Green ← Red)**

⚠Caution

Precautions

Fix the auto switch with the existing screw installed on the auto switch body. The auto switch may be damaged if a screw other than the one supplied is used.

Auto Switch Specifications

PLC: Programmable Logic Controller

D-M9□W, D-M9□WV (With indicator light)						
Auto switch model	D-M9NW	D-M9NWV	D-M9PW	D-M9PWV	D-M9BW	D-M9BWV
Electrical entry direction	In-line	Perpendicular	In-line	Perpendicular	In-line	Perpendicular
Wiring type	3-wire				2-wire	
Output type	NPN		PNP		—	
Applicable load	IC circuit, Relay, PLC				24 VDC relay, PLC	
Power supply voltage	5, 12, 24 VDC (4.5 to 28 V)				—	
Current consumption	10 mA or less				—	
Load voltage	28 VDC or less		—		24 VDC (10 to 28 VDC)	
Load current	40 mA or less				2.5 to 40 mA	
Internal voltage drop	0.8 V or less at 10 mA (2 V or less at 40 mA)				4 V or less	
Leakage current	100 μA or less at 24 VDC				0.8 mA or less	
Indicator light	Operating range ····· Red LED illuminates. Proper operating range ····· Green LED illuminates.					
Standard	CE marking, RoHS					

Oilproof Flexible Heavy-duty Lead Wire Specifications

Auto switch model		D-M9NW(V)	D-M9PW(V)	D-M9BW(V)
Sheath	Outside diameter [mm]	2.6		
Insulator	Number of cores	3 cores (Brown/Blue/Black)		2 cores (Brown/Blue)
	Outside diameter [mm]	0.88		
Conductor	Effective area [mm²]	0.15		
	Strand diameter [mm]	0.05		
Min. bending radius [mm] (Reference values)		17		

∗ Refer to the **Web Catalog** for solid state auto switch common specifications.
∗ Refer to the **Web Catalog** for lead wire lengths.

Weight

[g]

Auto switch model		D-M9NW(V)	D-M9PW(V)	D-M9BW(V)
Lead wire length	0.5 m (**Nil**)	8		7
	1 m (**M**)	14		13
	3 m (**L**)	41		38
	5 m (**Z**)	68		63

Dimensions

[mm]

D-M9□W

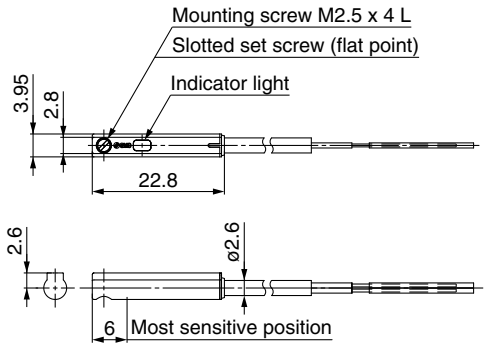

D-M9□WV

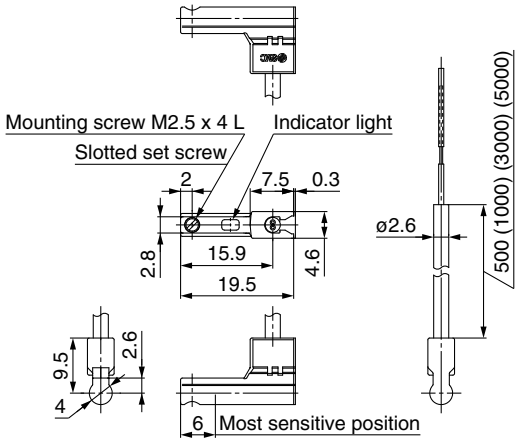

Controllers
JXC□ Series

For details, refer to page 49.

Step Data Input Type p. 35

High Performance

Battery-less Absolute (Step Motor 24 VDC)

JXC5H/6H Series

EtherCAT/EtherNet/IP™/PROFINET Direct Input Type p. 42

High Performance

Battery-less Absolute (Step Motor 24 VDC)

JXCEH/9H/PH Series

EtherCAT®

EtherNet/IP®

PROFINET®

● **Actuator Cable** p. 47

High Performance Controller (Step Data Input Type)

JXC5H/6H Series

For details, refer to page 49.

RoHS

How to Order

JXC 5 H 7 3 – □

❶ ❷ ❸ ❹ ❺

❶ Controller type

5	Parallel I/O (NPN) type
6	Parallel I/O (PNP) type

❷ Specification

H	1 axis/High performance type

❸ Mounting

7	Screw mounting
8	DIN rail

❹ I/O cable length

Nil	None
1	1.5 m
3	3 m
5	5 m

❺ Actuator part number

Without cable specifications and actuator options Example: Enter "**LEY25GA-100**" for the LEY25GA-100B-R1□.	
BC	Blank controller*1

*1 Requires dedicated software (JXC-BCW)

The controller is sold as single unit after the compatible actuator is set.

Connect to an actuator (LEY□G) designated for a high performance controller. Confirm that the combination of the controller and actuator is correct.

<Check the following before use.>

① Check the actuator label for the model number. This number should match that of the controller.

② Check that the Parallel I/O configuration matches (NPN or PNP).

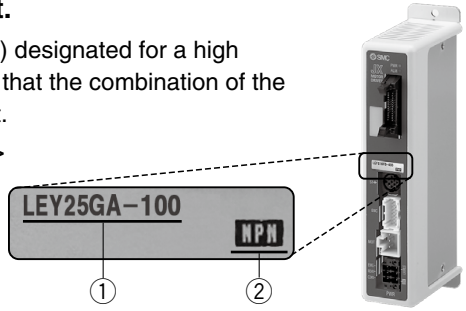

* Refer to the operation manual for using the products. Please download it via our website: https://www.smcworld.com

Precautions for blank controllers (JXC□1□□-BC)

A blank controller is a controller to which the customer can write the data of the actuator it is to be combined and used with. For data writing, use the controller setting software ACT Controller 2 or the dedicated software JXC-BCW.

- Both ACT Controller 2 and JXC-BCW can be downloaded from the SMC website.
- To use this software, order the communication cable for controller setting (JXC-W2A-C) and the USB cable (LEC-W2-U) separately.

Hardware Requirements

OS	Windows®10 (64 bit)	Windows®7
		Windows®8
		Windows®10
Software	ACT Controller 2 (With JXC-BCW function)	JXC-BCW

* Windows®7, Windows®8, and Windows®10 are registered trademarks of Microsoft Corporation in the United States.

SMC website
https://www.smcworld.com

Specifications

Model	JXC5H JXC6H
Compatible motor	Step motor (Servo/24 VDC)
Power supply	Power supply voltage: 24 VDC ±10%
Current consumption (Controller)	100 mA or less
Compatible encoder	Battery-less absolute encoder
Parallel input	11 inputs (Photo-coupler isolation)
Parallel output	13 outputs (Photo-coupler isolation)
Serial communication	RS485 (Only for the LEC-T1 and JXC-W2)
Memory	EEPROM
LED indicator	PWR, ALM
Cable length [m]	Actuator cable: 20 or less
Cooling system	Natural air cooling
Operating temperature range [°C]	0 to 40
Operating humidity range [%RH]	90 or less (No condensation)
Insulation resistance [MΩ]	Between all external terminals and the case: 50 (500 VDC)
Weight [g]	180 (Screw mounting), 200 (DIN rail mounting)

⚠Caution

[CE/UKCA-compliant products]
EMC compliance was tested by combining the electric actuator LE series and the JXC5H/6H series.
The EMC depends on the configuration of the customer's control panel and the relationship with other electrical equipment and wiring.
Therefore, compliance with the EMC directive cannot be certified for SMC components incorporated into the customer's equipment under actual operating conditions. As a result, it is necessary for the customer to verify compliance with the EMC directive for the machinery and equipment as a whole.

How to Mount

a) Screw mounting (JXC□H7□)
(Installation with two M4 screws)

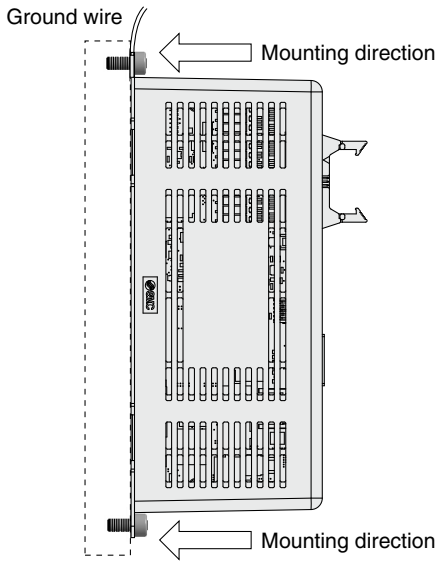

b) DIN rail mounting (JXC□H8□)
(Installation with the DIN rail)

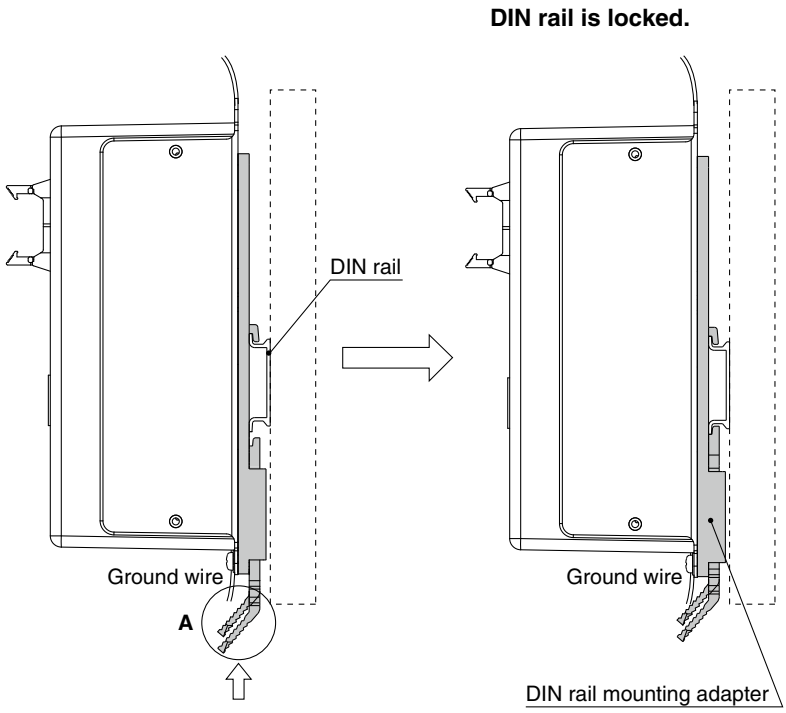

Hook the controller on the DIN rail and press the lever of section **A** in the arrow direction to lock it.

∗ When size 25 or more of the LE series are used, the space between the controllers should be 10 mm or more.

DIN rail
AXT100-DR-□

∗ For □, enter a number from the No. line in the table below.
Refer to the dimension drawings on page 37 for the mounting dimensions.

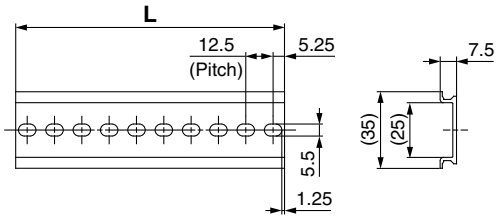

L Dimensions [mm]

No.	1	2	3	4	5	6	7	8	9	10	11	12	13	14	15	16	17	18	19	20
L	23	35.5	48	60.5	73	85.5	98	110.5	123	135.5	148	160.5	173	185.5	198	210.5	223	235.5	248	260.5

No.	21	22	23	24	25	26	27	28	29	30	31	32	33	34	35	36	37	38	39	40
L	273	285.5	298	310.5	323	335.5	348	360.5	373	385.5	398	410.5	423	435.5	448	460.5	473	485.5	498	510.5

DIN rail mounting adapter
LEC-3-D0 (with 2 mounting screws)

This should be used when the DIN rail mounting adapter is mounted onto a screw mounting type controller afterward.

Dimensions

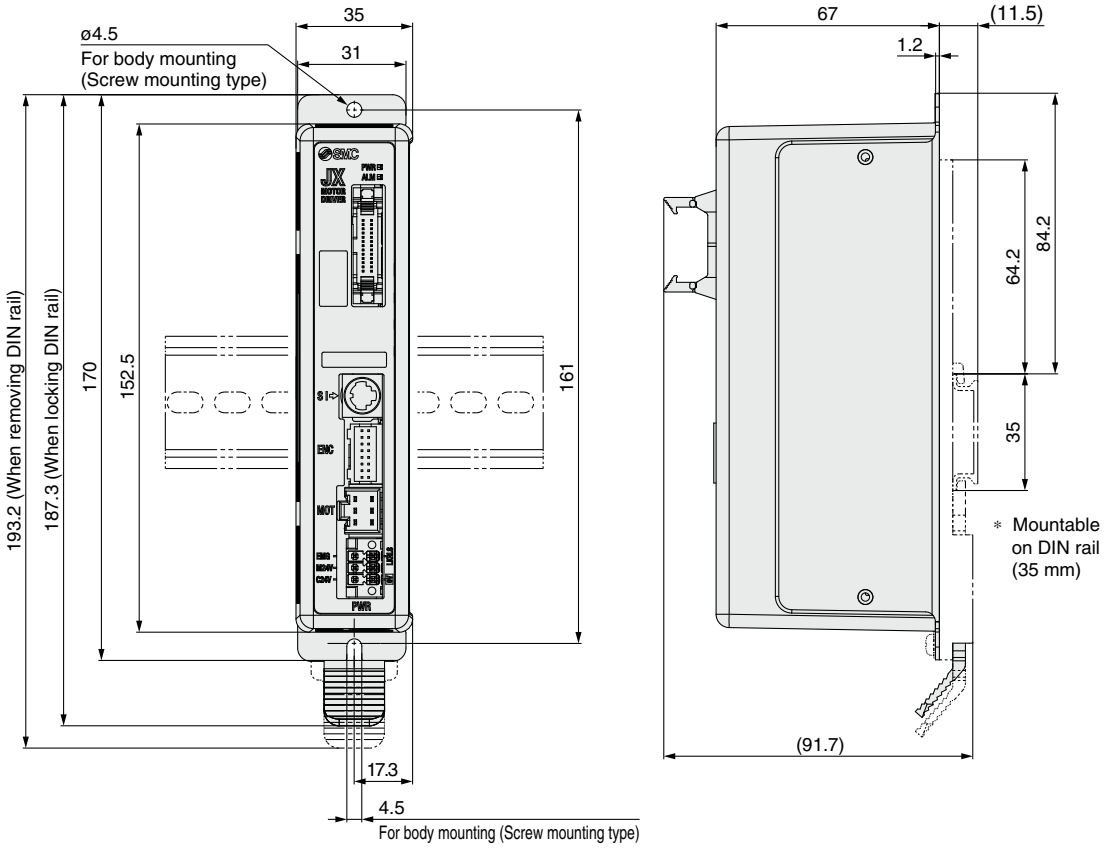
35
31
ø4.5
For body mounting
(Screw mounting type)
193.2 (When removing DIN rail)
187.3 (When locking DIN rail)
170
152.5
161
17.3
4.5
For body mounting (Screw mounting type)
67
(11.5)
1.2
84.2
64.2
35
* Mountable
on DIN rail
(35 mm)
(91.7)

Wiring Example 1

Parallel I/O Connector

∗ When you connect a PLC to the parallel I/O connector, use the I/O cable (LEC-CN5-□).
∗ The wiring changes depending on the type of parallel I/O (NPN or PNP).

Wiring diagram

JXC5H□□ (NPN)

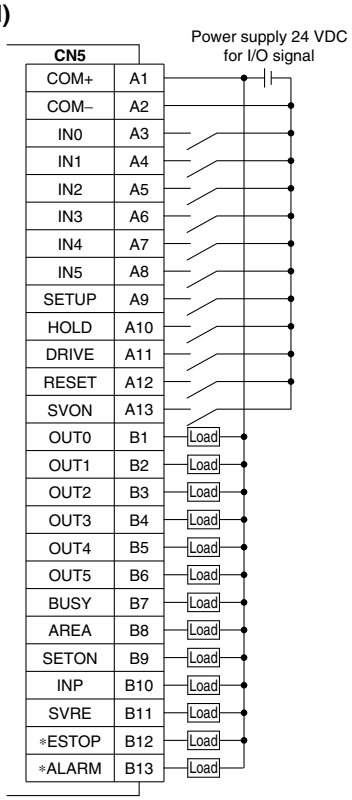

JXC6H□□ (PNP)

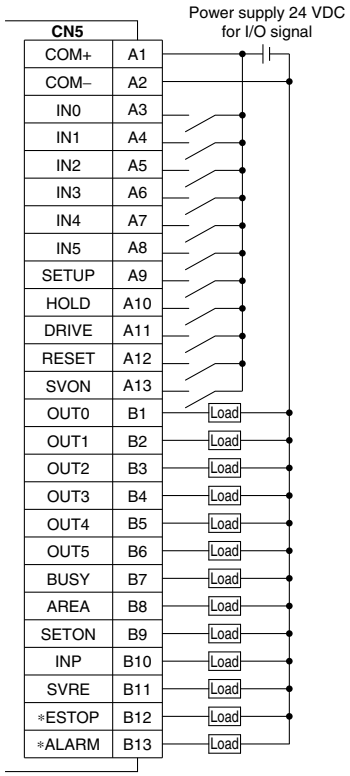

Input Signal

Name	Details
COM+	Connects the power supply 24 V for input/output signal
COM–	Connects the power supply 0 V for input/output signal
IN0 to IN5	Step data specified bit no. (Input is instructed by combining IN0 to 5.)
SETUP	Instruction to return to origin
HOLD	Temporarily stops operation
DRIVE	Instruction to drive
RESET	Resets alarm and interrupts operation
SVON	Servo ON instruction

Output Signal

Name	Details
OUT0 to OUT5	Outputs the step data no. during operation
BUSY	Outputs when the actuator is moving
AREA	Outputs within the step data area output setting range
SETON	Outputs when returning to origin
INP	Outputs when target position or target force is reached (Turns on when the positioning or pushing is completed.)
SVRE	Outputs when servo is on
∗ESTOP∗1	OFF when EMG stop is instructed
∗ALARM∗1	OFF when alarm is generated

∗1 Signal of negative-logic circuit (N.C.)

Step Data Setting

1. Step data setting for positioning

In this setting, the actuator moves toward and stops at the target position.
The following diagram shows the setting items and operation.
The setting items and set values for this operation are stated below.

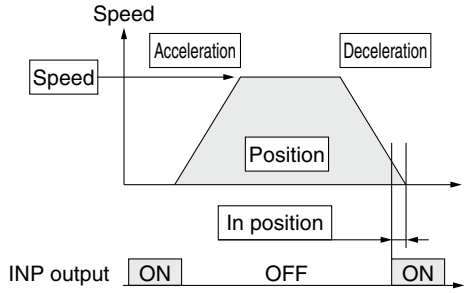

◎: Need to be set.
○: Need to be adjusted as required.
—: Setting is not required.

Step Data (Positioning)

Necessity	Item	Details
◎	Movement MOD	When the absolute position is required, set Absolute. When the relative position is required, set Relative.
◎	Speed	Transfer speed to the target position
◎	Position	Target position
○	Acceleration	Parameter which defines how rapidly the actuator reaches the speed set. The higher the set value, the faster it reaches the speed set.
○	Deceleration	Parameter which defines how rapidly the actuator comes to stop. The higher the set value, the quicker it stops.
◎	Pushing force	Set 0. (If values 1 to 100 are set, the operation will be changed to the pushing operation.)
—	Trigger LV	Setting is not required.
—	Pushing speed	Setting is not required.
○	Moving force	Max. torque during the positioning operation (No specific change is required.)
○	Area 1, Area 2	Condition that turns on the AREA output signal.
○	In position	Condition that turns on the INP output signal. When the actuator enters the range of [in position], the INP output signal turns on. (It is unnecessary to change this from the initial value.) When it is necessary to output the arrival signal before the operation is completed, make the value larger.

2. Step data setting for pushing

The actuator moves toward the pushing start position, and when it reaches that position, it starts pushing with the set force or less.
The following diagram shows the setting items and operation.
The setting items and set values for this operation are stated below.

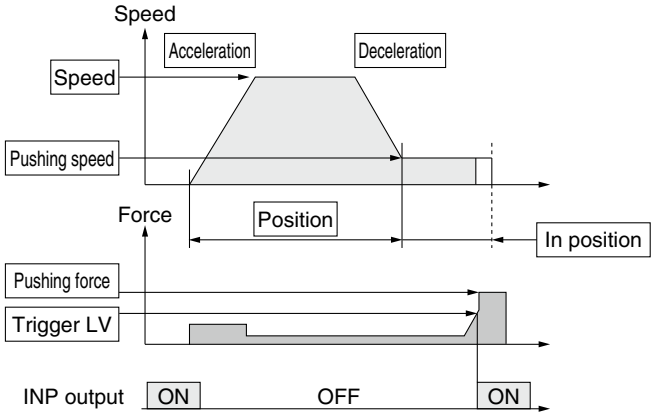

◎: Need to be set.
○: Need to be adjusted as required.

Step Data (Pushing)

Necessity	Item	Details
◎	Movement MOD	When the absolute position is required, set Absolute. When the relative position is required, set Relative.
◎	Speed	Transfer speed to the pushing start position
◎	Position	Pushing start position
○	Acceleration	Parameter which defines how rapidly the actuator reaches the speed set. The higher the set value, the faster it reaches the speed set.
○	Deceleration	Parameter which defines how rapidly the actuator comes to stop. The higher the set value, the quicker it stops.
◎	Pushing force	Pushing force ratio is defined. The setting range differs depending on the electric actuator type. Refer to the operation manual for the electric actuator.
◎	Trigger LV	Condition that turns on the INP output signal. The INP output signal turns on when the generated force exceeds the value. Trigger level should be the pushing force or less.
○	Pushing speed	Pushing speed during pushing. When the speed is set fast, the electric actuator and workpieces might be damaged due to the impact when they hit the end, so this set value should be smaller. Refer to the operation manual for the electric actuator.
○	Moving force	Max. torque during the positioning operation (No specific change is required.)
○	Area 1, Area 2	Condition that turns on the AREA output signal.
◎	In position	Transfer distance during pushing. If the transferred distance exceeds the setting, it stops even if it is not pushing. If the transfer distance is exceeded, the INP output signal will not turn on.

Signal Timing

Return to Origin

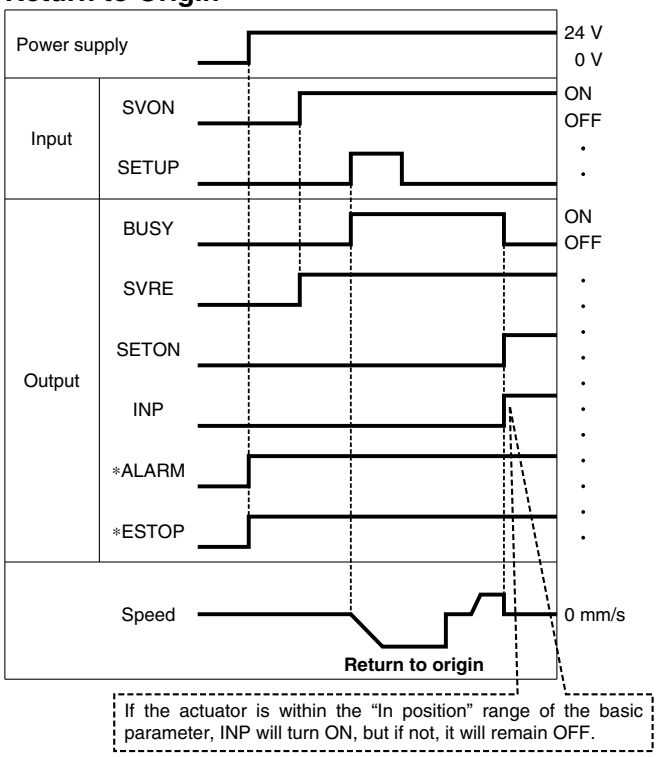

∗ "∗ALARM" and "∗ESTOP" are expressed as negative-logic circuits.

Positioning Operation

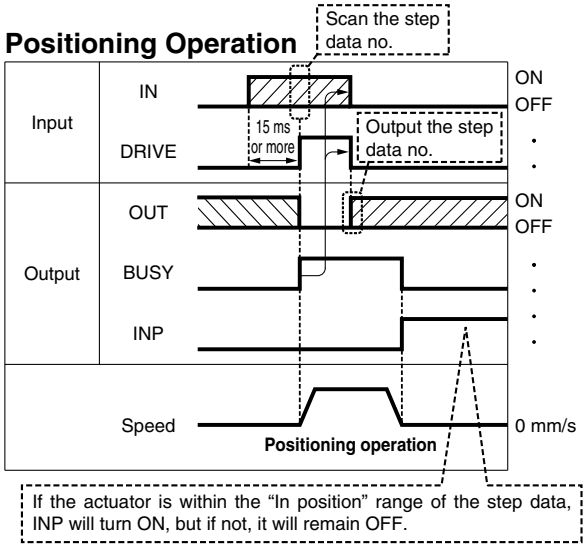

∗ "OUT" is output when "DRIVE" is changed from ON to OFF.
Refer to the operation manual for details on the controller for the LEM series.
(When power supply is applied, "DRIVE" or "RESET" is turned ON or "∗ESTOP" is turned OFF, all of the "OUT" outputs are OFF.)

Pushing Operation

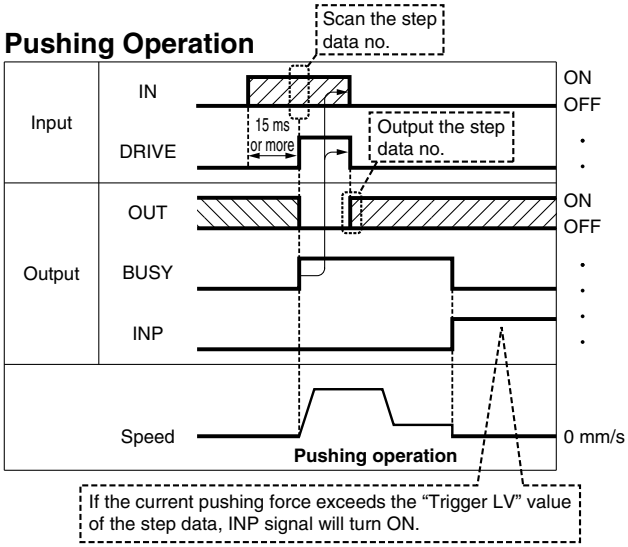

HOLD

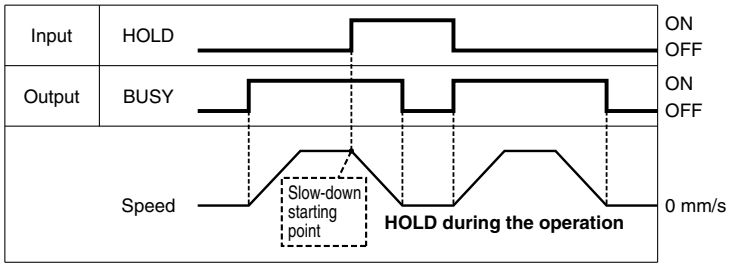

∗ When the actuator is within the "In position" range in the pushing operation, it does not stop even if HOLD signal is input.

Reset

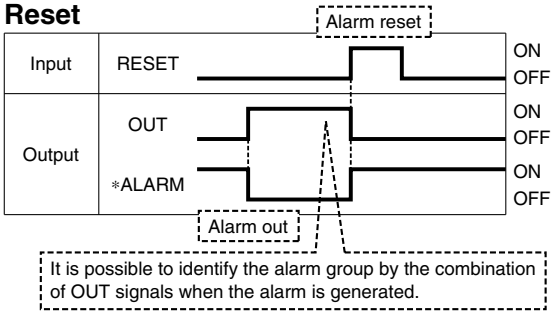

∗ "∗ALARM" is expressed as a negative-logic circuit.

Options

■ Communication cable for controller setting

① **Communication cable JXC-W2A-C**

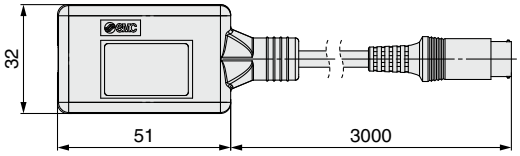

∗ It can be connected to the controller directly.

② **USB cable LEC-W2-U**

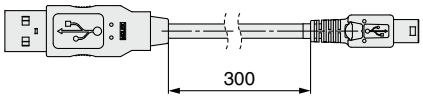

③ **Controller setting kit JXC-W2A**

A set which includes a communication cable (JXC-W2A-C) and a USB cable (LEC-W2-U)

<Controller setting software/USB driver>
- Controller setting software
- USB driver (For JXC-W2A-C)

Download from SMC's website:
https://www.smcworld.com

Hardware Requirements

OS	Windows®7, Windows®8.1, Windows®10
Communication interface	USB 1.1 or USB 2.0 ports
Display	1024 x 768 or more

∗ Windows®7, Windows®8.1, and Windows®10 are registered trademarks of Microsoft Corporation in the United States.

■ Conversion cable P5062-5 (Cable length: 300 mm)

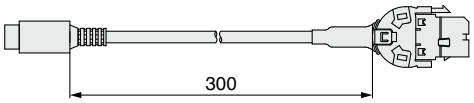

∗ To connect the teaching box (LEC-T1-3□G□) or controller setting kit (LEC-W2□) to the controller, a conversion cable is required.

■ I/O cable

LEC − CN5 − 1

Cable length (L) [m]

1	1.5
3	3
5	5

∗ Conductor size: AWG28

Weight

Product no.	Weight [g]
LEC-CN5-1	170
LEC-CN5-3	320
LEC-CN5-5	520

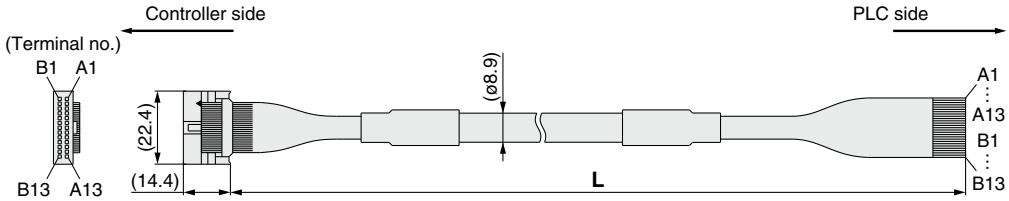

Connector pin no.	Insulation color	Dot mark	Dot color
A1	Light brown	■	Black
A2	Light brown	■	Red
A3	Yellow	■	Black
A4	Yellow	■	Red
A5	Light green	■	Black
A6	Light green	■	Red
A7	Gray	■	Black
A8	Gray	■	Red
A9	White	■	Black
A10	White	■	Red
A11	Light brown	■ ■	Black
A12	Light brown	■ ■	Red
A13	Yellow	■ ■	Black

Connector pin no.	Insulation color	Dot mark	Dot color
B1	Yellow	■ ■	Red
B2	Light green	■ ■	Black
B3	Light green	■ ■	Red
B4	Gray	■ ■	Black
B5	Gray	■ ■	Red
B6	White	■ ■	Black
B7	White	■ ■	Red
B8	Light brown	■ ■ ■	Black
B9	Light brown	■ ■ ■	Red
B10	Yellow	■ ■ ■	Black
B11	Yellow	■ ■ ■	Red
B12	Light green	■ ■ ■	Black
B13	Light green	■ ■ ■	Red
—	Shield		

■ Power supply plug JXC-CPW

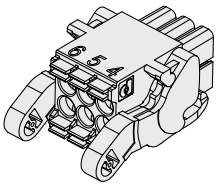

∗ The power supply plug is an accessory.
<Applicable cable size> AWG20 (0.5 mm²), cover diameter 2.0 mm or less

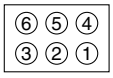

① C24V ④ 0V
② M24V ⑤ N.C.
③ EMG ⑥ LK RLS

Power supply plug

Terminal name	Function	Details
0V	Common supply (–)	The M24V terminal, C24V terminal, EMG terminal, and LK RLS terminal are common (–).
M24V	Motor power supply (+)	Motor power supply (+) of the controller
C24V	Control power supply (+)	Control power supply (+) of the controller
EMG	Stop (+)	Connection terminal of the external stop circuit
LK RLS	Lock release (+)	Connection terminal of the lock release switch

■ Teaching box

LEC − T1 − 3 J G □

Enable switch (Option)

Stop switch

Teaching box

Cable length [m]

3	3

Initial language

J	Japanese
E	English

∗ The displayed language can be changed to English or Japanese.

Enable switch

Nil	None
S	Equipped with enable switch

∗ Interlock switch for jog and test function

Stop switch

G	Equipped with stop switch

Specifications

Item	Description
Switch	Stop switch, Enable switch (Option)
Cable length [m]	3
Enclosure	IP64 (Except connector)
Operating temperature range [°C]	5 to 50
Operating humidity range [%RH]	90 or less (No condensation)
Weight [g]	350 (Except cable)

High Performance Step Motor Controller

JXCEH/9H/PH Series

For details, refer to page 49.

RoHS

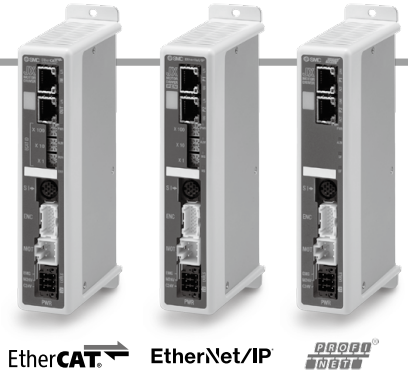

How to Order

JXC P H 7 – □

❶ ❷ ❸ ❹

❶ Communication protocol

E	EtherCAT
9	EtherNet/IP™
P	PROFINET

❷ Specifications

H	1 axis/High performance type

❸ Mounting

7	Screw mounting
8∗1	DIN rail

∗1 The DIN rail is not included. It must be ordered separately. (Refer to page 45.)

❹ Actuator part number

Without cable specifications and actuator options Example: Enter "**LEY25GA-100**" for the LEY25GA-100B-R1□.	
BC	Blank controller∗1

∗1 Requires dedicated software (JXC-BCW)

∗ Configuration of the ACT Controller 2 is possible using Windows 10 and 11.
With Windows 7 and 8, the configuration is by means of dedicated software (JXC-BCW).

The controller is sold as single unit after the compatible actuator is set.

Confirm that the combination of the controller and actuator is correct.

① Check the actuator label for the model number. This number should match that of the controller.

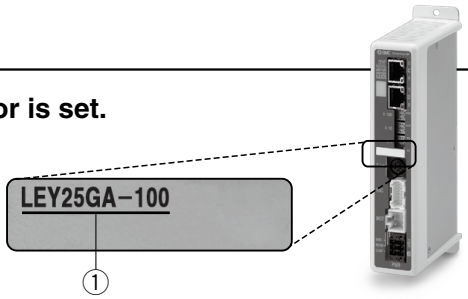

∗ Refer to the operation manual for using the products. Please download it via our website: https://www.smcworld.com

Precautions for blank controllers (JXC□H□-BC)

A blank controller is a controller to which the customer can write the data of the actuator it is to be combined and used with. For data writing, use the controller setting software ACT Controller 2 or the dedicated software JXC-BCW.

- Both ACT Controller 2 and JXC-BCW can be downloaded from the SMC website.
- To use this software, order the communication cable for controller setting (JXC-W2A-C) and the USB cable (LEC-W2-U) separately.

Hardware Requirements

OS	Windows®10 (64 bit)	Windows®7	Windows®8	Windows®10
Software	ACT Controller 2 (With JXC-BCW function)	JXC-BCW		

∗ Windows®7, Windows®8, and Windows®10 are registered trademarks of Microsoft Corporation in the United States.

SMC website: https://www.smcworld.com

⚠Caution

[CE-compliant products]

① EMC compliance was tested by combining the electric actuator LE series and the JXCEH/PH series. The EMC depends on the configuration of the customer's control panel and the relationship with other electrical equipment and wiring. Therefore, compliance with the EMC directive cannot be certified for SMC components incorporated into the customer's equipment under actual operating conditions. As a result, it is necessary for the customer to verify compliance with the EMC directive for the machinery and equipment as a whole.

② For the JXCEH/PH series (step motor controller), EMC compliance was tested by installing a noise filter set (LEC-NFA).
Refer to page 46 for the noise filter set. Refer to the JXCEH/PH Operation Manual for installation.

Specifications

Model			JXCEH	JXC9H	JXCPH
Network			EtherCAT	EtherNet/IP™	PROFINET
Compatible motor			Step motor (Servo/24 VDC)		
Power supply			Power voltage: 24 VDC ±10%		
Current consumption (Controller)			200 mA or less	200 mA or less	200 mA or less
Compatible encoder			Battery-less absolute encoder		
Communication specifications	Applicable system	Protocol	EtherCAT*2	EtherNet/IP™*2	PROFINET*2
		Version*1	Conformance Test Record V.1.2.6	Volume 1 (Edition 3.14) Volume 2 (Edition 1.15)	Specification Version 2.32
	Communication speed		100 Mbps*2	10/100 Mbps*2 (Automatic negotiation)	100 Mbps*2
	Configuration file*3		ESI file	EDS file	GSDML file
	I/O occupation area		Input 20 bytes Output 36 bytes	Input 36 bytes Output 36 bytes	Input 36 bytes Output 36 bytes
	Terminating resistor		Not included		
Memory			EEPROM		
LED indicator			PWR, RUN, ALM, ERR	PWR, ALM, MS, NS	PWR, ALM, SF, BF
Cable length [m]			Actuator cable: 20 or less		
Cooling system			Natural air cooling		
Operating temperature range [°C]			0 to 40 (No freezing)*4		
Operating humidity range [%RH]			90 or less (No condensation)		
Insulation resistance [MΩ]			Between all external terminals and the case: 50 (500 VDC)		
Weight [g]			260 (Screw mounting) 280 (DIN rail mounting)	250 (Screw mounting) 270 (DIN rail mounting)	260 (Screw mounting) 280 (DIN rail mounting)

*1 Please note that versions are subject to change.
*2 Use a shielded communication cable with CAT5 or higher for the PROFINET, EtherNet/IP™, and EtherCAT.
*3 The files can be downloaded from the SMC website.
*4 The operating temperature range for both controller version 1 products and controller version 2 products is 0 to 40°C. Refer to the **Web Catalog** for details on identifying controller version symbols

■Trademark
EtherNet/IP® is a registered trademark of ODVA, Inc.
EtherCAT® is registered trademark and patented technology, licensed by Beckhoff Automation GmbH, Germany.

Example of Operation Command

In addition to the step data input of 64 points maximum in each communication protocol, the changing of each parameter can be performed in real time via numerical data defined operation.
* Numerical values other than “Moving force,” “Area 1,” and “Area 2” can be used to perform operation under numerical instructions from JXCL1.

<Application example> Movement between 2 points

No.	Movement mode	Speed	Position	Acceleration	Deceleration	Pushing force	Trigger LV	Pushing speed	Moving force	Area 1	Area 2	In position
0	1: Absolute	100	10	3000	3000	0	0	0	100	0	0	0.50
1	1: Absolute	100	100	3000	3000	0	0	0	100	0	0	0.50

<Step no. defined operation>
Sequence 1: Servo ON instruction
Sequence 2: Instruction to return to origin
Sequence 3: Specify step data No. 0 to input the DRIVE signal.
Sequence 4: Specify step data No. 1 after the DRIVE signal has been temporarily turned OFF to input the DRIVE signal.

<Numerical data defined operation>
Sequence 1: Servo ON instruction
Sequence 2: Instruction to return to origin
Sequence 3: Specify step data No. 0 and turn ON the input instruction flag (position). Input 10 in the target position. Subsequently the start flag turns ON.
Sequence 4: Turn ON step data No. 0 and the input instruction flag (position) to change the target position to 100 while the start flag is ON.

The same operation can be performed with any operation command.

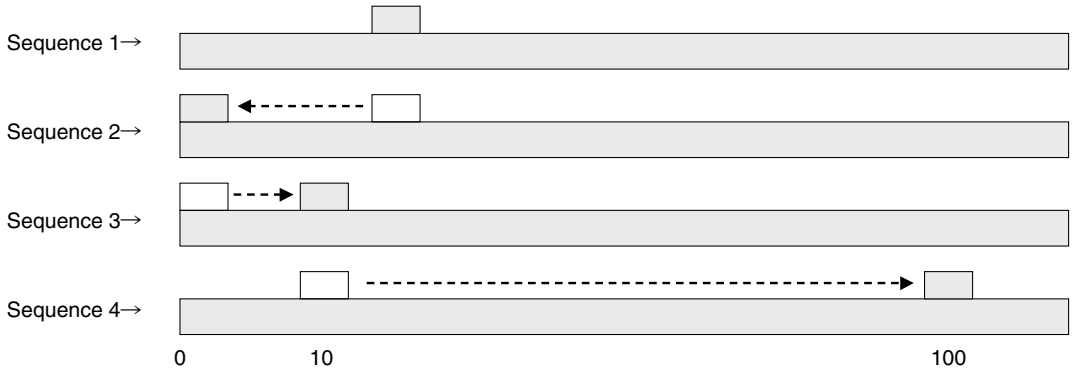

Dimensions

JXCEH

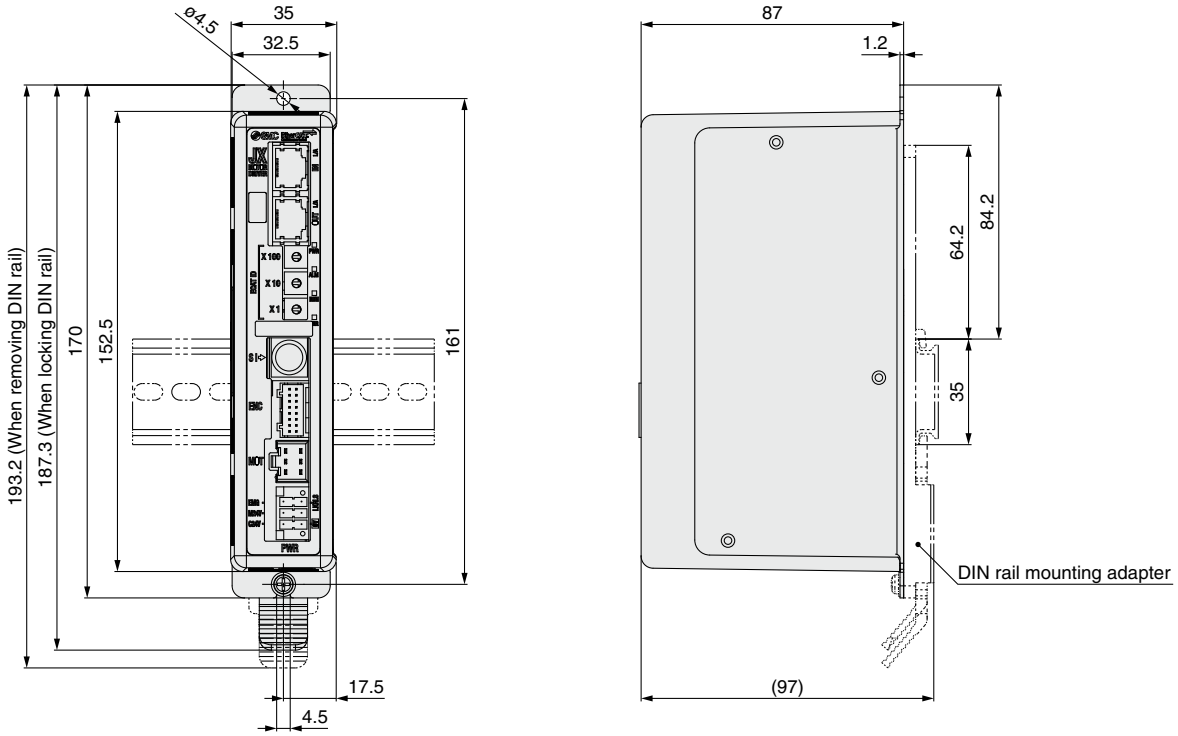

JXC9H

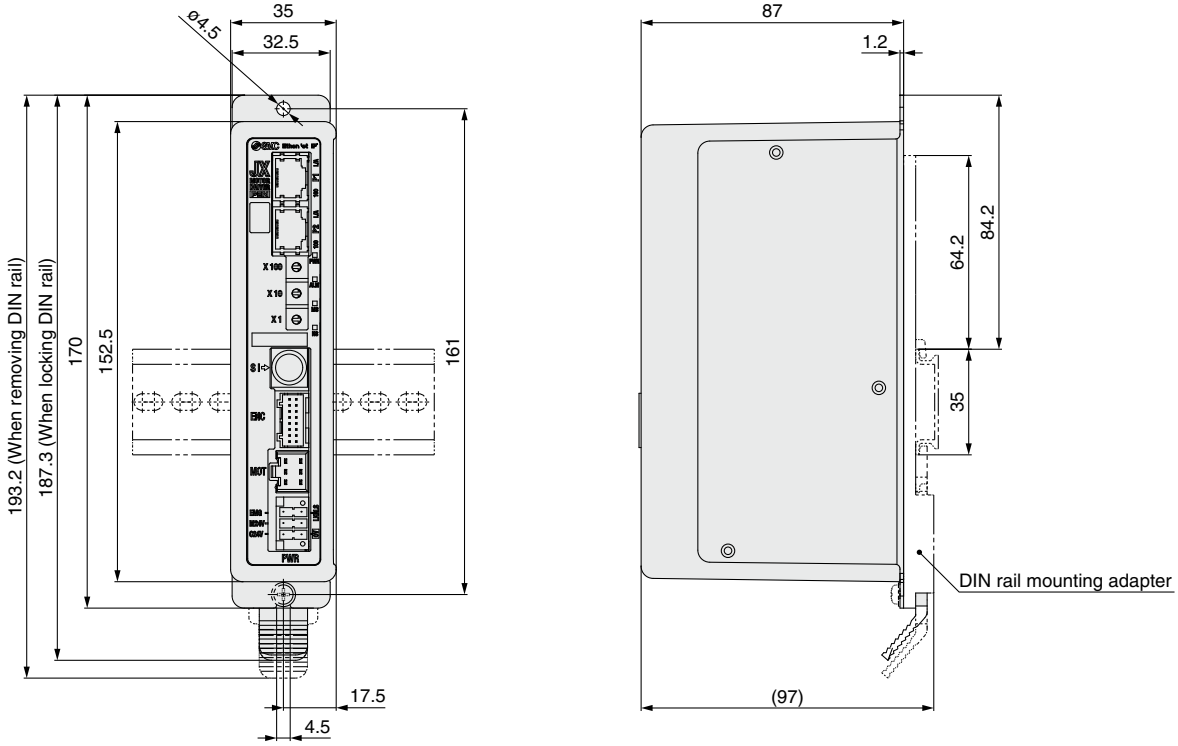

Dimensions

JXCPH

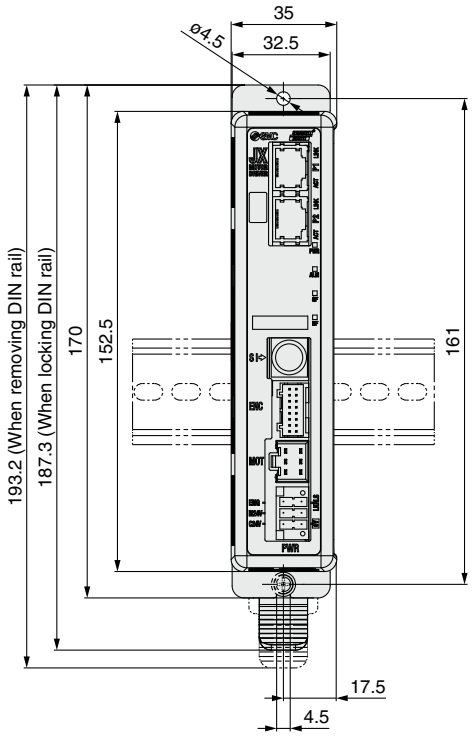

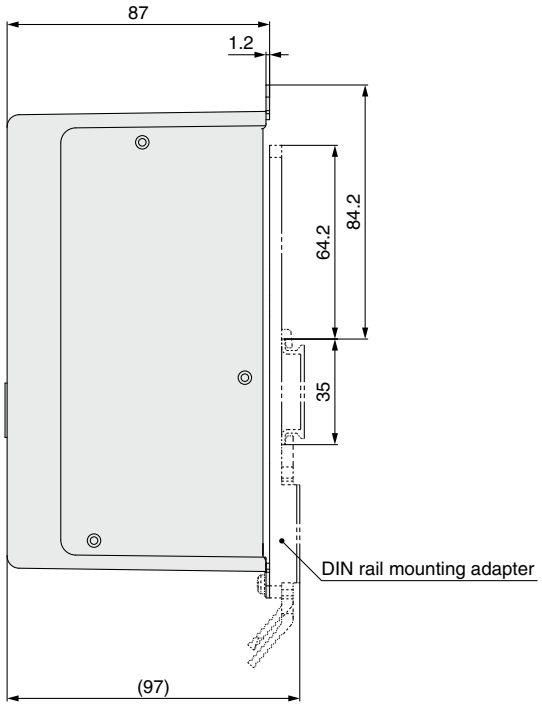

DIN rail
AXT100-DR-□

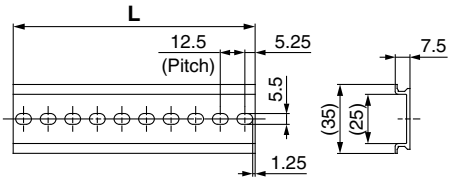

∗ For □, enter a number from the No. line in the table below.
Refer to the dimension drawings on pages 44 and 45 for the mounting dimensions.

L Dimensions [mm]

No.	1	2	3	4	5	6	7	8	9	10	11	12	13	14	15	16	17	18	19	20
L	23	35.5	48	60.5	73	85.5	98	110.5	123	135.5	148	160.5	173	185.5	198	210.5	223	235.5	248	260.5

No.	21	22	23	24	25	26	27	28	29	30	31	32	33	34	35	36	37	38	39	40
L	273	285.5	298	310.5	323	335.5	348	360.5	373	385.5	398	410.5	423	435.5	448	460.5	473	485.5	498	510.5

DIN rail mounting adapter
LEC-3-D0 (with 2 mounting screws)

This should be used when the DIN rail mounting adapter is mounted onto a screw mounting type controller afterward.

Options

■ Communication cable for controller setting

① **Communication cable JXC-W2A-C**

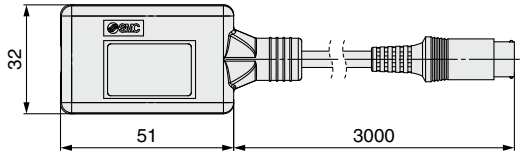

∗ It can be connected to the controller directly.

② **USB cable LEC-W2-U**

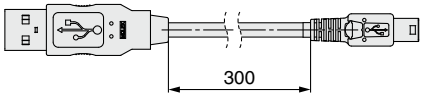

③ **Controller setting kit JXC-W2A**

A set which includes a communication cable (JXC-W2A-C) and a USB cable (LEC-W2-U)

<Controller setting software/USB driver>
· Controller setting software
· USB driver (For JXC-W2A-C)
Download from SMC's website: https://www.smcworld.com

Hardware Requirements

OS	Windows®7, Windows®8.1, Windows®10
Communication interface	USB 1.1 or USB 2.0 ports
Display	1024 x 768 or more

∗ Windows®7, Windows®8.1 and Windows®10 are registered trademarks of Microsoft Corporation in the United States.

■ DIN rail mounting adapter LEC-3-D0

∗ With 2 mounting screws

This should be used when the DIN rail mounting adapter is mounted onto a screw mounting type controller afterward.

■ DIN rail AXT100-DR-□

∗ For □, enter a number from the No. line in the table on page 45. Refer to the dimension drawings on pages 44 and 45 for the mounting dimensions.

■ Teaching box

LEC − T1 − 3 J G □

Teaching box

Cable length [m]

3	3

Initial language

J	Japanese
E	English

∗ The displayed language can be changed to English or Japanese.

Stop switch

G	Equipped with stop switch

Enable switch

Nil	None
S	Equipped with enable switch

∗ Interlock switch for jog and test function

Specifications

Item	Description
Switch	Stop switch, Enable switch (Option)
Cable length [m]	3
Enclosure	IP64 (Except connector)
Operating temperature range [°C]	5 to 50
Operating humidity range [%RH]	90 or less (No condensation)
Weight [g]	350 (Except cable)

■ Power supply plug JXC-CPW

∗ The power supply plug is an accessory.

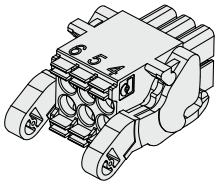

⑥ ⑤ ④	① C24V ④ 0V
③ ② ①	② M24V ⑤ N.C.
	③ EMG ⑥ LK RLS

Power supply plug

Terminal name	Function	Details
0V	Common supply (−)	The M24V terminal, C24V terminal, EMG terminal, and LK RLS terminal are common (−).
M24V	Motor power supply (+)	Motor power supply (+) of the controller
C24V	Control power supply (+)	Control power supply (+) of the controller
EMG	Stop (+)	Connection terminal of the external stop circuit
LK RLS	Lock release (+)	Connection terminal of the lock release switch

■ Conversion cable P5062-5 (Cable length: 300 mm)

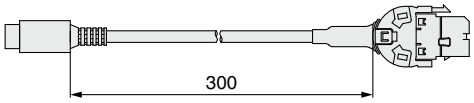

∗ To connect the teaching box (LEC-T1-3□G□) or controller setting kit (LEC-W2) to the controller, a conversion cable is required.

■ Noise filter set

LEC − NFA

Contents of the set: 2 noise filters
(Manufactured by WURTH ELEKTRONIK: 74271222)

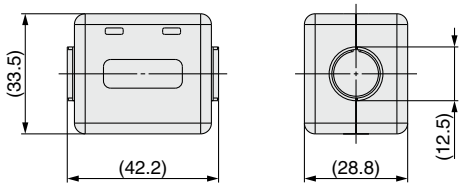

∗ Refer to the JXCEH/PH series Operation Manual for installation.

Actuator Cable (Option)

[Robotic cable for battery-less absolute (Step motor 24 VDC)]

LE − CE − 1

Cable length (L) [m]

1	1.5
3	3
5	5
8	8*1
A	10*1
B	15*1
C	20*1

*1 Produced upon receipt of order

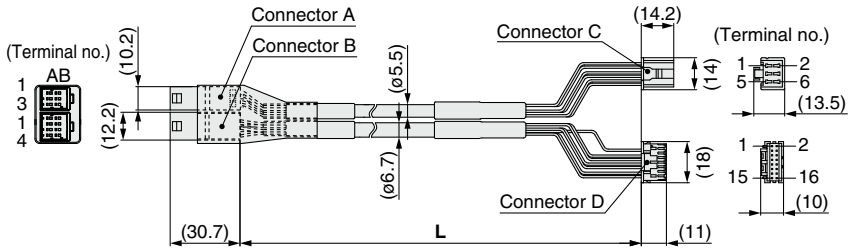

Weight

Product no.	Weight [g]	Note
LE-CE-1	190	Robotic cable
LE-CE-3	360	
LE-CE-5	570	
LE-CE-8	900	
LE-CE-A	1120	
LE-CE-B	1680	
LE-CE-C	2210	

Signal	Connector A terminal no.	Cable color	Connector C terminal no.
A	B-1	Brown	2
$\overline{A}$	A-1	Red	1
B	B-2	Orange	6
$\overline{B}$	A-2	Yellow	5
COM-A/COM	B-3	Green	3
COM-B/—	A-3	Blue	4

Shield

Signal	Connector B terminal no.	Cable color	Connector D terminal no.
Vcc	B-1	Brown	12
GND	A-1	Black	13
$\overline{A}$	B-2	Red	7
A	A-2	Black	6
$\overline{B}$	B-3	Orange	9
B	A-3	Black	8
SD+ (RX)	B-4	Yellow	11
SD− (TX)	A-4	Black	10
		Black	3

[Robotic cable with lock for battery-less absolute (Step motor 24 VDC)]

LE − CE − 1 − B

Cable length (L) [m]

1	1.5
3	3
5	5
8	8*1
A	10*1
B	15*1
C	20*1

*1 Produced upon receipt of order

With lock and sensor

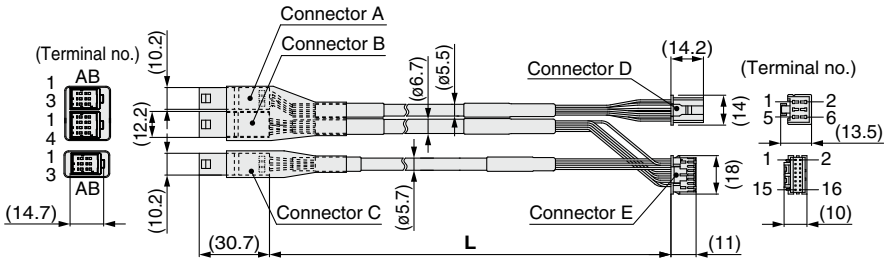

Weight

Product no.	Weight [g]	Note
LE-CE-1-B	240	Robotic cable
LE-CE-3-B	460	
LE-CE-5-B	740	
LE-CE-8-B	1170	
LE-CE-A-B	1460	
LE-CE-B-B	2120	
LE-CE-C-B	2890	

Signal	Connector A terminal no.	Cable color	Connector D terminal no.
A	B-1	Brown	2
$\overline{A}$	A-1	Red	1
B	B-2	Orange	6
$\overline{B}$	A-2	Yellow	5
COM-A/COM	B-3	Green	3
COM-B/—	A-3	Blue	4

Shield

Signal	Connector B terminal no.	Cable color	Connector E terminal no.
Vcc	B-1	Brown	12
GND	A-1	Black	13
$\overline{A}$	B-2	Red	7
A	A-2	Black	6
$\overline{B}$	B-3	Orange	9
B	A-3	Black	8
SD+ (RX)	B-4	Yellow	11
SD− (TX)	A-4	Black	10
		Black	3

Signal	Connector C terminal no.		
Lock (+)	B-1	Red	4
Lock (−)	A-1	Black	5
Sensor (+)	B-3	Brown	1
Sensor (−)	A-3	Blue	2

LEY/LEYG Series
Battery-less Absolute Encoder Type Specific Product Precautions

Be sure to read this before handling the products. Refer to the back cover for safety instructions. For electric actuator precautions, refer to the "Handling Precautions for SMC Products" and the "Operation Manual" on the SMC website: https://www.smcworld.com

Handling

⚠ Caution

1. Absolute encoder ID mismatch error at the first connection

In the following cases, an "ID mismatch error" alarm occurs after the power is turned ON. Perform a return to origin operation after resetting the alarm before use.

- When an electric actuator is connected and the power is turned ON for the first time after purchase*1
- When the actuator or motor is replaced
- When the controller is replaced

*1 If you have purchased an electric actuator and controller with the set part number, the pairing may have already been completed and the alarm may not be generated.

"ID mismatch error"

Operation is enabled by matching the encoder ID on the electric actuator side with the ID registered in the controller. This alarm occurs when the encoder ID is different from the registered contents of the controller. By resetting this alarm, the encoder ID is registered (paired) to the controller again.

When a controller is changed after pairing is completed				
	Encoder ID no. (* Numbers below are examples.)			
Actuator	17623	17623	17623	17623
Controller	17623	17699	17699	17623
ID mismatch error occurred?	No	Yes	Error reset ⇒ No	

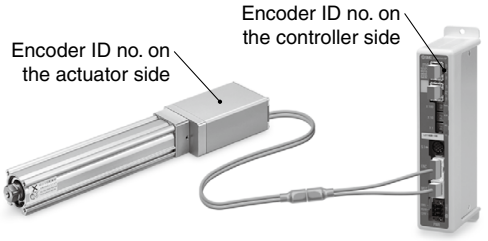

The ID number is automatically checked when the control power supply is turned ON.
An error is output if the ID number does not match.

2. In environments where strong magnetic fields are present, use may be limited.

A magnetic sensor is used in the encoder. Therefore, if the actuator motor is used in an environment where strong magnetic fields are present, malfunction or failure may occur.
Do not expose the actuator motor to magnetic fields with a magnetic flux density of 1 mT or more.
When installing an electric actuator and an air cylinder with an auto switch (ex. CDQ2 series) or multiple electric actuators side by side, maintain a space of 40 mm or more around the motor. Refer to the construction drawing of the actuator motor.

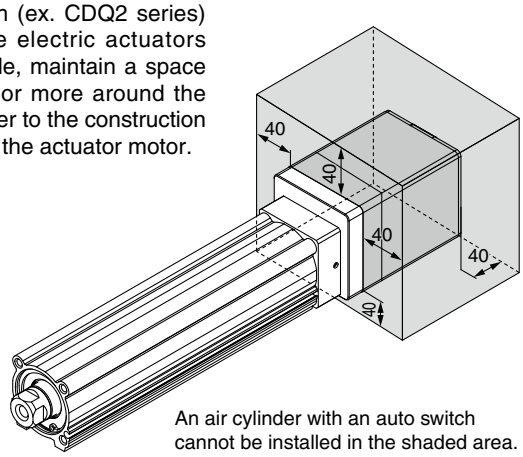

An air cylinder with an auto switch cannot be installed in the shaded area.

- **When lining up actuators**

SMC actuators can be used with their motors adjacent to each other. However, for actuators with a built-in auto switch magnet, maintain a space of 40 mm or more between the motors and the position where the magnet passes.
For the LEY series, the magnet is in the piston portion. (Refer to the construction drawings in the catalog for details.)

○ Can be used with their motors adjacent to each other

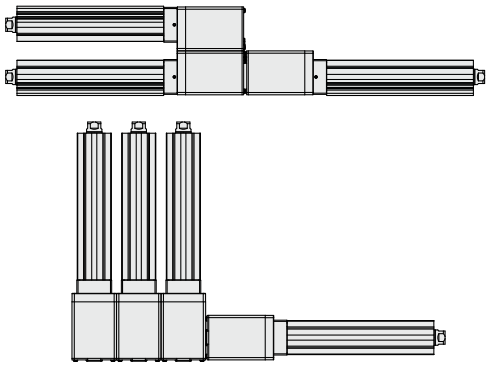

✕ Do not allow the motors to be in close proximity to the position where the magnet passes.

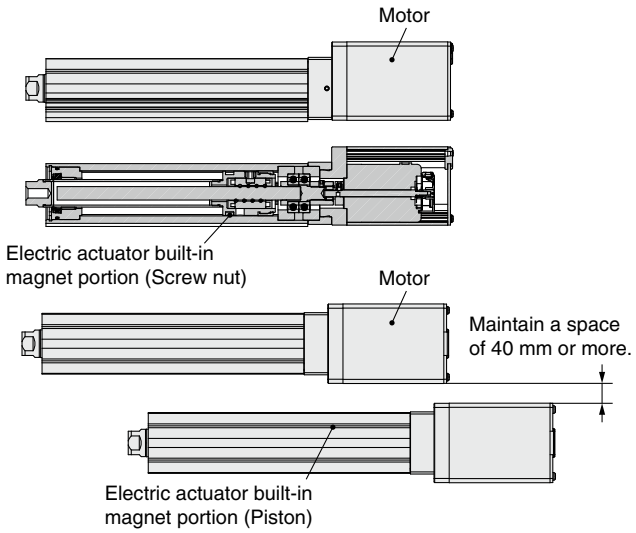

3. The connector size of the motor cable is different from that of the electric actuator with an incremental encoder.

The motor cable connector of an electric actuator with a battery-less absolute encoder is different from that of an electric actuator with an incremental encoder. As the connector cover dimensions are different, take the dimensions below into consideration during the design process.

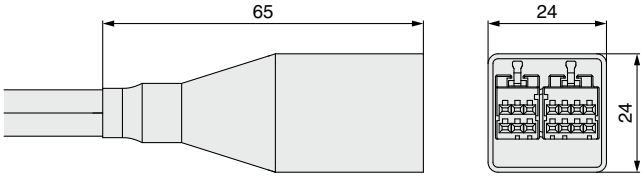

Battery-less absolute encoder connector cover dimensions

CE/UKCA/UL-compliance List

∗ For CE, UKCA, and UL-compliant products, refer to the tables below.

As of February 2022

■ Controllers "○": Compliant "×": Not compliant

Compatible motor	Series	CE UKCA	cULus	
			Compliance	Certification No. (File No.)
High performance (Step motor 24 VDC)	**JXC5H/6H**	○	○	E480340
	JXCEH	○	○	E480340
	JXC9H	○	○	E480340
	JXCPH	○	○	E480340

■ Actuators "○": Compliant "×": Not compliant

Compatible motor	Series	CE UKCA	cULus	
			Compliance	Certification No. (File No.)
High performance battery-less absolute (Step motor 24 VDC)	**LEY□G**	○	×	—

■ Actuators (When ordered with a controller) "○": Compliant "×": Not compliant "—": Not applicable

Compatible motor	Series	JXC5H/6H			JXCEH			JXC9H			JXCPH		
		CE UKCA	cULus		CE UKCA	cULus		CE UKCA	cULus		CE UKCA	cULus	
			Compliance	Certification No. (File No.)		Compliance	Certification No. (File No.)		Compliance	Certification No. (File No.)		Compliance	Certification No. (File No.)
High performance battery-less absolute (Step motor 24 VDC)	**LEY□G**	○	×	—	○	×	—	○	×	—	○	×	—

⚠ Safety Instructions

These safety instructions are intended to prevent hazardous situations and/or equipment damage. These instructions indicate the level of potential hazard with the labels of **"Caution," "Warning"** or **"Danger."** They are all important notes for safety and must be followed in addition to International Standards (ISO/IEC)*1), and other safety regulations.

⚠ Caution: **Caution** indicates a hazard with a low level of risk which, if not avoided, could result in minor or moderate injury.

⚠ Warning: **Warning** indicates a hazard with a medium level of risk which, if not avoided, could result in death or serious injury.

⚠ Danger : **Danger** indicates a hazard with a high level of risk which, if not avoided, will result in death or serious injury.

*1) ISO 4414: Pneumatic fluid power – General rules relating to systems.
ISO 4413: Hydraulic fluid power – General rules relating to systems.
IEC 60204-1: Safety of machinery – Electrical equipment of machines. (Part 1: General requirements)
ISO 10218-1: Manipulating industrial robots – Safety.
etc.

⚠ Warning

1. The compatibility of the product is the responsibility of the person who designs the equipment or decides its specifications.

Since the product specified here is used under various operating conditions, its compatibility with specific equipment must be decided by the person who designs the equipment or decides its specifications based on necessary analysis and test results. The expected performance and safety assurance of the equipment will be the responsibility of the person who has determined its compatibility with the product. This person should also continuously review all specifications of the product referring to its latest catalog information, with a view to giving due consideration to any possibility of equipment failure when configuring the equipment.

2. Only personnel with appropriate training should operate machinery and equipment.

The product specified here may become unsafe if handled incorrectly. The assembly, operation and maintenance of machines or equipment including our products must be performed by an operator who is appropriately trained and experienced.

3. Do not service or attempt to remove product and machinery/equipment until safety is confirmed.

1. The inspection and maintenance of machinery/equipment should only be performed after measures to prevent falling or runaway of the driven objects have been confirmed.
2. When the product is to be removed, confirm that the safety measures as mentioned above are implemented and the power from any appropriate source is cut, and read and understand the specific product precautions of all relevant products carefully.
3. Before machinery/equipment is restarted, take measures to prevent unexpected operation and malfunction.

4. Contact SMC beforehand and take special consideration of safety measures if the product is to be used in any of the following conditions.

1. Conditions and environments outside of the given specifications, or use outdoors or in a place exposed to direct sunlight.
2. Installation on equipment in conjunction with atomic energy, railways, air navigation, space, shipping, vehicles, military, medical treatment, combustion and recreation, or equipment in contact with food and beverages, emergency stop circuits, clutch and brake circuits in press applications, safety equipment or other applications unsuitable for the standard specifications described in the product catalog.
3. An application which could have negative effects on people, property, or animals requiring special safety analysis.
4. Use in an interlock circuit, which requires the provision of double interlock for possible failure by using a mechanical protective function, and periodical checks to confirm proper operation.

⚠ Caution

1. The product is provided for use in manufacturing industries.

The product herein described is basically provided for peaceful use in manufacturing industries.
If considering using the product in other industries, consult SMC beforehand and exchange specifications or a contract if necessary.
If anything is unclear, contact your nearest sales branch.

Limited warranty and Disclaimer/ Compliance Requirements

The product used is subject to the following "Limited warranty and Disclaimer" and "Compliance Requirements".
Read and accept them before using the product.

Limited warranty and Disclaimer

1. The warranty period of the product is 1 year in service or 1.5 years after the product is delivered, whichever is first.*2)
   Also, the product may have specified durability, running distance or replacement parts. Please consult your nearest sales branch.
2. For any failure or damage reported within the warranty period which is clearly our responsibility, a replacement product or necessary parts will be provided.
   This limited warranty applies only to our product independently, and not to any other damage incurred due to the failure of the product.
3. Prior to using SMC products, please read and understand the warranty terms and disclaimers noted in the specified catalog for the particular products.

***2) Vacuum pads are excluded from this 1 year warranty.**
A vacuum pad is a consumable part, so it is warranted for a year after it is delivered.
Also, even within the warranty period, the wear of a product due to the use of the vacuum pad or failure due to the deterioration of rubber material are not covered by the limited warranty.

Compliance Requirements

1. The use of SMC products with production equipment for the manufacture of weapons of mass destruction (WMD) or any other weapon is strictly prohibited.
2. The exports of SMC products or technology from one country to another are governed by the relevant security laws and regulations of the countries involved in the transaction. Prior to the shipment of a SMC product to another country, assure that all local rules governing that export are known and followed.

⚠ Caution

SMC products are not intended for use as instruments for legal metrology.

Measurement instruments that SMC manufactures or sells have not been qualified by type approval tests relevant to the metrology (measurement) laws of each country. Therefore, SMC products cannot be used for business or certification ordained by the metrology (measurement) laws of each country.

⚠ Safety Instructions	Be sure to read the "Handling Precautions for SMC Products" (M-E03-3) and "Operation Manual" before use.

SMC Corporation
Akihabara UDX 15F,
4-14-1, Sotokanda, Chiyoda-ku, Tokyo 101-0021, JAPAN
Phone: 03-5207-8249 Fax: 03-5298-5362
https://www.smcworld.com
© 2022 SMC Corporation All Rights Reserved

Specifications are subject to change without prior notice
and any obligation on the part of the manufacturer.