Vacuum pad/Compatible with Metal Detectors

New

RoHS

4.5-Stage Bellows Type Ø 40

Bellows type pad with excellent cushioning and flexibility
Reduces the deformation of soft workpieces such as bread

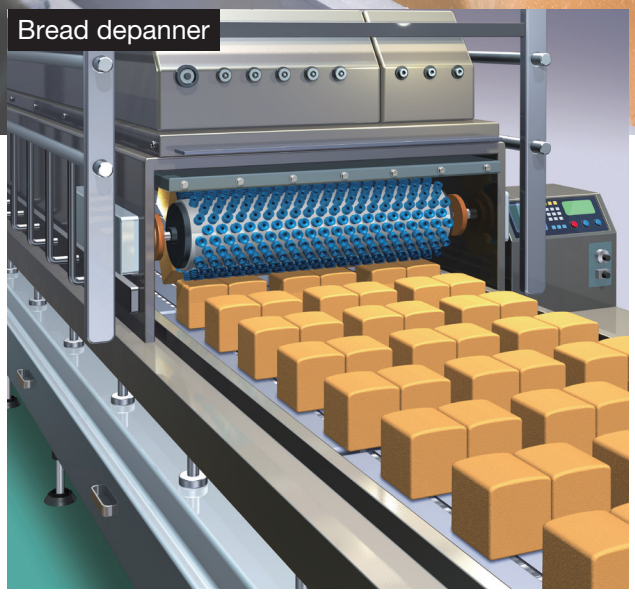
Bread depanner

Equipment for the Food Manufacturing Industry

HF3A- Series

- Uses materials that comply with food contact surface laws and regulations and does not use lubricants or rust proof agents

The pads and retainers are made of materials compliant with the FDA (U.S. Food and Drug Administration) dissolution test, Regulation (EC) No. 1935/2004, and Japan Food Sanitation Act standards.

Improved durability due to anti-stick grooves

Variations

Mounting		Connection
Retainer		Retainer
Vertical adapter		G3/8, G1/2 (Male thread)

＊ Please use the product in accordance with the specifications provided in the catalogues/operation manuals.
It is your responsibility to check the suitability for your workpiece and equipment.

HF3A-ZP3F Series

SMC

CAT.EUS100-174A-UK

Made from a metal compound material Compatible with contamination inspections p. 2

The retainer can be directly inserted into the mounting holes of a resin belt, etc. p. 6

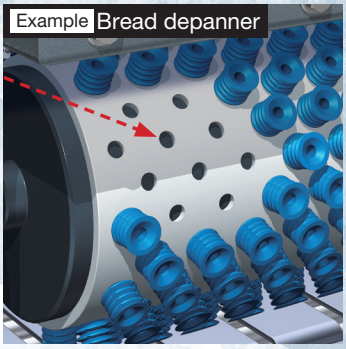

Excellent cushioning

The light pressing force allows for workpieces to be suctioned without being crushed.

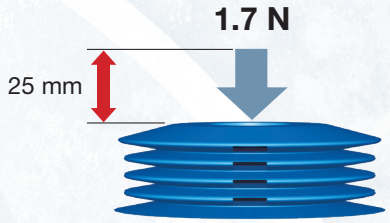

Rubber hardness (Shore A: ±5°): 40

Anti-stick grooves/Improved durability

The anti-stick grooves on the circumference prevent the bellows from sticking during suction. This reduces returning failure after the workpiece is released.

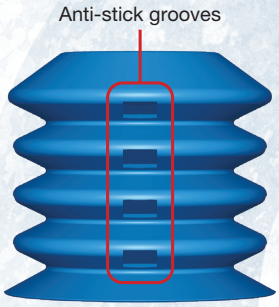

Equipment for the Food Manufacturing Industry

Lineup of equipment for various food production processes
Designed to help in meeting HACCP, PRP, and other standards, Applicable for a diverse range of food manufacturing processes,
Possible to blow directly onto food

Equipment for the Food Manufacturing Industry

Bread Manufacturing Process

CONTENTS

How to Order ····· p. 2
Specifications ····· p. 2
Dimensions/Models ····· p. 3
Construction ····· p. 4
Mounting Parts ····· p. 5
Specific Product Precautions ····· p. 6

Vacuum pad/Compatible with Metal Detectors

HF3A-ZP3F Series

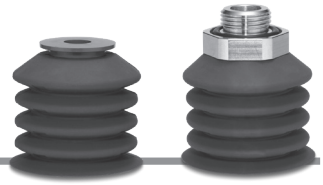

How to Order

Pad unit	**HF3A-ZP3F - 40ZJMS**
With retainer	**HF3A-ZP3F - D40ZJMS**
With adapter	**HF3A-ZP3FS - T40ZJMS - AG03**

❶ ❷ ❸ ❹ ❺ ❻

❶ Adapter material

Symbol	Material
S	Stainless steel

❷ Mounting

Symbol	Mounting
D	Retainer
T	Vertical adapter

❸ Pad diameter

Symbol	Pad diameter
40	Ø 40

❹ Pad form

Symbol	Form
ZJ	Bellows type (4.5-stage)

❺ Pad material

Symbol	Material	Colour
MS∗1, ∗2	Silicone rubber (Compatible with metal detectors)	Blue

❻ Connection thread

Symbol	Type	Size
AG03	Male thread	G3/8
AG04		G1/2

∗1 Uses a material compliant with a dissolution test of the FDA (USA Food and Drug Administration) regulation 21CFR§177.2600 for "Rubber articles intended for repeated use."
∗2 Compliant with Regulation (EC) No. 1935/2004 (regulation on materials and articles intended to come into contact with food)

Specifications

Pad	Material	Silicone rubber (Compatible with metal detectors)	
	Colour of rubber	Blue	
	Rubber hardness (Shore A: ±5°)	40	
	Operating temperature range	-40 to 200 °C	
Retainer	Material	Synthetic resin (Compatible with metal detectors)	
	Operating temperature range	-40 to 90 °C	
Adapter	Material	Stainless steel	
	Connection thread	Male thread	G3/8
			G1/2

Detection Sensitivity (Correlation between rubber pieces and ferrous balls)

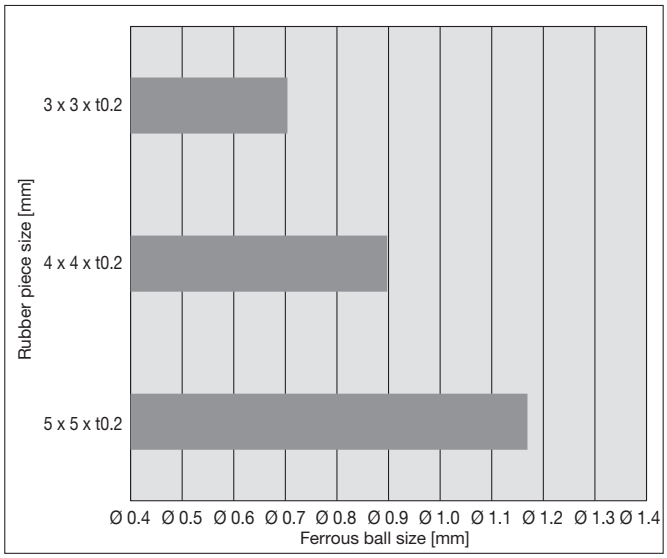

Dimensions/Models

With retainer

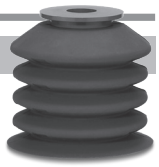

HF3A - ZP3F - D 40 ZJ MS
❶ ❷ ❸ ❹

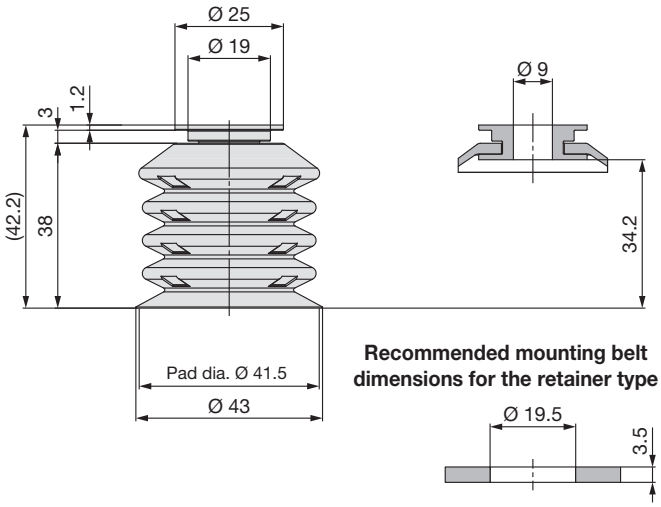

	Model				Weight [g]
	❶ Mounting	❷ Pad diameter	❸ Pad form	❹ Pad material*1	
HF3A-ZP3F	**D**	**40**	**ZJ**	**MS**	15.2

*1 MS: Silicone rubber (Compatible with metal detectors)

With adapter

HF3A - ZP3F S - T 40 ZJ MS - AG03
❶ ❷ ❸ ❹ ❺

❻ **Connection thread**

AG03	G3/8
AG04	G1/2

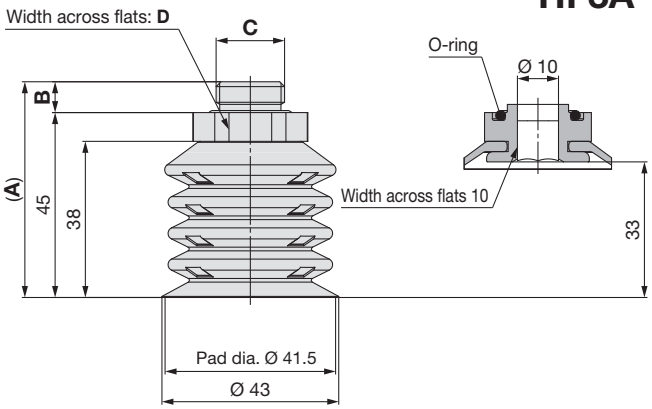

	Model						A	B	C	D	Weight [g]
	❶ Adapter material	❷ Mounting	❸ Pad diameter	❹ Pad form	❺ Pad material*1	❻ Connection thread					
HF3A-ZP3F	**S**	**T**	**40**	**ZJ**	**MS**	**AG03**	52.5	7.5	G3/8	26	53.7
						AG04	54	9	G1/2	30	72.7

*1 MS: Silicone rubber (Compatible with metal detectors)

Construction

With retainer **HF3A-ZP3F-D40ZJMS**

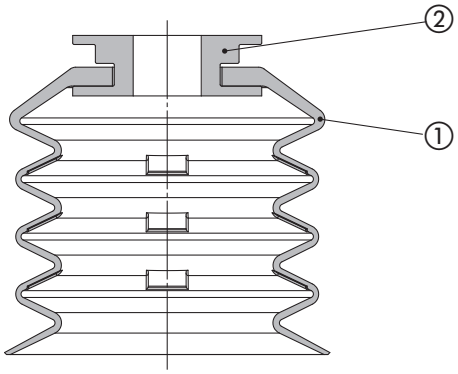

Component Parts

No.	Description	Material
1	**Pad**	Silicone rubber (Compatible with metal detectors)
2	**Retainer**	Synthetic resin (Compatible with metal detectors)

With adapter **HF3A-ZP3FS-T40ZJMS-□**

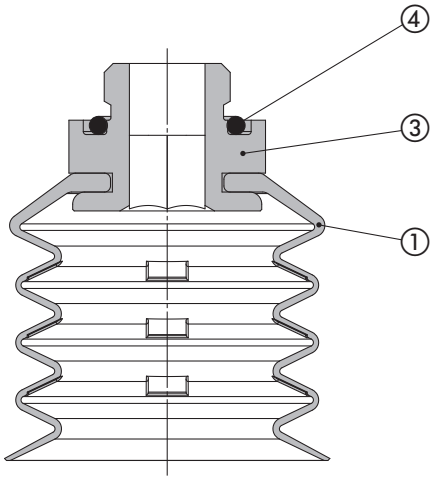

Component Parts

No.	Description	Material
1	**Pad**	Silicone rubber (Compatible with metal detectors)
3	**Adapter**	Stainless steel
4	**O-ring**	Silicone rubber

HF3A-ZP3F Series
Mounting Parts

Product part number	**With retainer** HF3A – ZP3F –D 40 ZJ MS **With adapter** HF3A – ZP3F S – T 40 ZJ MS – ① Adapter material (Stainless steel) Mounting (Retainer/Vertical adapter) Pad diameter Pad form Pad material Connection thread (Male thread)
Component parts	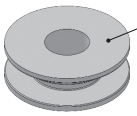 Ⓐ **Retainer** 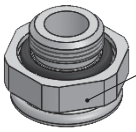 Ⓑ **Adapter assembly**

		Type	Size	Symbol	Part no.
Ⓐ **Retainer**		–	–	–	**HF3A-ZP3FA-D-ZJ**
Ⓑ **Adapter assembly**	① **Connection thread**	Male thread	G3/8	**AG03**	**HF3A-ZP3FSA-T-ZJ-AG03**
			G1/2	**AG04**	**HF3A-ZP3FSA-T-ZJ-AG04**

HF3A-ZP3F Series
Vacuum pad / Specific Product Precautions

Be sure to read this before handling the products. Refer to the back cover for safety instructions. For vacuum equipment precautions, refer to the "Handling Precautions for SMC Products" and the "Operation Manual" on the SMC website: https://www.smcworld.com

Design

1. **Before use, please check the transfer conditions with the customer's actual equipment.**

   The transfer ability varies depending on the workpiece material, the friction between the pad and workpiece, moment, wind, vibration, etc. Testing with the customer's actual equipment is necessary.

2. **The retainer type can be directly inserted into the holes of a flexible mounting part such as a resin belt for use.**

(Example) Bread depanner

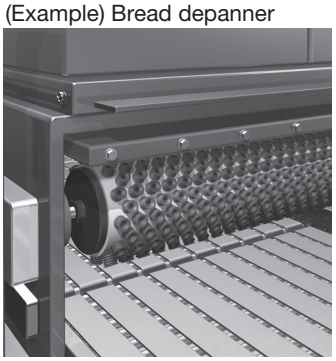

Mounting

1. **When mounting the product, tighten with the tightening torque shown in the table below.**

   If excessive or insufficient tightening torque is applied, sealing failure or loose screws may result.

   With Adapter

Model	Connection thread size	Tightening torque [N·m]
HF3A-ZP3FS-T40ZJMS-AG03	G3/8	15 to 20
HF3A-ZP3FS-T40ZJMS-AG04	G1/2	20 to 25

2. **Refer to the figure below for the recommended mounting belt dimensions for the retainer type as well as a mounting example.**

   How easy it is to mount or pull out the retainer depends on the belt hardness and material. Therefore, be sure to confirm the mounting conditions on the actual equipment before using the product.

Recommended mounting belt dimensions for the retainer type

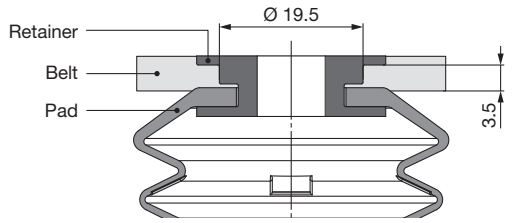

Handling

1. **vacuum pads are consumable. Please replace them when cracks or deformation is confirmed during periodic maintenance.**

2. **The colouring of the pad may be uneven.**

   Due to the characteristics of the materials, the colouring of the pad surface may be uneven. However, this does not affect the performance of the product in any way.

3. **Be sure to use under pressure and operating conditions that won't cause the vacuum pad to collapse inward.**

   Constant deformation may result in suction failure or early breakage of the pad.

⚠ Safety Instructions

These safety instructions are intended to prevent hazardous situations and/or equipment damage. These instructions indicate the level of potential hazard with the labels of **"Caution," "Warning"** or **"Danger."** They are all important notes for safety and must be followed in addition to International Standards (ISO/IEC) [1], and other safety regulations.

⚠ **Danger:**	**Danger** indicates a hazard with a high level of risk which, if not avoided, will result in death or serious injury.
⚠ **Warning:**	**Warning** indicates a hazard with a medium level of risk which, if not avoided, could result in death or serious injury.
⚠ **Caution:**	**Caution** indicates a hazard with a low level of risk which, if not avoided, could result in minor or moderate injury.

1) ISO 4414: Pneumatic fluid power – General rules and safety requirements for systems and their components.
ISO 4413: Hydraulic fluid power – General rules and safety requirements for systems and their components.
IEC 60204-1: Safety of machinery – Electrical equipment of machines. (Part 1: General requirements)
ISO 10218-1: Robots and robotic devices - Safety requirements for industrial robots - Part 1: Robots.
etc.

⚠ Warning

1. **The compatibility of the product is the responsibility of the person who designs the equipment or decides its specifications.**
   Since the product specified here is used under various operating conditions, its compatibility with specific equipment must be decided by the person who designs the equipment or decides its specifications based on necessary analysis and test results. The expected performance and safety assurance of the equipment will be the responsibility of the person who has determined its compatibility with the product. This person should also continuously review all specifications of the product referring to its latest catalogue information, with a view to giving due consideration to any possibility of equipment failure when configuring the equipment.

2. **Only personnel with appropriate training should operate machinery and equipment.**
   The product specified here may become unsafe if handled incorrectly. The assembly, operation and maintenance of machines or equipment including our products must be performed by an operator who is appropriately trained and experienced.

3. **Do not service or attempt to remove product and machinery/ equipment until safety is confirmed.**
   1. The inspection and maintenance of machinery/equipment should only be performed after measures to prevent falling or runaway of the driven objects have been confirmed.
   2. When the product is to be removed, confirm that the safety measures as mentioned above are implemented and the power from any appropriate source is cut, and read and understand the specific product precautions of all relevant products carefully.
   3. Before machinery/equipment is restarted, take measures to prevent unexpected operation and malfunction.

4. **Our products cannot be used beyond their specifications.**
   Our products are not developed, designed, and manufactured to be used under the following conditions or environments.
   Use under such conditions or environments is not covered.
   1. Conditions and environments outside of the given specifications, or use outdoors or in a place exposed to direct sunlight.
   2. Use for nuclear power, railways, aviation, space equipment, ships, vehicles, military application, equipment affecting human life, body, and property, fuel equipment, entertainment equipment, emergency shut-off circuits, press clutches, brake circuits, safety equipment, etc., and use for applications that do not conform to standard specifications such as catalogues and operation manuals.
   3. Use for interlock circuits, except for use with double interlock such as installing a mechanical protection function in case of failure. Please periodically inspect the product to confirm that the product is operating properly.

⚠ Caution

We develop, design, and manufacture our products to be used for automatic control equipment, and provide them for peaceful use in manufacturing industries.
Use in non-manufacturing industries is not covered.
Products we manufacture and sell cannot be used for the purpose of transactions or certification specified in the Measurement Act.
The new Measurement Act prohibits use of any unit other than SI units in Japan.

Limited warranty and Disclaimer/Compliance Requirements

The product used is subject to the following "Limited warranty and Disclaimer" and "Compliance Requirements".Read and accept them before using the product.

Limited warranty and Disclaimer

1. The warranty period of the product is 1 year in service or 1.5 years after the product is delivered, whichever is first. [2] Also, the product may have specified durability, running distance or replacement parts. Please consult your nearest sales branch.
2. For any failure or damage reported within the warranty period which is clearly our responsibility, a replacement product or necessary parts will be provided. This limited warranty applies only to our product independently, and not to any other damage incurred due to the failure of the product.
3. Prior to using SMC products, please read and understand the warranty terms and disclaimers noted in the specified catalogue for the particular products.

2) Vacuum pads are excluded from this 1 year warranty.
A vacuum pad is a consumable part, so it is warranted for a year after it is delivered. Also, even within the warranty period, the wear of a product due to the use of the vacuum pad or failure due to the deterioration of rubber material are not covered by the limited warranty.

Compliance Requirements

1. The use of SMC products with production equipment for the manufacture of weapons of mass destruction (WMD) or any other weapon is strictly prohibited.
2. The exports of SMC products or technology from one country to another are governed by the relevant security laws and regulations of the countries involved in the transaction. Prior to the shipment of a SMC product to another country, assure that all local rules governing that export are known and followed.

SMC Corporation (Europe)

Austria	+43 (0)2262622800	www.smc.at	office@smc.at
Belgium	+32 (0)33551464	www.smc.be	info@smc.be
Bulgaria	+359 (0)2807670	www.smc.bg	office@smc.bg
Croatia	+385 (0)13707288	www.smc.hr	office@smc.hr
Czech Republic	+420 541424611	www.smc.cz	office@smc.cz
Denmark	+45 70252900	www.smcdk.com	smc@smcdk.com
Estonia	+372 651 0370	www.smcee.ee	info@smcee.ee
Finland	+358 207513513	www.smc.fi	smcfi@smc.fi
France	+33 (0)164761000	www.smc-france.fr	supportclient@smc-france.fr
Germany	+49 (0)61034020	www.smc.de	info@smc.de
Greece	+30 210 2717265	www.smchellas.gr	sales@smchellas.gr
Hungary	+36 23513000	www.smc.hu	office@smc.hu
Ireland	+353 (0)14039000	www.smcautomation.ie	sales@smcautomation.ie
Italy	+39 03990691	www.smcitalia.it	mailbox@smcitalia.it
Latvia	+371 67817700	www.smc.lv	info@smc.lv
Lithuania	+370 5 2308118	www.smclt.lt	info@smclt.lt
Netherlands	+31 (0)205318888	www.smc.nl	info@smc.nl
Norway	+47 67129020	www.smc-norge.no	post@smc-norge.no
Poland	+48 222119600	www.smc.pl	sales@smc.pl
Portugal	+351 214724500	www.smc.eu	apoioclientept@smc.smces.es
Romania	+40 213205111	www.smcromania.ro	smcromania@smcromania.ro
Russia	+7 (812)3036600	www.smc.eu	sales@smcru.com
Slovakia	+421 (0)413213212	www.smc.sk	office@smc.sk
Slovenia	+386 (0)73885412	www.smc.si	office@smc.si
Spain	+34 945184100	www.smc.eu	post@smc.smces.es
Sweden	+46 (0)86031240	www.smc.nu	smc@smc.nu
Switzerland	+41 (0)523963131	www.smc.ch	info@smc.ch
Turkey	+90 212 489 0 440	www.smcturkey.com.tr	info@smcturkey.com.tr
UK	+44 (0)845 121 5122	www.smc.uk	sales@smc.uk
South Africa	+27 10 900 1233	www.smcza.co.za	zasales@smcza.co.za

Printing CW 00 Printed in Spain

Specifications are subject to change without prior notice and any obligation on the part of the manufacturer