Circulating Fluid Temperature Controller

R410A/R448A

New

Refrigerated Thermo-chiller

SEMI Standard
S2, S8, F47

RoHS

More effective energy-saving is achieved through use of a DC inverter compressor and an inverter pump.

Type of circulating fluid	Fluorinated fluids, Ethylene glycol aqueous solution, Water
Temperature range setting	–20 to 40 °C/10 to 60 °C/–20 to 90 °C
Cooling capacity	2 kW/4 kW/8 kW/10 kW to Max.15 kW
Temperature stability	±0.1 °C
Refrigerant	R410A (HFC)/R448A (HFC/HFO)

HRZ-F Series

SMC

CAT.EUS40-73A-UK

Energy Saving

The inverter controls the number of motor rotations of the compressor and pump according to the load from the user's application.

Power consumption Max. 65 % reduction

Operating conditions: 20 °C, 0 kW with 50 % load, 8 kW with 50 % load

Existing model	HRZ004-L	5.7 kW
F-Gas	HRZ008-WS-F	2 kW (65 % reduction)

Operating conditions: –10 °C, 0 kW with 50 % load, 4 kW with 50 % load

Existing model	HRZ004-L	5.2 kW
F-Gas	HRZ008-WS-F	2.1 kW (60 % reduction)

- Reduced running cost
- Contribution to the environmental preservation (CO_2 Emission-reducing)

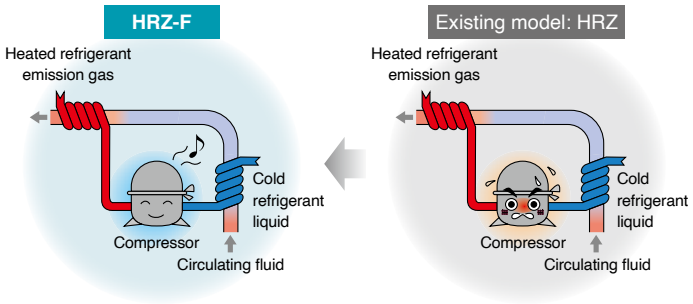

* This illustration is for an image only. For piping systems, refer to "Construction and Principles" on page 5.

Facility water Max. 67 % reduction

Operating conditions: 20 °C, 0 kW with 50 % load, 8 kW with 50 % load

Existing model	HRZ004-L	15.8 LPM
F-Gas	HRZ008-WS-F	6.5 LPM (59 % reduction)

Operating conditions: –10 °C, 0 kW with 50 % load, 4 kW with 50 % load

Existing model	HRZ004-L	12.1 LPM
F-Gas	HRZ008-WS-F	4 LPM (67 % reduction)

- Reduced facilities investment
- Space saved facility water equipment
- Reduced running cost

High Performance

Temperature stability ±0.1 °C

(When a load is stable)

Improved temperature control technology achieves temperature stability of ±0.1 °C when the load is stable.

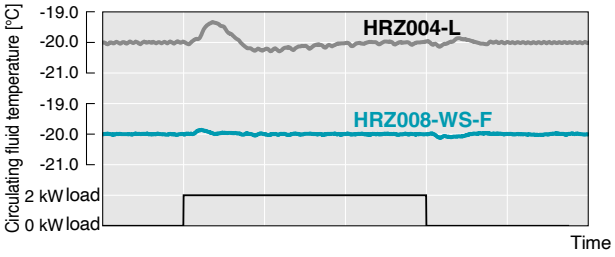

Cooling time Max. 46 % reduction

(SMC comparison)

Special temperature control technology achieved the utmost performance, resulting in the reduced cooling time.

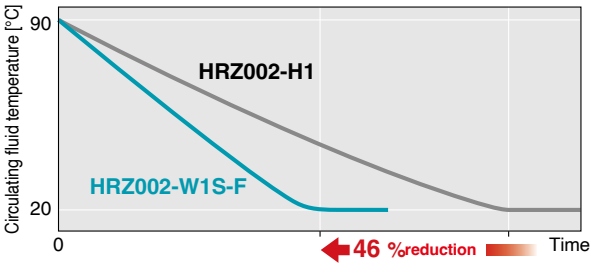

Leakless

All-in-one tank

Housing the pump or heat exchanger inside the tank has eliminated any external leakage of the circulating fluid.

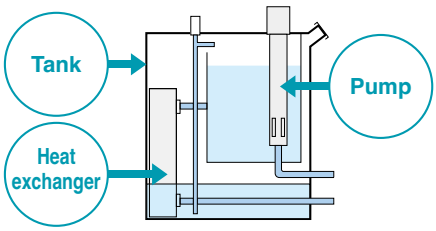

Communications

- Contact input/output signal
- Serial RS-485 communication
- Analogue communication (Refer to "Options" on page 25.)
- DeviceNet communication (Refer to "Options" on page 25.)

DeviceNet™

■ Trademark
DeviceNet® is a registered trademark of ODVA, Inc.

Fluid contact parts adopt the materials compatible for various circulating fluids. (Stainless steel, EPDM, etc.)

- Fluorinated fluids: Fluorinert™ FC-3283, FC-40, GALDEN® HT135, HT200
- 60 % ethylene glycol aqueous solution
- Deionised water/Tap water

Regarding the fluid other than the above, please contact SMC. Fluorinert™ is a trademark of 3M. GALDEN® is a registered trademark, belonging to the Solvay Group or its corresponding owner.

Easy Maintenance

Circulating fluid automatic recovery function

(Option p. 26)

Circulating fluid inside a thermo-chiller tank can be recovered automatically.
(Recovery volume: 16 L to 17 L)

- Reduced maintenance time
- Faster operation
- Reduced circulating liquid loss by evaporation or spill

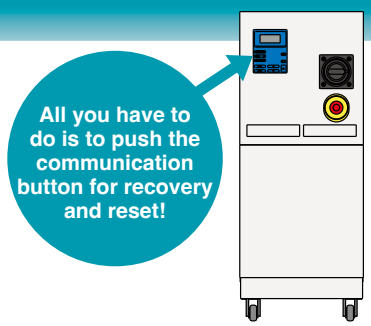

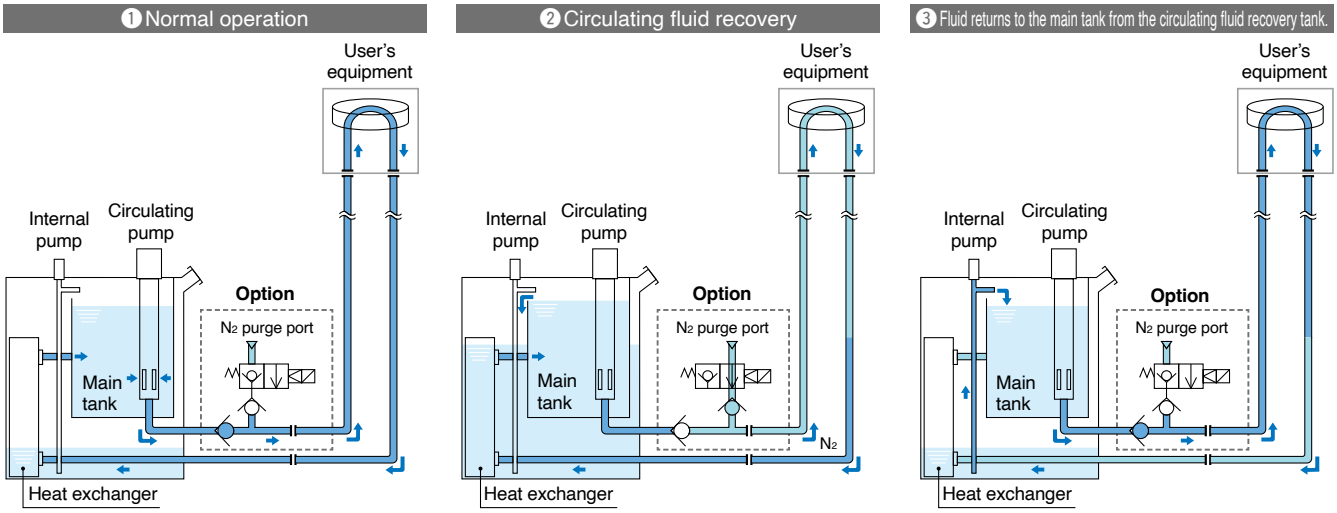

Circulating fluid electric resistance ratio control function (Option p. 25)

(DI control kit)

Easy maintenance

- Checking the electrical component parts accessible from the front side only

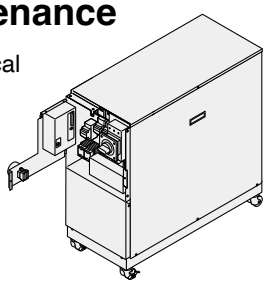

- Possible to replace the maintenance parts (such as a pump) without removing the pipings and discharging the circulating fluid.
- Various alarm displays p. 21

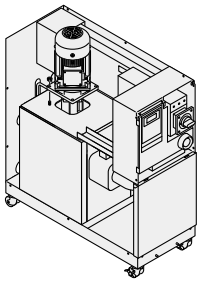

Information about EU F-Gas Regulation (573/2024)

Variations

Model	Cooling capacity	Type	Circulating fluid	Options p. 25	Standards
HRZ008-L□-F	8 kW	Pump inverter	· Fluorinated fluids · Ethylene glycol aqueous solution	· Analogue communication · DeviceNet communication · NPT fitting · SI unit only · DI control kit · Circulating fluid automatic recovery	CE UKCA UL SEMI Standard S2, S8, F47
HRZ002-W□S-F	2 kW	Pump inverter and Compressor inverter	· Fluorinated fluids · Ethylene glycol aqueous solution · Tap water/Deionised water		
HRZ004-W□S-F	4 kW				
HRZ008-W□S-F	8 kW				
HRZ010-W□S-F	10 kW				

Applications

Etching

CMP

Coaters/Developers

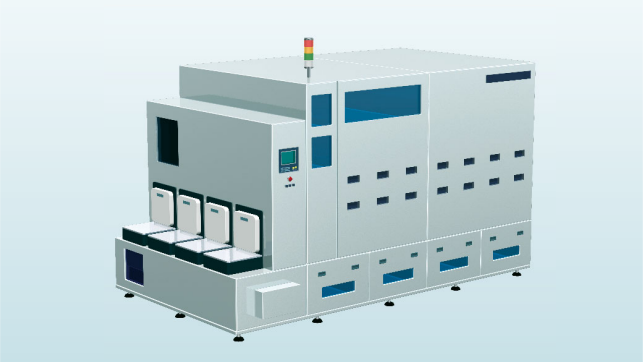

Testers

Cleaning machines

Temperature control of cleaning solution

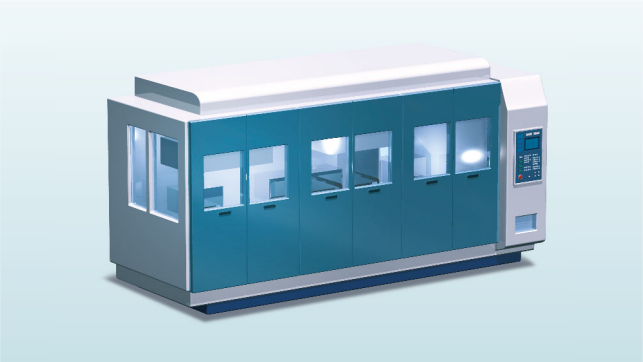

Temperature control of chamber electrode

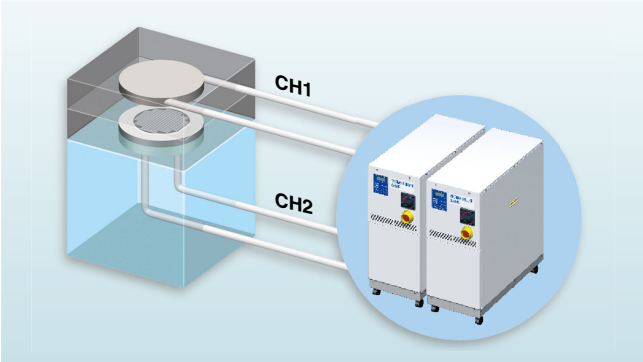

Cooling of vacuum pumps

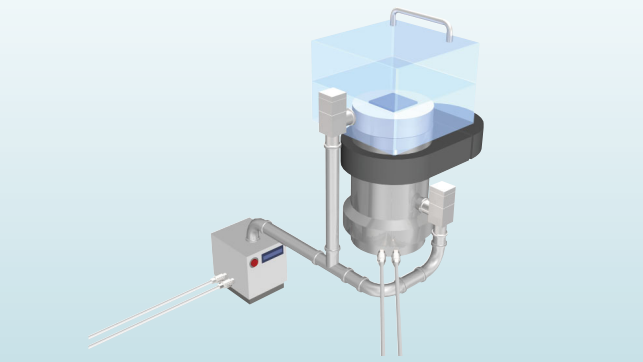

Gas cylinder cabinets

Applications

Laser beam machines/Laser welding machines
Cooling of the laser oscillation part and power source

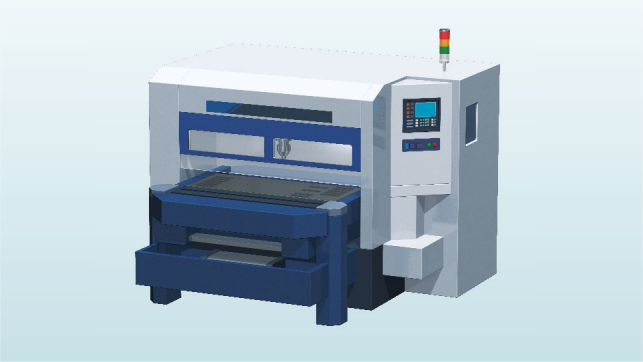

Machining centres
Cooling of the spindle

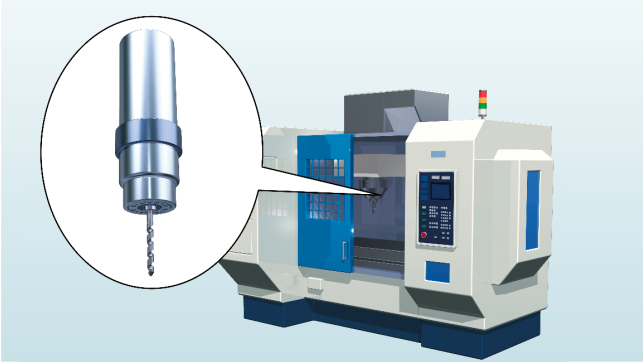

Injection molding

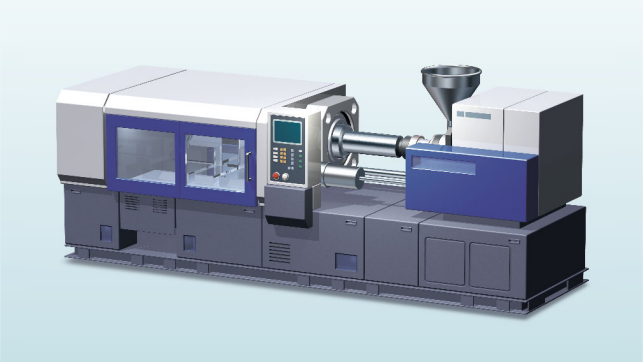

Packaging lines (sealing of film and paper package)
Cooling of workpieces for bonding

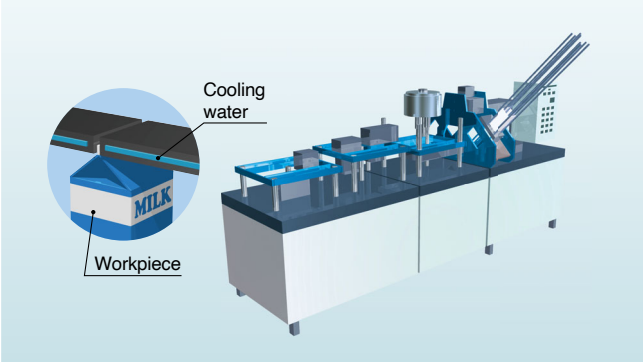

X-ray (digital) instrument
Temperature control of the X-ray tube and X-ray light sensing part

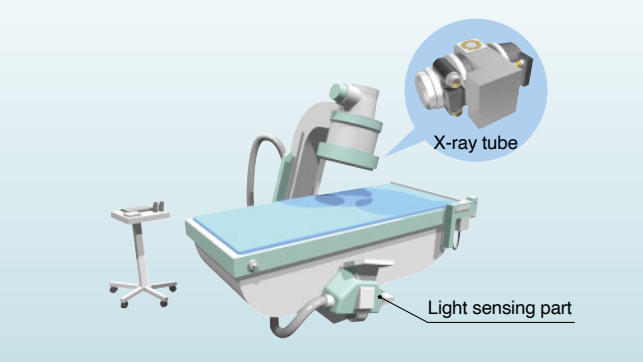

MRI

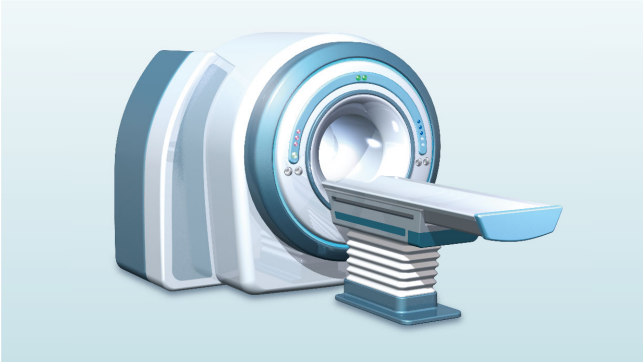

Temperature control of adhesive and paint materials

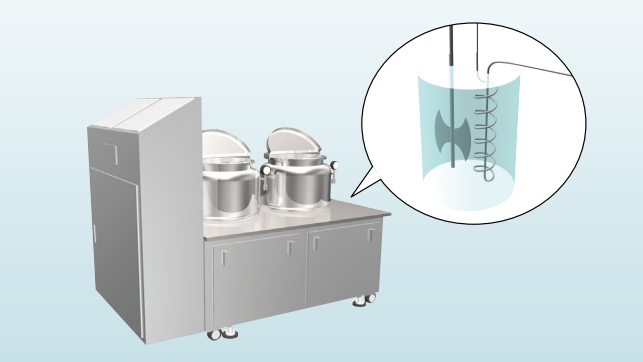

Printing machines
Temperature control of the roller

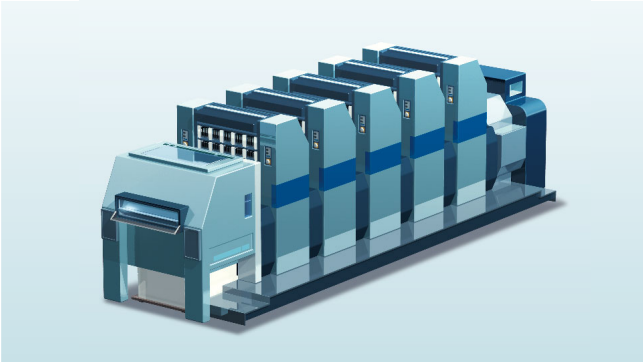

Construction and Principles

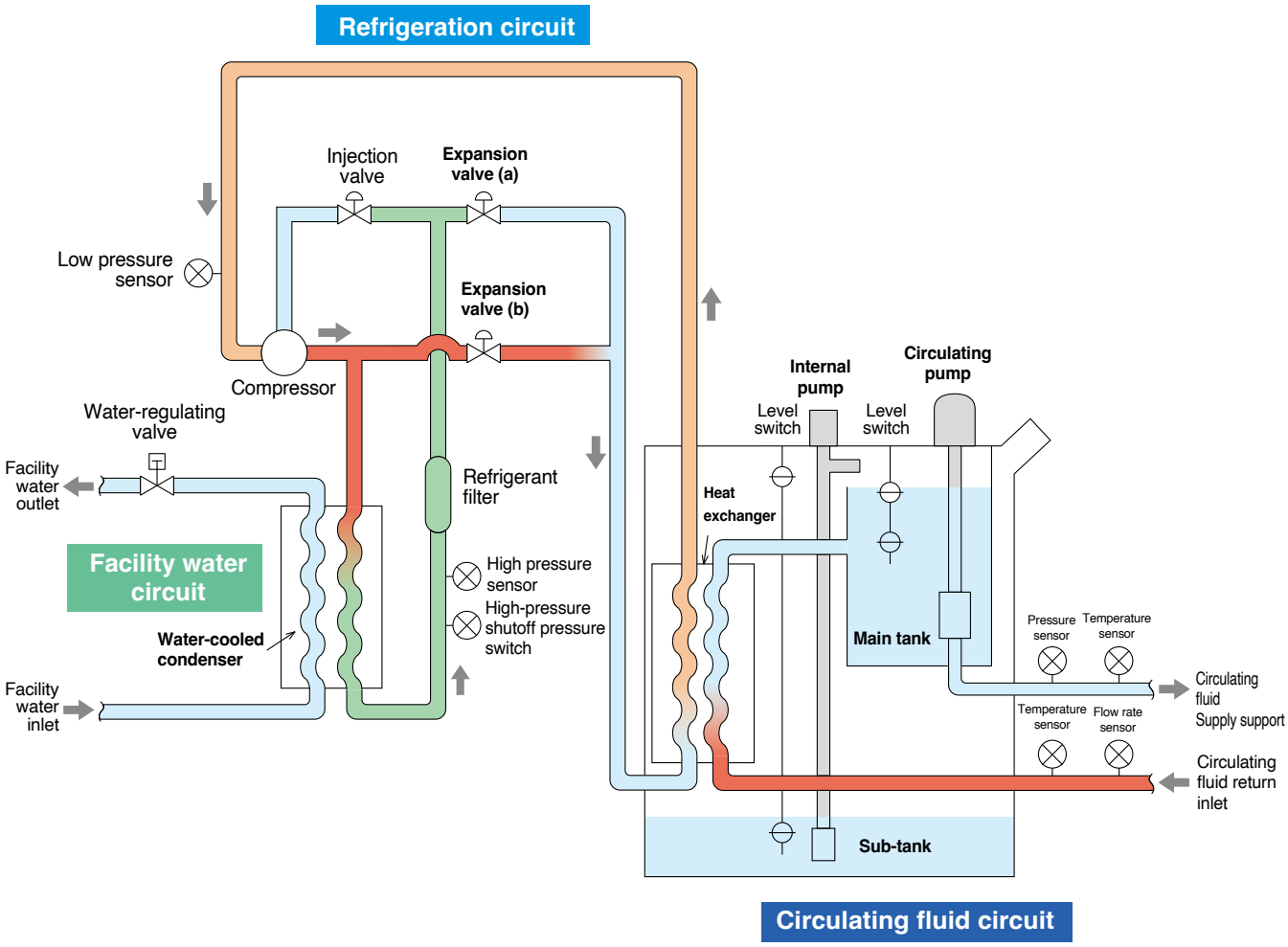

Refrigeration circuit

When the circulating fluid temperature is rising higher than the set temperature, open the **expansion valve (a)** to introduce refrigerant gas at a lower temperature to the **heat exchanger**. With this, the circulating fluid will be cooled down.

Oppositely, when the circulating fluid is getting lower against the set temperature, open the **expansion valve (b)** and introduce refrigerant gas at a high temperature without going through the **water-cooled condenser** to the **heat exchanger**. With this heat, the circulating fluid will be heated.

Circulating fluid circuit

With the **circulating pump**, circulating fluid will be discharged to the user's equipment side. After the circulating fluid will heat or cool the user's equipment side, it will be returned to the **main tank** via the **heat exchanger**.

A **sub-tank** is not used under the normal operation. It will be used when a circulating fluid is recovered from the user's equipment side.

The **internal pump** is used to transfer a circulating fluid from the **sub-tank** to the **main tank**.

(Circulating fluid automatic recovery function p. 26)

CONTENTS

HRZ-F Series

Circulating Fluid Temperature Controller

R410A/R448A Refrigerated Thermo-chiller HRZ-F Series

Model Selection

Guide to Model Selection ..... p. 7
Required Cooling Capacity Calculation ..... p. 8
Precautions on Model Selection ..... p. 9
Circulating Fluid Typical Physical Property Values ..... p. 10

Thermo-chiller
Pump Inverter and Compressor Inverter Type

How to Order ..... p. 11
Specifications ..... p. 11
Cooling Capacity ..... p. 13
Heating Capacity ..... p. 13
Pump Capacity (Thermo-chiller Outlet) ..... p. 14

Thermo-chiller Pump Inverter Type

How to Order ..... p. 15
Specifications ..... p. 15
Cooling Capacity ..... p. 16
Heating Capacity ..... p. 16
Pump Capacity (Thermo-chiller Outlet) ..... p. 16

Common Specifications

Dimensions ..... p. 17
Communication Functions ..... p. 19
Operation Display Panel ..... p. 21
Alarm ..... p. 21

Optional Accessories

① Bypass Piping Set ..... p. 22
② Anti-quake Bracket ..... p. 22
③ 4-Port Manifold ..... p. 23
④ DI Filter ..... p. 23
⑤ Insulating Material for DI Filter ..... p. 23
⑥ 60 % Ethylene Glycol Aqueous Solution ..... p. 24
⑦ Concentration Meter ..... p. 24

Options

Analogue Communication ..... p. 25
DeviceNet Communication ..... p. 25
NPT Fitting ..... p. 25
SI Unit Only ..... p. 25
DI Control Kit ..... p. 25
Circulating Fluid Automatic Recovery ..... p. 26

Specific Product Precautions ..... p. 27

HRZ-F Series
Model Selection

Guide to Model Selection

1. How much is the temperature in degrees centigrade for the circulating fluid?

Temperature range which can be set with the thermo-chiller

L : –20 °C to 40 °C
W: –20 °C to 90 °C (10 to 60 °C for HRZ□□□-W2S-F, –10 to 90 °C for HRZ002-WS/W1S-F)

Example) User requirement: 50 °C (→ W type is appropriate.)

2. What kind of the circulating fluids will be used?

Relationship between circulating fluid (which can be used with the thermo-chiller) and temperature

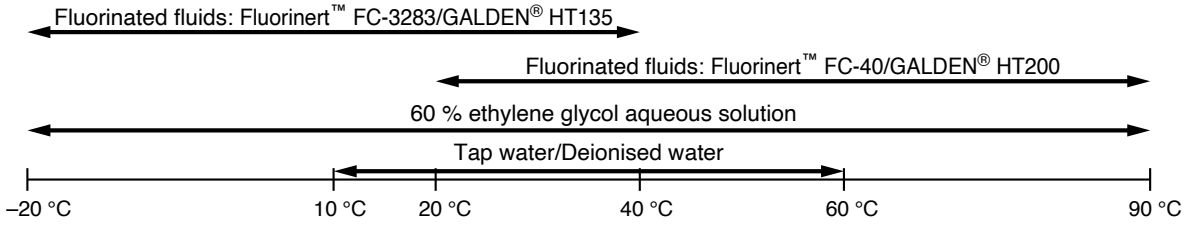

Example) User requirement: Fluorinated fluids

Based on the results in 1 and 2 above,
refer to the cooling capacity charts (pages 13 and 16) in "Fluorinated fluid."

3. What is the kW for the required cooling capacity?
∗ To calculate the cooling capacity, referring to page 8.

Example) User requirement: 5 kW → **Plot the point of intersection between the operating temperature (50 °C) and the cooling capacity (5 kW) in the cooling capacity graph.**

[Cooling Capacity Graph] Circulating Fluid: Fluorinated Fluids

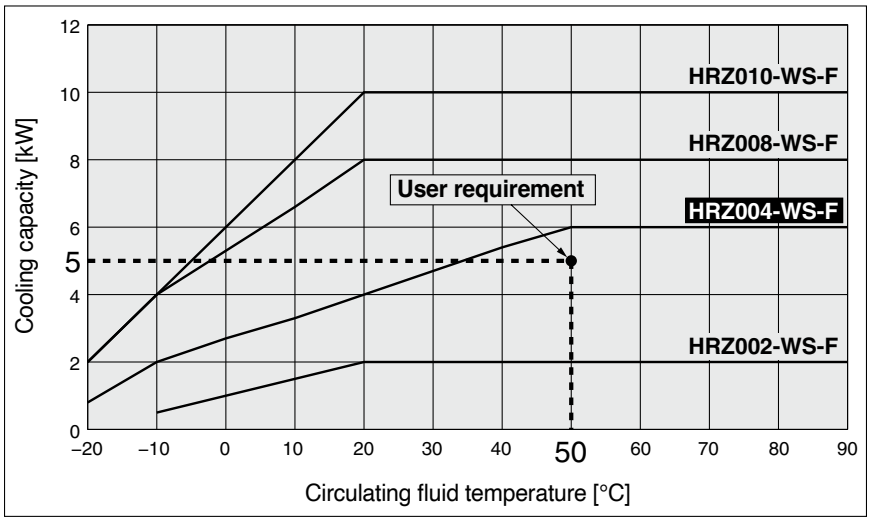

The point plotted in the graph is the requirement from the user. Select the thermo-chiller models exceeding this point. In this case, select the **HRZ004-WS-F**.

GALDEN® is a registered trademark, belonging to the Solvay Group or its corresponding owner. Fluorinert™ is a trademark of 3M.

Required Cooling Capacity Calculation

Example 1: When the heat generation amount in the user's equipment is known.

Heat generation amount Q: 3.5 kW

Cooling capacity = Considering a safety factor of 20 %, **3.5 x 1.2 = 4.2 kW**

Example 2: When the heat generation amount in the user's equipment is not known.

Obtain the temperature difference between inlet and outlet by circulating the circulating fluid inside the user's equipment.

Heat generation amount **Q**	: Unknown
Circulating fluid temperature difference Λ**T** (= **T2** – **T1**)	: 6.0 °C (6.0 K)
Circulating fluid outlet temperature **T1**	: 20 °C (293.15 K)
Circulating fluid return temperature **T2**	: 26 °C (299.15 K)
Circulating fluid flow rate **L**	: 20 l/min
Circulating fluid	: Fluorinated fluid Density γ: 1.80 x 10^3 kg/m^3 Specific heat **C**: 0.96 x 10^3 J/(kg·K) (at 20 °C)

∗ Refer to page 10 for the typical physical property values by circulating fluid.

$$Q = \frac{\Lambda T \times L \times \gamma \times C}{60 \times 1000}$$

$$= \frac{6.0 \times 20 \times 1.80 \times 10^3 \times 0.96 \times 10^3}{60 \times 1000}$$

$$= 3456\ W = 3.5\ kW$$

Cooling capacity = Considering a safety factor of 20 %,
3.5 x 1.2 = 4.2 kW

Example of conventional units (Reference)

Unknown
6.0 °C
20 °C
26 °C
1.2 m^3/h
Fluorinated fluid
Density γ: 1.80 x 10^3 kg/m^3
Specific heat **C**: 0.23 kcal/kg·°C
(at 20 °C)

∗ Refer to page 10 for the typical physical property values by circulating fluid.

$$Q = \frac{\Lambda T \times L \times \gamma \times C}{860}$$

$$= \frac{6.0 \times 1.2 \times 1.80 \times 10^3 \times 0.23}{860}$$

$$= 3.5\ kW$$

Cooling capacity = Considering a safety factor of 20 %,
3.5 x 1.2 = 4.2 kW

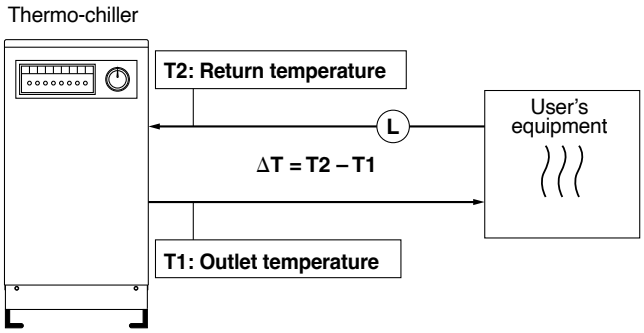

Required Cooling Capacity Calculation

Example 3. When there is no heat generation, and when cooling the object below a certain temperature and period of time.

Cooled substance total volume **V** : 60 L
Cooling time **h** : 15 min
Cooling temperature difference **ΛT**: 20 °C (20 K) (40 °C – 20 °C → 20 °C)
Circulating fluid : Fluorinated fluid
Density γ: 1.80 x 10^3 kg/m^3
Specific heat **C**: 0.96 x 10^3 J/(kg·K) (at 20 °C)

∗ Refer to page 10 for the typical physical property values by circulating fluid.

$$Q = \frac{\Lambda T \times V \times \gamma \times C}{h \times 60 \times 1000}$$

$$= \frac{20 \times 60 \times 1.80 \times 10^3 \times 0.96 \times 10^3}{15 \times 60 \times 1000}$$

= 2304 W = 2.3 kW

Cooling capacity = Considering a safety factor of 20 %,

2.3 x 1.2 = 2.8 kW (When the circulating fluid temperature is 20 °C.)

(In this case, selected thermo-chiller model will be HRZ004-WS-F.)

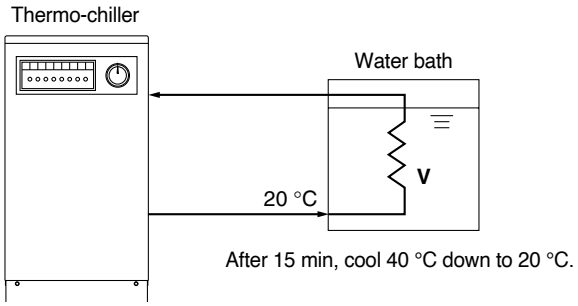

Example of conventional units (Reference)

0.06 m^3
0.25 h
20 °C
Fluorinated fluid
Density γ: 1.80 x 10^3 kg/m^3
Specific heat **C**: 0.23 kcal/kg·°C (at 20 °C)

∗ Refer to page 10 for the typical physical property values by circulating fluid.

$$Q = \frac{\Lambda T \times V \times \gamma \times C}{h \times 860}$$

$$= \frac{20 \times 0.06 \times 1.80 \times 10^3 \times 0.23}{0.25 \times 860}$$

= 2.3 kW

Cooling capacity = Considering a safety factor of 20 %,

2.3 x 1.2 = 2.8 kW (When the circulating fluid temperature is 20 °C.)

(In this case, selected thermo-chiller model will be HRZ004-WS-F.)

∗ This is the calculated value by changing the fluid temperature only. Thus, it varies substantially depending on the water bath or piping material or shape.

Precautions on Model Selection

1. Heating capacity

When setting the circulating fluid temperature at a higher temperature than the room temperature, the circulating fluid temperature will be heated with the thermo-chiller. Heating capacity varies depending on the model of the HRZ-F series. Also, the heating capacity varies depending on the circulating fluid temperature. Consider the heat radiation amount or thermal capacity of the user's equipment. Check beforehand if the required heating capacity is provided, based on the heating capacity graph for the respective model.

2. Pump capacity

<Circulating fluid flow rate>

Pump capacity varies depending on the model selected from the HRZ-F series. Also, circulating fluid flow varies depending on the circulating fluid discharge pressure. Consider the installation height difference between our thermo-chiller and a user's equipment, and the piping resistance such as circulating fluid pipings, or piping size, or piping curves in the machine. Check beforehand if the required flow is achieved using the pump capacity curves for each respective model.

<Circulating fluid discharge pressure>

Circulating fluid discharge pressure has the possibility to increase up to the maximum pressure in the pump capacity curves for the respective model. Check beforehand if the circulating fluid pipings or circulating fluid circuit of the user's equipment are fully durable against this pressure.

Circulating Fluid Typical Physical Property Values

∗ Shown below are reference values.
Please contact circulating fluid supplier for details.

Fluorinated Fluids

Physical property value / Temperature	Density γ	Specific heat C	
	[kg/m^3] [g/L]	[J/(kg·K)]	([kcal/kg·°C])
–10 °C	1.87 x 10^3	0.87 x 10^3	(0.21)
20 °C	1.80 x 10^3	0.96 x 10^3	(0.23)
50 °C	1.74 x 10^3	1.05 x 10^3	(0.25)
80 °C	1.67 x 10^3	1.14 x 10^3	(0.27)

60 % Ethylene Glycol Aqueous Solution

Physical property value / Temperature	Density γ	Specific heat C	
	[kg/m^3] [g/L]	[J/(kg·K)]	([kcal/kg·°C])
–10 °C	1.10 x 10^3	3.02 x 10^3	(0.72)
20 °C	1.08 x 10^3	3.15 x 10^3	(0.75)
50 °C	1.06 x 10^3	3.27 x 10^3	(0.78)
80 °C	1.04 x 10^3	3.40 x 10^3	(0.81)

Water

Density γ: 1 x 10^3 [kg/m^3] [g/L] **Specific heat C: 4.2 x 10^3 [J/(kg·K)] (1.0 [kcal/kg·°C])**

R410A/R448A

Thermo-chiller Pump Inverter and Compressor Inverter Type

HRZ-F Series

SEMI

RoHS

How to Order

Pump Inverter and Compressor Inverter Type

HRZ 010 – W □ S – □ F □

Cooling capacity

Symbol	Cooling capacity
002	2 kW
004	4 kW
008	8 kW
010	10 kW

Circulating fluid type

Symbol	Circulating fluid type	Temperature range setting	2 kW	4 kW	8 kW	10 kW
—	Fluorinated fluids	–10 to 90 °C	●			
		–20 to 90 °C		●	●	●
1	Ethylene glycol aqueous solution	–10 to 90 °C	●			
		–20 to 90 °C		●	●	●
2	Water	10 to 60 °C	●	●	●	●

Pump inverter and compressor inverter type

R410A/R448A

Option 1 (Refer to page 25.)

Symbol	Contents
—	None
C	Analogue communication
D	DeviceNet communication

● When multiple options are combined, indicate symbols in alphabetical order.

Option 2 (Refer to page 25.)

Symbol	Contents
—	None
N	NPT fitting
W	SI unit only
Y*1	DI control kit
Z	Circulating fluid automatic recovery

● When multiple options are combined, indicate symbols in alphabetical order.

*1 Not equipped to the fluorinated fluid type.

Specifications

	Model	HRZ002-WS-F	HRZ004-WS-F	HRZ008-WS-F	HRZ010-WS-F
	Channel/Cooling method	1 channel/Water-cooled refrigeration			
	Temperature control method	PID control			
	Refrigerant	R410A (HFC, GWP: 2,088)			
	Refrigerant charge kg	1.5			
Installation environment	Ambient temperature °C	10 to 35			
	Ambient humidity*1 %RH	30 to 70			
	Altitude m	1000 or less			
Circulating fluid system	Circulating fluid*2	Fully fluorinated fluid –20 to 40 °C: Fluorinert™ FC-3283 GALDEN® HT135 20 to 90 °C: Fluorinert™ FC-40 GALDEN® HT200			
	Temperature range setting*1/Temperature stability*3 °C	–10 to 90/±0.1	–20 to 90/±0.1		
	Cooling capacity*4 (Under conditions below) kW	2 (0.5)	4 (2)	8 (4)	10 (4)
	Circulating fluid temperature °C	20 (–10)			
	Facility water temperature °C	25			
	Circulating fluid flow rate l/min	20			
	Pump capacity*5 MPa	0.65 (at 20 l/min) With flow control function by pump inverter			0.72 (at 20 l/min) With flow control function by pump inverter
	Rated flow*6 l/min	20			
	Flow display range l/min	10 to 40			
	Flow range*7 l/min	10 to 40			
	Discharge pressure display range MPa	0 to 1.5			
	Tank: Main tank capacity*8 L	Approx. 15			
	Tank: Sub-tank capacity*9 L	Approx. 16			
	Contact material for circulating fluid	Stainless steel, EPDM, Copper brazing (Heat exchanger), Silicone, PPS, Fluororesin			
	Height difference between this product and customer's equipment m	10 or less			
	Outlet port size	Rc3/4 (With plug)			
	Return port size	Rc3/4 (With plug)			
	Drain port size	Rc3/8 (With valve/plug)			
Cooling water system	Temperature °C	10 to 30			
	Inlet pressure MPa	0.3 to 0.7			
	Inlet-outlet pressure differential of facility water MPa	0.3 or more			
	Required flow rate*10 l/min	10	12	15	
	Inlet port size	Rc1/2 (With plug)			
	Outlet port size	Rc1/2 (With plug)			
	Contact material for cooling water	Stainless steel, EPDM, Copper brazing (Heat exchanger), Silicone, Brass, NBR			
Electrical system	Voltage V	3-phase 200 VAC/200 to 208 ±10 [%] (50/60 Hz)			
	Max. operating current A	16	22	23	26
	Breaker capacity A	20 (Earth leakage breaker sensitivity current: 30 mA)	30 (Earth leakage breaker sensitivity current: 30 mA)		
	Communication function	Contact input/output (D-sub 25P, Female connector) Serial RS-485 (D-sub 9P, Female connector)			
	External dimensions mm	380 x 870 x 950			
	Weight*11 kg	165 ±5			
	Compliant standards	SEMI, CE/UKCA marking, UL			

*1 No condensation should be present.
*2 GALDEN® is a registered trademark, belonging to the Solvay Group or its corresponding owner. Fluorinert™ is a trademark of 3M.
*3 Value with a stable load without turbulence in the operating conditions.
*4 ① Facility water temperature: 25 °C, ② Circulating fluid flow rate: Values at the rated circulating fluid flow rate. Values common for 50/60 Hz.
*5 The capacity at the thermo-chiller outlet when the circulating fluid temperature is 20 °C
*6 The required flow rate for maintaining the cooling capacity or temperature stability. When used below the rated flow, use the individually sold, "Bypass Piping Set." (Refer to page 22).
*7 May not be able to control with the set value depending on the piping specification in the user side.
*8 Minimum volume required for operating only the thermo-chiller. (Circulating fluid temperature: 20 °C, including the thermo-chiller's internal pipings or heat exchanger)
*9 Preliminary space volume without main tank capacity. Available for collecting the circulating fluid inside an external piping or for preliminary injection.
*10 Facility water temperature: 25 °C. Flow rate required when the temperature setting is changed
*11 Weight in the dry state without circulating fluids

Specifications

Model			HRZ002-W1S-F	HRZ004-W1S-F	HRZ008-W1S-F	HRZ010-W1S-F	HRZ002-W2S-F	HRZ004-W2S-F	HRZ008-W2S-F	HRZ010-W2S-F
Channel/Cooling method			1 channel/Water-cooled refrigeration				1 channel/Water-cooled refrigeration			
Temperature control method			PID control				PID control			
Refrigerant			R410A (HFC, GWP: 2,088)				R410A (HFC, GWP: 2,088)			
Refrigerant charge		kg	1.5				1.5			
Installation environment	Ambient temperature	°C	10 to 35				10 to 35			
	Ambient humidity*1	%RH	30 to 70				30 to 70 (No condensation)			
	Altitude	m	1000 or less				1000 or less			
Circulating fluid system	Circulating fluid*2		60 % ethylene glycol aqueous solution				Tap water/Deionised water			
	Temperature range setting*1/ Temperature stability*3	°C	–10 to 90/±0.1	–20 to 90/±0.1			10 to 60/±0.1			
	Cooling capacity*4 (Under conditions below)	kW	2	4 (2)	8 (4)	10 (4)	2	4	8	10
	Circulating fluid temperature	°C	20	20 (–10)			20			
	Facility water temperature	°C	25				25			
	Circulating fluid flow rate	l/min	20				20			
	Pump capacity*5	MPa	0.40 (at 20 l/min) With flow control function by pump inverter				0.38 (at 20 l/min) With flow control function by pump inverter			
	Rated flow*6	l/min	20				20			
	Flow display range	l/min	10 to 40				10 to 40			
	Flow range*7	l/min	10 to 40				10 to 40			
	Discharge pressure display range	MPa	0 to 1.5				0 to 1.5			
	Tank: Main tank capacity*8	L	Approx. 15				Approx. 15			
	Tank: Sub-tank capacity*9	L	Approx. 16				Approx. 16			
	Contact material for circulating fluid		Stainless steel, EPDM, Copper brazing (Heat exchanger), Silicone, PPS, Fluororesin				Stainless steel, EPDM, Copper brazing (Heat exchanger), Silicone, PPS, Fluororesin			
	Height difference between this product and user's equipment	m	10 or less				10 or less			
	Outlet port size		Rc3/4 (With plug)				Rc3/4 (With plug)			
	Return port size		Rc3/4 (With plug)				Rc3/4 (With plug)			
	Drain port size		Rc3/8 (With valve/plug)				Rc3/8 (With valve/plug)			
Cooling water system	Temperature	°C	10 to 30				10 to 30			
	Inlet pressure	MPa	0.3 to 0.7				0.3 to 0.7			
	Inlet-outlet pressure differential of facility water	MPa	0.3 or more				0.3 or more			
	Required flow rate*10	l/min	10	12	15		10	12	15	
	Inlet port size		Rc1/2 (With plug)				Rc1/2 (With plug)			
	Outlet port size		Rc1/2 (With plug)				Rc1/2 (With plug)			
	Contact material for cooling water		Stainless steel, EPDM, Copper brazing (Heat exchanger), Silicone, Brass, NBR				Stainless steel, EPDM, Copper brazing (Heat exchanger), Silicone, Brass, NBR			
Electrical system	Voltage	V	3-phase 200 VAC/200 to 208 ±10 [%] (50/60 Hz)				3-phase 200 VAC/200 to 208 ±10 [%] (50/60 Hz)			
	Max. operating current	A	15	22	22	25	15	18	21	25
	Breaker capacity	A	20 (Earth leakage breaker sensitivity current: 30 mA)	30 (Earth leakage breaker sensitivity current: 30 mA)			20 (Earth leakage breaker sensitivity current: 30 mA)	30 (Earth leakage breaker sensitivity current: 30 mA)		
	Communication function		Contact input/output (D-sub 25P, Female connector) Serial RS-485 (D-sub 9P, Female connector)				Contact input/output (D-sub 25P, Female connector) Serial RS-485 (D-sub 9P, Female connector)			
External dimensions		mm	380 x 870 x 950				380 x 870 x 950			
Weight*11		kg	165 ±5				165 ±5			
Compliant standards			SEMI, CE/UKCA marking, UL				SEMI, CE/UKCA marking, UL			

*1 No condensation should be present.
*2 Dilute pure ethylene glycol with tap water. Additives such as preservatives cannot be used. If water is used, about the water quality SMC recommends, please refer to "Specific Product Precautions". The minimum electric conductivity of the deionised water used as the fluid should be 0.5 μS/cm (or electric resistivity 2 MΩ·cm at maximum).
*3 Value with a stable load without turbulence in the operating conditions. It may be out of this range when a DI control kit (option Y) is used or in some other operating conditions.
*4 ① Facility water temperature: 25 °C, ② Circulating fluid flow rate: Values at the rated circulating fluid flow rate. Values common for 50/60 Hz.
*5 The capacity at the thermo-chiller outlet when the circulating fluid temperature is 20 °C
*6 The required flow rate for maintaining the cooling capacity or temperature stability. When used below the rated flow, use the individually sold, "Bypass Piping Set." (Refer to page 22).
*7 May not be able to control with the set value depending on the piping specification in the user side.
*8 Minimum volume required for operating only the thermo-chiller. (Circulating fluid temperature: 20 °C, including the thermo-chiller's internal pipings or heat exchanger)
*9 Preliminary space volume without main tank capacity. Available for collecting the circulating fluid inside an external piping or for preliminary injection.
*10 Facility water temperature: 25 °C. Flow rate required when the temperature setting is changed
*11 Weight in the dry state without circulating fluids

Cooling Capacity

HRZ002/004/008/010-WS-F/W1S-F

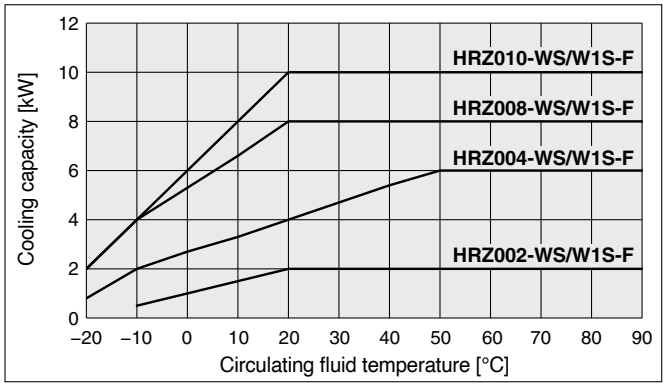

HRZ002/004/008/010-W2S-F

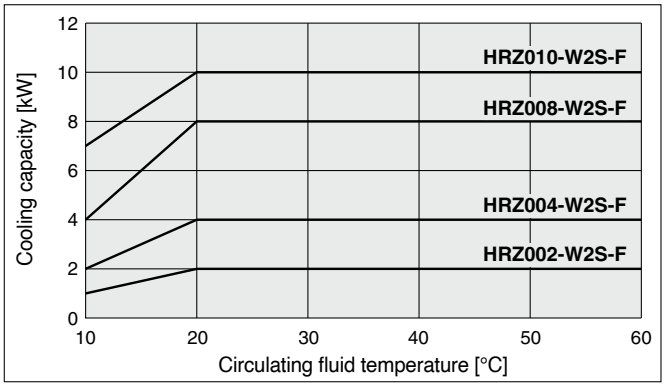

Heating Capacity

HRZ002/004/008/010-WS-F

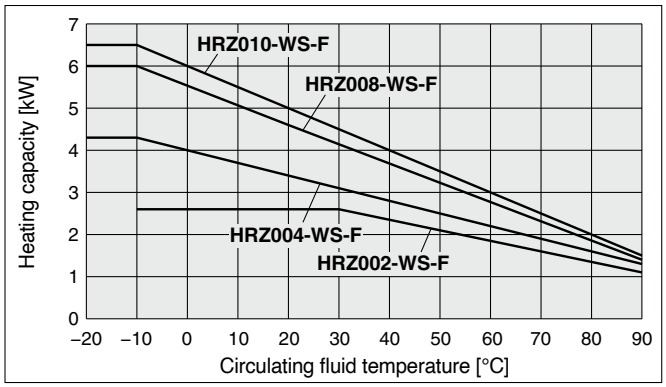

HRZ002/004/008/010-W1S-F

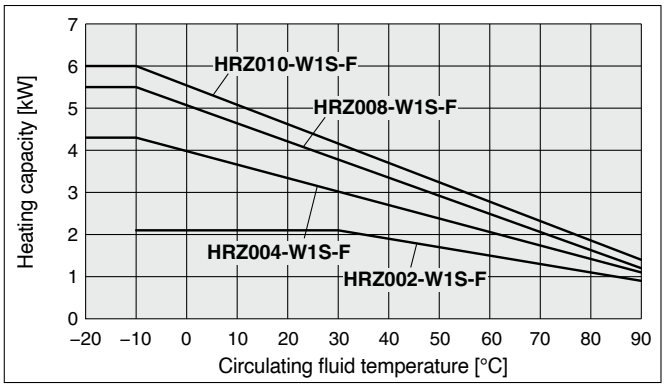

HRZ002/004/008/010-W2S-F

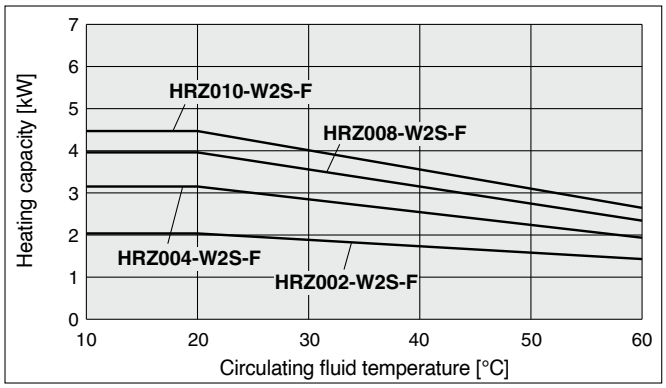

∗ When pump inverter is operating at frequency of 60 Hz (maximum).

Pump Capacity (Thermo-chiller Outlet)

HRZ002/004/008/010-WS-F

Circulating fluid: FC-3283

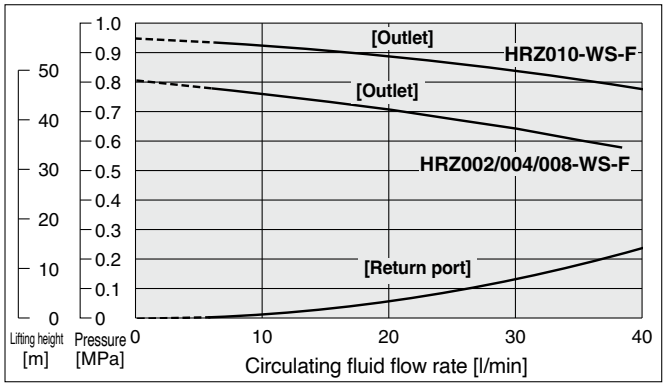

HRZ002/004/008/010-W1S-F

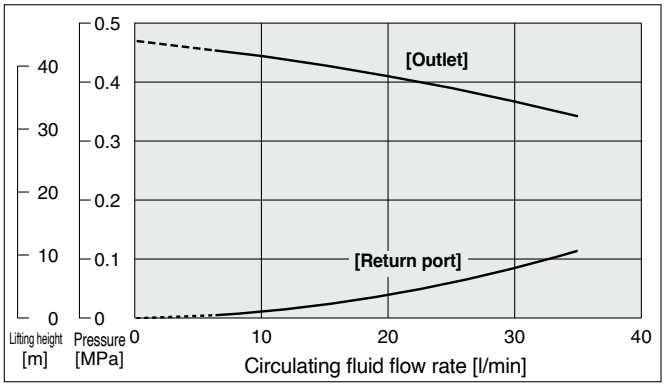

HRZ002/004/008/010-W2S-F

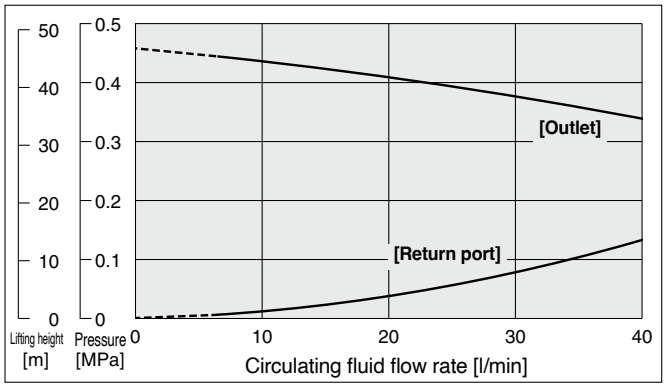

* Circulating fluid temperature: 20 °C
  When the operation of the inverter is at maximum frequency
* When the circulating fluid flow is below 6 l/min, the in-built operation stop alarm will be activated.
  It is not possible to run the equipment. (common for all models)
* With flow control function by inverter

R410A/R448A

Thermo-chiller Pump Inverter Type

HRZ-F Series

SEMI

RoHS

How to Order

Pump Inverter Type **HRZ 008 – L □ – □ F □**

Cooling capacity

Symbol	Cooling capacity
008	8 kW

Temperature range setting

Symbol	Temperature range setting
L	–20 to 40 °C

Circulating fluid type

Symbol	Circulating fluid
—	Fluorinated fluids
1	Ethylene glycol aqueous solution

Option 1 (Refer to page 25.)

Symbol	Contents
—	None
C	Analogue communication
D	DeviceNet communication

- When multiple options are combined, indicate symbols in alphabetical order.

R410A/R448A

Option 2 (Refer to page 25.)

Symbol	Contents
—	None
N	NPT fitting
W	SI unit only
Y*1	DI control kit
Z	Circulating fluid automatic recovery

- When multiple options are combined, indicate symbols in alphabetical order.

*1 Not equipped to the fluorinated fluid type.

Specifications

	Model		HRZ008-L-F	HRZ008-L1-F
	Channel/Cooling method		1 channel/Water-cooled refrigeration	
	Temperature control method		PID control	
	Refrigerant		R448A (HFC/HFO, GWP: 1,387)	
	Refrigerant charge	kg	2.0	
Installation environment	Ambient temperature	°C	10 to 35	
	Ambient humidity*1	%RH	30 to 70	
	Altitude	m	1000 or less	
Circulating fluid system	Circulating fluid*2		Fully fluorinated fluid Fluorinert™ FC-3283 GALDEN® HT135	60 % ethylene glycol aqueous solution
	Temperature range setting*1/Temperature stability*3	°C	–20 to 40/±0.1	
	Cooling capacity*4 (Under conditions below)	kW	8	
	Circulating fluid temperature	°C	–10	
	Facility water temperature	°C	25	
	Circulating fluid flow rate	l/min	30	20
	Pump capacity*5	MPa	0.95 (at 30 l/min) With flow control function by pump inverter	0.4 (at 30 l/min) With flow control function by pump inverter
	Rated flow*6	l/min	30	20
	Flow display range	l/min	10 to 40	
	Flow range*7	l/min	15 to 40	10 to 40
	Discharge pressure display range	MPa	0 to 1.5	
	Tank: Main tank capacity*8	L	Approx. 22	
	Tank: Sub-tank capacity*9	L	Approx. 17	
	Contact material for circulating fluid		Stainless steel, EPDM, Copper brazing (Heat exchanger), Silicone, PPS, Fluororesin	
	Height difference between this product and user's equipment	m	10 or less	
	Outlet port size		Rc3/4 (With plug)	
	Return port size		Rc3/4 (With plug)	
	Drain port size		Rc3/8 (With valve/plug)	
Cooling water system	Temperature	°C	10 to 25	
	Inlet pressure	MPa	0.3 to 0.7	
	Inlet-outlet pressure differential of facility water	MPa	0.3 or more	
	Required flow rate*10	l/min	18/23 (50/60 Hz)	
	Inlet port size		Rc1/2 (With plug)	
	Outlet port size		Rc1/2 (With plug)	
	Contact material for cooling water		Stainless steel, EPDM, Copper brazing (Heat exchanger), Silicone, Brass, NBR	
Electrical system	Voltage	V	3-phase 200 VAC/200 to 208 ±10 [%] (50/60 Hz)	
	Max. operating current	A	46	
	Breaker capacity	A	60 (Earth leakage breaker sensitivity current: 30 mA)	
	Communication function		Contact input/output (D-sub 25P, Female connector) Serial RS-485 (D-sub 9P, Female connector)	
	External dimensions	mm	415 x 1080 x 1075	
	Weight*11	kg	236 ±5	
	Compliant standards		SEMI, CE/UKCA marking, UL	

*1 No condensation should be present.
*2 GALDEN® is a registered trademark, belonging to the Solvay Group or its corresponding owner. Fluorinert™ is a trademark of 3M. Dilute pure ethylene glycol with tap water. Additives such as preservatives cannot be used.
*3 Value with a stable load without turbulence in the operating conditions. It may be out of this range when a DI control kit (option Y) is used or in some other operating conditions.
*4 ① Facility water temperature: 25 °C, ② Circulating fluid flow rate: Values at the rated circulating fluid flow rate. Values common for 50/60 Hz.
*5 The capacity at the thermo-chiller outlet when the circulating fluid temperature is 20 °C
*6 The required flow rate for maintaining the cooling capacity or temperature stability. When used below the rated flow, use the individually sold, "Bypass Piping Set." (Refer to page 22).
*7 May not be able to control with the set value depending on the piping specification in the user side.
*8 Minimum volume required for operating only the thermo-chiller. (Circulating fluid temperature: 20 °C, including the thermo-chiller's internal pipings or heat exchanger)
*9 Preliminary space volume without main tank capacity. Available for collecting the circulating fluid inside an external piping or for preliminary injection.
*10 The required flow rate when the cooling capacity load is applied at a facility water temperature of 25 °C
*11 Weight in the dry state without circulating fluids

Cooling Capacity

HRZ008-L-F/HRZ008-L1-F

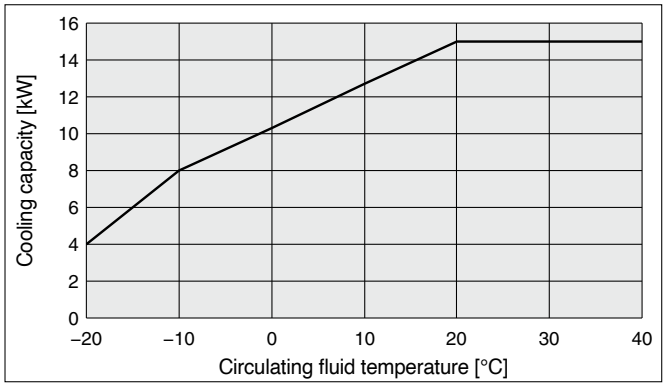

Heating Capacity

HRZ008-L-F

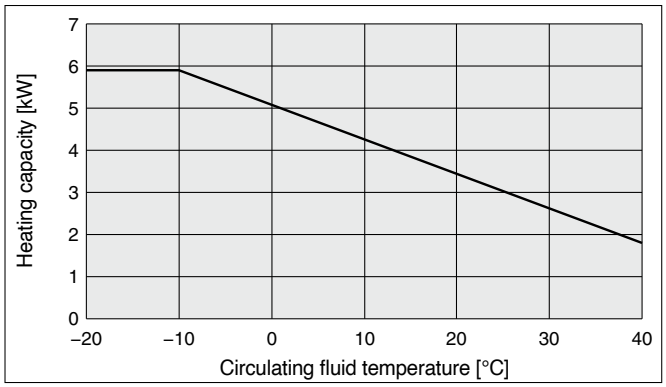

HRZ008-L1-F

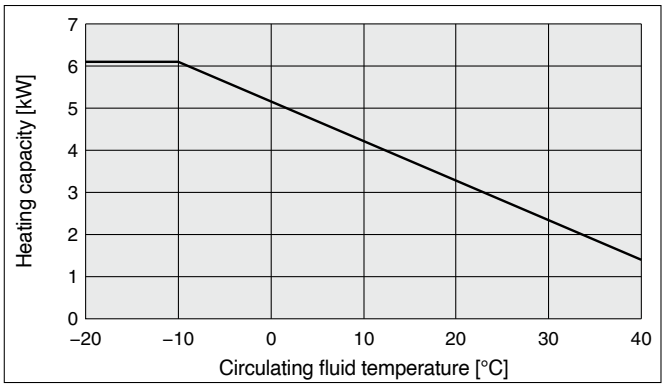

∗ When pump inverter is operating at frequency of 60 Hz (maximum).

Pump Capacity (Thermo-chiller Outlet)

HRZ008-L-F

Circulating fluid: FC-3283

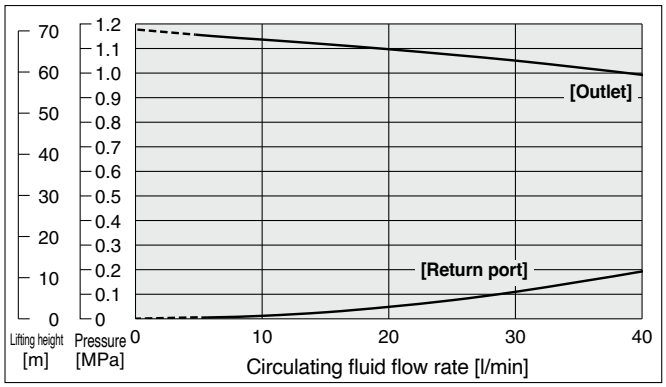

HRZ008-L1-F

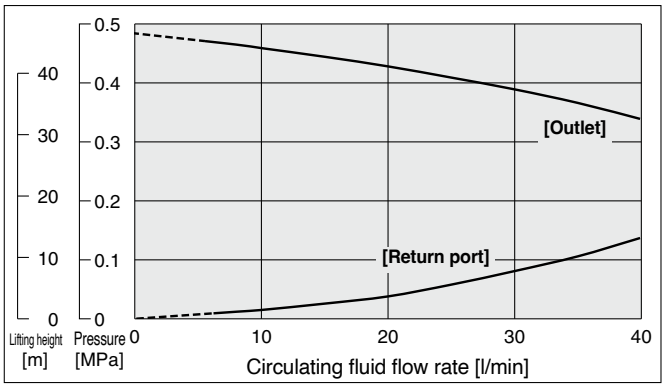

∗ Circulating fluid temperature: 20 °C
When the operation of the inverter is at maximum frequency
∗ When the circulating fluid flow is below 6 l/min, the in-built operation stop alarm will be activated.
It is not possible to run the equipment. (common for all models)
∗ With flow control function by inverter

Dimensions

HRZ002-WS-F/HRZ002-W1S-F/HRZ002-W2S-F
HRZ004-WS-F/HRZ004-W1S-F/HRZ004-W2S-F
HRZ008-WS-F/HRZ008-W1S-F/HRZ008-W2S-F
HRZ010-WS-F/HRZ010-W1S-F/HRZ010-W2S-F

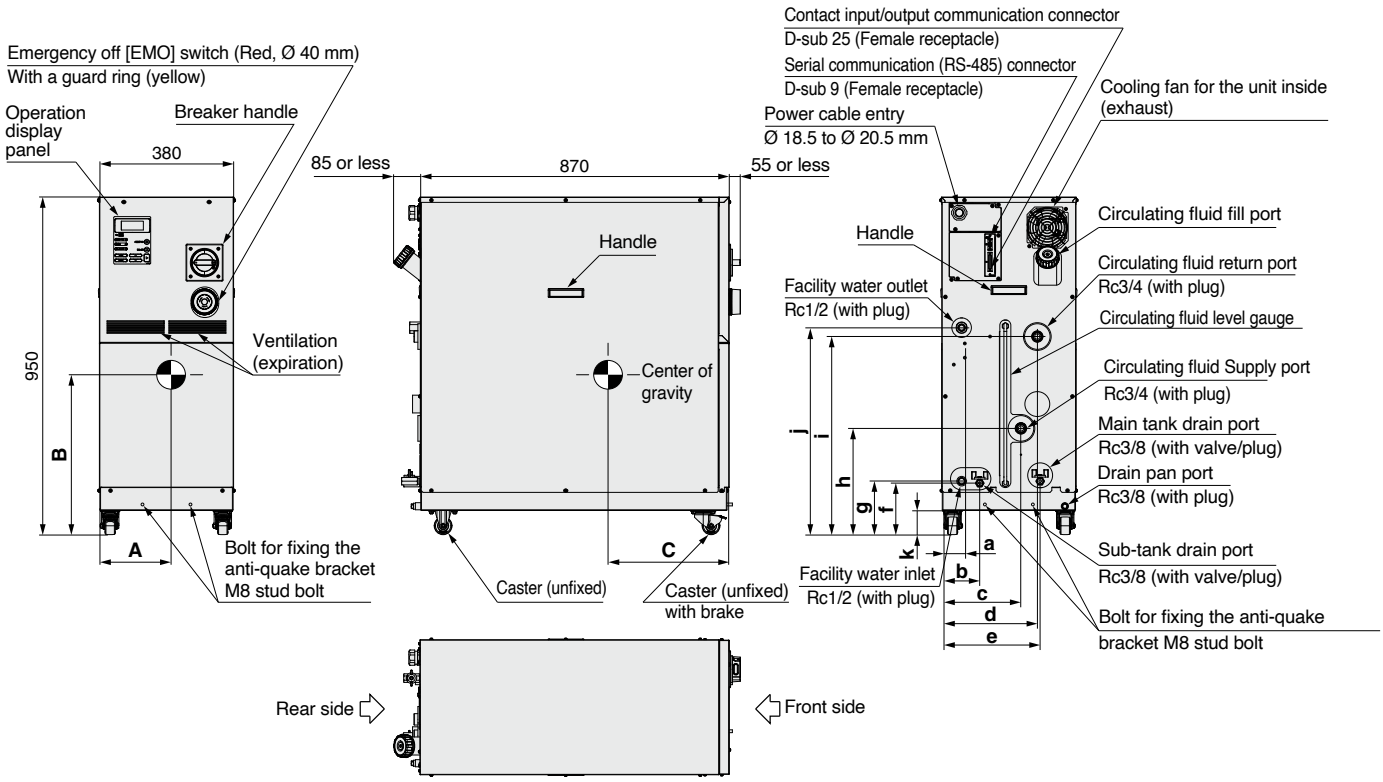

[mm]

A	B	C	a	b	c	d	e	f	g	h	i	j	k	Weight [kg]
205	439	450	57	108	224	270	278	145	151	299	558	583	68	165 ±5

* Dimensional tolerance: ±10 mm
* The product weight does not include the weight of circulating fluid; the weight refers to the product in a dry state.

Dimensions

HRZ008-L-F, HRZ008-L1-F

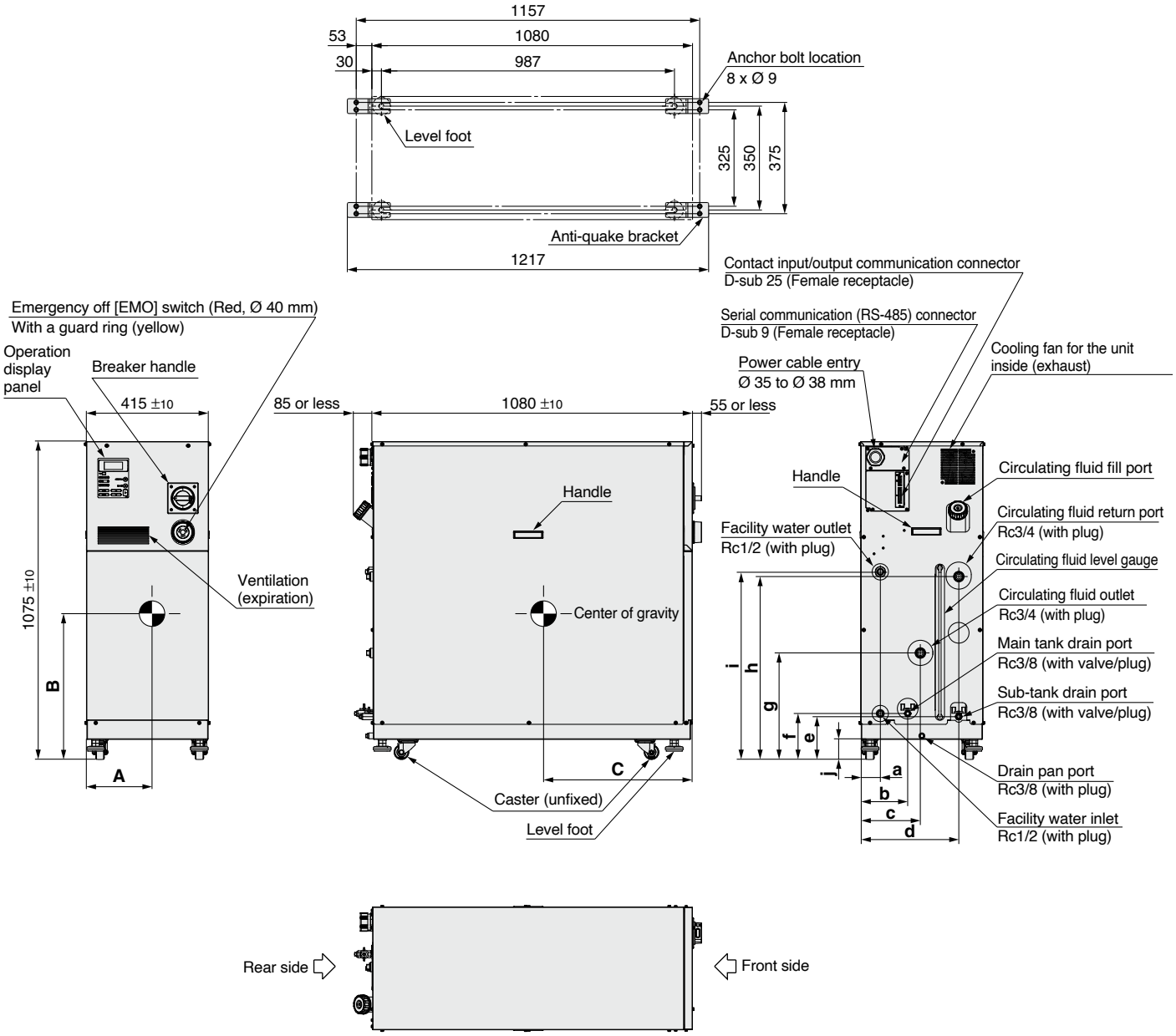

Anti-quake bracket mounting position (Dimensional tolerance: ±5 mm)

∗ Anchor bolts (M8, 8 pcs.) which are suitable for the floor material should be prepared by user.

[mm]

A	B	C	a	b	c	d	e	f	g	h	i	j	Weight [kg]
215	443	427	67	160	203	332	145	156	360	619	635	68	236 ±5

∗ Dimensional tolerance: ±10 mm
∗ The product weight does not include the weight of circulating fluid; the weight refers to the product in a dry state.

Communication Functions (For details, please refer to our “Communication Specifications” information.)

Contact Input/Output

Item		Specifications
Connector no.		P1
Connector type (on this product’s side)		D-sub 25 P type, Female connector (M2.6 x 0.45 screw fixed type)
Input signal	Insulation method	Photocoupler
	Rated input voltage	24 VDC
	Rated input current	5 mA TYP
	Input impedance	4.7 kΩ
Contact output signal	Rated load voltage	48 VAC or less/30 VDC or less
	Maximum load current*1	800 mA AC/DC (Resistance load/Inductive load)
Circuit diagram		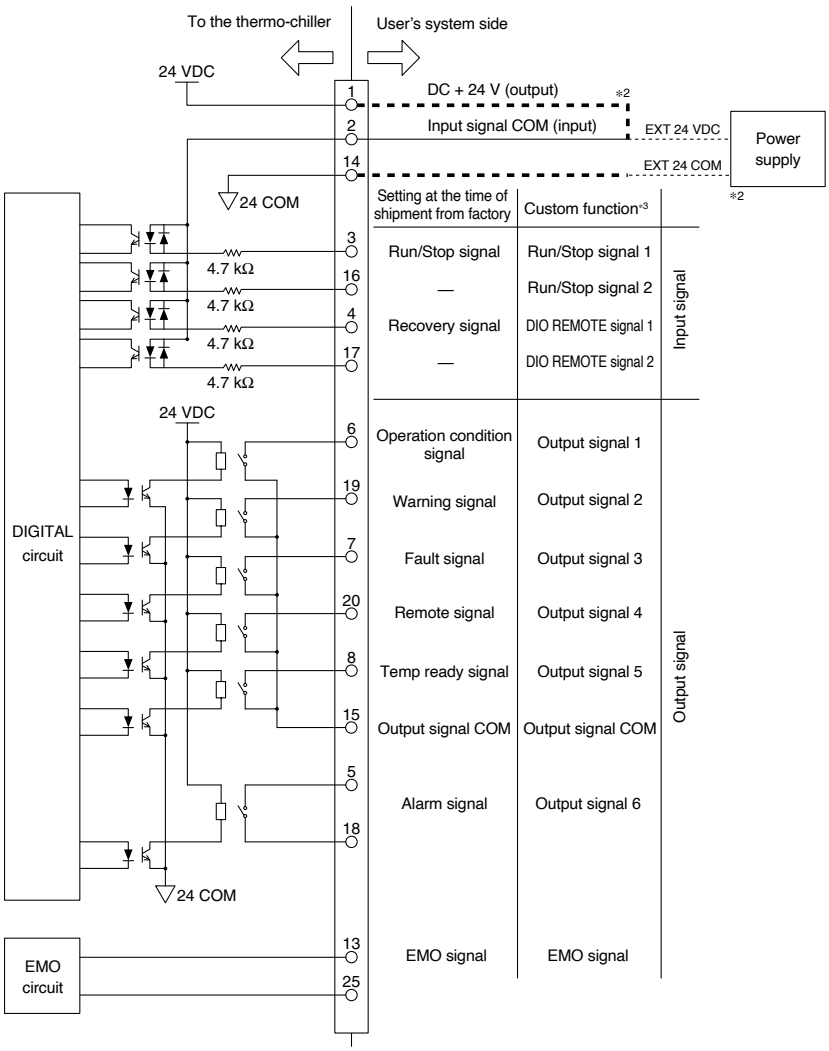

*1 When Common uses a common signal, the total load must be 800 mA or less.
*2 When the power supply of the thermo-chiller is used, connect pin No. 1 to pin No. 2, and the COM side of contact input signals to pin No. 14.
When user’s power supply is used, connect the + side of 24 VDC to pin No. 2 and connect the COM side of contact input signals to the COM of the user’s system power supply.
Incorrect connection leads to malfunction.
*3 The custom function is equipped for contact input/output. Using the custom function enables the user to set the signal type for contact input/output or pin assignment numbers.
For details, please refer to the “Communication Specifications” information.

Serial RS-485

The serial RS-485 enables the following items to be written and read out.

<Writing>
Run/Stop
Circulating fluid temperature setting
Circulating fluid automatic recovery start/stop*1

<Readout>
Circulating fluid present temperature
Circulating fluid flow
Circulating fluid discharge pressure
Circulating fluid electric resistivity*2
Alarm occurrence information
Status (operating condition) information

*1 Only when the circulating fluid automatic recovery function (option Z) is selected.
*2 Only when the DI control kit (option Y) is selected.

Item	Specifications
Connector no.	P2
Connector type (on this product's side)	D-sub 9 P type, Female connector
Fixing bolt size	M2.6 x 0.45
Standards	EIA RS485
Protocol	Modicon Modbus
Circuit diagram	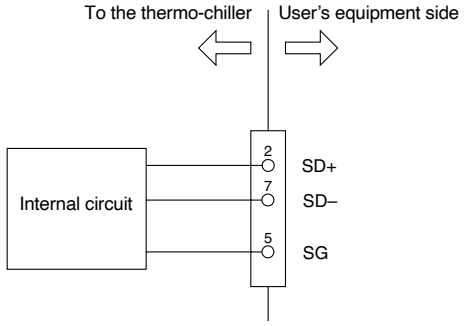

Connector Location

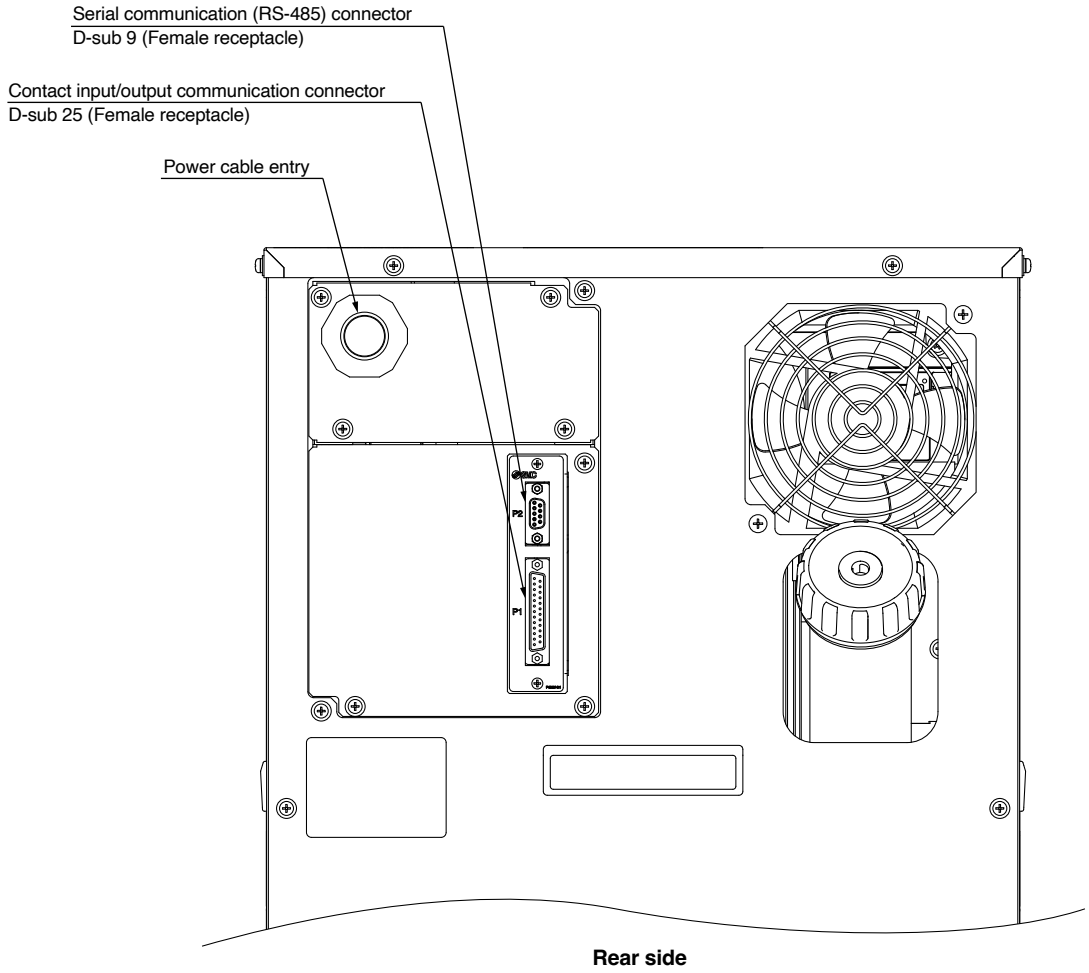

Rear side

Operation Display Panel

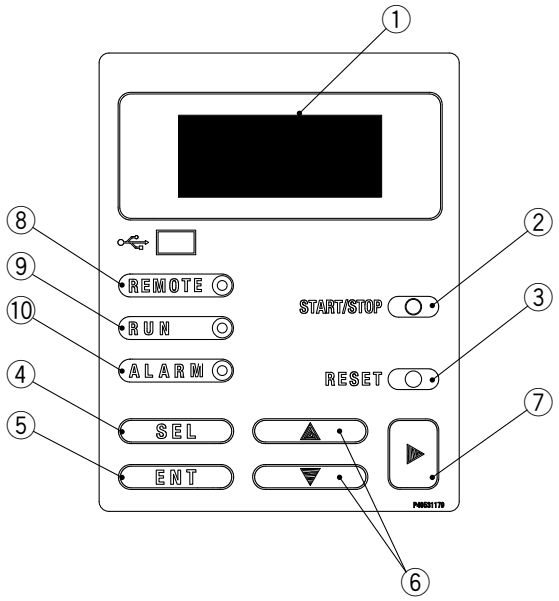

No.	Description	Function
①	**LCD**	Operating condition of this unit/Circulating fluid discharge temperature/Circulating fluid flow/ Circulating fluid discharge pressure/Setting value/Alarm message, etc. are displayed.
②	**[START/STOP] key**	Starts/Stops the operation.
③	**[RESET] key**	Stops the alarm buzzing. Resets the alarm.
④	**[SEL] key**	Switches the display.
⑤	**[ENT] key**	Decides the settings.
⑥	**[▲] [▼] key**	Moves the cursor and changes the setting values.
⑦	**[▶] key**	Moves the cursor.
⑧	**[REMOTE] lamp**	Lights up when the unit is in the remote status.
⑨	**[RUN] lamp**	Lights up when the unit is in the operating status.
⑩	**[ALARM] lamp**	Lights up when the unit is alarming.

Alarm

This unit can display 24 kinds of alarm messages as standard. Also, it can read out the serial RS-485 communication.

Alarm code	Alarm message	Operation status	Main reason
01	Water Leak Detect FLT	Stop	Liquid deposits in the base of this unit.
02*2	Incorrect Phase Error FLT	Stop	The power supply to this unit is incorrect.
03	RFGT High Press FLT	Stop	Pressure in the refrigeration circuit has exceeded the limitation.
04	CPRSR Overheat FLT	Stop	Temperature inside the compressor has increased.
05	Reservoir Low Level FLT	Stop	The amount of circulating fluid is running low.
06	Reservoir Low Level WRN	Continue	The amount of circulating fluid is running low.
07	Reservoir High Level WRN	Continue	Filling the circulating fluid too much.
08	Temp. Fuse Cutout FLT	Stop	Temperature of the circulating fluid tank is raised.
09	Reservoir High Temp. FLT	Stop	Temperature of the circulating fluid has exceeded the limitation.
10	Return High Temp. WRN	Continue	Temperature of returning circulating fluid has exceeded the limit.
11	Reservoir High Temp. WRN	Continue	Temperature of the circulating fluid has exceeded the limitation set by user.
12	Return Low Flow FLT	Stop	The circulating fluid flow has gone below 6 l/min.
13	Return Low Flow WRN	Continue	The circulating fluid flow has gone below the limitation set by user.
16*2	CPRSR Breaker Trip FLT	Stop	Protection device for the electric circuit of the compressor is activated.
19	FAN Motor Stop WRN	Continue	Cooling fan inside the compressor has stopped.
20	Internal Pump Time Out WRN	Continue	The internal pump continuously run for more than a certain period of time.
21	Controller Error FLT	Stop	The error occurred in the control systems.
22	Memory Data Error FLT	Stop	The data stored in the controller of this unit went wrong.
23*4	Communication Error	Continue/Stop	The serial communications between this unit and user's system has been suspended.
24*1	DI Low Level WRN	Continue	DI level of the circulating fluid has gone below the limitation set by user.
25	Pump Inverter Error FLT	Stop	An error has occurred in the inverter for the circulating pump.
28*3	CPRSR INV Error FLT	Stop	An error has occurred in the inverter for the compressor.
29	RFGT Low Press FLT	Stop	The refrigerant pressure has gone below the limitation.
32	Reservoir Low Temp. WRN	Continue	The temperature for circulating fluid return has gone below the limitation set by the user.

*1 Only for the DI control kit (option Y) specification
*2 HRZ008-L/L1-F only
*3 Excluding HRZ008-L/L1-F
*4 Continue or stop can be selected.

Optional Accessories

① Bypass Piping Set

∗ Necessary to be fitted by user.

When the circulating fluid goes below the rated flow, cooling capacity will be reduced and the temperature stability will be badly affected.
In such a case, use the bypass piping set.

Part no.	Applicable model
HRZ-BP002	HRZ002-WS-F/HRZ002-W1S-F/HRZ002-W2S-F HRZ004-WS-F/HRZ004-W1S-F/HRZ004-W2S-F HRZ008-WS-F/HRZ008-W1S-F/HRZ008-W2S-F HRZ010-WS-F/HRZ010-W1S-F/HRZ010-W2S-F
HRZ-BP008	HRZ008-L-F/HRZ008-L1-F

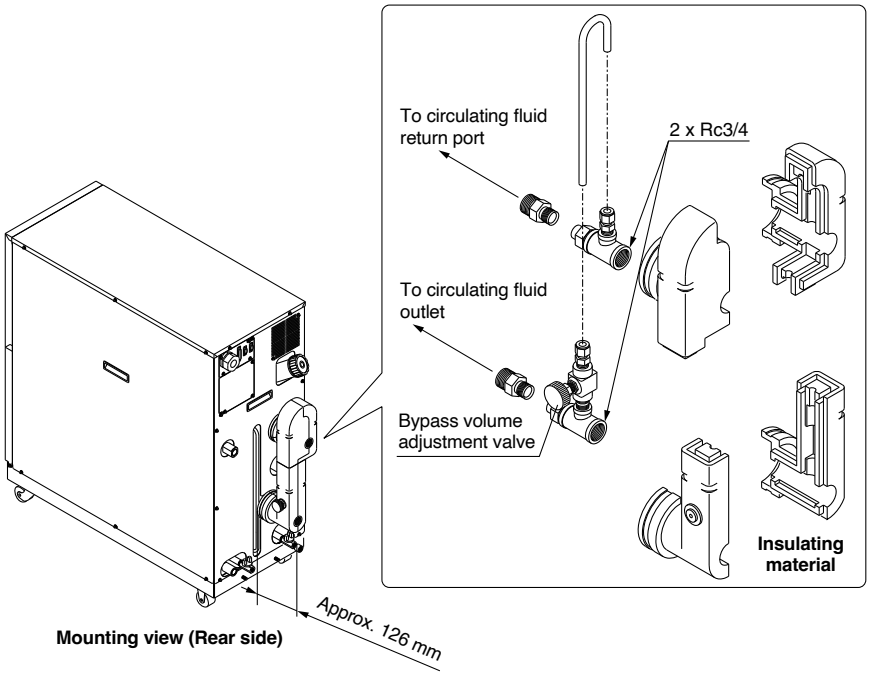

② Anti-quake Bracket

Bracket for earthquakes
Prepare the anchor bolts (M12) which are suited to the floor material by user.

Part no.	Applicable model
HRZ-TK002	HRZ002-WS-F/HRZ002-W1S-F/HRZ002-W2S-F HRZ004-WS-F/HRZ004-W1S-F/HRZ004-W2S-F HRZ008-WS-F/HRZ008-W1S-F/HRZ008-W2S-F HRZ010-WS-F/HRZ010-W1S-F/HRZ010-W2S-F

∗ 2 pieces per set (for 1 unit) (HRZ-TK002)
∗ Anti-quake bracket is attached as standard. (HRZ008-L-F, HRZ008-L1-F)

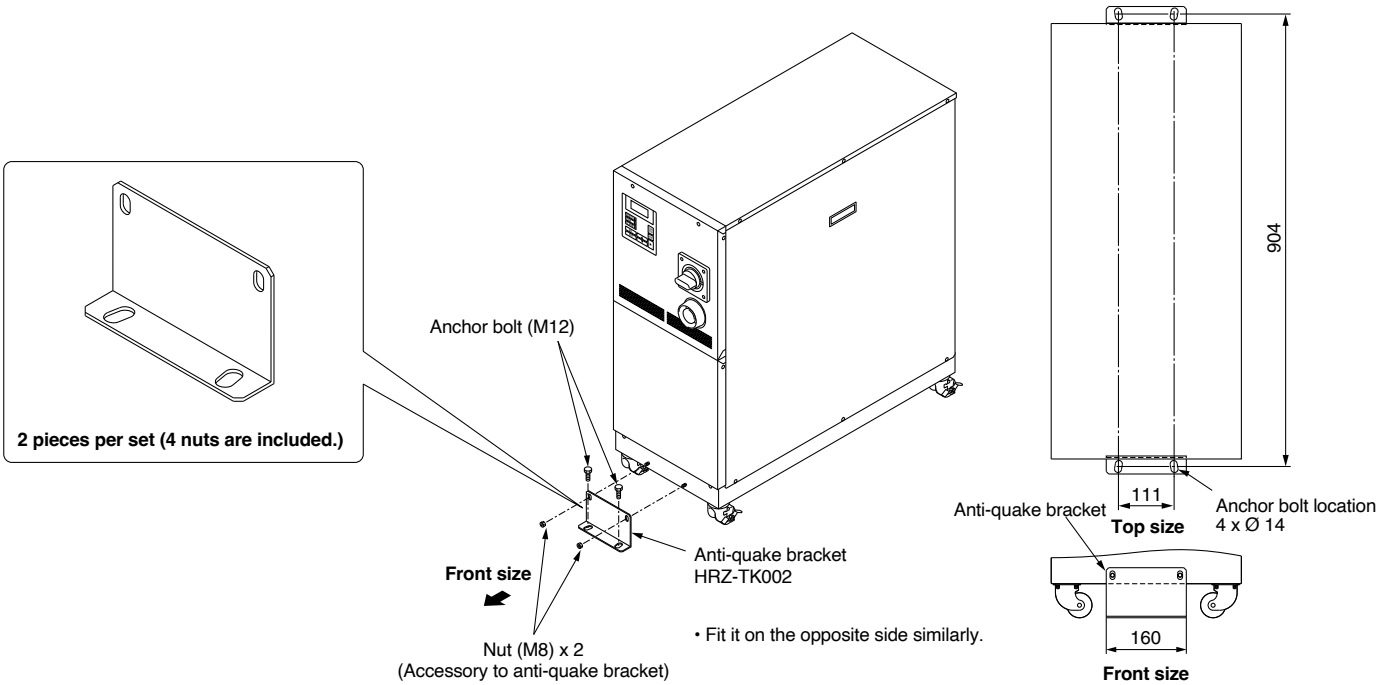

③ 4-Port Manifold

4-branching the circulating fluid enables 4 temperature controls at the maximum with the 1 unit thermo-chiller.

Part no.	Applicable model
HRZ-MA001	Common for all models

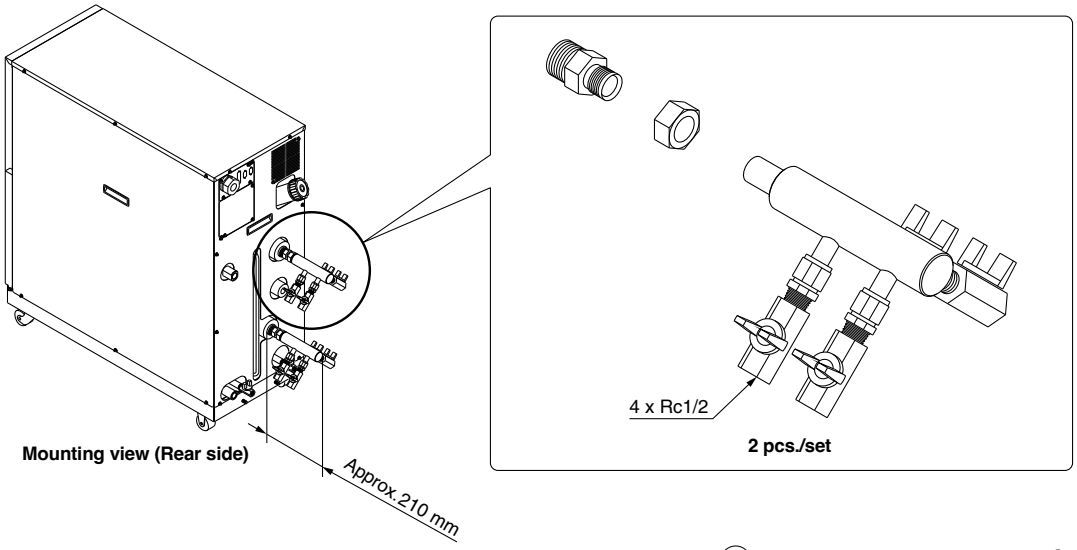

④ DI Filter

This is the ion replacement resin to maintain the electric resistivity of the circulating fluid.
Users who selected the DI control kit (option Y) need to purchase the DI filter separately.

Part no.	Applicable model
HRZ-DF001	Common for all models which can select the DI control kit. (option Y)

∗ The DI filters are consumable. Depending on the status (electric resistivity set value, circulating fluid temperature, piping volume, etc.), product life cycles will vary accordingly.

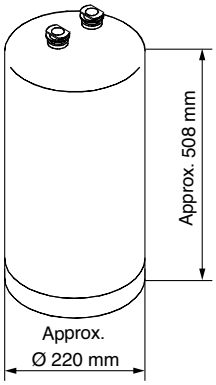

Weight: Approx. 20 kg

⑤ Insulating Material for DI Filter

When the DI filter is used at a high-temperature, we recommend that you use this insulating material to protect the radiated heat from the DI filter or possible burns. When the DI filter is used at a low-temperature, we also recommend that you use this to prevent heat absorption from the DI filter and to avoid forming condensation.

Part no.	Applicable model
HRZ-DF002	Common for all models which can select the DI control kit. (option Y)

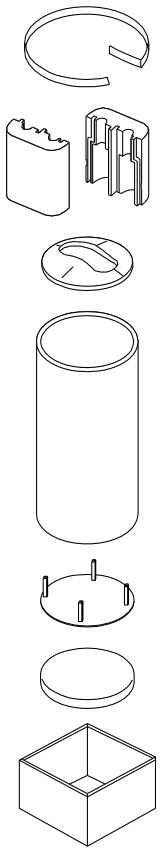

⑥ 60 % Ethylene Glycol Aqueous Solution

This solution can be used as a circulating fluid for ethylene glycol-type thermo-chillers. (Capacity: 10 L)

Part no.	Applicable model
HRZ-BR001	Common for all ethylene glycol-type models

This product is for use and sale in Japan only. (Documents such as Safety Data Sheets for products outside of Japan are not available.)

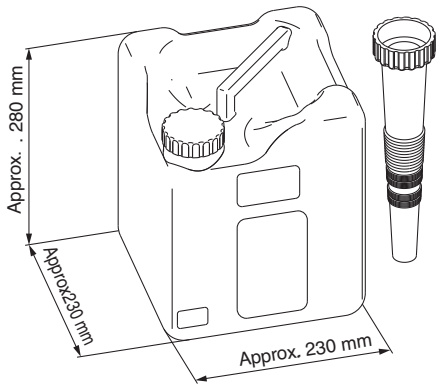

⑦ Concentration Meter

This meter can be used to control the condensation of ethylene glycol solution regularly.

Part no.	Applicable model
HRZ-BR002	Common for all ethylene glycol-type models

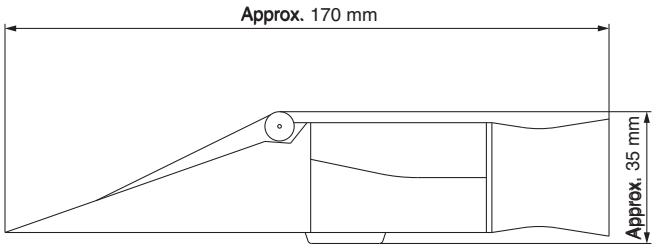

HRZ-F Series
Options

∗ **Options have to be selected when ordering the thermo-chiller. It is not possible to add them after purchasing the unit.**

C Option symbol
Analogue Communication

HRZ□□□□-□□-C F

Analogue communication

In addition to the standard contact input/output signal communication and the serial RS-485 communication, analogue communication function can be added.
The analogue communication function enables to write and read out the following items.

<Writing>
Circulating fluid temperature setting

<Readout>
Circulating fluid present temperature
Electric resistivity∗1

∗1 Only when the DI control kit (option Y) is selected.

Scaling voltage - circulating fluid temperature can be set arbitrarily by user.
For details, please refer to our “Communication Specifications” information.

D Option symbol
DeviceNet Communication

HRZ□□□□-□□-D F

DeviceNet communication

DeviceNet®

■ **Trademark**
DeviceNet® is a registered trademark of ODVA, Inc.

In addition to the standard contact input/output signal communication and the serial RS-485 communication, DeviceNet function can be added.
DeviceNet function enables to write and read out the following items.

<Writing>
Run/Stop
Circulating fluid temperature setting
Circulating fluid automatic recovery start/stop∗1

<Readout>
Circulating fluid present temperature
Circulating fluid flow
Circulating fluid discharge pressure
Electric resistivity∗2
Alarm occurrence information
Status (operating condition) information

∗1 Only when the circulating fluid automatic recovery function (option Z) is selected.
∗2 Only when the DI control kit (option Y) is selected.

For details, please refer to our “Communication Specifications” information.

N Option symbol
NPT Fitting

HRZ□□□□-□□-F N

NPT fitting

An adapter is included to change the connection parts of circulating fluid piping and facility water piping to NPT thread type. The adapter must be installed by user.

W Option symbol
SI Unit Only

HRZ□□□□-□□-F W

SI unit only

The circulating fluid temperature and pressure are displayed in SI units [MPa/°C] only.
If this option is not selected, a product with a unit selection function will be provided by default.
∗ No change in external dimensions

Y Option symbol
DI Control Kit

HRZ□□□□-□□-F Y

DI control kit

Select this option if you want to maintain the electric resistance ratio (DI level) of the circulating fluid at a certain level. However, some components have to be fitted by user. For details, refer to specification table for this option.
Please note that this is not applicable to the fluorinated liquid type.

Applicable model		HRZ00□-W1S-FY HRZ010-W1S-FY HRZ008-L1-FY	HRZ00□-W2S-FY HRZ010-W2S-FY
Allowable circulating fluid	—	60 % ethylene glycol aqueous solution	Deionised water
DI level display range	MΩ·cm	0 to 20	
DI level set range	MΩ·cm	0 to 2.0∗1	
DI level reduction alarm set range	MΩ·cm	0 to 2.0	

∗1 The DI filter is needed to control the DI level. (SMC Part No.: HRZ-DF001)
Please purchase additionally because the DI filter is not included in this option. Also, if necessary, additionally purchase the insulating material for the DI filter. (SMC Part No.: HRZ-DF002)

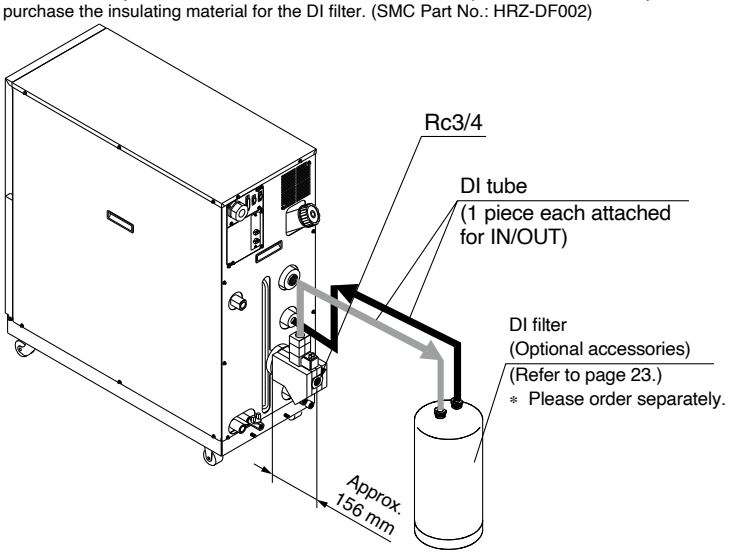

∗ Install the DI filter outside the thermo-chiller for piping. Secure the space for installing the DI filter on the rear side of the thermo-chiller.
∗ It may go outside of the temperature stability range of ±0.1 °C when this option is used in some operating conditions.

Z Option symbol

Circulating Fluid Automatic Recovery

HRZ□□□□–□□– F Z

Circulating fluid automatic recovery

Select this option for users who want to use the circulating fluid automatic recovery function.
The automatic recovery function is a device which can recover the circulating fluid inside pipings into a sub-tank of the thermo-chiller by the external communication or operating display panel. Some components need to be fitted by user. For details, please refer to the “Product Specifications” information for these options.

Applicable model		HRZ002-WS-FZ/HRZ002-W1S-FZ/HRZ002-W2S-FZ HRZ004-WS-FZ/HRZ004-W1S-FZ/HRZ004-W2S-FZ HRZ008-WS-FZ/HRZ008-W1S-FZ/HRZ008-W2S-FZ HRZ010-WS-FZ/HRZ010-W1S-FZ/HRZ010-W2S-FZ	HRZ008-L-FZ HRZ008-L1-FZ
Circulating fluid recoverable volume*1	L	16	17
Purge gas	—	Nitrogen gas	
Purge gas supply port	—	Self-align fitting for O.D. Ø 8*2	
Purge gas supply pressure	MPa	0.4 to 0.7	
Purge gas filtration	μm	0.01 or less	
Regulator set pressure	MPa	0.15 to 0.3*3	
Recoverable circulating fluid temperature	°C	10 to 30	
Recovery start/stop	—	Start: External communication*4 or operation display panel/Stop: Automatic	
Timeout error	sec	Timer from recovery start to completion Stops recovering when the timer turns to set time. Possible set range: 60 to 300, at the time of shipping from the factory: 300	
Height difference with the user’s system side	m	10 or less	

*1 This is the space volume of the sub-tank when the liquid level of the circulating fluid is within the specification. Guideline of the recovery volume is 80 % of the circulating fluid recoverable volume.
*2 Before piping, clean inside the pipings with air blow, etc. Use the piping with no dust generation by purge gas. When using resin tube, where necessary, use insert fittings, etc. in order not to deform the tubings when connecting to self-align fittings.
*3 At the time of shipping from factory, it is set to 0.2 MPa.
*4 For details, please refer to our “Communication Specifications” information.

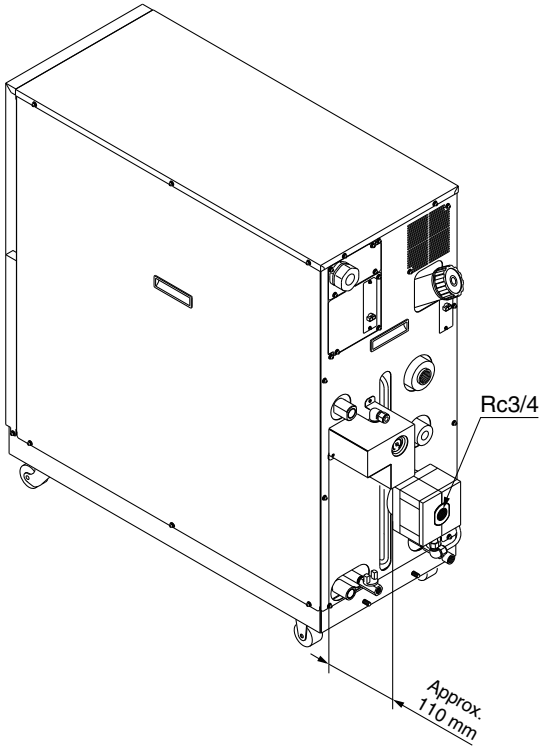

HRZ-F Series
Specific Product Precautions 1

Be sure to read this before handling the products. Refer to the back cover for safety instructions. For temperature control equipment precautions, refer to the "Handling Precautions for SMC Products" and the "Operation Manual" on the SMC website: https://www.smc.eu

Design

⚠ Warning

1. This catalogue shows the specifications of a single unit.

1. For details, please refer to our "Product Specifications" and thoroughly consider the adaptability between the user's system and this unit.
2. Although a protection circuit as a single unit is installed, the user is requested to carry out a safety design for the whole system.

Selection

⚠ Caution

1. Model selection

In order to select the correct thermo-chiller model, the amount of thermal generation from the user's system, the operating circulating fluid, and its circulating flow are required. Select a model, by referring to the guideline to model selection on page 7.

2. Option selection

Options have to be selected when ordering the thermo-chiller. It is not possible to add them after purchasing the unit.

Handling

⚠ Warning

1. Thoroughly read the operation manual.

Read the operation manual completely before operation, and keep the manual where it can be referred to as necessary.

Operating Environment / Storage Environment

⚠ Caution

1. Do not use in the following environment because it will lead to a breakdown.

1. Environment like written in "Temperature Control Equipment Precautions."
2. Locations where spatter will adhere to when welding.
3. Locations where it is likely that the leakage of flammable gas may occur.
4. Locations where the ambient temperature exceeds the limits as mentioned below.
   During operation 10 °C to 35 °C
   During storage 0 °C to 50 °C (but as long as water or circulating fluid are not left inside the pipings)
5. Locations where the ambient relative humidity exceeds the limit as mentioned below.
   During operation 30 % to 70 %
   During storage 15 % to 85 %
6. (Inside the operation facilities) locations where there is not sufficient space for maintenance.
7. In locations where the ambient pressure exceeds the atmospheric pressure.

2. The Thermo-chiller does not have clean room specification. It generates dust from the pump inside the unit and the cooling fan for the unit inside.

Circulating Fluid

⚠ Caution

1. Avoid oil or other foreign matter entering the circulating fluid.

2. Use ethylene glycol that does not contain additives such as preservatives.

3. The condensation of ethylene glycol aqueous solution must be 60 % or less. If the density is too high, the pump will be overloaded, resulting in occurrence of "Pump Breaker Trip FLT." Also, if the density is to low, the unit will freeze at lower temperatures, resulting in product failure.

4. Avoid water moisture entering the fluorinated fluid. Otherwise, the unit will freeze, resulting in product failure.

5. Use water (including for diluting ethylene glycol aqueous solution) which must meet the water quality standards as mentioned below.

Water (as Circulating Water) Quality Standards

SMC recommends satisfying the water quality standards of the Japan Refrigeration and Air Conditioning Industry Association (JRA GL-02-1994 / Cooling water system - Recirculation type - Make-up water)

	Item	Unit	Standard value	Influence	
				Corrosion	Scale generation
Standard item	pH (at 25 °C)	—	6.0 to 8.0	○	○
	Electric conductivity (25 °C)	[μS/cm]	100*1 to 300*1	○	○
	Chloride ion (Cl^-)	[mg/L]	50 or less	○	
	Sulfuric acid ion (SO_4^{2-})	[mg/L]	50 or less	○	
	Acid consumption amount (at pH4.8)	[mg/L]	50 or less		○
	Total hardness	[mg/L]	70 or less		○
	Calcium hardness ($CaCO_3$)	[mg/L]	50 or less		○
	Ionic state silica (SiO_2)	[mg/L]	30 or less		○
Reference item	Iron (Fe)	[mg/L]	0.3 or less	○	○
	Copper (Cu)	[mg/L]	0.1 or less	○	
	Sulfide ion (S_2^-)	[mg/L]	Should not be detected.	○	
	Ammonium ion (NH_4^+)	[mg/L]	0.1 or less	○	
	Residual chlorine (Cl)	[mg/L]	0.3 or less	○	
	Free carbon (CO_2)	[mg/L]	4.0 or less	○	

*1 In the case of [MΩ·cm], it will be 0.003 to 0.01.

- ○: Factors that have an effect on corrosion or scale generation.
- Even if the water quality standards are met, complete prevention of corrosion is not guaranteed.

HRZ-F Series
Specific Product Precautions 2

Be sure to read this before handling the products. Refer to the back cover for safety instructions. For temperature control equipment precautions, refer to the "Handling Precautions for SMC Products" and the "Operation Manual" on the SMC website: https://www.smc.eu

Facility Water Supply

⚠ Warning

<Water-cooled refrigeration>

1. The water-cooled refrigeration type thermo-chiller radiates heat to the facility water.

Prepare the facility water system that satisfies the facility water specifications below.

2. When using tap water as facility water, SMC recommends the water quality shown in the following table as reference.

<Tap Water (as Facility Water) Quality Standards>

The Japan Refrigeration and Air Conditioning Industry Association
JRA GL-02-1994 "Cooling water system – Circulation type – Circulating water"

	Item	Unit	Standard value	Influence	
				Corrosion	Scale generation
Standard item	pH (at 25 °C)	—	6.5 to 8.2	○	○
	Electric conductivity (25 °C)	[μS/cm]	100*1 to 800*1	○	○
	Chloride ion (Cl^-)	[mg/L]	200 or less	○	
	Sulfuric acid ion (SO_4^{2-})	[mg/L]	200 or less	○	
	Acid consumption amount (at pH4.8)	[mg/L]	100 or less		○
	Total hardness	[mg/L]	200 or less		○
	Calcium hardness ($CaCO_3$)	[mg/L]	150 or less		○
	Ionic state silica (SiO_2)	[mg/L]	50 or less		○
Reference item	Iron (Fe)	[mg/L]	1.0 or less	○	○
	Copper (Cu)	[mg/L]	0.3 or less	○	
	Sulfide ion (S_2^-)	[mg/L]	Should not be detected.	○	
	Ammonium ion (NH_4^+)	[mg/L]	1.0 or less	○	
	Residual chlorine (Cl)	[mg/L]	0.3 or less	○	
	Free carbon (CO_2)	[mg/L]	4.0 or less	○	

*1 In the case of [MΩ·cm], it will be 0.001 to 0.01.
- ○: Factors that have an effect on corrosion or scale generation.
- Even if the water quality standards are met, complete prevention of corrosion is not guaranteed.

3. Set the supply pressure between 0.3 to 0.7 MPa. Ensure a pressure difference at the facility water inlet/outlet of 0.3 MPa or more.

If the supply pressure is high, it will cause water leakage. If the supply pressure and pressure difference at the facility water inlet/outlet is low, it will cause an insufficient flow rate of the facility water, and poor temperature control.

Transportation / Carriage / Movement

⚠ Warning

1. Transporting with forklift

1. It is not possible to hang this product.
2. The fork insertion position is either on the left side face or right side face of the unit. Be careful not to bump the fork against a caster or level foot and be sure to put through the fork to the opposite side.
3. Be careful not to bump the fork to the cover panel or piping ports.

2. Transporting with casters

1. This product is heavy and should be moved by at least two people.
2. Do not grip the pipings on the rear side or the handles of the panel.

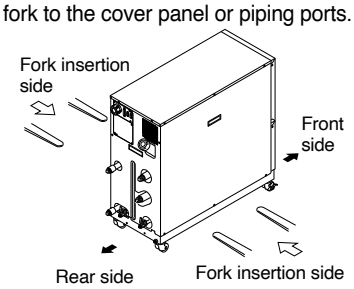

Mounting / Installation

⚠ Caution

1. Avoid using this product outdoors.

2. Install on a rigid floor which can withstand this product's weight.

3. Install a suitable anchor bolt for the anti-quake bracket taking into consideration the user's floor material.

4. Avoid placing heavy objects on this product.

Piping

⚠ Caution

1. The circulating fluid and facility water piping should be prepared by user with consideration of the operating pressure, temperature, and circulating fluid/facility compatibility.

If the operating performance is not sufficient, the pipings may burst during operation. Also, the use of corrosive materials such as aluminium or iron for fluid contact parts, such as piping, may not only lead to clogging or leakage in the circulating fluid and facility water circuits but also refrigerant leakage and other unexpected problems. Provide protection against corrosion when you use the product.

2. The surface of the circulating fluid pipings should be covered with the insulating materials which can effectively confine the heat.

Absorbing the heat from the surface of pipings may reduce the cooling capacity performance and the heating capacity may be shortened due to heat radiation.

3. When using fluorinated liquid as the circulating fluid, do not use pipe tape.

Liquid leakage may occur around the pipe tape.
For sealant, we recommend that you use the following sealant: SMC Part No., HRZ-S0003 (Silicone sealant)

4. For the circulating fluid pipings, use clean pipings which have no dust, oil or water moisture inside the pipings, and blow with air prior to undertaking any piping works.

If any dust, oil or water moisture enters the circulating fluid circuit, inferior cooling performance or equipment failure due to frozen water may occur, resulting in bubbles in the circulating fluid inside the tank.

5. The reciprocating total volume of the circulating fluid pipings must be less than the volume of the sub-tank.

Otherwise, when the equipment is stopped, the in-built alarm may activate or the circulating fluid may leak from the tank. Refer to the specifications table for the sub-tank volume.

6. Select the circulating fluid pipings which can exceed the required rated flow.

For the rated flow, refer to the pump capacity table.

7. For the circulating fluid piping connection, install a drain pan just in case the circulating fluid may leak.

8. Do not return the circulating fluid to the unit by installing a pump in the user's system.

9. The facility water flow rate is adjusted automatically according to the operating conditions. In addition, the facility water return temperature is 60 °C at maximum.

HRZ-F Series
Specific Product Precautions 3

Be sure to read this before handling the products. Refer to the back cover for safety instructions. For temperature control equipment precautions, refer to the "Handling Precautions for SMC Products" and the "Operation Manual" on the SMC website: https://www.smc.eu

Electrical Wiring

⚠ Caution

1. Power supply and signal cable should be prepared by user.

2. Provide a stable power supply which is not affected by surge or distortion.

If the voltage increase ratio (dV/dt) at the zero cross should exceed 40 V/200 μsec., it may result in a malfunction.

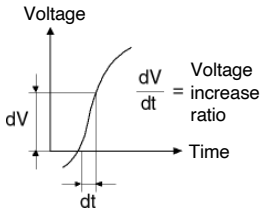

3. This product is installed with a breaker with the following operating characteristics.

For the user's equipment (inlet side), use a breaker whose operating time is equal to or longer than the breaker of this product. If a breaker with shorter operating time is connected, the user's equipment could be cut off due to the inrush current of the motor of this product.

Breaker Operating Characteristics

Applicable model

HRZ002-WS-F
HRZ002-W1S-F
HRZ002-W2S-F
HRZ004-WS-F
HRZ004-W1S-F
HRZ004-W2S-F
HRZ008-WS-F
HRZ008-W1S-F
HRZ008-W2S-F

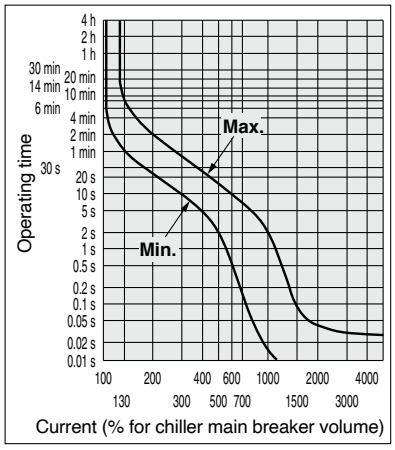

HRZ008-L-F
HRZ008-L1-F
HRZ010-WS-F
HRZ010-W1S-F
HRZ010-W2S-F

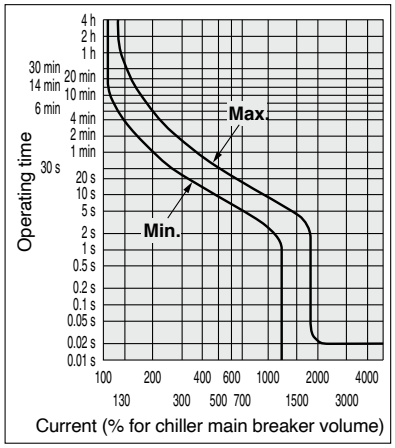

Operation

⚠ Caution

1. Confirmation before operation

1. The circulating fluid should be within the specified range of "HIGH" and "LOW."
2. Be sure to tighten the cap for the circulating fluid port until the click sound is heard.

2. Emergency stop method

In the case of an emergency, press down the EMO switch which is fitted on the front face of this product.

Operation Restart Time / Operation and Suspension Frequency

⚠ Caution

1. Wait five minutes or more before restarting operation after it has been stopped. If the operation is restarted within five minutes, the protection circuit may activate and the operation may not start properly.

2. Operation and suspension frequency should not exceed 10 times per day. Frequently switching between operation and suspension may result in the malfunction of the refrigeration circuit.

Maintenance

⚠ Warning

1. Do not operate the switch with wet hands or touch electrical parts such as an electrical plug. This will lead to an electrical shock.

2. Do not splash water directly on this product for cleaning. This will lead to an electrical shock or a fire.

3. When the panel was removed for the purpose of inspection or cleaning, mount the panel after works were done.

If the panel is still open, or running the equipment with the panel removed, it may cause an injury or electric shock.

⚠ Caution

1. In order to prevent a sudden product failure of the unit, replace the replacement parts every 36 months.

2. Perform an inspection of the circulating fluid every 3 months.

1. In the case of fluorinated fluids:
   Discharge the circulating liquid and avoid any dirty objects, or water moisture, or foreign matter entering the system.
2. In the case of ethylene glycol aqueous solution:
   Maintain the condensation at 60 %.
3. In the case of tap water/deionised water:
   Replacement is recommended.

3. Check the water quality of cooling water every 3 months.

Regarding the water quality standards for cooling water, refer to "Temperature Control Equipment Precautions."

Specific Product Precautions 4

Be sure to read this before handling the products. Refer to the back cover for safety instructions. For temperature control equipment precautions, refer to the "Handling Precautions for SMC Products" and the "Operation Manual" on the SMC website: https://www.smc.eu

■ Refrigerant with GWP Reference

Refrigerant	Global Warming Potential (GWP)			
	Regulation (EU) 2024/573	AIM Act 40 CFR Part 84	Fluorocarbon Emissions Control Act (Japan)	
			GWP value labeled on products	GWP value to be used for reporting the calculated amount of leakage
R134a	1,430		1,430	1,300
R404A	3,922		3,920	3,940
R407C	1,774		1,770	1,620
R410A	2,088		2,090	1,920
R448A	1,386		1,390	1,270
R454C	146		145	146
R32	675		675	677
R1234yf	0.501	1	—	—

∗ This product is hermetically sealed and contains fluorinated greenhouse gases (HFC/HFO). When this product is sold on the market in the EU after January 1, 2017, it needs to be compliant with the quota system of the F-Gas Regulation in the EU.

∗ See specification table for refrigerant used in the product.

⚠ Safety Instructions

These safety instructions are intended to prevent hazardous situations and/or equipment damage. These instructions indicate the level of potential hazard with the labels of **"Caution," "Warning"** or **"Danger."** They are all important notes for safety and must be followed in addition to International Standards (ISO/IEC) [1], and other safety regulations.

⚠ **Caution:**	**Caution** indicates a hazard with a low level of risk which, if not avoided, could result in minor or moderate injury.
⚠ **Warning:**	**Warning** indicates a hazard with a medium level of risk which, if not avoided, could result in death or serious injury.
⚠ **Danger:**	**Danger** indicates a hazard with a high level of risk which, if not avoided, will result in death or serious injury.

1) ISO 4414: Pneumatic fluid power – General rules relating to systems.
ISO 4413: Hydraulic fluid power – General rules relating to systems.
IEC 60204-1: Safety of machinery – Electrical equipment of machines. (Part 1: General requirements)
ISO 10218-1: Manipulating industrial robots - Safety.
etc.

⚠ Warning

1. The compatibility of the product is the responsibility of the person who designs the equipment or decides its specifications.
Since the product specified here is used under various operating conditions, its compatibility with specific equipment must be decided by the person who designs the equipment or decides its specifications based on necessary analysis and test results. The expected performance and safety assurance of the equipment will be the responsibility of the person who has determined its compatibility with the product. This person should also continuously review all specifications of the product referring to its latest catalogue information, with a view to giving due consideration to any possibility of equipment failure when configuring the equipment.

2. Only personnel with appropriate training should operate machinery and equipment.
The product specified here may become unsafe if handled incorrectly. The assembly, operation and maintenance of machines or equipment including our products must be performed by an operator who is appropriately trained and experienced.

3. Do not service or attempt to remove product and machinery/ equipment until safety is confirmed.
1. The inspection and maintenance of machinery/equipment should only be performed after measures to prevent falling or runaway of the driven objects have been confirmed.
2. When the product is to be removed, confirm that the safety measures as mentioned above are implemented and the power from any appropriate source is cut, and read and understand the specific product precautions of all relevant products carefully.
3. Before machinery/equipment is restarted, take measures to prevent unexpected operation and malfunction.

4. Contact SMC beforehand and take special consideration of safety measures if the product is to be used in any of the following conditions.
1. Conditions and environments outside of the given specifications, or use outdoors or in a place exposed to direct sunlight.
2. Installation on equipment in conjunction with atomic energy, railways, air navigation, space, shipping, vehicles, military, medical treatment, combustion and recreation, or equipment in contact with food and beverages, emergency stop circuits, clutch and brake circuits in press applications, safety equipment or other applications unsuitable for the standard specifications described in the product catalogue.
3. An application which could have negative effects on people, property, or animals requiring special safety analysis.
4. Use in an interlock circuit, which requires the provision of double interlock for possible failure by using a mechanical protective function, and periodical checks to confirm proper operation.

⚠ Caution

1. The product is provided for use in manufacturing industries.
The product herein described is basically provided for peaceful use in manufacturing industries.
If considering using the product in other industries, consult SMC beforehand and exchange specifications or a contract if necessary.
If anything is unclear, contact your nearest sales branch.

Limited warranty and Disclaimer/Compliance Requirements

The product used is subject to the following "Limited warranty and Disclaimer" and "Compliance Requirements".Read and accept them before using the product.

Limited warranty and Disclaimer

1. The warranty period of the product is 1 year in service or 1.5 years after the product is delivered, whichever is first. [2] Also, the product may have specified durability, running distance or replacement parts. Please consult your nearest sales branch.
2. For any failure or damage reported within the warranty period which is clearly our responsibility, a replacement product or necessary parts will be provided. This limited warranty applies only to our product independently, and not to any other damage incurred due to the failure of the product.
3. Prior to using SMC products, please read and understand the warranty terms and disclaimers noted in the specified catalogue for the particular products.

2) Vacuum pads are excluded from this 1 year warranty.
A vacuum pad is a consumable part, so it is warranted for a year after it is delivered. Also, even within the warranty period, the wear of a product due to the use of the vacuum pad or failure due to the deterioration of rubber material are not covered by the limited warranty.

Compliance Requirements

1. The use of SMC products with production equipment for the manufacture of weapons of mass destruction (WMD) or any other weapon is strictly prohibited.
2. The exports of SMC products or technology from one country to another are governed by the relevant security laws and regulations of the countries involved in the transaction. Prior to the shipment of a SMC product to another country, assure that all local rules governing that export are known and followed.

⚠ Caution

SMC products are not intended for use as instruments for legal metrology.
Measurement instruments that SMC manufactures or sells have not been qualified by type approval tests relevant to the metrology (measurement) laws of each country.
Therefore, SMC products cannot be used for business or certification ordained by the metrology (measurement) laws of each country.

SMC Corporation (Europe)

Austria	+43 (0)2262622800	www.smc.at	office@smc.at
Belgium	+32 (0)33551464	www.smc.be	info@smc.be
Bulgaria	+359 (0)2807670	www.smc.bg	office@smc.bg
Croatia	+385 (0)13707288	www.smc.hr	office@smc.hr
Czech Republic	+420 541424611	www.smc.cz	office@smc.cz
Denmark	+45 70252900	www.smcdk.com	smc@smcdk.com
Estonia	+372 6510370	www.smcpneumatics.ee	smc@info@smcee.ee
Finland	+358 207513513	www.smc.fi	smcfi@smc.fi
France	+33 (0)164761000	www.smc-france.fr	info@smc-france.fr
Germany	+49 (0)61034020	www.smc.de	info@smc.de
Greece	+30 210 2717265	www.smchellas.gr	sales@smchellas.gr
Hungary	+36 23513000	www.smc.hu	office@smc.hu
Ireland	+353 (0)14039000	www.smcautomation.ie	sales@smcautomation.ie
Italy	+39 03990691	www.smcitalia.it	mailbox@smcitalia.it
Latvia	+371 67817700	www.smc.lv	info@smc.lv
Lithuania	+370 5 2308118	www.smclt.lt	info@smclt.lt
Netherlands	+31 (0)205318888	www.smc.nl	info@smc.nl
Norway	+47 67129020	www.smc-norge.no	post@smc-norge.no
Poland	+48 222119600	www.smc.pl	office@smc.pl
Portugal	+351 214724500	www.smc.eu	apoioclientept@smc.smces.es
Romania	+40 213205111	www.smcromania.ro	smcromania@smcromania.ro
Russia	+7 8127185445	www.smc-pneumatik.ru	info@smc-pneumatik.ru
Slovakia	+421 (0)413213212	www.smc.sk	office@smc.sk
Slovenia	+386 (0)73885412	www.smc.si	office@smc.si
Spain	+34 945184100	www.smc.eu	post@smc.smces.es
Sweden	+46 (0)86031240	www.smc.nu	smc@smc.nu
Switzerland	+41 (0)523963131	www.smc.ch	info@smc.ch
Turkey	+90 212 489 0 440	www.smcpnomatik.com.tr	info@smcpnomatik.com.tr
UK	+44 (0)845 121 5122	www.smc.uk	sales@smc.uk
South Africa	+27 10 900 1233	www.smcza.co.za	zasales@smcza.co.za

Printing ZS 00 Printed in Spain

Specifications are subject to change without prior notice and any obligation on the part of the manufacturer

SMC Corporation (Europe)

Austria	+43 (0)2262622800	www.smc.at	office.at@smc.com
Belgium	+32 (0)33551464	www.smc.be	info@smc.be
Bulgaria	+359 (0)2807670	www.smc.bg	sales.bg@smc.com
Croatia	+385 (0)13707288	www.smc.hr	sales.hr@smc.com
Czech Republic	+420 541424611	www.smc.cz	office.at@smc.com
Denmark	+45 70252900	www.smcdk.com	smc.dk@smc.com
Estonia	+372 651 0370	www.smcee.ee	info.ee@smc.com
Finland	+358 207513513	www.smc.fi	smc.fi@smc.com
France	+33 (0)164761000	www.smc-france.fr	supportclient.fr@smc.com
Germany	+49 (0)61034020	www.smc.de	info.de@smc.com
Greece	+30 210 2717265	www.smchellas.gr	sales@smchellas.gr
Hungary	+36 23513000	www.smc.hu	office.hu@smc.com
Ireland	+353 (0)14039000	www.smcautomation.ie	technical.ie@smc.com
Italy	+39 03990691	www.smcitalia.it	mailbox.it@smc.com
Latvia	+371 67817700	www.smc.lv	info.lv@smc.com
Lithuania	+370 5 2308118	www.smclt.lt	info.lt@smc.com
Netherlands	+31 (0)205318888	www.smc.nl	info@smc.nl
Norway	+47 67129020	www.smc-norge.no	post.no@smc.com
Poland	+48 22 344 40 00	www.smc.pl	office.pl@smc.com
Portugal	+351 214724500	www.smc.eu	apoiocliente.pt@smc.com
Romania	+40 213205111	www.smcromania.ro	office.ro@smc.com
Russia	+7 (812)3036600	www.smc.eu	sales@smcru.com
Slovakia	+421 (0)413213212	www.smc.sk	sales.sk@smc.com
Slovenia	+386 (0)73885412	www.smc.si	office.si@smc.com
Spain	+34 945184100	www.smc.eu	post.es@smc.com
Sweden	+46 (0)86031240	www.smc.nu	order.se@smc.com
Switzerland	+41 (0)523963131	www.smc.ch	helpcenter.ch@smc.com
Turkey	+90 212 489 0 440	www.smcturkey.com.tr	satis.tr@smc.com
UK	+44 (0)845 121 5122	www.smc.uk	sales.gb@smc.com
South Africa	+27 10 900 1233	www.smcza.co.za	Sales.za@smc.com

Printing DQ 00 Printed in Spain

Specifications are subject to change without prior notice and any obligation on the part of the manufacturer