Refrigerated Air Dryers

Series *IDF/IDU*

Standard/High Temperature Air Inlet Type

Protect Pneumatic Equipment from Moisture!

An air dryer removes the vapor from the moist compressed air delivered by the compressor, and prevents it from causing the pneumatic equipment to fail.

Effects of moisture on equipment

Malfunctioning of valves and actuators caused by dripping grease

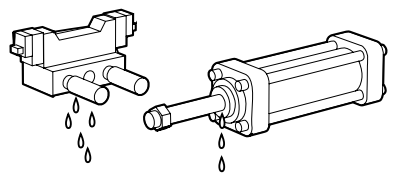

Decomposition of auto drain caused by rusting inside pipes

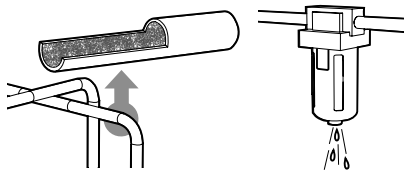

Generation of water droplets

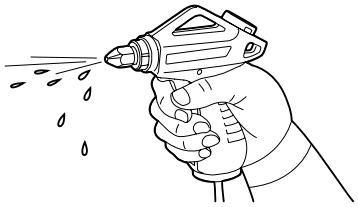

Air flow capacity — Increased up to the **Max. 40 %** (SMC comparison, E type)

Power consumption — Reduced up to the **Max. 40 %** (SMC comparison, E type)

Refrigerant — **R134a (HFC)** Note) **R407C (HFC)**

Coefficient of destruction for ozone is zero.
Note) Except IDF370B

Improved corrosion resistance with the use of stainless steel, plate type heat exchanger
(IDF4E to 75E/IDU3E to 75E)

Standard temperature air inlet [*Series IDF*]

IDF1E, 2E, 3E, 4E, 6E, 8E, 11E, 15E, 22E, 37E, 55E, 75E, 120D, 150D, 190D, 240D, 370B

High temperature air inlet [*Series IDU*]

IDU3E, 4E, 6E, 8E, 11E, 15E, 22E, 37E, 55E, 75E

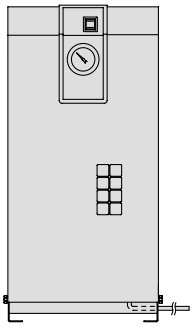

Complies with CFC restrictions

Refrigerated Air Dryers

Series IDF/IDU

1. Standard Products

Series IDF

Standard temperature air inlet type
Rated inlet air temperature: 35, 40°C

Model	Rated inlet condition	Air flow capacity (m³/min (ANR)) 50 Hz	Air flow capacity (m³/min (ANR)) 60 Hz	Applicable air compressor (kW)	Refrigerant	Port size	Page
IDF1E	35°C, 0.7 MPa	0.1	0.12	0.75	R134a (HFC)	Rc 3/8	P.26 to 29
IDF2E		0.2	0.235	1.5			
IDF3E		0.32	0.37	2.2			
IDF4E		0.52	0.57	3.7		Rc 1/2	
IDF6E		0.75	0.82	5.5		Rc 3/4	
IDF8E		1.22	1.32	7.5			
IDF11E		1.65	1.82	11			
IDF15E		2.8	3.1	15		Rc 1	
IDF22E		3.9	4.3	22	R407C (HFC)	R 1	P.30 to 32
IDF37E		5.7	6.1	37		R1 1/2	
IDF55E	40°C, 0.7 MPa	8.4	9.8	55		R 2	
IDF75E		11.0	12.4	75			
IDF120D		20.0	23.0	120		65 (2 1/2B) flange	P.33 to 35
IDF150D		25.0	30.0	150		80 (3B) flange	
IDF190D		32.0	38.0	190			
IDF240D		43.0	50.0	240		100 (4B) flange	
IDF370B	35°C, 0.7 MPa	54.0	65.0	370	R22	150 (6B) flange	

Series IDU

High temperature air inlet type
Rated inlet air temperature: 55°C

Model	Rated inlet condition	Air flow capacity (m³/min (ANR)) 50 Hz	Air flow capacity (m³/min (ANR)) 60 Hz	Applicable air compressor (kW)	Refrigerant	Port size	Page
IDU3E	55°C, 0.7 MPa	0.32	0.37	2.2	R134a (HFC)	Rc 3/8	P.36 to 38
IDU4E		0.52	0.57	3.7		Rc 1/2	
IDU6E		0.75	0.82	5.5		Rc 3/4	
IDU8E		1.1	1.2	7.5			
IDU11E		1.5	1.7	11			
IDU15E		2.6	2.8	15		Rc 1	
IDU22E		3.9	4.3	22	R407C (HFC)	R 1	P.39 to 41
IDU37E		5.7	6.1	37		R 1 1/2	
IDU55E		8.4	9.8	55		R 2	
IDU75E		11.0	12.5	75			

∗ Refer to pages 59 and 73 for dryer models conforming with foreign standards (CE and UL).

2. Options

Specifications	Applicable model	Model (Suffix: Option symbol)	Page
Cool compressed air output	**IDF1E to 75E**	**IDF□E-□-A**	**P.42**
Anti-corrosive treatment	**IDF1E to 75E**	**IDF□E-□-C**	
	IDF120D to 240D	**IDF□D-□(-□)-C**	
	IDF370B	**IDF370B-60□-X204**	
	IDU3E to 75E	**IDU□E-□-C**	
For medium air pressure (up to 1.6 MPa) (Auto drain bowl: Metal bowl with level gauge)	**IDF6E to 37E**	**IDF□E-□-K**	
	IDU3E to 15E	**IDU□E-□-K**	
With heavy duty auto drain (applicable to medium air pressure)	**IDF4E to 75E**	**IDF□E-□-L**	
	IDF370B	**IDF370B-60□-X205**	
	IDU3E to 75E	**IDU□E-□-L**	
With motor type auto drain Note 1)	**IDF4E to 75E**	**IDF□E-□-M**	**P.43**
	IDF120D to 240D	**IDF□D-□(-□)-M**	
	IDU3E to 75E	**IDU□E-□-M**	
With circuit breaker	**IDF4E to 75E**	**IDF□E-□-R**	**P.44**
	IDF120D to 240D	**IDF□D-□(-□)-R**	
	IDF370B	**IDF370B-60□-X202**	
	IDU3E to 75E	**IDU□E-□-R**	
Power supply terminal block connection	**IDF4E to 15E-10**	**IDF□E-10-S**	**P.45**
	IDU3E to 15E-10	**IDU□E-10-S**	
With terminal block for power supply, run, alarm signal and remote operation	**IDF4E to 75E**	**IDF□E-□-T**	
	IDU3E to 75E	**IDU□E-□-T**	
Timer type solenoid valve with auto drain (applicable to medium air pressure)	**IDU3E to 75E**	**IDU□E-□-V**	**P.46**
Water-cooled condenser Note 1)	**IDF120D to 240D**	**IDF□D-□(-□)-W**	

Note 1) The IDF370B is equipped as standard.

3. Optional Accessories

Description	Page
Separately installed power transformer	**P.47 to 54**
Dedicated base for separately installed power transformer	
Dust-protecting filter set	
Bypass piping set	
Foundations bolt set	
Piping adapter	

Model Selection

The corrected air flow capacity, which considers the user's operating conditions, is required for selecting the air dryer. Please select using the following procedures.

1 Selecting IDF or IDU

Select IDF or IDU from inlet air temperature used.
- **Inlet air temperature 5 to 50°C ····· IDF**
- **Inlet air temperature 50 to 80°C ····· IDU**

2 Reading correction factors

Obtain the correction factor A to D suitable for your operating condition from the graph at right.

IDF Selection Example

Condition		Data symbol	Correction factor Note)
Inlet air temperature	40°C	A	0.82
Ambient temperature	35°C	B	0.96
Outlet air pressure dew point	10°C	C	1
Inlet air pressure	0.5 MPa	D	0.88
Air flow rate	0.3 m^3/min	—	—
Power supply frequency	50 Hz	—	—

Note) Values obtained from "Correction Factors" on page 25.

IDU Selection Example

Condition		Data symbol	Correction factor Note)
Inlet air temperature	60°C	A	0.95
Ambient temperature	35°C	B	0.93
Outlet air pressure dew point	10°C	C	1
Inlet air pressure	0.5 MPa	D	0.88
Air flow rate	0.4 m^3/min	—	—
Power supply frequency	60 Hz	—	—

Note) Values obtained from "Correction Factors" on page 25.

3 Confirmation of coefficient

Correction factor = 0.82 x 0.96 x 1 x 0.88 = 0.69
Max. coefficient value is 1.5. Correction factor is 1.5 when the calculation result is 1.5 or greater.

Correction factor = 0.95 x 0.93 x 1 x 0.88 = 0.78
Max. coefficient value is 1.5. Correction factor is 1.5 when the calculation result is 1.5 or greater.

4 Calculating corrected air flow capacity

Obtain the corrected air flow capacity from the following formula.
Corrected air flow capacity = Operating air flow capacity ÷ (Correction factor A x B x C x D)

Corrected air flow capacity = 0.3 m^3/min ÷ (0.82 x 0.96 x 1 x 0.88) = 0.43 m^3/min

Corrected air flow capacity = 0.4 m^3/min ÷ (0.95 x 0.93 x 1 x 0.88) = 0.51 m^3/min

5 Selecting a model

Select a model which corrected air flow capacity exceeds the air flow capacity from the specification table. (For air flow capacity, refer to the data E on page 25.)

According to the corrected air flow capacity of 0.43 m^3/min, the IDF4E will be selected which air flow capacity is 0.52 m^3/min at 50 Hz.

According to the corrected air flow capacity of 0.51 m^3/min, the IDU4E will be selected which air flow capacity is 0.57 m^3/min at 60 Hz.

6 Options

Refer to pages 42 through to 46.

Refer to pages 42 through to 46.

7 Model selected

Refer to pages 26, 30 and 33.

Refer to pages 36 and 39.

8 Selecting optional accessories

Refer to pages 47 through to 54.

Correction Factors

Data A: Inlet Air Temperature

Series IDF

IDF1E to 37E

Inlet air temp. (°C)	Correction factor
5 to 30	1.3
35	1
40	0.82
45	0.68
50	0.57

IDF55E, 75E, 120D to 240D

Inlet air temp. (°C)	Correction factor
5 to 30	1.35
35	1.25
40	1
45	0.8
50	0.6

IDF370B

Inlet air temp. (°C)	Correction factor
5 to 30	1.25
35	1.00
40	0.83
45	0.70
50	0.60

Series IDU

IDU3E to IDU37E

Inlet air temp. (°C)	Correction factor
5 to 45	1.15
50	1.07
55	1
60	0.95
65	0.9
70	0.86
75	0.82
80	0.79

IDU55E, 75E

Inlet air temp. (°C)	Correction factor
5 to 45	1.21
50	1.10
55	1
60	0.87
65	0.76
70	0.74
75	0.72
80	0.70

Data B: Ambient Temperature

Series IDF

IDF1E to 75E

Ambient temp. (°C)	Correction factor
2 to 25	1.14
30	1.04
32	1
35	0.96
40	0.9

IDF120D to 240D

Ambient temp. (°C)	Correction factor
2 to 25	1.10
30	1.05
32	1
35	0.95
40	0.90

Series IDU

IDU3E to IDU37E

Ambient temp. (°C)	Correction factor
2 to 25	1.2
30	1.04
32	1
35	0.93
40	0.84

IDU55E, 75E

Ambient temp. (°C)	Correction factor
2 to 25	1.25
30	1.11
32	1
35	0.90
40	0.63

Data C: Outlet Air Pressure Dew Point

Series IDF

IDF1E to 75E, 120D to 240D, 370B

Outlet air pressure dew point (°C)	Correction factor
3	0.55
5	0.7
10	1
15	1.3

Series IDU

IDU3E to IDU37E

Outlet air pressure dew point (°C)	Correction factor
3	0.55
5	0.7
10	1
15	1.3

IDU55E, 75E

Outlet air pressure dew point (°C)	Correction factor
3	0.53
5	0.67
10	1
15	1.30

Data D: Inlet Air Pressure

Series IDF

IDF1E to 75E

Inlet air pressure (MPa)	Correction factor
0.2	0.62
0.3	0.72
0.4	0.81
0.5	0.88
0.6	0.95
0.7	1
0.8	1.06
0.9	1.11
1 to 1.6	1.16

IDF120D to 370B

Inlet air pressure (MPa)	Correction factor
0.2	0.68
0.3	0.77
0.4	0.84
0.5	0.90
0.6	0.95
0.7	1
0.8	1.03
0.9	1.06
1.0	1.08

Series IDU

IDU3E to 37E

Inlet air pressure (MPa)	Correction factor
0.2	0.62
0.3	0.72
0.4	0.81
0.5	0.88
0.6	0.95
0.7	1
0.8	1.06
0.9	1.11
1 to 1.6	1.16

IDU55E, 75E

Inlet air pressure (MPa)	Correction factor
0.2	0.62
0.3	0.69
0.4	0.77
0.5	0.85
0.6	0.93
0.7	1
0.8	1.08
0.9	1.16
1 to 1.6	1.23

Data E: Air Flow Capacity

Series IDF

Model		IDF1E	IDF2E	IDF3E	IDF4E	IDF6E	IDF8E	IDF11E	IDF15E	IDF22E	IDF37E	IDF55E	IDF75E
Air flow capacity m^3/min (ANR)	50 Hz	0.10	0.20	0.32	0.52	0.75	1.22	1.65	2.8	3.9	5.7	8.4	11.0
	60 Hz	0.12	0.235	0.37	0.57	0.82	1.32	1.82	3.1	4.3	6.1	9.8	12.4

Model		IDF120D	IDF150D	IDF190D	IDF240D	IDF370B
Air flow capacity m^3/min (ANR)	50 Hz	20.0	25.0	32.0	43.0	54.0
	60 Hz	23.0	30.0	38.0	50.0	65.0

Note) In the case of option A (Cool compressed air output), the air flow capacity is different. Refer to page 42 for details.

Series IDU

Model		IDU3E	IDU4E	IDU6E	IDU8E	IDU11E	IDU15E	IDU22E	IDU37E	IDU55E	IDU75E
Air flow capacity m^3/min (ANR)	50 Hz	0.32	0.52	0.75	1.1	1.5	2.6	3.9	5.7	8.4	11.0
	60 Hz	0.37	0.57	0.82	1.2	1.7	2.8	4.3	6.1	9.8	12.5

Refrigerant R134a (HFC)
Standard Temperature Air Inlet
Series IDF□E
1E, 2E, 3E, 4E, 6E, 8E, 11E, 15E
(Inlet air temperature: 35°C, Outlet air pressure dew point: 10°C)

How to Order

IDF 8 E — 10 —

Size

Size	Air compressor size Note)
1	0.75 kW
2	1.5 kW
3	2.2 kW
4	3.7 kW
6	5.5 kW
8	7.5 kW
11	11 kW
15	15 kW

Note) Please note that the above values are for reference only. Therefore, check the actual compressor capacity.

Voltage

Symbol	Voltage	Applicable size							
		1	2	3	4	6	8	11	15
10	Single-phase 100 VAC (50 Hz) 100/110 VAC (60 Hz)	●	●	●	●	●	●	●	●
20	Single-phase 200 VAC (50 Hz) 200/220 VAC (60 Hz)	—	—	●	●	●	●	●	●

Option

Symbol Note 1) / Option / Size	Nil	A	C	K	L	M	R	S	T
	None	Cool compressed air output	Anti-corrosive treatment	For medium air pressure Note 4) Auto drain bowl: (Metal bowl with level gauge)	With heavy duty auto drain (applicable to medium air pressure) Note 4)	With motor type auto drain	With circuit breaker	Terminal block connection (Voltage symbol 10 only) Note 2)	With terminal block for run and alarm signal
1	●	●	●	—	—	—	—	●	—
2	●	●	●	—	—	—	—	●	—
3	●	●	●	—	—	—	—	●	—
4	●	●	●	—	●	●	●	●	●
6	●	●	●	●	●	●	●	●	●
8	●	●	●	●	●	●	●	●	●
11	●	●	●	●	●	●	●	●	●
15	●	●	●	●	●	●	●	●	●

Note 1) Enter alphabetically when multiple options are combined.
However, the following combinations are not possible.
- R and S (Because S function is also included in R.)
- S and T (Because S function is also included in T.)
- Combination of K, L and M are not possible because an auto drain can only be attached to a single option.

Note 2) Voltage symbol 20 (200 VAC) is the terminal block connection as standard. The option S cannot be chosen.
Voltage symbol 10 (100 VAC) is the power cable with plug as standard.

Note 3) Refer to pages 42 through to 45 for further information on options.

JIS Symbol

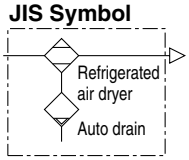

Standard Specifications

Specifications \ Model				Standard temperature air inlet							
				IDF1E	IDF2E	IDF3E	IDF4E	IDF6E	IDF8E	IDF11E	IDF15E
Operating ranges	Fluid			Compressed air							
	Inlet air temperature (°C)			5 to 50							
	Inlet air pressure (MPa)			0.15 to 1.0							
	Ambient temp. (humidity) (°C)			2 to 40 (Relative humidity of 85% or less)							
Rated conditions Note 3)	Air flow capacity (m^3/min)	Standard condition (ANR) Note 1)	50 Hz	0.10	0.20	0.32	0.52	0.75	1.22	1.65	2.8
			60 Hz	0.12	0.235	0.37	0.57	0.82	1.32	1.82	3.1
		Compressor intake condition Note 2)	50 Hz	0.10	0.21	0.33	0.54	0.78	1.27	1.72	2.9
			60 Hz	0.12	0.24	0.38	0.59	0.85	1.37	1.9	3.2
	Inlet air pressure (MPa)			0.7							
	Inlet air temperature (°C)			35							
	Ambient temperature (°C)			32							
	Outlet air pressure dew point (°C)			10							
Electric specifications	Power supply voltage (frequency) Note 4)			Single-phase: 100 VAC (50 Hz), 100/110 VAC (60 Hz) Note 4) Single-phase: 200 VAC (50 Hz), 200/220 VAC (60 Hz)							
	Power consumption (W) 50/60 Hz	Single-phase 100 V		180/202	180/202	180/202	180/202	180/202	208/236	385/440	540/620
		Single-phase 200 V		—	—						
	Operating current (A) 50/60 Hz	Single-phase 100 V		2.4/2.5	2.4/2.5	2.4/2.5	2.4/2.5	2.4/2.5	3.0/3.1	5.7/5.7	6.1/6.3
		Single-phase 200 V		—	—	1.2/1.3	1.2/1.3	1.2/1.3	1.5/1.5	3.4/3.0	3.8/4.0
Applicable circuit breaker capacity Note 5) (A)				10 (100 VAC), 5 (200 VAC)							10 (100 VAC) 10 (200 VAC)
Condenser				Air-cooled							
Refrigerant				R134a (HFC)							
Auto drain				Float type (Normally closed)	Float type (Normally open)						
Port size				Rc 3/8			Rc 1/2	Rc 3/4			Rc 1
Mass (kg)				16	17	18	22	23	27	28	46
Coating color				Body panel: White 1 Base: Gray 2							
Applicable air compressor output (Reference) For screw type (kW)				0.75	1.5	2.2	3.7	5.5	7.5	11	15

Note 1) Air flow capacity under the standard condition (ANR) [atmospheric pressure at 20°C, relative humidity at 65%]
Note 2) Air flow capacity converted by the compressor intake condition [atmospheric pressure at 32°C]
Note 3) Select air dryer according to "Model Selection" (pages 24 and 25) for the models beyond the rated specifications.
Note 4) When selecting a power supply voltage, refer to "How to Order" on page 26.
Note 5) Install a circuit breaker with a sensitivity of 30 mA.

Replacement Parts

Model	IDF1E	IDF2E	IDF3E	IDF4E	IDF6E	IDF8E	IDF11E	IDF15E
Auto drain replacement parts no. Note 6)	AD37	AD38			AD48			

Note 6) The part number for the auto drain components without including the body part.
Body part replacement is impossible.

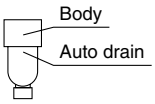

Construction Principle (Air/Refrigerant Circuit)

Humid, hot air coming into the air dryer will be cooled down by a cooler (heat exchanger). Water condensed at this time will be removed from the air by a drain separator (auto drain) and drained out automatically. Air separated from the water will be heated by a re-heater (heat exchanger) to obtain the dried air, which goes through to the outlet side.

IDF1E

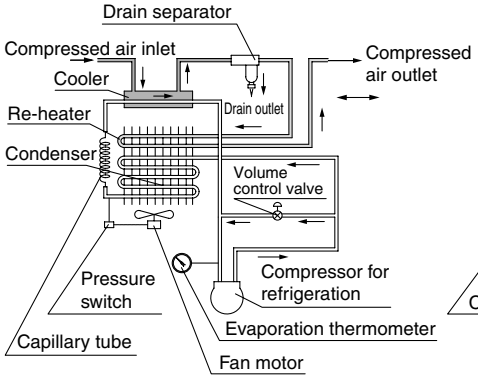

IDF2E, IDF3E

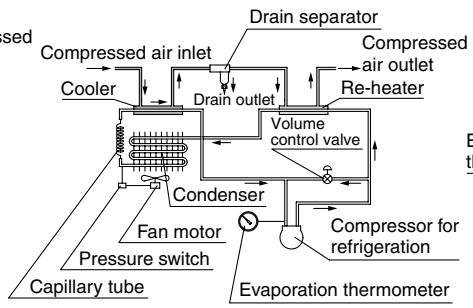

IDF4E, IDF6E
IDF8E, IDF11E, IDF15E

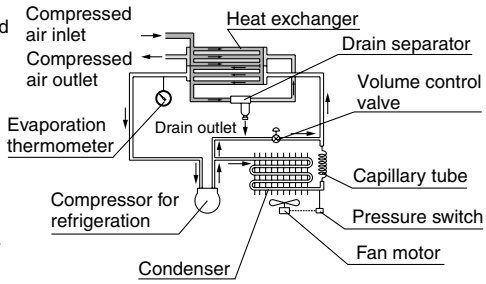

Dimensions

IDF1E to IDF3E

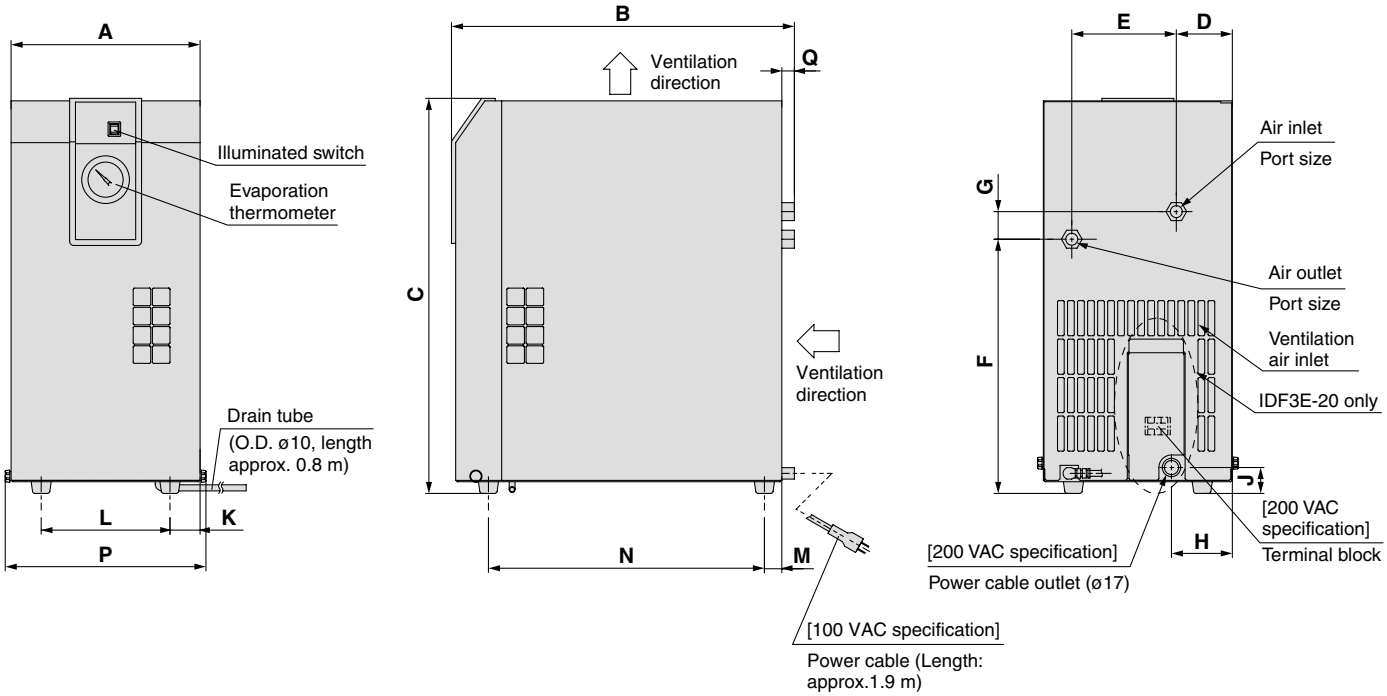

IDF4E to IDF11E

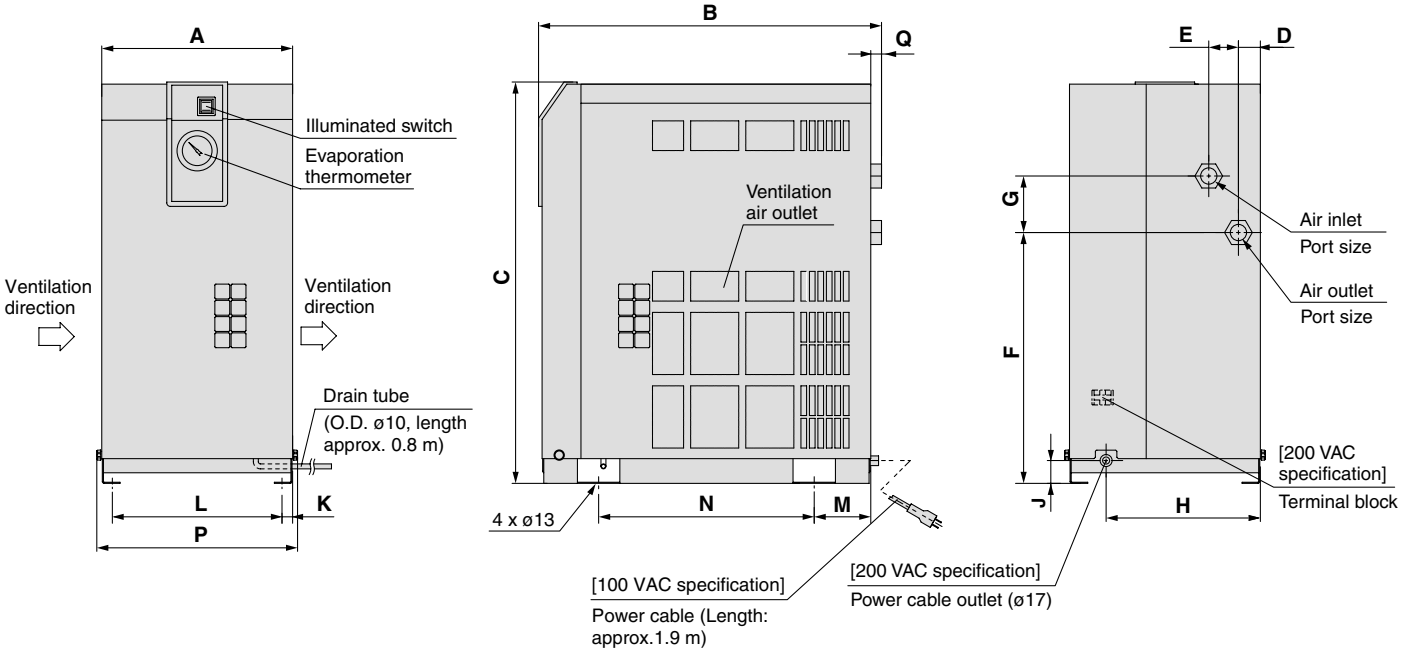

Dimensions (mm)

Model	Port size	A	B	C	D	E	F	G	H	J	K	L	M	N	P	Q
IDF1E	Rc 3/8	226	410	413	69	101	270	32	—	—	38	150	21	330	240	15
IDF2E					51	125	232	138					24	327		
IDF3E				473	67		304	33	73	31	36	154	21	330		
IDF4E	Rc 1/2	270	453	498	31	42	283	80	230	32	15	240	80	275	284	13
IDF6E	Rc 3/4		455													15
IDF8E			485	568			355							300		
IDF11E																

Dimensions

IDF15E

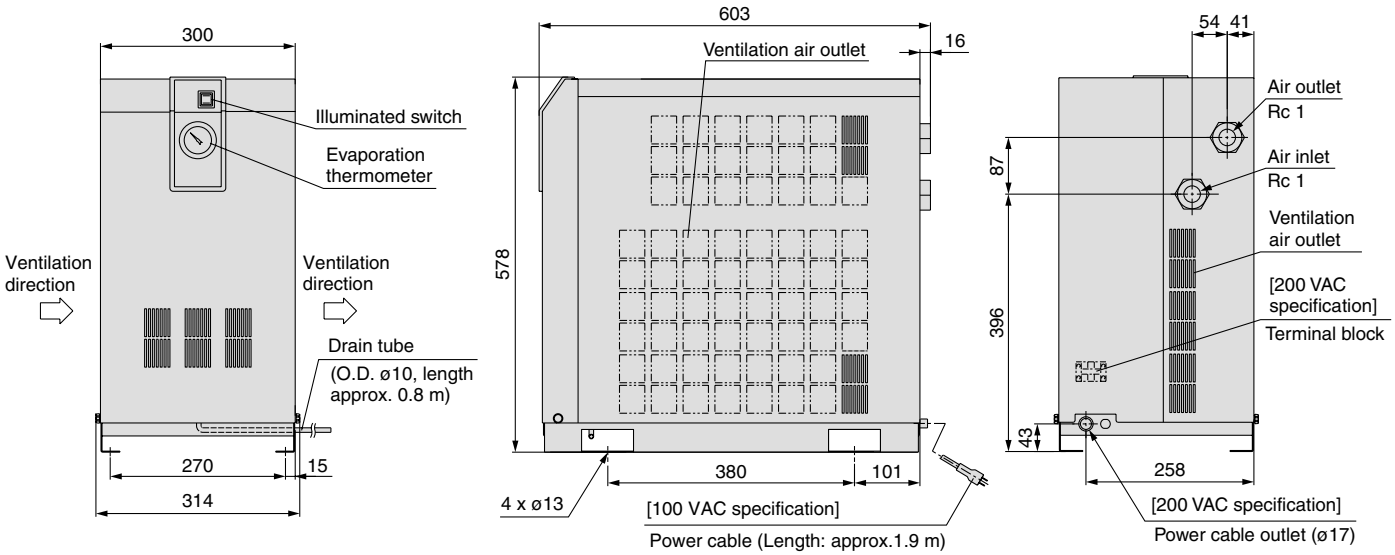

Refrigerant R407C (HFC)
Standard Temperature Air Inlet
Series IDF□E
22E, 37E, 55E, 75E
(Inlet air temp.: 35°C (22E, 37E), 40°C (55E, 75E), Outlet air pressure dew point: 10°C)

How to Order

IDF 55 E — 30 —

Nil
A
C
K
L
M
R
T

Size

Size	Air compressor size Note)
22	22 kW
37	37 kW
55	55 kW
75	75 kW

Note) Please note that the above values are for reference only. Therefore, check the actual compressor capacity.

Voltage

Symbol	Voltage	Applicable size			
		22	37	55	75
20	Single-phase 200 VAC (50 Hz) 200/220 VAC (60 Hz)	●	●	—	—
30	Three-phase 200 VAC (50 Hz) 200/220 VAC (60 Hz)	●	●	●	●

Option

Symbol Note 1) / Option / Size	Nil	A	C	K	L	M	R	T
	None	Cool compressed air output	Anti-corrosive treatment	For medium air pressure Auto drain bowl: Metal bowl with level gauge	With heavy duty auto drain (applicable to medium air pressure)	With motor type auto drain	With circuit breaker	With terminal block for run and alarm signal
22	●	●	●	●	●	●	●	●
37	●	●	●	●	●	●	●	●
55	●	●	●	—Note 2)	●	●	●	●
75	●	●	●	—Note 2)	●	●	●	●

Note 1) Enter alphabetically when multiple options are combined.
However, the following combinations are not possible.
• Combination of K, L and M are not possible because an auto drain can only be attached to a single option.
Note 2) Select the option L for the 55E and 75E which need medium air pressure.
Note 3) Refer to pages 42 through to 45 for further information on options.

JIS Symbol

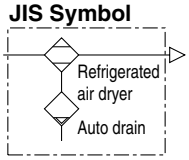

Standard Specifications

Specifications \ Model				Standard temperature air inlet			
				IDF22E	IDF37E	IDF55E	IDF75E
Operating ranges	Fluid			Compressed air			
	Inlet air temperature (°C)			5 to 50			
	Inlet air pressure (MPa)			0.15 to 1.0			
	Ambient temp. (humidity) (°C)			2 to 40 (Relative humidity of 85% or less)			
Rated conditions Note 3)	Air flow capacity (m^3/min)	Standard condition (ANR) Note 1)	50 Hz	3.9	5.7	8.4	11.0
			60 Hz	4.3	6.1	9.8	12.4
		Compressor intake condition Note 2)	50 Hz	4.1	5.9	8.7	11.5
			60 Hz	4.5	6.4	10.2	12.9
	Inlet air pressure (MPa)			0.7			
	Inlet air temperature (°C)			35		40	
	Ambient temperature (°C)			32			
	Outlet air pressure dew point (°C)			10			
Electric specifications	Power supply voltage (frequency) Note 4)			Single-phase/Three-phase: 200 VAC (50 Hz) Note 4) Single-phase/Three-phase: 200/220 VAC (60 Hz)		Three-phase: 200 VAC (50 Hz) Three-phase: 200/220 VAC (60 Hz)	
	Power consumption (W) 50/60 Hz	Single-phase 200 V		810/940	810/940	—	—
		Three-phase 200 V		850/1070	850/1070	1300/1700	2000/2500
	Operating current (A) 50/60 Hz	Single-phase 200 V		4.3/4.7	4.3/4.7	—	—
		Three-phase 200 V		3.3/3.5	3.3/3.5	5.0/5.4	7.2/8.0
Applicable circuit breaker capacity Note 5) (A)				10 (200 VAC)			15 (200 VAC)
Condenser				Air-cooled			
Refrigerant				R407C (HFC)			
Auto drain				Float type (Normally open)			
Port size				R 1	R 1 1/2	R 2	
Mass (kg)				54	62	100	116
Coating color				Body panel: White 1 Base: Gray 2			
Applicable air compressor output (Reference) For screw type (kW)				22	37	55	75

Note 1) Air flow capacity under the standard condition (ANR) [atmospheric pressure at 20°C, relative humidity at 65%]
Note 2) Air flow capacity converted by the compressor intake condition [atmospheric pressure at 32°C]
Note 3) Select air dryer according to "Model Selection" (pages 24 and 25) for the models beyond the rated specifications.
Note 4) When selecting a power supply voltage, refer to "How to Order" on page 30.
Note 5) Install a circuit breaker with a sensitivity of 30 mA.

Replacement Parts

Model	ID22E	IDF37E	IDF55E	IDF75E
Auto drain replacement parts no. Note 6)	AD48			

Note 6) The part number for the auto drain components without including the body part. Body part replacement is impossible.

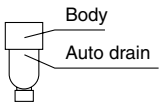

Construction Principle (Air/Refrigerant Circuit)

Humid, hot air coming into the air dryer will be cooled down by a cooler re-heater (heat exchanger). Water condensed at this time will be removed from the air by an auto drain and drained out automatically. Air separated from the water will be heated by a cooler re-heater (heat exchanger) to obtain the dried air, which goes through to the outlet side.

IDF22E, IDF37E, IDF55E, IDF75E

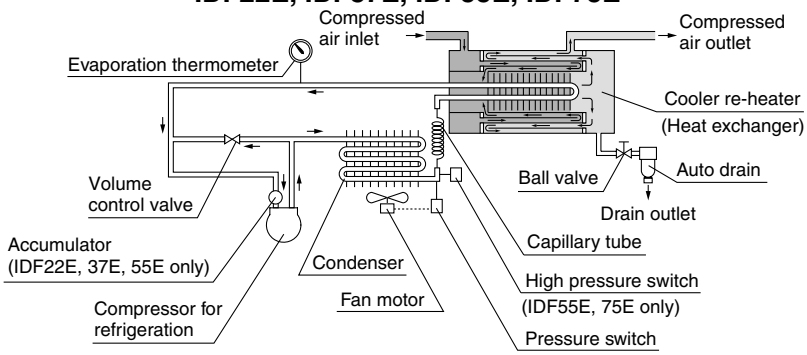

Dimensions

IDF22E, IDF37E

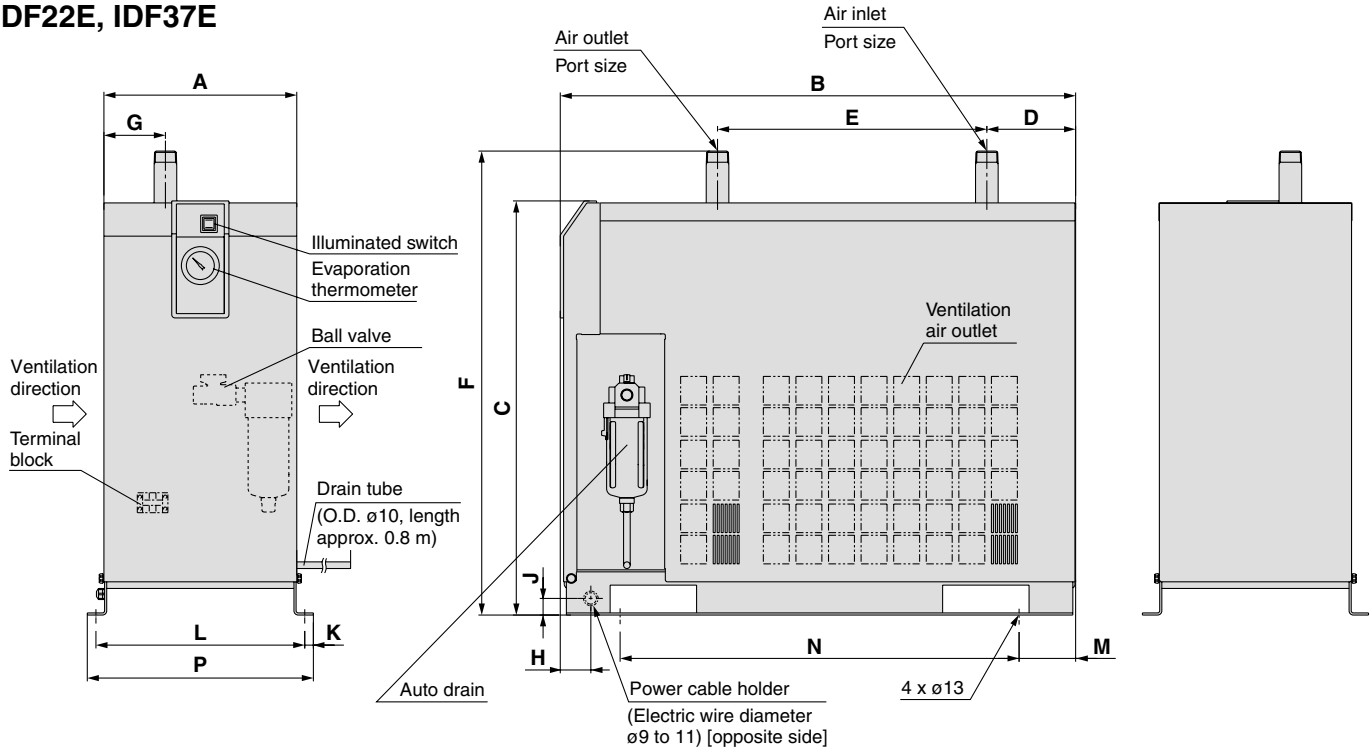

IDF55E, IDF75E

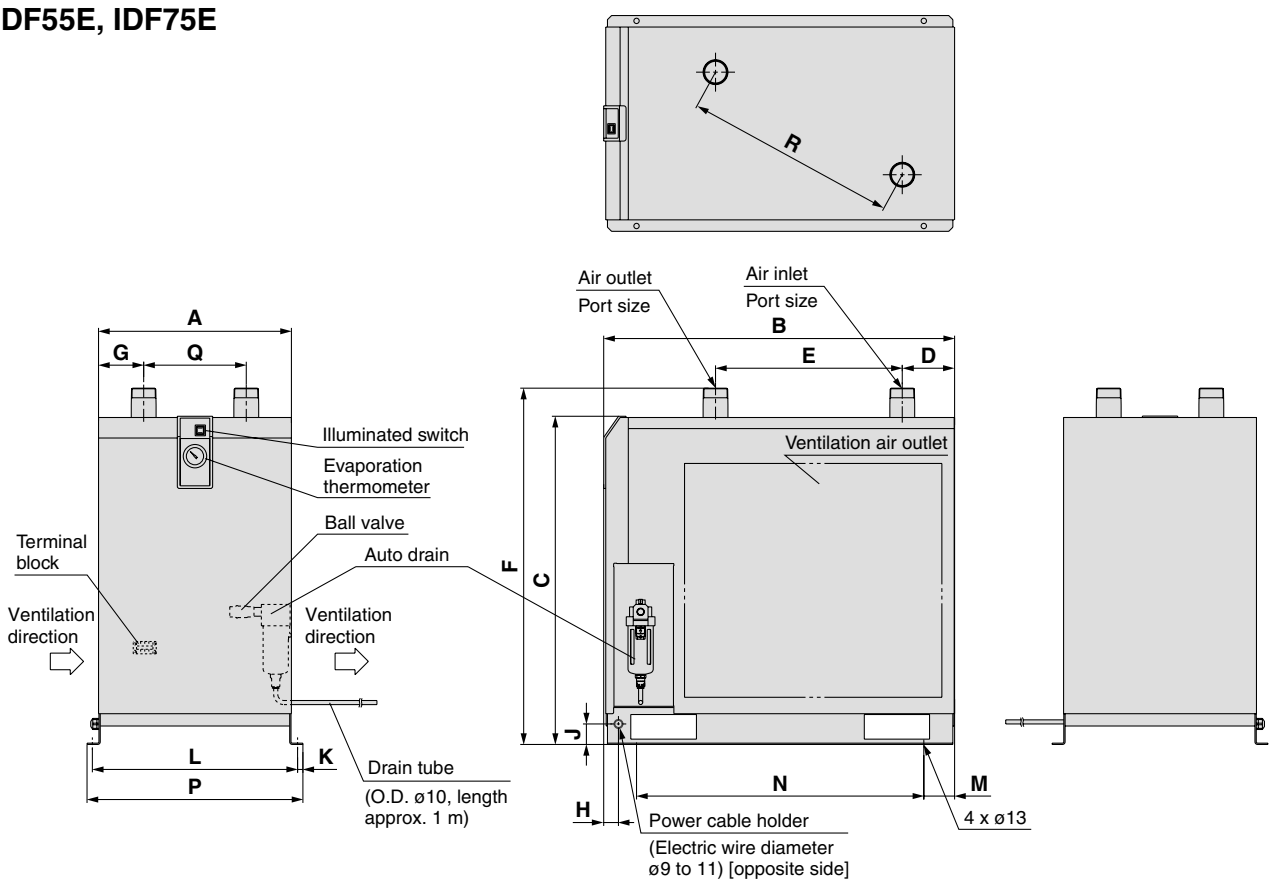

Dimensions (mm)

Model	Port size	A	B	C	D	E	F	G	H	J	K	L	M	N	P	Q	R
IDF22E	R 1	290	775	623	134	405	698	93	46	25	13	314	85	600	340	—	—
IDF37E	R 1 1/2		855											680			
IDF55E	R 2	470	855	800	128	455	868	110	36	50	13	500	75	700	526	250	519
IDF75E				900			968										

Refrigerant R407C (HFC) / R22
Standard Temperature Air Inlet
Series IDF□D, B
120D, 150D, 190D, 240D, 370B
(Inlet air temp.: 40°C (120D, 150D, 190D, 240D), 35°C (370B), Outlet air pressure dew point: 10°C)

How to Order

Refrigerant R407C
IDF120D to IDF240D

IDF 120 D — 3 / 9 — 220V / 240V / 380V / 400V / 415V / 440V — Nil / C / M / R / W

Size

Size	Compressor size
120	120 kW
150	150 kW
190	190 kW
240	240 kW

Voltage

Symbol	Voltage
3	Three-phase 200 VAC (50 Hz) 200/220 VAC (60 Hz)
9	Three-phase different voltage (Built-in transformer)

Option

Symbol	Option
Nil	None
C	Anti-corrosive treatment
M	With motor type auto drain
R	With circuit breaker
W Note)	Water-cooled condenser

Note 1) Combination of a voltage symbol "9" and an option symbol "W" is not available. (Order Transformer separately.)
Note 2) Enter alphabetically when multiple options are combined.
Note 3) Refer to pages 42 through to 46 for further information on options.

Refrigerant R22
IDF370B

IDF 370 B — 60 — 3 / 9 — 220V / 240V / 380V / 400V / 415V / 440V — Nil / X202 / X204 / X205

Size

Size	Compressor size
370	370 kW

Port size

Symbol	Port size
60	150 (6B) flange

Voltage

Symbol	Voltage
3	Three-phase 200 VAC (50/60 Hz)
9 Note)	Three-phase different voltage

Note) Transformer integrated into the base

Option

Symbol	Option
Nil	None
X202	With circuit breaker
X204	Anti-corrosive treatment
X205	With heavy duty auto drain Note 3)

Note 1) When more than one operation is required, indicate in numeric order.
Note 2) Refer to pages 42 and 44 for further information on options.
Note 3) Not applicable to the medium air pressure.

Standard Specifications

Specifications \ Model			Standard temperature air inlet				
			IDF120D	IDF150D	IDF190D	IDF240D	IDF370B
Operating ranges	Fluid		Compressed air				
	Inlet air temperature (°C)		5 to 50				
	Inlet air pressure (MPa)		0.15 to 0.97				
	Ambient temp. (humidity) (°C)		2 to 43 (Relative humidity of 85% or less)				
Rated conditions Note 3)	Air flow capacity (m^3/min)	Standard condition (ANR) Note 1) 50 Hz	20	25	32	43	54
		Standard condition (ANR) Note 1) 60 Hz	23	30	38	50	65
		Compressor intake condition Note 2) 50 Hz	21	26	33	45	56
		Compressor intake condition Note 2) 60 Hz	24	31	40	52	68
	Inlet air pressure (MPa)		0.7				
	Inlet air temperature (°C)		40				35
	Ambient temperature (°C)		32				—
	Outlet air pressure dew point (°C)		10				
Electric specifications	Power supply voltage (frequency) Note 4)		Three-phase: 200 VAC (50 Hz), 200/220 VAC (60 Hz)				Three-phase: 200 VAC (50/60 Hz)
	Power consumption (kW) 50/60 Hz	Three-phase 200 V	2.5	4.0	4.9	6.3	8.1
			3.1	5.0	5.9	7.6	9.5
	Operating current (A) 50/60 Hz	Three-phase 200 V	9.8	15.3	19.5	26.1	28.0
			10.1	16.1	20.1	26.4	31.0
Applicable circuit breaker capacity Note 5) (A)			30	45	50	60	80
Condenser			Air-cooled				Water-cooled
Refrigerant			R407C (HFC)				R22
Auto drain			ADH4000-04				ADM200-042-8
Port size Note 6)			65 (2 1/2B) flange	80 (3B) flange		100 (4B) fange	150 (6B) flange
Mass (kg)			330	350	450	660	1100
Coating color			Body panel: White Base: Black				Operating panel part: Sky blue Other panel (except base): White
Applicable air compressor output (Reference) For screw type (kW)			120	150	190	240	370

Note 1) Air flow capacity under the standard condition (ANR) [atmospheric pressure at 20°C, relative humidity at 65%]
Note 2) Air flow capacity converted by the compressor intake condition [atmospheric pressure at 32°C]
Note 3) Select air dryer according to "Model Selection" (pages 24 and 25) for the models beyond the rated specifications.
Note 4) When selecting a power supply voltage, refer to "How to Order" on page 33.
Note 5) Install a circuit breaker with a sensitivity of 30 mA.
Note 6) JIS 10K FF is used as a flange.

Water-Cooled Condenser Specifications (IDF370B)

Condenser	Shell and tube type
Cooling water flow Note 1)	100 ℓ/min
Cooling tower performance Note 2)	10 RT
Water flow regulator	Pressure type automatic water supply valve
Fluid port size	1 1/4 union

Note 1) Value when cooling water inlet temperature is 32°C and with rated load
Note 2) Calculated at 1 RT = 3,300 kcal/h

Motor Type Auto Drain

Model	Operating cycle	
IDF370B	4 times per minute	For 8 sec/min

Power supply	200 VAC 50/60 Hz
Power consumption	4 W

JIS Symbol

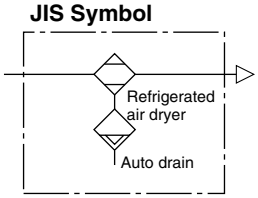

Construction Principle (Air/Refrigerant Circuit)

IDF120D to IDF240D

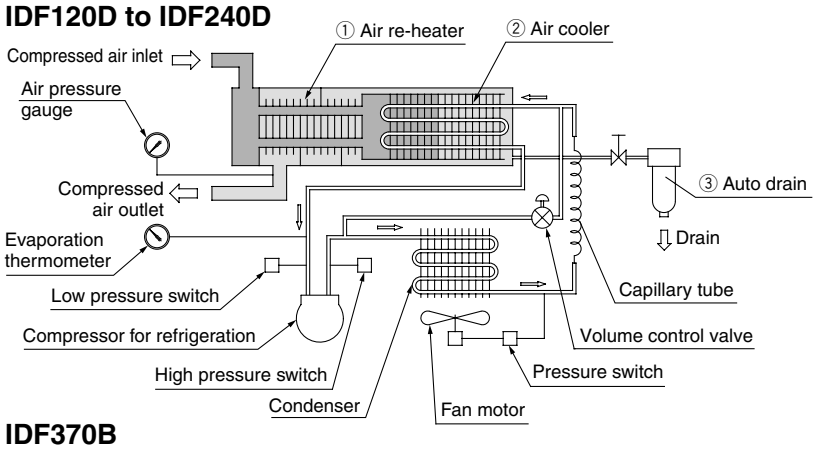

High temperature humid air from the air compressor passes through the air re-heater ① and is pre-cooled by dehumified cool air. Then it is cooled to the specified temperature by the air cooler ② using the evaporation heat of refrigerant.
At this time, the oil mist and moisture generated by condensation are automatically exhausted by the auto drain ③. The cooled and dehumidified air goes back to the air re-heater ① and heat is exchanged with hot air that flows into the air re-heater. It is supplied as dry warm air without "sweating" in the piping system.

IDF370B

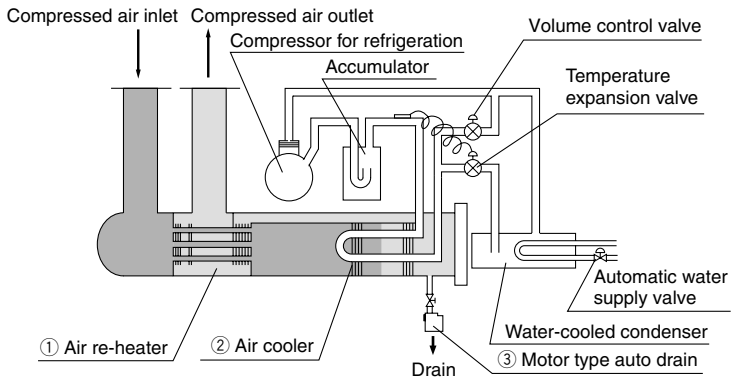

Dimensions

IDF120D, IDF150D, IDF190D, IDF240D

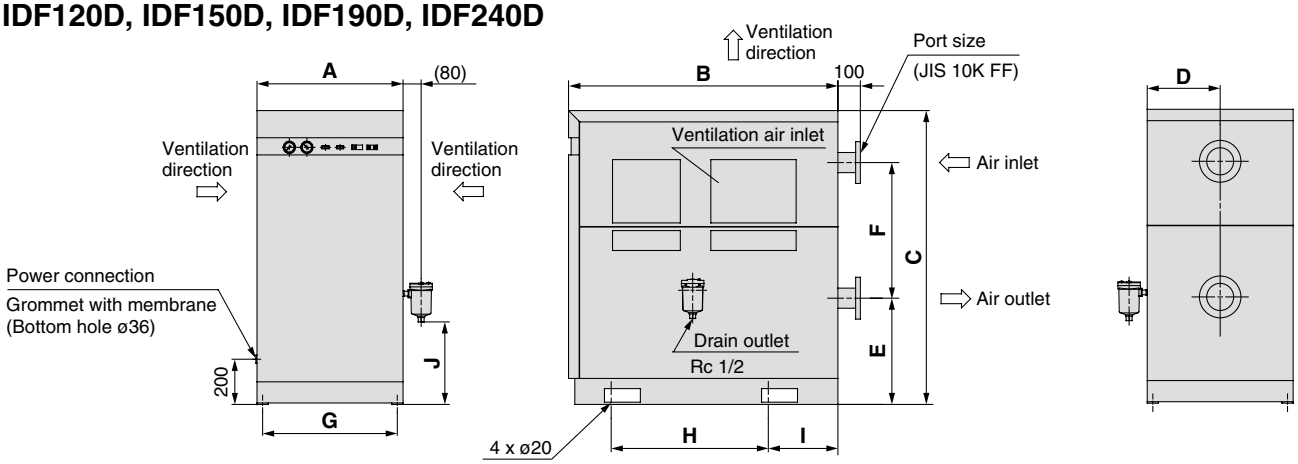

(mm)

Model	Inlet and outlet port	A	B	C	D	E	F	G	H	I	J
IDF120D	JIS 10K FF 65(2 1/2B) flange	650	1200	1300	325	470	600	600	660	330	365
IDF150D	JIS 10K FF 80(3B) flange										
IDF190D	JIS 10K FF 80(3B) flange	750	1510	1320	375	480	600	700	800	355	427
IDF240D	JIS 10K FF 100(4B) flange	770	1550	1640	385	703	730	700	800	355	592

∗ Auto drain is enclosed in the same shipping package as the main body. The customer is required to mount the auto drain to the air dryer.

IDF370B

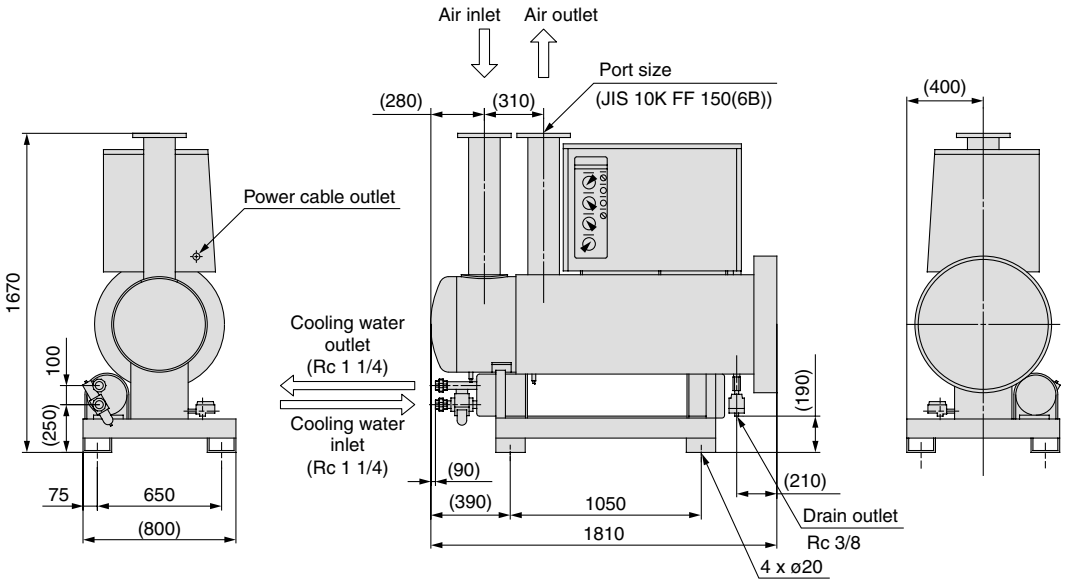

Power Transformer Integrated Type

IDF370B

The power transformer marked with the voltage symbol 9 is integrated into the refrigerated air dryer.

IDF120D to 240D

The power transformer marked with the voltage symbol 9 is built into the inside of the main unit, and the outside dimensions are to the same as those with the voltage symbol 3.

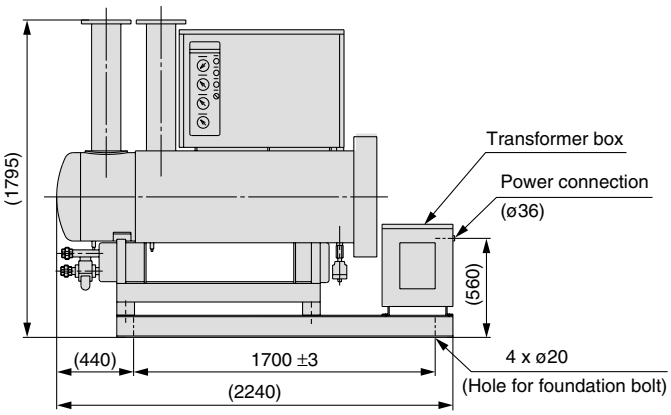

Refrigerant R134a (HFC)
High Temperature Air Inlet
Series IDU□E
3E, 4E, 6E, 8E, 11E, 15E
(Inlet air temperature: 55°C, Outlet air pressure dew point: 10°C)

How to Order

IDU 4 E — 10 —

Nil
C
K
L
M
R
S
T
V

Size

Size	Air compressor size Note)
3	2.2 kW
4	3.7 kW
6	5.5 kW
8	7.5 kW
11	11 kW
15	15 kW

Note) Please note that the above values are for reference only. Therefore, check the actual compressor capacity.

Voltage

Symbol	Voltage	Applicable size					
		3	4	6	8	11	15
10	Single-phase 100 VAC (50 Hz) 100/110 VAC (60 Hz)	●	●	●	●	●	●
20	Single-phase 200 VAC (50 Hz) 200/220 VAC (60 Hz)	●	●	●	●	●	●
23	Single-phase 230 VAC (50 Hz)	●	●	●	●	●	●

Option

Symbol Note 1) / Option / Size	Nil	C	K	L	M	R	S	T	V
	None	Anti-corrosive treatment	For medium air pressure (Auto drain bowl: Metal bowl with level gauge)	With heavy duty auto drain (applicable to medium air pressure)	With motor type auto drain (Voltage symbol 10, 20 only)	With circuit breaker	Terminal block connection (Voltage symbol 10 only) Note 2)	With terminal block for run and alarm signal	Timer type solenoid valve with auto drain (Voltage symbol 23 only) (applicable to medium air pressure)
3	●	●	●	●	●	●	●	●	●
4	●	●	●	●	●	●	●	●	●
6	●	●	●	●	●	●	●	●	●
8	●	●	●	●	●	●	●	●	●
11	●	●	●	●	●	●	●	●	●
15	●	●	●	— Note 4)	●	●	●	●	●

Note 1) Enter alphabetically when multiple options are combined.
However, the following combinations are not possible.
- R and S (Because S function is also included in R.)
- S and T (Because S function is also included in T.)
- Combination of K, L, M and V are not possible because an auto drain can only be attached to a single option.

Note 2) Voltage symbol 20 (200 VAC) and 23 (230 VAC) are the terminal block connection as standard. The option S cannot be chosen.
Voltage symbol 10 (100 VAC) is the power cable with plug as standard.

Note 3) Refer to pages 42 through to 46 for further information on options.

Note 4) The mounting frame (special order) for the IDU15E is attached to the option L. For further details, please consult with SMC.

Standard Specifications

Specifications \ Model				High temperature air inlet					
				IDU3E	IDU4E	IDU6E	IDU8E	IDU11E	IDU15E
Operating ranges	Fluid			Compressed air					
	Inlet air temperature (°C)			5 to 80					
	Inlet air pressure (MPa)			0.15 to 1.0					
	Ambient temp. (humidity) (°C)			2 to 40 (Relative humidity of 85% or less)					
Rated conditions Note 3)	Air flow capacity (m^3/min)	Standard condition (ANR) Note 1)	50 Hz	0.32	0.52	0.75	1.1	1.5	2.6
			60 Hz	0.37	0.57	0.82	1.2	1.7	2.8
		Compressor intake condition Note 2)	50 Hz	0.33	0.54	0.78	1.14	1.6	2.7
			60 Hz	0.38	0.59	0.85	1.25	1.8	2.9
	Inlet air pressure (MPa)			0.7					
	Inlet air temperature (°C)			55					
	Ambient temperature (°C)			32					
	Outlet air pressure dew point (°C)			10					
Electric specifications	Power supply voltage (frequency) Note 4)			Single-phase: 100 VAC (50 Hz), 100/110 VAC (60 Hz) Note 4) Single-phase: 200 VAC (50 Hz), 200/220 VAC (60 Hz) Single-phase: 230 VAC ±10% (50 Hz)					
	Power consumption (W) 50/60 Hz	Single-phase 100 V		180/202	208/236	385/440	250/290 Note 5)	425/470 Note 5)	585/685 Note 5)
		Single-phase 200 V							
		Single-phase 230 V (50 Hz)		210	220	400	260	425	550
	Operating current (A) 50/60 Hz	100 V		2.4/2.5	3.0/3.1	5.7/5.7	3.4/3.5	5.7/6.0	6.2/6.3
		200 V		1.2/1.3	1.5/1.5	3.4/3.0	1.7/1.7	3.5/3.2	4.1/4.0
		230 V (50 Hz)		1.5	1.6	2.9	1.7	3.0	3.4
Applicable circuit breaker capacity Note 6) (A)				10 (100 VAC), 5 (200 VAC, 230 VAC)					10 (100 VAC) 10 (200 VAC)
Refrigerant				R134a (HFC)					
Auto drain				Float type (Normally open)					
Port size				Rc 3/8	Rc 1/2	Rc 3/4			Rc 1
Mass (kg)				23	27	28	44	47	71
Coating color				Body panel: White 1 Base: Gray 2					
Applicable air compressor output (Reference) For screw type (kW)				2.2	3.7	5.5	7.5	11	15

Note 1) Air flow capacity under the standard condition (ANR) [atmospheric pressure at 20°C, relative humidity at 65%]
Note 2) Air flow capacity converted by the compressor intake condition [atmospheric pressure at 32°C]
Note 3) Select air dryer according to "Model Selection" (pages 24 and 25) for the models beyond the rated specifications.
Note 4) When selecting a power supply voltage, refer to "How to Order" on page 36.
Note 5) For the models IDU8E or larger, the energy saving function is performed by the addition of an aftercooler.
Note 6) Install a circuit breaker with a sensitivity of 30 mA.

JIS Symbol

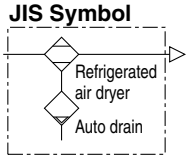

Replacement Parts

Model	IDU3E	IDU4E	IDU6E	IDU8E	IDU11E	IDU15E
Auto drain replacement parts no. Note 7)	AD48					AMG-CA450-D

Note 7) The part number for the auto drain components without including the body part.
Body part replacement is impossible.

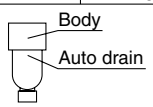

Construction Principle (Air/Refrigerant Circuit)

Humid, hot air coming into the air dryer will be cooled down by a heat exchanger. Water condensed at this time will be removed from the air by a drain separator and drained out automatically. Air separated from the water will be heated by a heat exchanger to obtain the dried air, which goes through to the outlet side.
For models IDU8E to 15E, the humid and hot air introduced to the air dryer will be cooled down by the aftercooler before being cooled down by the heat exchanger.

IDU3E, IDU4E, IDU6E

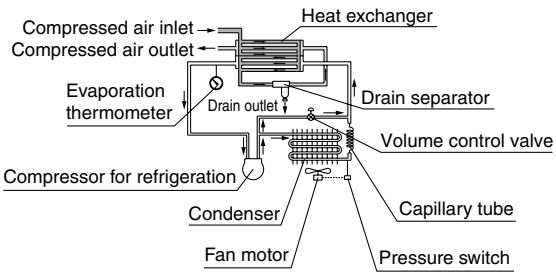

IDU8E, IDU11E, IDU15E

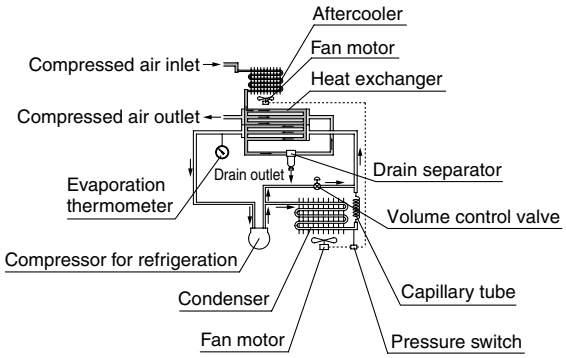

Dimensions

IDU3E to IDU6E

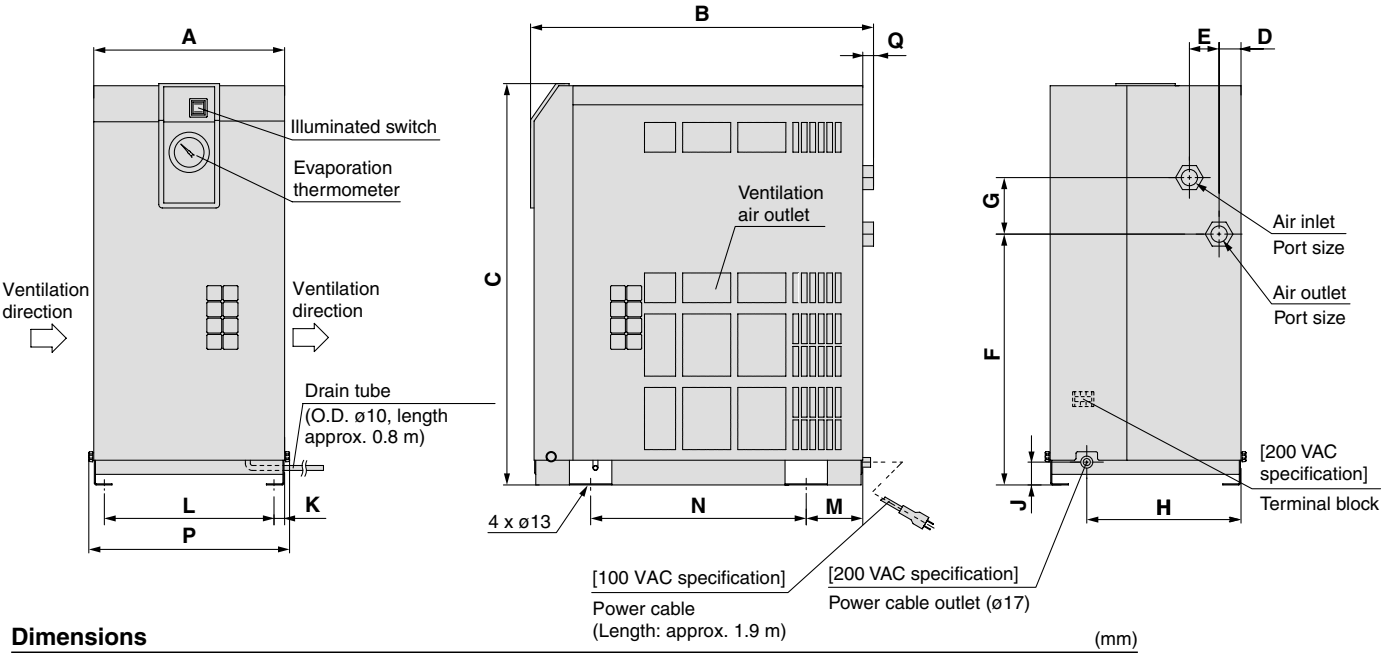

Dimensions (mm)

Model	Port size	A	B	C	D	E	F	G	H	J	K	L	M	N	P	Q
IDU3E	Rc 3/8	270	455	498	31	42	283	80	230	32	15	240	80	275	284	15
IDU4E	Rc 1/2		483	568			355							300		13
IDU6E	Rc 3/4		485													15

IDU8E to IDU15E

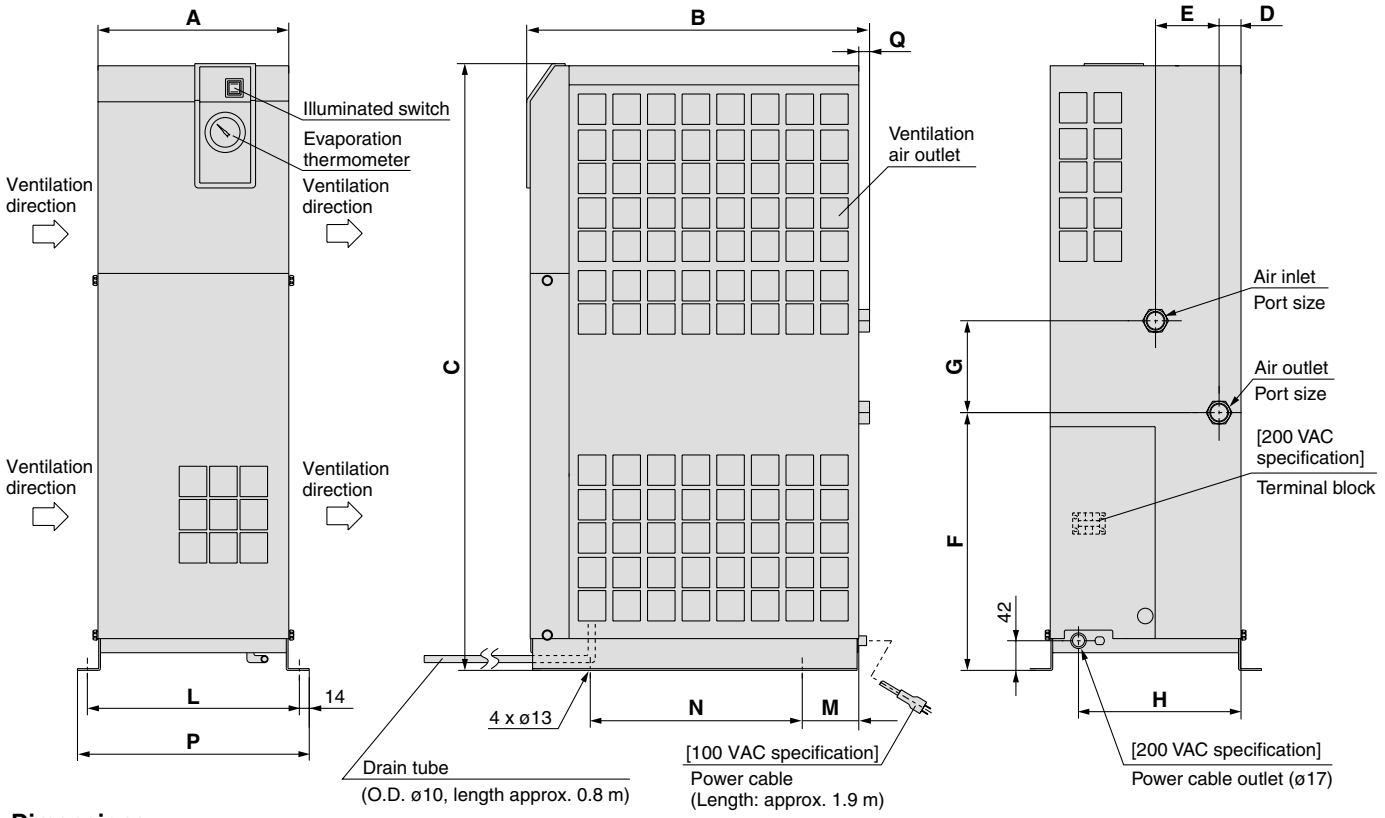

Dimensions (mm)

Model	Port size	A	B	C	D	E	F	G	H	L	M	N	P	Q
IDU8E	Rc 3/4	270	485	859	31	90	365	130	230	300	80	300	328	15
IDU11E				909										
IDU15E	Rc 1	300	620	960	79	54	425	93	258	330	66	470	358	16

Refrigerant R407C (HFC)
High Temperature Air Inlet
Series IDU□E
22E, 37E, 55E, 75E
(Inlet air temperature: 55°C, Outlet air pressure dew point: 10°C)

How to Order

IDU 22 E — 30 — Nil / C / L / M / R / T / V

Size

Size	Air compressor size Note)
22	22 kW
37	37 kW
55	55 kW
75	75 kW

Note) Please note that the above values are for reference only. Therefore, check the actual compressor capacity.

Voltage

Symbol	Voltage
23	Single-phase 230 VAC (50 Hz)
30	Three-phase 200 VAC (50 Hz) 200/220 VAC (60 Hz)

Option

Symbol Note 1) / Option / Size	Nil	C	L	M	R	T	V
	None	Anti-corrosive treatment	With heavy duty auto drain (applicable to medium air pressure)	With motor type auto drain (Voltage symbol 30 only)	With circuit breaker	With terminal block for run and alarm signal	Timer type solenoid valve with auto drain (Voltage symbol 23 only) (applicable to medium air pressure)
22	●	●	●	●	●	●	●
37	●	●	●	●	●	●	●
55	●	●	●	●	●	●	●
75	●	●	●	●	●	●	●

Note 1) Enter alphabetically when multiple options are combined.
However, the following combinations are not possible.
• Combination of L, M and V are not possible because an auto drain can only be attached to a single option.
Note 2) Refer to pages 42 through to 45 for further information on options.

Standard Specifications

Specifications \ Model				High temperature air inlet			
				IDU22E	IDU37E	IDU55E	IDU75E
Operating ranges	Fluid			Compressed air			
	Inlet air temperature (°C)			5 to 80			
	Inlet air pressure (MPa)			0.15 to 1.0			
	Ambient temp. (humidity) (°C)			2 to 40 (Relative humidity of 85% or less)			
Rated conditions Note 3)	Air flow capacity (m^3/min)	Standard condition (ANR) Note 1)	50 Hz	3.9	5.7	8.4	11.0
			60 Hz	4.3	6.1	9.8	12.5
		Compressor intake condition Note 2)	50 Hz	4.1	5.9	8.7	11.5
			60 Hz	4.5	6.4	10.2	13.0
	Inlet air pressure (MPa)			0.7			
	Inlet air temperature (°C)			55			
	Ambient temperature (°C)			32			
	Outlet air pressure dew point (°C)			10			
Electric specifications	Power supply voltage (frequency)			Three-phase: 200 VAC (50 Hz) Three-phase: 200/220 VAC (60 Hz)			
	Power consumption (W) 50/60 Hz	Three-phase 200 V		1100/1450		1530/2000	2200/2850
		Single-phase 230 V (50 Hz)		960	1600		2300
	Operating current (A) 50/60 Hz	Three-phase 200 V		4.2/4.8		6.3/6.8	8.2/9.3
		Single-phase 230 V (50 Hz)		4.3	7.5		10.7
Applicable circuit breaker capacity (A) Note 4)		Three-phase 200 V		10			15
		Single-phase 230 V (50 Hz)		10			20
Refrigerant				R407C (HFC)			
Auto drain				Float type (Normally open)			
Port size				R 1	R 1 1/2	R 2	
Mass (kg)				90	130	160	166
Coating color				Body panel: White 1 Base: Gray 2			
Applicable air compressor output (Reference) For screw type (kW)				22	37	55	75

Note 1) Air flow capacity under the standard condition (ANR) [atmospheric pressure at 20°C, relative humidity at 65%]
Note 2) Air flow capacity converted by the compressor intake condition [atmospheric pressure at 32°C]
Note 3) Select air dryer according to "Model Selection" (pages 24 and 25) for the models beyond the rated specifications.
Note 4) Install a circuit breaker with a sensitivity of 30 mA.

JIS Symbol

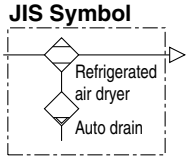

Replacement Parts

Model	IDU22E	IDU37E	IDU55E	IDU75E
Auto drain replacement parts no. Note 5)	AD48			

Note 5) The part number for the auto drain components without including the body part.
Body part replacement is impossible.

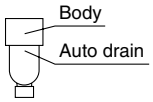

Construction Principle (Air/Refrigerant Circuit)

Humid, hot air coming into the air dryer will be cooled down by a heat exchanger. Water condensed at this time will be removed from the air by a drain separator and drained out automatically. Air separated from the water will be heated by a heat exchanger to obtain the dried air, which goes through to the outlet side.

IDU22E, IDU37E, IDU55E, IDU75E

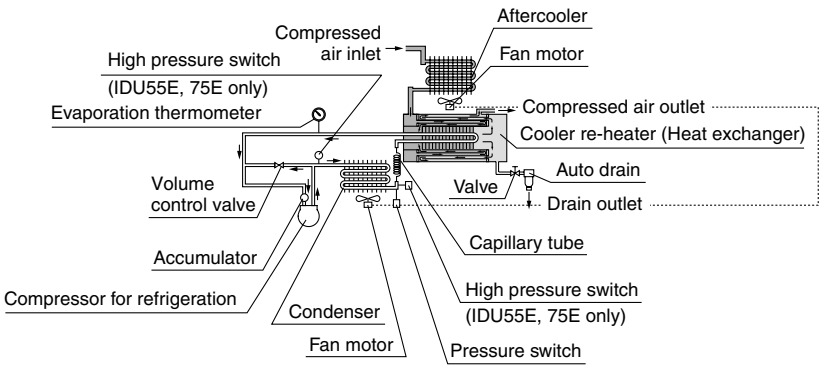

Dimensions

IDU22E to 75E

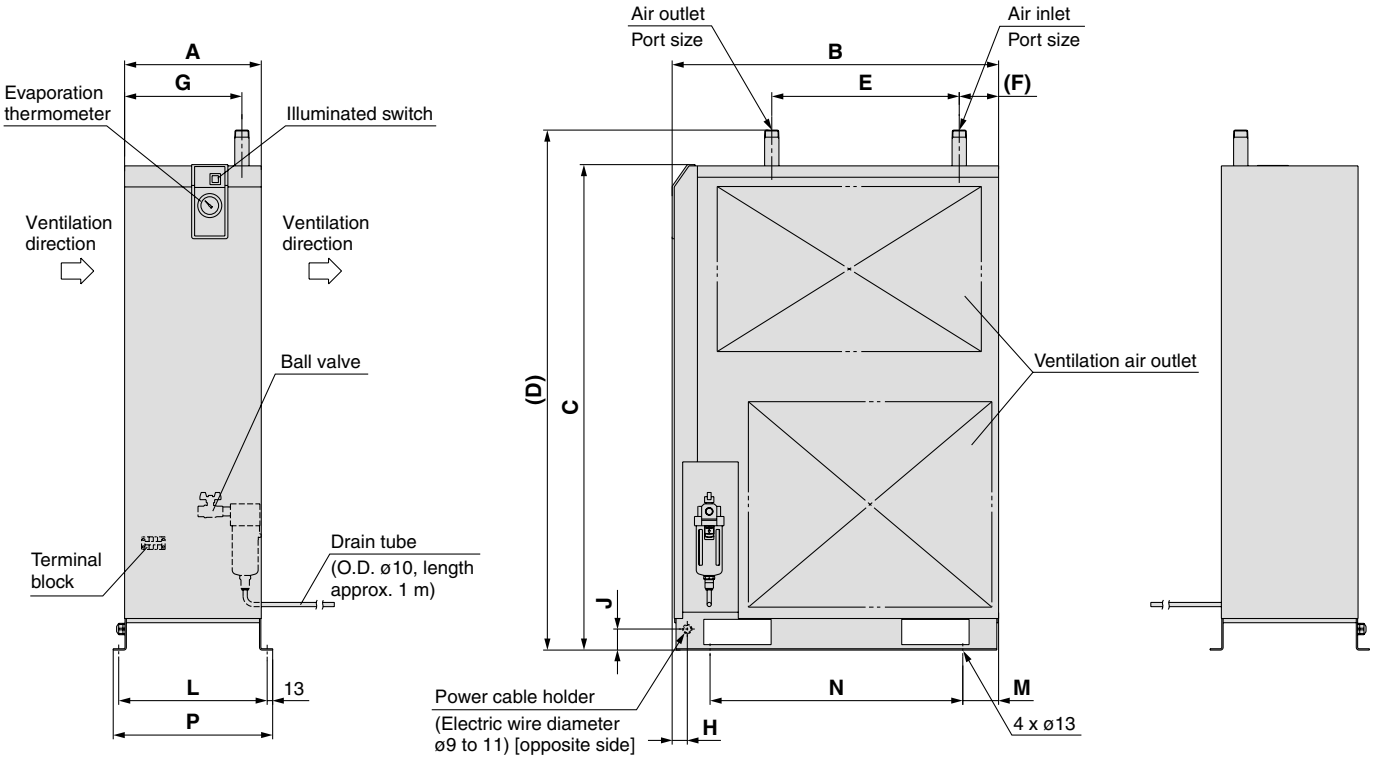

Dimensions (mm)

Model	Port size	A	B	C	D	E	F	G	H	J	L	M	N	P
IDU22E	R 1	325	775	1153	1235	445	93	279	46	50	353	85	600	379
IDU37E	R 1 1/2	360	855	1258	1350	550	64	290			388		680	414
IDU55E	R 2	470		1345	1440	530	53	360	30		500	75	700	526
IDU75E				1480	1575					70				

Options 1

Refer to "How to Order" pages 26, 30, 33, 36 and 39 for optional models.

A Option symbol
Cool compressed air output

IDF□E all models

Cool outlet air (10°C) can be supplied.
The air flow with this option is smaller than that of the standard dryer. (Refer to the below table.)
If the dryer is used out of the scope of the rated specifications or conditions, select a model according to pages 24 and 25 and apply the air flow capacity shown in the tables below to the data E.

Note 1) Perform thermal insulation treatment for pipings and equipment installed after the dryer to prevent the formation of condensation.
Note 2) The option A cannot be used for the IDF120D to 370B and the IDU series due to the construction of the heat exchanger unit.

Air Flow Capacity

Model		IDF1E	IDF2E	IDF3E	IDF4E
Air flow capacity m^3/min (ANR)	50 Hz	0.085	0.12	0.18	0.26
	60 Hz	0.1	0.14	0.21	0.29

Model		IDF6E	IDF8E	IDF11E	IDF15E
Air flow capacity m^3/min (ANR)	50 Hz	0.32	0.5	0.65	1.2
	60 Hz	0.375	0.55	0.75	1.3

Model		IDF22E	IDF37E	IDF55E	IDF75E
Air flow capacity m^3/min (ANR)	50 Hz	1.7	2.6	3.85	5.35
	60 Hz	1.9	3.05	4.5	6.2

(Rated specification/Conditions): Inlet air pressure: 0.7 MPa, Inlet air temperature: 35°C (IDF1E to 37E), 40°C (IDF55E, 75E)
Outlet air temperature: 10°C

C Option symbol
Anti-corrosive treatment

IDF, IDU all models

This minimizes the corrosion of the copper and copper alloy parts when the air dryer is used in an atmosphere containing hydrogen sulfide or sulfurous acid gas. (Corrosion cannot be completely prevented.)
Special epoxy coating: Copper tube and copper alloy parts.
The coating is not applied on the heat exchanger or around electrical parts, where operation may be affected by the coating.

∗ Corrosion is not covered under warranty.

Note) X204 is compatible with the IDF370B.

K Option symbol
For medium air pressure (Auto drain bowl: Metal bowl with level gauge)

IDF6E to 37E, IDU3E to 15E

The maximum operating pressure is 1.6 MPa (1.4 MPa for the IDU15E).
The auto drain is changed from the standard one to one with a medium pressure specification.
A metal bowl with a level gauge which can confirm the water level is used for the auto drain.

Specifications

1. Maximum operating pressure: 1.6 MPa
   1.4 MPa (IDU15E only)
2. Dimensions ··· same as standard products

Replacement Parts

Model	Auto drain replacement parts no.	Note
IDF6E to 37E IDU3E to 11E	IDF-S0086	Assembly of Auto drain: AD48-8-X2110, One-touch fitting: KQ2H10-02S, Insulator
IDU15E	IDF-S0130	Assembly of Bowl assembly: AMG-CA450-D-X20, One-touch fitting: KQ2H10-02S, Insulator

L Option symbol
With heavy duty auto drain (applicable to medium air pressure)

IDF4E to 75E, IDU3E to 11E IDU22E to 75E

Drainage including dust can also be exhausted.
The float type auto drain used in the standard air dryer is replaced with a heavy duty auto drain (ADH4000-04).

Note) The option L for the IDU15E has the max. operating pressure of 1.4 MPa and includes the mounting frame.

Dimensions (mm)

Model	A	B
IDF4E	55	348
IDF6E, IDU3E	67	
IDF8E, IDF11E	139	378
IDU4E, IDU6E		
IDU8E, IDU11E	149	
IDF15E	47	494

Max. operating pressure: 1.6 MPa

IDF4E to 15E
IDU3E to 11E

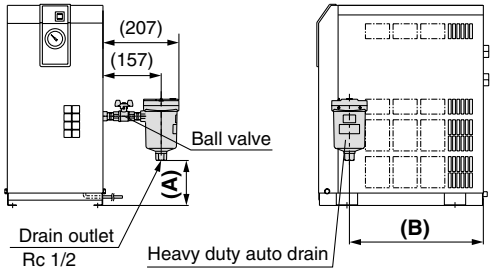

Note 1) The heavy duty auto drain and the ball valve are both enclosed in the same shipping package as the main body of the air dryer. The customer is required to mount the parts to the air dryer.
Note 2) The customer will need to supply the fitting no. KQ2L10-04S and tubing no. TU1065BU for the drain piping.

IDF22E to 75E, IDU22E to 75E

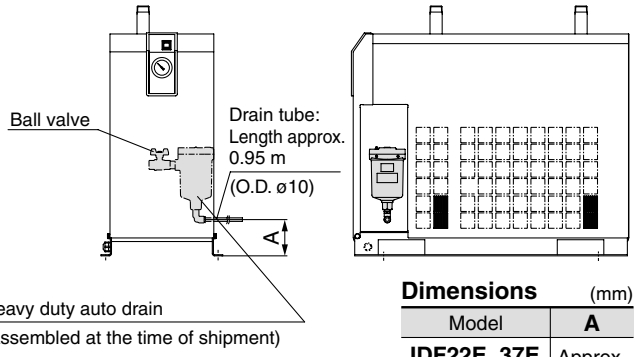

Dimensions (mm)

Model	A
IDF22E, 37E IDU22E, 37E	Approx. 100
IDF55E, 75E IDU55E	Approx. 120
IDU75E	Approx. 250

IDF370B

X205 is compatible with the IDF370B.
For the IDF370B option "X205," the maximum operating pressure is 0.97 MPa.

Replacement Parts: Heavy Duty Auto Drain

Model	Replacement parts no. (Description)	Configuration
IDF4E to 15E IDU3E to 11E	ADH4000-04 (Heavy duty auto drain)	Heavy duty auto drain
IDF22E to 75E IDU22E to 75E	ADH-E400 (Exhaust mechanism replacement kit)	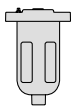 Exhaust mechanism replacement kit 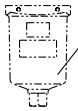 Housing A mounted unit is used

Options 2

Refer to "How to Order" pages 26, 30, 33, 36 and 39 for optional models.

M Option symbol

With motor type auto drain

Except IDF1E, 2E, 3E

The float type auto drain used in the standard air dryer is replaced with a motor type auto drain (ADM200).

Air Discharge

Operating air pressure	Air discharge without drainage
0.3 MPa	0.006 m^3/time (ANR)
0.5 MPa	0.010 m^3/time (ANR)
0.7 MPa	0.014 m^3/time (ANR)

Note) The motor type auto drain operates 1 time (for 2 seconds) per minute.

IDF4E to 15E
IDU3E to 15E

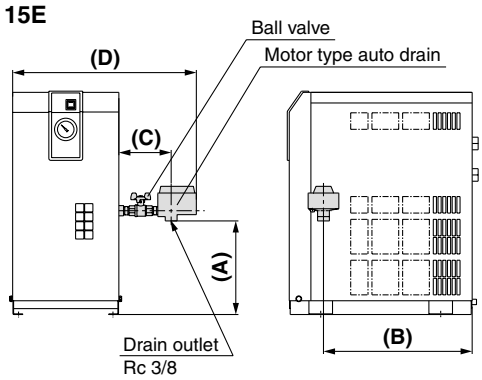

Dimensions (mm)

Model	A	B	C	D
IDF4E	154	348	133	474
IDF6E, IDU3E	166			
IDF8E, 11E	238	378		
IDU4E, 6E				
IDU8E, 11E	288			496
IDF15E	149	494	146	510
IDU15E	65	442	137	530

Note 1) The motor type auto drain and the ball valve are both enclosed in the same shipping package as the main body of the air dryer. The customer is required to mount the auto drain to the air dryer.
Note 2) The customer will need to supply the fitting no. KQ2L10-03S and tubing no. TU1065BU for the drain piping.

IDF22E to 75E
IDU22E to 75E

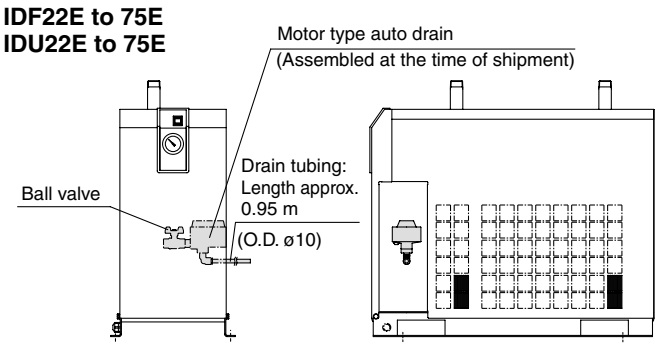

Note) If you require a longer drain tube than the one that is supplied, remove the attached tube and replace it with a longer tube, which should be prepared by the customer. (The fitting connection may prevent drainage from flowing due to a drop in pressure.)

IDF120D to 240D

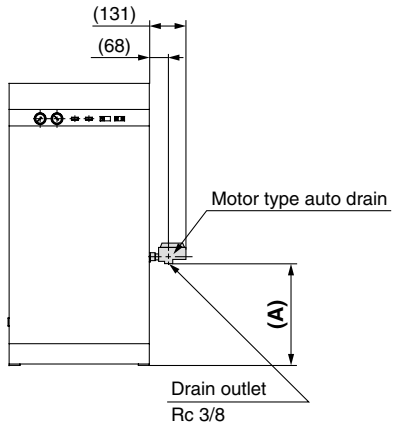

Note) The motor type auto drain is both enclosed in the same shipping package as the main body of the air dryer. The customer is required to mount the auto drain to the air dryer.

Dimensions (mm)

Model	A
IDF120D	464
IDF150D	464
IDF190D	526
IDF240D	565

Replacement Parts: Motor Type Auto Drain Assembly Note)

Voltage	Replacement parts no.	Note
Single-phase 100 VAC (50 Hz) 100/110 VAC (60 Hz)	IDF-S0087	Motor type auto drain: ADM200-041 Plug housing assembly: 173090-2 Receptacle: 173707-1 Rubber plug: Assembly of 172888-2
Single-phase 200 VAC (50 Hz) Three-phase 200/220 VAC (60 Hz)	IDF-S0090	Motor type auto drain: ADM200-042 Plug housing assembly: 173090-2 Receptacle: 173707-1 Rubber plug: Assembly of 172888-2

Note) Including electric wire with connector on the end.

Options 3

Refer to "How to Order" pages 26, 30, 33, 36 and 39 for optional models.

R Option symbol

With circuit breaker

Except IDF1E, 2E, 3E

A circuit breaker with cover is attached to the side of the air dryer. This saves additional electrical wiring at the time of installation. (The IDF370B does not include the electrical leakage detection function.)

IDF4E to 15E
IDU3E to 15E

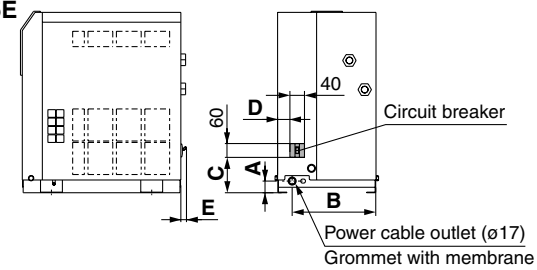

Dimensions (mm)

Model	A	B	C	D	E
IDF4E, 6E, 8E, 11E	32	230	97	34	15
IDF15E	43	258	102	82	—
IDU3E, 4E, 6E	32	230	97	34	15
IDU8E	42		100	37	—
IDU11E				75	
IDU15E	43	258		84	

IDF22E to 75E
IDU22E to 75E

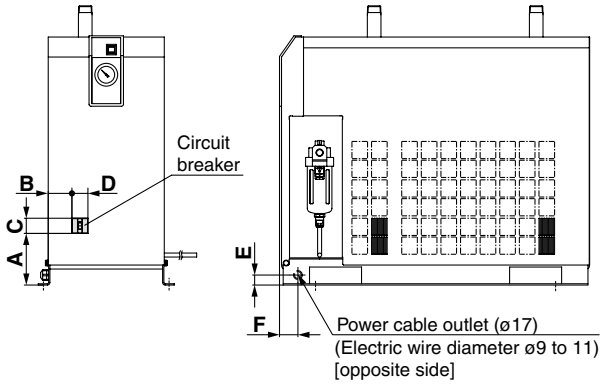

Dimensions (mm)

Model	A	B	C	D	E	F
IDF22E-20	125	59	60	40	25	46
IDF37E-20						
IDF22E-30		39		60		
IDF37E-30						
IDF55E-30	148	81			50	36
IDF75E-30	133	73				
IDU22E-30	151	74	60	60	50	46
IDU37E-30	146	122				
IDU55E-30	148	55				36
IDU75E-30	166	73			70	

IDF120D to 240D

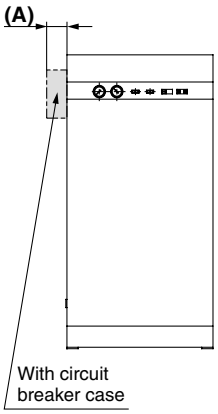

IDF370B

Note) The IDF370B is available with X202.

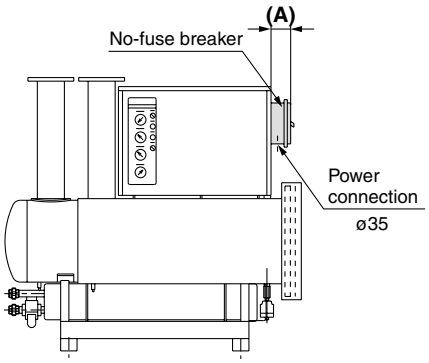

Dimensions (mm)

Model	A
IDF120D	69
IDF150D	94
IDF190D	95
IDF240D	
IDF370B	156

Breaker Capacity and Sensitivity Current

Voltage	Model	Breaker capacity	Sensitivity current
100 V type	IDF4E-10, IDF6E-10 IDF8E-10, IDF11E-10, IDF15E-10	10 A	30 mA
	IDU3E-10, IDU4E-10, IDU6E-10 IDU8E-10, IDU11E-10, IDU15E-10		
200 V type	IDF4E-20, IDF6E-20 IDF8E-20, IDF11E-20	5 A	
	IDU3E-20, IDU4E-20 IDU6E-20, IDU8E-20, IDU11E-20		
	IDF15E-20, IDF22E-20, IDF37E-20 IDU15E-20 IDF22E-30, IDF37E-30 IDF55E-30 IDU22E-30, IDU37E-30, IDU55E-30	10 A	
	IDF75E-30, IDU75E-30	15 A	
	IDF120D	30 A	
	IDF150D	45 A	
	IDF190D	60 A	
	IDF240D	75 A	
	IDF370B	80 A	—

Options 4

Refer to "How to Order" pages 26, 30, 33, 36 and 39 for optional models.

S Option symbol

Power supply terminal block connection

IDF1E-10 to 15E-10, IDU3E-10 to IDU15E-10

The option allows the connection of a power cable to a terminal block. 200 V specification is equipped as standard.

IDF1E-10 to 3E-10

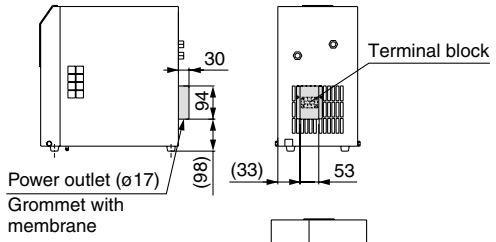

IDF4E-10 to 15E-10
IDU3E-10 to 15E-10

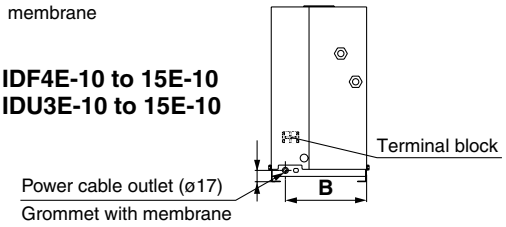

Dimensions (mm)

Model	A	B
IDF4E, 6E, 8E, 11E	32	230
IDF15E	43	258
IDU3E, 4E, 6E	32	230
IDU8E, 11E	42	230
IDU15E	43	258

T Option symbol

With terminal block for power supply, run, alarm signal and remote operation

IDF4E to 15E, IDU3E to 15E

Besides terminals for the power supply, terminals for the operating signal and the error signal are also available. (No-voltage contact)
Also, in the case of remote control, operate it from the power supply side while the air dryer switch remains ON.

IDF4E to 15E
IDU3E to 15E

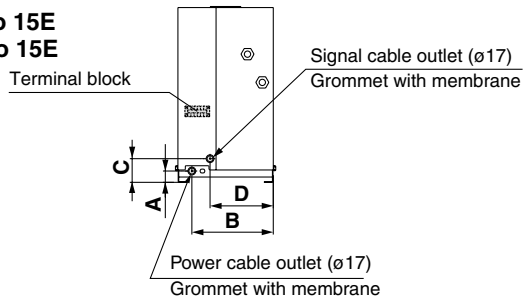

Contact capacity: Operating signal ... 220 VAC, 6 A 24 VDC, 6 A
Error signal ... 220 VAC, 0.5 A

Minimum current value: 24 V, 300 mA (AC/DC) for operating and error signals.

Note) Please be sure to confirm the electric circuits with the drawings or operating manual before using the operating and error signals.

Dimensions (mm)

Model	A	B	C	D
IDF4E, 6E, 8E, 11E	32	230	67	179
IDF15E	43	258	77	158
IDU3E, 4E, 6E	32	230	67	179
IDU8E, 11E	42	230	77	136
IDU15E	43	258	77	158

T Option symbol

With terminal block for power supply, run, alarm signal and remote operation

IDF22E to 75E, IDU22E to 75E

IDF22E to 75E, IDU22E to 75E

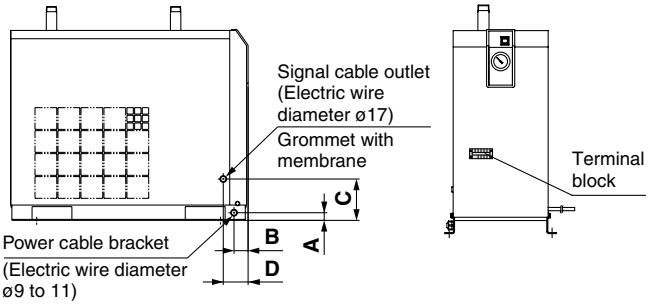

Contact capacity: Operating signal ... 220 VAC, 5 A 24 VDC, 5 A
Error signal ... 220 VAC, 1 A 24 VDC, 0.5 A

Minimum current value: 20 V, 5 mA (AC/DC) for operating and error signals.

Dimensions (mm)

Model	A	B	C	D
IDF22E, 37E	25	46	135	81
IDF55E, 75E	50	36	207	
IDU22E, 37E	50	46	166	
IDU55E		36	230	
IDU75E	70		242	

Options 5

Refer to "How to Order" pages 26, 30, 33, 36 and 39 for optional models.

V Option symbol

Timer type solenoid valve with auto drain (applicable to medium air pressure)

IDU3E to 75E

Drainage is discharged by controlling a solenoid valve with a timer.
A strainer for solenoid valve protection and stop valve are also included.

Maximum operating pressure: 1.6 MPa
1.4 MPa (IDU15E only)

∗ The timer type solenoid valve actuates once (for 0.5 seconds) every 30 seconds.

Replacement Parts

Model	Part no.	Note
IDU3E to 37E-23	IDF-S0198	230 VAC
IDU55E, 75E-23	IDF-S0302	

W Option symbol

Water-cooled condenser

IDF120D to 240D

It can be used in a high temperature environment (max. 43°C) without decreasing air flow capacity. It can also be used in an enclosed environment without increasing the ambient temperature. The IDF370B has this option as standard.

Model	IDF120D	IDF150D	IDF190D	IDF240D
Condenser	Shell and tube type			
Cooling water flow (ℓ/min) Note 1)	50	65	80	90
Cooling tower performance (RT) Note 2)	5	7.5	7.5	7.5
Water flow regulator	Pressure type automatic water supply valve			
Fluid port size	R 1			

Note 1) Value when cooling water inlet temperature is 32°C and with rated load
Note 2) Calculated at 1 RT = 3,300 kcal/h

Dimensions

(mm)

Model	A	B	C	D	E
IDF120D IDF150D	180	250	160	90	225
IDF190D IDF240D	180	250	160	48	273

IDF120D to 240D

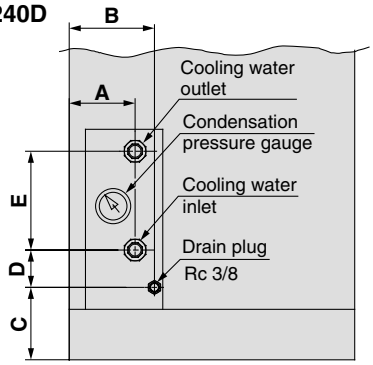

Optional Accessories

Specifications

Description	Features	Specifications	Applicable dryer	Dimensions
Separately installed power transformer Note 1), 2)	Power supply and voltage for those other than the standard.	Max. ambient temperature 40°C (Relative humidity 85% or less)	IDF1E to 10 to IDF15E-10, IDF22E-20/30 IDF37E-20/30, IDF55E-30, IDF75E-30 IDU3E-10 to 15E-10, IDU22E to 75E-30 IDF120D to 240D-3, IDF370B-603	Page 49, 50
Dedicated base for separately installed power transformer Note 2) [Separately installed power transformer is not attached. Order separately.]	A dedicated base for integrating the separately installed power transformer and the air dryer.	—	IDF4E to 15E-10 IDF22E-20/30, IDF37E-20/30 IDF55E-30, IDF75E-30 IDU3E to 15E-10	Page 51
Dust-protecting filter set	Prevents a decline in the performance of an air dryer, even in a dusty atmosphere.	Max. ambient temperature 40°C	IDF1E to 75E IDF120D to 240D IDU3E to 75E	Page 52
Bypass piping set	Easy bypass piping (connect this set to the air dryer), allowing substantial reduction in the installation time.	Max. operating pressure Note 3) 1.0 MPa Max. operating temperature IDF: 60°C IDU: 80°C	IDF1E to 75E IDU3E to 75E	Page 53, 54
Foundations bolt set	Bolts for fixing the air dryer to the foundations. Easy to secure by striking the axle.	Stainless steel	IDF4E to 75E IDU3E to 75E	Page 54
Piping adapter	Adapter which converts the thread type of an IN/OUT fitting for an air dryer.	Copper alloy	IDF1E to 75E IDU3E to 75E	

Note 1) If the power transformer is used for the IDF1E to 15E and IDU3E to 15E, select the dryer of 100 V.
Note 2) If using a power transformer with the IDF120D to 240D, a built-in power transformer type is also available. (Refer to "How to Order" on page 33.)
Note 3) Not applicable to the medium air pressure specification. Prepare a bypass piping set suitable for the specification.

How to Order

[Separately installed power transformer]
Single-phase type

IDF — TR 500 — 2

Capacity

Symbol	Applicable dryer	Capacity
500	IDF1E-10 to IDF8E-10 IDU3E-10, IDU4E-10, IDU8E-10	500 VA
1000	IDF11E-10, IDF15E-10 IDU6E-10, IDU11E-10, IDU15E-10	1 kVA
2000	IDF22E-20, IDF37E-20	2 kVA

Power supply voltage

Symbol	Inlet voltage	Outlet voltage	Type
1	110 VAC (50 Hz) 110 to 120 VAC (60 Hz)	100 VAC (50 Hz) 100, 110 VAC (60 Hz)	Single-phase
2	200, 220, 230, 240 VAC (50 Hz) 200 to 260 VAC (60 Hz)		
3	380, 400, 415 VAC (50 Hz) 380 to 420 VAC (60 Hz)		
4	420, 440, 480 VAC (50 Hz) 420 to 520 VAC (60 Hz)		
9	220 VAC (50 Hz) 220 to 240 VAC (60 Hz)	200 VAC (50 Hz) 200, 220 VAC (60 Hz)	Single-phase
10	380, 400, 415 VAC (50 Hz) 380 to 400, 400 to 415, 415 to 440 VAC (60 Hz)		
11	440, 460 VAC (50 Hz) 440 to 460, 460 to 500 VAC (60 Hz)		

Note) Refer to pages 49 and 50 for dimensions.

Three-phase type

IDF — TR 1700 — 5

Capacity

Symbol	Applicable dryer	Capacity
1700	IDF22E-30, IDF37E-30 IDU22E-30, IDU37E-30	1.7 kVA
4000	IDF55E-30, IDF75E-30 IDU55E-30, IDU75E-30	4 kVA
7000	IDF120D	7 kVA
9000	IDF150D	9 kVA
14000	IDF190D, 240D	14 kVA
18000	IDF370B	18 kVA

Power supply voltage

Symbol	Inlet voltage	Outlet voltage	Type
5	220 VAC (50 Hz) 220 to 240 VAC (60 Hz)	200 VAC (50 Hz) 200, 220 VAC (60 Hz)	Three-phase
6	380, 400, 415 VAC (50 Hz) 380 to 440 VAC (60 Hz)		
7	440, 460 VAC (50 Hz) 440 to 500 VAC (60 Hz)		
8	220, 240, 380, 400, 415, 440 VAC (50/60 Hz)	200 VAC (50/60 Hz)	

Note) Refer to page 50 for dimensions.

Optional Accessories

How to Order

[Dedicated base for separately installed power transformer]

IDF — TB 403

Size

Symbol	Applicable dryer
403	IDF4E to 11E, IDU3E to 6E
404	IDF15E
405	IDF22E
406	IDF37E
409	IDF55E, IDF75E

Note) Not available for the IDF1E to 3E and IDU22E to 75E.
Refer to page 51 for dimensions.

IDU — TB 407

Size

Symbol	Applicable dryer
407	IDU8E, IDU11E
408	IDU15E

[Dust-protecting filter set]

IDF — FL 201

Applicable dryer

Symbol	Applicable dryer
200 Note)	IDF1E, 2E
201 Note)	IDF3E
202	IDF4E
203	IDF6E, IDU3E
204	IDF8E, IDU4E
205	IDF11E, IDU6E
206	IDF15E
207	IDF22E
208	IDF37E
213	IDF55E
214	IDF75E

IDF — FL 120 D

Applicable dryer

Symbol	Applicable dryer
120	IDF120D
150	IDF150D
190	IDF190D
240	IDF240D

Note) In the case of option S, model no. will be different. Consult with SMC separately.
Refer to page 52 for dimensions.

IDU — FL 210

Applicable dryer

Symbol	Applicable dryer
210	IDU8E
211	IDU11E
212	IDU15E
215	IDU22E
216	IDU37E
217	IDU55E
218	IDU75E

[Bypass piping set (Rc, R thread)]

IDF — BP 302

Applicable dryer

Symbol	Applicable dryer	Thread type
300	IDF1E	Rc
301	IDF2E	
302	IDF3E	
303	IDF4E	
304	IDF6E to 11E	
316	IDF15E	
317	IDF22E	R
318	IDF37E	
325	IDF55E	
	IDF75E	

Note) Not applicable to the medium air pressure specification (max. operating pressure 1.6 MPa).
Supplied by customer.

IDU — BP 305

Applicable dryer

Symbol	Applicable dryer
305	IDU3E
306	IDU4E
307	IDU6E
320	IDU8E, IDU11E
322	IDU15E
336	IDU22E
337	IDU37E
338	IDU55E, IDU75E

Note) Refer to pages 53 and 54 for bypass piping set dimensions.

[Foundations bolt set]

IDF — AB 500

Applicable dryer

Symbol	Applicable dryer
500	IDF4E to 75E
	IDU3E to 15E
501	IDU22E to 75E

Note) Refer to page 54 for dimensions.

[Piping adapter]

IDF — AP 601

Applicable dryer

Symbol	Thread type and port size		Applicable dryer
	Male thread side **A**	Female thread side **B**	
601	R 1/2	NPT 1/2	IDF4E, IDU4E
603	R 3/4	NPT 3/4	IDF6E to 11E, IDU6E to 11E
604	NPT 1	Rc 1	IDF22E, IDU22E
605	R 1	NPT 1	IDF15E, IDU15E
606	NPT 1 1/2	Rc 1 1/2	IDF37E, IDU37E
607	NPT 2	Rc 2	IDF55E, 75E, IDU55E, 75E
609	R 3/8	NPT 3/8	IDF1E to 3E, IDU3E

Note) Refer to page 54 for dimensions.

Specifications/Dimensions

[Separately installed power transformer]

IDF-TR□−1

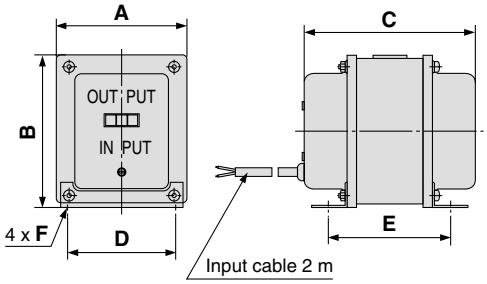

Specifications/Dimensions (mm)

Transformer	Applicable dryer	Capacity	Type	Inlet voltage	Outlet voltage	A	B	C	D	E	F	Mass
IDF-TR500-1	IDF1E-10 to 8E-10 IDU3E-10, 4E-10, 8E-10	500 VA	Single-phase Single-turn	110 VAC (50 Hz) 110 to 120 VAC (60 Hz)	100 VAC (50 Hz) 100, 110 VAC (60 Hz)	78	94	100	64	75	4.2 x 7 (Long hole)	1.5 kg
IDF-TR1000-1	IDF11E-10, 15E-10 IDU6E-10, 11E-10, 15E-10	1 kVA				104	122	134	75	114	4.2 x 9 (Long hole)	4 kg

IDF-TR□−2

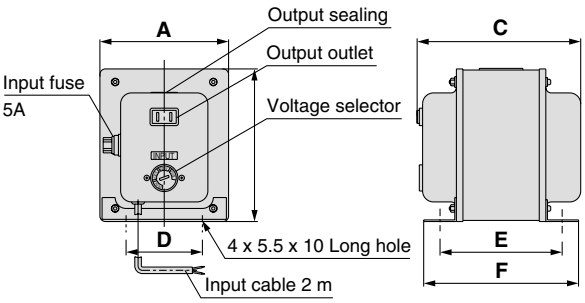

Specifications/Dimensions (mm)

Transformer	Applicable dryer	Capacity	Type	Inlet voltage	Outlet voltage	A	B	C	D	E	F	Mass
IDF-TR500-2	IDF1E-10 to 8E-10 IDU3E-10, 4E-10, 8E-10	500 VA	Single-phase Single-turn	200, 220 230, 240 VAC (50 Hz) 200 to 260 VAC (60 Hz)	100 VAC (50 Hz) 100, 110 VAC (60 Hz)	118	140	163	70	112	142	6 kg
IDF-TR1000-2	IDF11E-10, 15E-10 IDU6E-10, 11E-10, 15E-10	1 kVA						208	90	157	187	10 kg

IDF-TR□−3, 4

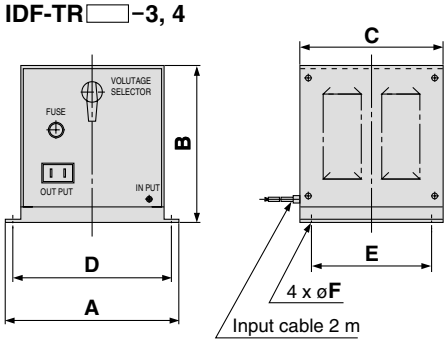

Specifications/Dimensions (mm)

Transformer	Applicable dryer	Capacity	Type	Inlet voltage	Outlet voltage	A	B	C	D	E	F	Mass
IDF-TR500-3	IDF1E-10 to 8E-10 IDU3E-10, 4E-10, 8E-10	500 VA	Single-phase Single-turn	380, 400, 415 VAC (50 Hz) 380 to 420 VAC (60 Hz)	100 VAC (50 Hz) 110 VAC (60 Hz)	230	207	190	210	160	9	15 kg
IDF-TR1000-3	IDF11E-10, 15E-10 IDU6E-10, 11E-10, 15E-10	1 kVA										
IDF-TR500-4	IDF1E-10 to 8E-10 IDU3E-10, 4E-10, 8E-10	500 VA		420, 440, 480 VAC (50 Hz) 420 to 520 VAC (60 Hz)								22 kg
IDF-TR1000-4	IDF11E-10, 15E-10 IDU6E-10, 11E-10, 15E-10	1 kVA										

Optional Accessories

Specifications/Dimensions

[Separately installed power transformer]

IDF-TR1700-5

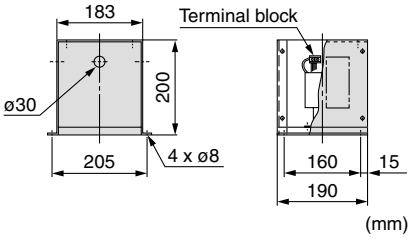

Specifications

Transformer	Applicable dryer	Capacity	Type	Inlet voltage	Outlet voltage	Mass
IDF-TR1700-5	IDF22E-30 IDF37E-30 IDU22E-30 IDU37E-30	1.7 kVA	Three-phase Single-turn	220 VAC (50 Hz) 220 to 240 VAC (60 Hz)	200 V (50 Hz) 200, 220 V (60 Hz)	9 kg

IDF-TR1700-6, 7

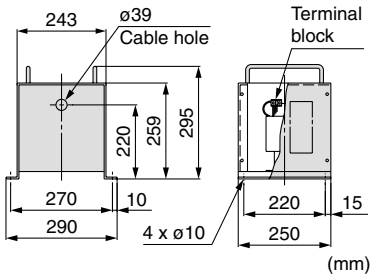

Specifications

Transformer	Applicable dryer	Capacity	Type	Inlet voltage	Outlet voltage	Mass
IDF-TR1700-6	IDF22E-30 IDF37E-30 IDU22E-30 IDU37E-30	1.7 kVA	Three-phase Single-turn	380, 400, 415 VAC (50 Hz) 380 to 400, 400 to 415, 415 to 440 VAC (60 Hz)	200 V (50 Hz) 200, 220 V (60 Hz)	18 kg
IDF-TR1700-7				440, 460 VAC (50 Hz) 440 to 460, 460 to 500 VAC (60 Hz)		

IDF-TR2000-9

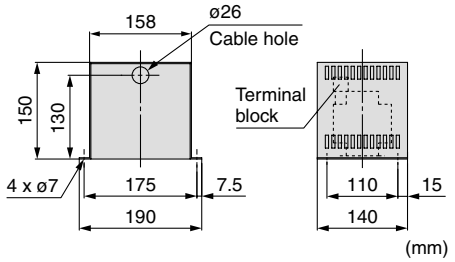

Specifications

Transformer	Applicable dryer	Capacity	Type	Inlet voltage	Outlet voltage	Mass
IDF-TR2000-9	IDF22E-20 IDF37E-20	2 kVA	Single-phase Single-turn	220 VAC (50 Hz) 220 to 240 VAC (60 Hz)	200 VAC (50 Hz) 200, 220 VAC (60 Hz)	5 kg

IDF-TR2000-10, 11

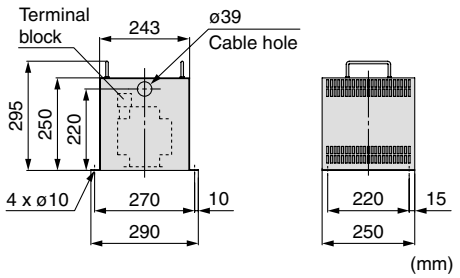

Specifications

Transformer	Applicable dryer	Capacity	Type	Inlet voltage	Outlet voltage	Mass
IDF-TR2000-10	IDF22E-20 IDF37E-20	2 kVA	Single-phase Single-turn	380, 400, 415 VAC (50 Hz) 380 to 400, 400 to 415, 415 to 440 VAC (60 Hz)	200 VAC (50 Hz) 200, 220 VAC (60 Hz)	20 kg
IDF-TR2000-11				440, 460 VAC (50 Hz) 440 to 460, 460 to 500 VAC (60 Hz)		

IDF-TR4000-5, 6, 7

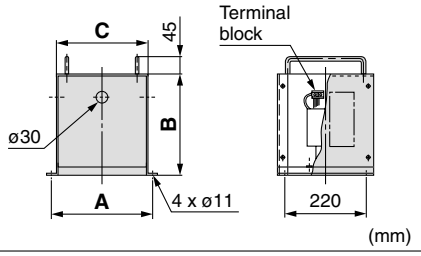

Specifications/Dimensions

Transformer	Applicable dryer	Capacity	Type	Inlet voltage	Outlet voltage	A	B	C	Mass
IDF-TR4000-5	IDF55E-30 IDF75E-30 IDU55E-30 IDU75E-30	4 kVA	Three-phase Single-turn	220 V (50 Hz) 220 to 240 V (60 Hz)	200 V (50 Hz) 200, 220 V (60 Hz)	275	259	240	14 kg
IDF-TR4000-6				380, 400, 415 V (50 Hz) 380 to 400, 400 to 415, 415 to 440 V (60 Hz)	200 V (50 Hz) 200, 220 V (60 Hz)	355	299	320	35 kg
IDF-TR4000-7				440, 460 V (50 Hz) 440 to 460, 460 to 500 V (60 Hz)	200 V (50 Hz) 200, 220 V (60 Hz)	355	299	320	42 kg

IDF-TR□−8

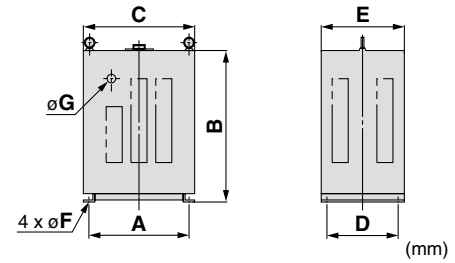

Specifications/Dimensions

Transformer	Applicable dryer	Capacity	Type	Inlet voltage	Outlet voltage	A	B	C	D	E	F	G	Mass
IDF-TR7000-8	IDF120D	7 kVA	Three-phase Double-turn	220, 240, 380, 400, 415, 440 V(50/60 Hz)	200 V (50/60 Hz)	360	540	400	260	300	11	30	94 kg
IDF-TR9000-8	IDF150D	9 kVA				400	650	450	300	350	13	40	109 kg
IDF-TR14000-8	IDF190D, 240D	14 kVA				400	650	450	300	350	13	40	152 kg
IDF-TR18000-8	IDF370B	18 kVA				400	650	450	300	350	13	40	179 kg

Dimensions

[Dedicated base for separately installed power transformer]
IDF4E to 75E
IDU3E to 15E

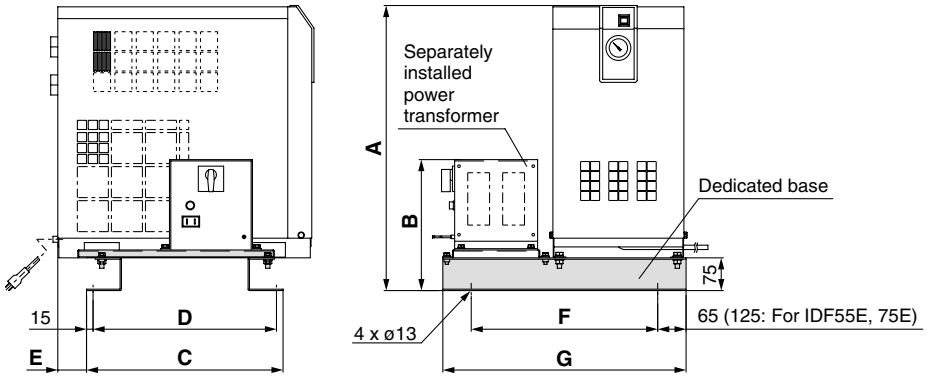

IDF-TB□/Dimensions

(mm)

Part no.	Applicable dryer	Applicable transformer	A	B	C	D	E	F	G	Unit mass (kg)	Reference mass (including air dryer and transformer) (kg)
IDF-TB403	IDF4E-10	IDF-TR500-1	573	171	345	315	45	385	515	6	29.5
		IDF-TR500-2		217							34
		IDF-TR500-3		284							43
		IDF-TR500-4									50
	IDF6E-10 IDU3E-10	IDF-TR500-1		171							30.5
		IDF-TR500-2		217							35
		IDF-TR500-3		284							44
		IDF-TR500-4									51
	IDF8E-10 IDU4E-10	IDF-TR500-1	643	171	370	340					34.5
		IDF-TR500-2		217							39
		IDF-TR500-3		284							48
		IDF-TR500-4									55
	IDF11E-10 IDU6E-10	IDF-TR1000-1		199							38
		IDF-TR1000-2		217							44
		IDF-TR1000-3		284							49
		IDF-TR1000-4									56
IDF-TB404	IDF15E-10	IDF-TR1000-1	653	215	450	420	66	427	557	7	57
		IDF-TR1000-2		233							63
		IDF-TR1000-3		300							68
		IDF-TR1000-4									75
IDF-TB405	IDF22E-30	IDF-TR1700-5	773	300	630	600	70	675	805	12	75
		IDF-TR1700-6, 7		352							84
	IDF22E-20	IDF-TR2000-9		243							71
		IDF-TR2000-10, 11		343							86
IDF-TB406	IDF37E-30	IDF-TR1700-5		300	710	680				13	84
		IDF-TR1700-6, 7		352							93
	IDF37E-20	IDF-TR2000-9		243							80
		IDF-TR2000-10, 11		343							95
IDF-TB409	IDF55E-30	IDF-TR4000-5	943	397	730	750	60		925	15	129
		IDF-TR4000-6		437							150
		IDF-TR4000-7									157
	IDF75E-30	IDF-TR4000-5	1043	397							145
		IDF-TR4000-6		437							166
		IDF-TR4000-7									173

IDU-TB□/Dimensions

(mm)

Part no.	Applicable dryer	Applicable transformer	A	B	C	D	E	F	G	Unit mass (kg)	Reference mass (including air dryer and transformer) (kg)
IDU-TB407	IDU8E-10	IDF-TR500-1	934	171	370	340	45	475	605	6	51.5
		IDF-TR500-2		217							56
		IDF-TR500-3		284							65
		IDF-TR500-4									72
	IDU11E-10	IDF-TR1000-1	984	199							57
		IDF-TR1000-2		217							63
		IDF-TR1000-3		284							68
		IDF-TR1000-4									75
IDU-TB408	IDU15E-10	IDF-TR1000-1	1035	215	540	510	31	487	617	10	85
		IDF-TR1000-2		233							91
		IDF-TR1000-3		300							96
		IDF-TR1000-4									103

Optional Accessories

Dimensions

[Dust-protecting filter set]

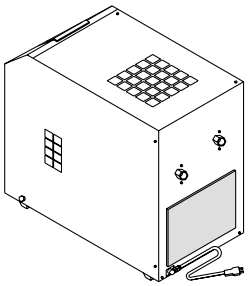

(IDF-FL200, 201)

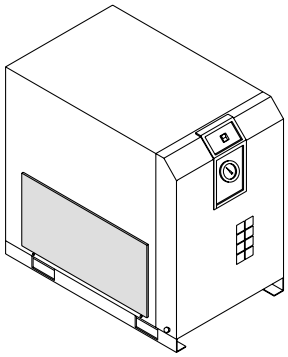

(IDF-FL202 to 214)

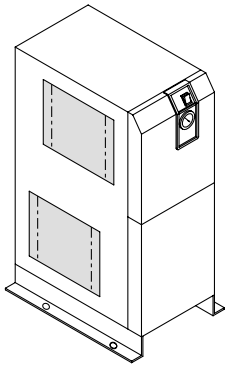

(IDU-FL210 to 218)

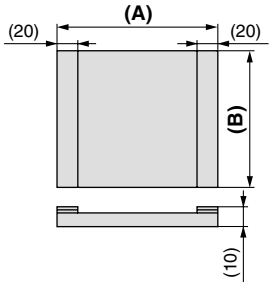

Dimensions (mm)

Part no.	Applicable dryer	A	B	Mass (g)
IDF-FL200	IDF1E, 2E	220	150	20
IDF-FL201	IDF3E		200	30
IDF-FL202	IDF4E	310	195	45
IDF-FL203	IDF6E, IDU3E	375		55
IDF-FL204	IDF8E, IDU4E	340	265	70
IDF-FL205	IDF11E, IDU6E	375		75
IDF-FL206	IDF15E	310	270	70
IDF-FL207	IDF22E	420	315	100
IDF-FL208	IDF37E	550	365	140
IDF-FL213	IDF55E	720	400	175
IDF-FL214	IDF75E	610	560	190

∗ A filter set for the IDF-FL200 to 214 consists of 1 filter.

Dimensions (mm)

Part no.	Applicable dryer	A	B	Mass (g)
IDU-FL210	IDU8E	375	265	75
		375	265	75
IDU-FL211	IDU11E	375	265	75
		360	320	90
IDU-FL212	IDU15E	310	270	70
		440	375	120
IDU-FL215	IDU22E	420	315	100
		555	415	170
IDU-FL216	IDU37E	550	365	140
		580	540	230
IDU-FL217	IDU55E	720	400	175
		735	515	265
IDU-FL218	IDU75E	610	560	190
		735	515	265

∗ A filter set for the IDU-FL210 to 212, 215 to 218 consists of 2 filters.

Dimensions (mm)

Part no.	Applicable dryer	A	B
IDF-FL120D	IDF120D	360	420
		440	420
IDF-FL150D	IDF150D	360	420
		440	420
IDF-FL190D	IDF190D	250	480
		750	480
IDF-FL240D	IDF240D	440	670
		600	670

∗ A filter set for the IDF-FL120D to 240D consists of 4 filters.

Dimensions

[Bypass piping set]
IDF1E to 3E

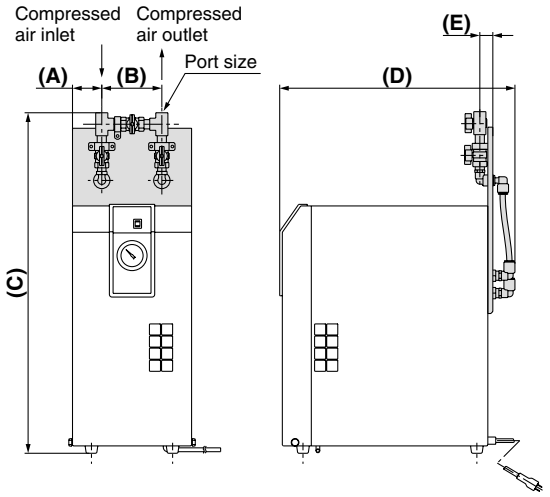

Dimensions (mm)

Part no.	Applicable dryer	Port size Rc	A	B	C	D	E	Mass (kg)
IDF-BP300	IDF1E	3/8	56	114	549	440	21	1.5
IDF-BP301	IDF2E				628	443		1.6
IDF-BP302	IDF3E				642	445		

IDF4E to 15E
IDU3E to 6E

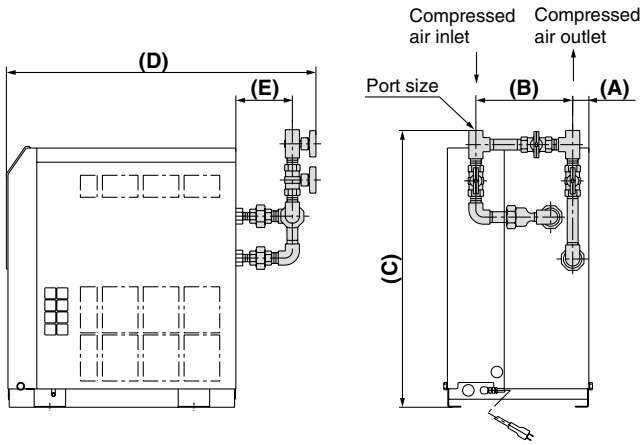

Dimensions (mm)

	Part no.	Applicable dryer	Port size Rc	A	B	C	D	E	Mass (kg)
IDF	IDF-BP303	IDF4E	1/2	31	175	531	595	110	2.3
	IDF-BP304	IDF6E	3/4		187	555	617	129	3.3
		IDF8E				627	647		
		IDF11E							
	IDF-BP316	IDF15E	1	41	210	710	774	136	5.3
IDU	IDU-BP305	IDU3E	3/8	31	202	506	572	100	1.6
	IDU-BP306	IDU4E	1/2		175	603	625	110	2.3
	IDU-BP307	IDU6E	3/4		187	627	647	129	3.3

IDF22E, 37E
IDU22E to 75E

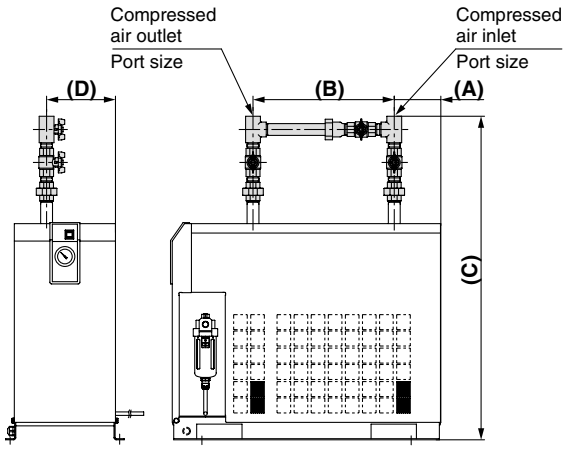

Dimensions (mm)

	Part no.	Applicable dryer	Port size Rc	A	B	C	D	Mass (kg)
IDF	IDF-BP317	IDF22E	1	134	405	928	198	4.4
	IDF-BP318	IDF37E	1 1/2			980		7.7
IDU	IDU-BP336	IDU22E	1	93	445	1465	46	4.5
	IDU-BP337	IDU37E	1 1/2	64	550	1635	70	8.0
	IDU-BP338	IDU55E	2	53	530	1783	110	12.3
		IDU75E				1918		

IDF55E, 75E

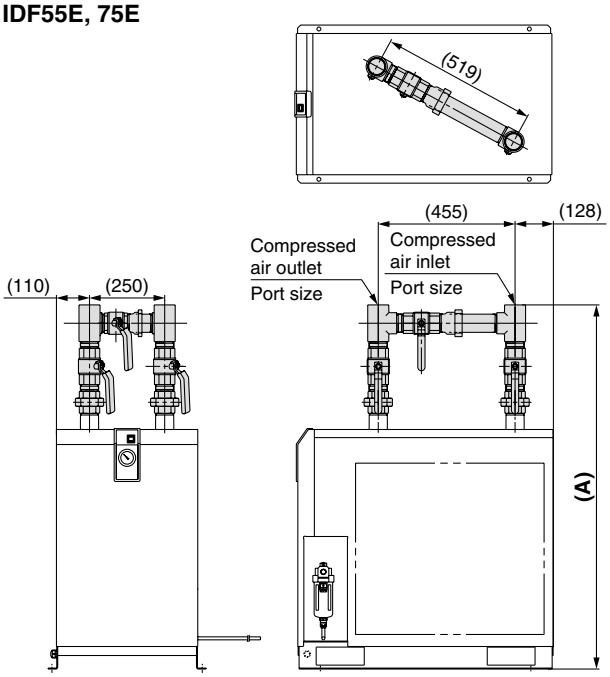

Port size (mm)

Part no.	Applicable dryer	Port size Rc	A	Mass (kg)
IDF-BP325	IDF55E	2	1191	12.3
	IDF75E		1291	

Optional Accessories

Dimensions

[Bypass piping set]
IDU8E to 15E

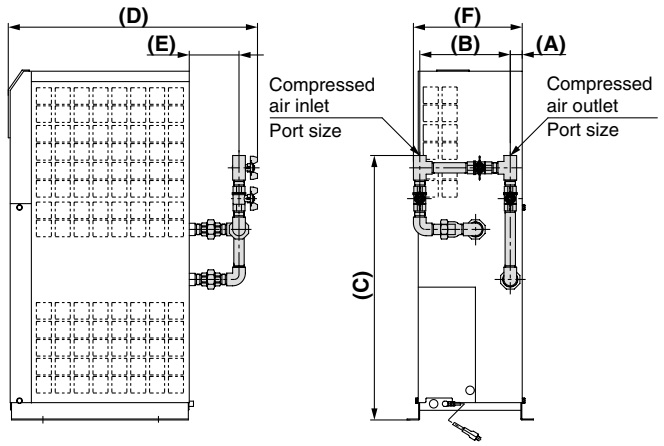

Dimensions (mm)

Part no.	Applicable dryer	Port size Rc	A	B	C	D	E	Mass (kg)
IDU-BP320	IDU8E	3/4	31	210	687	647	129	3.6
	IDU11E							
IDU-BP322	IDU15E	1	79		745	791	136	5.3

[Foundations bolt set]

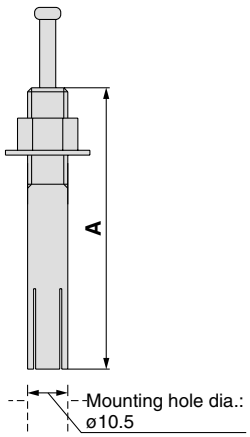

Dimensions (mm)

Part no.	Applicable dryer	Thread nominal size	Material	Number of 1 set	A
IDF-AB500	IDF4E to 75E	M10	Stainless steel	4	50
	IDU3E to 15E				
IDF-AB501	IDU22E to 75E				70

[Piping adapter]

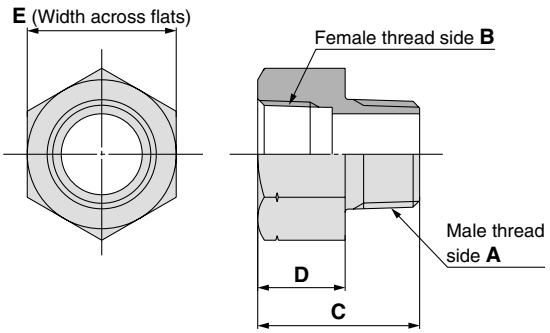

Dimensions (mm)

Part no.	Thread type and port size		Applicable dryer	C	D	E	Material	Number of 1 set
	Male thread side **A**	Female thread side **B**						
IDF-AP601	R 1/2	NPT 1/2	IDF4E IDU4E	38	23	26	Copper alloy	2
IDF-AP603	R 3/4	NPT 3/4	IDF6E to 11E IDU6E to 11E	43	23	32		
IDF-AP604	NPT 1	Rc 1	IDF22E, IDU22E	50	27	46		
IDF-AP605	R 1	NPT 1	IDF15E, IDU15E					
IDF-AP606	NPT 1 1/2	Rc 1 1/2	IDF37E, IDU37E	55	31	54		
IDF-AP607	NPT 2	Rc 2	IDF55E, 75E, IDU55E, 75E	65	35	70		
IDF-AP609	R 3/8	NPT 3/8	IDF1E to 3E IDU3E	30	15	22		

Series IDF/IDU
Specific Product Precautions 1

Be sure to read before handling. Refer to front matters 42 and 43 for Safety Instructions and pages 6 to 8 for Air Preparation Equipment Precautions.

Installation

⚠ Caution

- Avoid locations where the air dryer will be in direct contact with wind and rain. (Places where relative humidity is greater than 85%)
- Avoid exposure to direct sunlight.
- Avoid locations that contain much dust, corrosive gases, or flammable gases. Failure due to corrosion is not covered under warranty. However, when the risk of corrosion is high, select the option C (copper tubing with anti-corrosive treatment).
- Avoid locations of poor ventilation and high temperature.
- Avoid locations where the air dryer is too close to a wall, etc. Leave sufficient room between the dryer and the wall according to the "Maintenance Space" in the operating manual.
- Avoid locations where the air dryer could draw in high temperature air that is discharged from an air compressor or other dryer.

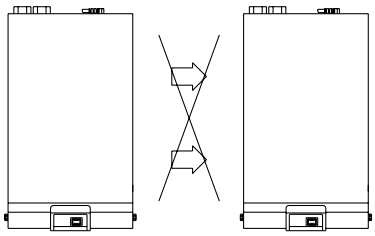

The exhaust air should not flow into the neighboring equipment.

- Avoid locations subjected to vibration.
- Avoid possible locations where the drain can freeze.
- Use the air dryer with an ambient temperature lower than 40°C.
- Avoid installation on machines for transporting, such as vehicles, ships, etc.

Drain Tube

⚠ Caution

- A polyurethane tube is attached as a drain tube for the IDF1E to 75E, IDU3E to 75E. Use this tube to discharge drainage.
- Do not use the drain tube in an upward direction. Do not bend or crush the drain tube. (Operation of the auto drain will stop water vapor from discharging through the air outlet.)
  If it is unavoidable that the tube goes upwards, make sure it only goes as far as the position of the auto drain.

Power Supply

⚠ Caution

<100 VAC>

- Insert the power supply plug to an exclusive 100 VAC power outlet.
- Install a circuit breaker Note 1) suitable to each model for the power supply.
- The voltage fluctuation should be maintained within ±10% of the rated voltage.
- Be sure to ground the power supply prior to use.
- Multiple-branch wiring is dangerous since it causes overheating.
- Do not extend the power cable by using a table tap, etc. A voltage drop may cause the air dryer to stop operating.

Note 1) Select a circuit breaker having a sensitivity current of 30 mA and a rated current of 10 A.

<200 VAC>

- Connect the power supply to the terminal block.
- Install a circuit breaker Note 2) suitable to each model for the power supply.
- The voltage fluctuation should be maintained within ±10% of the rated voltage.

Note 2) Select a circuit breaker with a sensitivity current of 30 mA. As regards rated current, refer to "Applicable circuit breaker capacity" on pages 27 ,31, 34, 37 and 40.

When the voltage used is different than specified for a standard product, use a separately installed power transformer. (page 47)

Specific Product Precautions 2

Be sure to read before handling. Refer to front matters 42 and 43 for Safety Instructions and pages 6 to 8 for Air Preparation Equipment Precautions.

Air Piping

⚠ Caution

- Be careful to avoid an error in connecting the air piping at the compressed air inlet (IN) and outlet (OUT).
- Install bypass piping since it is needed for maintenance.

Use the bypass piping set on pages 53 and 54.

IDF1E to 3E

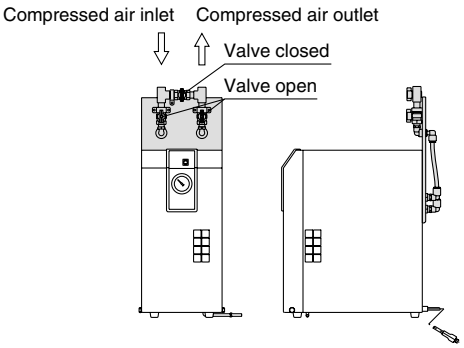

IDF4E to 15E
IDU3E to 15E

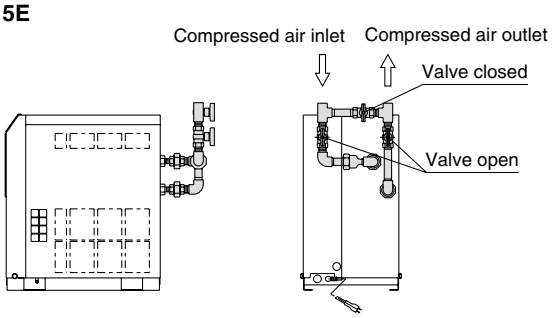

IDF22E, 37E
IDU22E to 75E

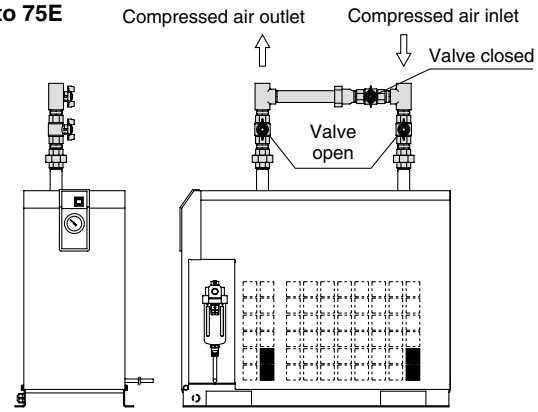

IDF55E, 75E

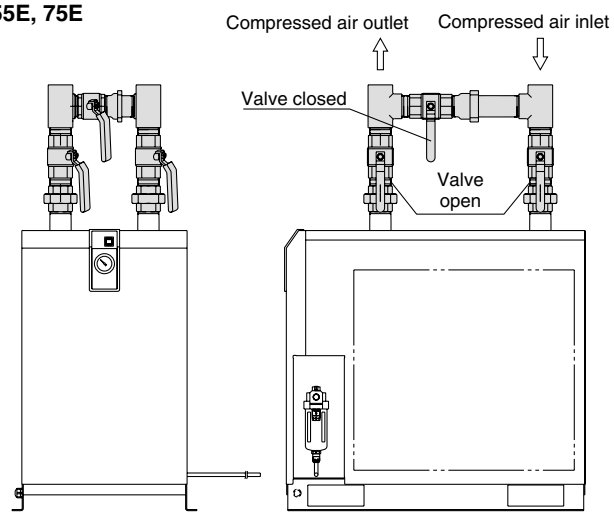

- When tightening the inlet/outlet air piping, firmly hold, the hexagonal parts of the port on the air dryer side or piping with a spanner or adjustable angle wrench.
- Variations in operating conditions may cause condensation to form at the surface of the outlet piping. Apply thermal insulation around the piping to prevent condensation from forming.
- Vibration resulting from the compressor should not be transmitted through air piping to the air dryer.
- Do not allow the weight of the piping to lie directly on the air dryer.

Specific Product Precautions 3

Be sure to read before handling. Refer to front matters 42 and 43 for Safety Instructions and pages 6 to 8 for Air Preparation Equipment Precautions.

Protection Circuit

⚠ Caution

When the air dryer is operated under the following stated conditions, a protection circuit is activated, the light turns off and operation stops.
- When the compressed air temperature is too high.
- When the compressed air flow rate is too high.
- When the ambient temperature is too high. (40°C or higher)
- When the fluctuation of the power supply is beyond the rated voltage ±10%.
- When the air dryer is drawing in high temperature air that is exhausted from an air compressor or other dryer.
- The ventilation port is obstructed by a wall or clogged with dust.

Compressor Air Delivery

⚠ Caution

Use an air compressor with an air delivery of 100 ℓ/min or larger for the IDF2E, 3E and the IDU3E, 4E.

Since the auto drain of the IDF2E to 75E, IDU3E to 75E is designed in such a way that the valve remains open unless the air pressure rises to 0.1 MPa or higher, air will blow out from the drain discharge port at the time of air compressor start up until the pressure increases. Therefore, if an air compressor has a small air delivery, the pressure may not be sufficient.

Auto Drain

⚠ Caution

The auto drain may not function properly, depending on the quality of the compressed air. Check the operation once a day.

Cleaning of Ventilation Area

⚠ Caution

Remove dust from the ventilation area once a month using a vacuum cleaner or an air blow nozzle.

Time Delay for Restarting

⚠ Caution

Allow at least three minutes before restarting the dryer. If the air dryer is restarted within three minutes after being stopped, the protection circuit will be activated, operating light turns off and the dryer will not be activated.

Modifying the Standard Specifications

⚠ Caution

Do not modify the standard product using any of the optional specifications once the product has been supplied to a customer. Check the specifications carefully before selecting an air dryer.

Refrigerated Air Dryer

Series IDFA□E

For use in Europe , Asia and Oceania

CE

EC Directive compliant (with CE marking)

Power supply voltage:
Single-phase 230 VAC (50 Hz)

Refrigerant ***R134a(HFC)***
R407C(HFC)

Coefficient of destruction for ozone is zero.

Improved corrosion resistance with the use of stainless steel, plate type heat exchanger (IDFA4E to 75E)

Series	Air flow capacity (m^3/h [ANR]) Outlet air pressure dew point 3°C	7°C	10°C	Refrigerant	Rated inlet condition	Port size
IDFA3E	12	15	17	R134a (HFC)	35°C 0.7 MPa	Rc 3/8
IDFA4E	24	31	34			Rc 1/2
IDFA6E	36	46	50			Rc 3/4
IDFA8E	65	83	91			
IDFA11E	80	101	112			
IDFA15E	120	152	168			Rc 1
IDFA22E	182	231	254	R407C (HFC)		R 1
IDFA37E	273	347	382			R 1 1/2
IDFA55E	390	432	510			R 2
IDFA75E	660	720	822			

1. Standard Products

Series IDFA

Standard inlet air type
Rated inlet air temperature: 35°C

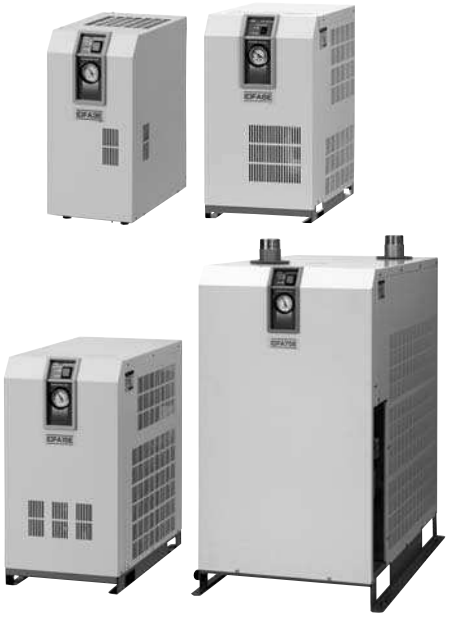

Model	Rated inlet condition	Air flow capacity (m^3/h [ANR]) Outlet air pressure dew point 3°C	7°C	10°C	Refrigerant	Port size	Page
IDFA3E	35°C 0.7 MPa	12	15	17	R134a (HFC)	Rc 3/8	**P. 62 to 64**
IDFA4E		24	31	34		Rc 1/2	
IDFA6E		36	46	50		Rc 3/4	
IDFA8E		65	83	91			
IDFA11E		80	101	112			
IDFA15E		120	152	168		Rc 1	
IDFA22E		182	231	254	R407C (HFC)	R 1	**P. 65 to 67**
IDFA37E		273	347	382		R 1 1/2	
IDFA55E		390	432	510		R 2	
IDFA75E		660	720	822			

2. Options

Specifications	Applicable model	Suffix (Option symbol)	Page
Cool compressed air output	**IDFA3E to 11E**	**IDFA□E-23-A**	**P. 68**
Anti-corrosive treatment	**IDFA3E to 75E**	**IDFA□E-23-C**	
For medium air pressure (Up to 1.6 MPa) (Auto drain bowl type: Metal bowl with level gauge)	**IDFA6E to 37E**	**IDFA□E-23-K**	
With heavy duty auto drain (For medium air pressure)	**IDFA4E to 75E**	**IDFA□E-23-L**	
With circuit breaker	**IDFA4E to 75E**	**IDFA□E-23-R**	**P. 69**
With terminal block for power supply, run & alarm signal and remote operation	**IDFA4E to 75E**	**IDFA□E-23-T**	
Timer type solenoid valve with auto drain (Applicable to medium air pressure)	**IDFA4E to 75E**	**IDFA□E-23-V**	

3. Optional Accessories

Description	Page
Dust-protecting filter set	**P. 70**
Foundation bolt set	

Model Selection

The corrected air flow capacity, which considers the user's operating conditions, is required for selecting the air dryer. Please select using the following procedures.

IDFA E Selection Example

Condition		Data symbol	Correction factor Note)
Inlet air temperature	40°C	A	0.83
Ambient temperature	35°C	B	0.83
Inlet air pressure	0.5 MPa	C	0.92
Air consumption	31 m³/h	—	—

Note) Values obtained from the table below.

1 Read the correction factor.

Obtain the correction factor A to D suitable for your operating condition using the table below.

2 Calculate the corrected air flow capacity.

Obtain the corrected air flow capacity from the following formula.
Corrected air flow capacity = Air consumption ÷ (Correction factor A x B x C)

Corrected air flow capacity = 31 m³/h ÷ (0.83 x 0.83 x 0.92) = 48.9 m³/h

3 Select the model.

Select the model which air flow capacity exceeds the corrected air flow capacity using the specification table. (For air flow capacity, refer to the data D below.)

According to the corrected air flow capacity of 48.9 m³/h, the IDFA8E will be selected when the required output air pressure dew point is 3°C. The IDFA6E will be selected when the required pressure dew point is 10°C.

4 Option

Refer to pages 68 and 69.

5 Finalize the model number.

Refer to pages 62 and 65

6 Select accessories sold separately.

Refer to page 70.

Data A: Inlet Air Temperature

Inlet air temperature (°C)	Correction factor	
	IDFA3E to 37E	**IDFA55E to 75E**
5 to 25	1.30	1.33
30	1.25	1.16
35	1	1
40	0.83	0.8
45	0.7	0.64
50	0.6	0.48

Data B: Ambient Temperature

Ambient temperature (°C)	Correction factor	
	IDFA3E to 11E	**IDFA15E to 75E**
20	1.1	1.1
25	1	1
30	0.91	0.97
35	0.83	0.89
40	0.79	0.77

Data C: Inlet Air Pressure

Inlet air pressure (MPa)	Correction factor	
	IDFA3E to 11E	**IDFA15E to 75E**
0.3	0.80	0.72
0.4	0.87	0.81
0.5	0.92	0.88
0.6	0.96	0.95
0.7	1.00	1.00
0.8	1.04	1.06
0.9	1.07	1.11
1	1.1	1.16
1.2	1.16	1.21
1.4	1.21	1.25
1.6	1.25	1.27

Data D: Air Flow Capacity

Model		Air flow capacity (m³/h [ANR])				
		IDFA3E	**IDFA4E**	**IDFA6E**	**IDFA8E**	**IDFA11E**
Outlet air pressure dew point	3°C	12	24	36	65	80
	7°C	15	31	46	83	101
	10°C	17	34	50	91	112

Note) In case of "Option A (Cool compressed air output)", the air flow capacity is different. Refer to page 68 for details.

Model		Air flow capacity (m³/h [ANR])				
		IDFA15E	**IDFA22E**	**IDFA37E**	**IDFA55E**	**IDFA75E**
Outlet air pressure dew point	3°C	120	182	273	390	660
	7°C	152	231	347	432	720
	10°C	168	254	382	510	822

Refrigerant R134a (HFC)

Series IDFA□E

3E, 4E, 6E, 8E, 11E, 15E
(Inlet air temperature: 35°C)

How to Order

IDFA 8 E — 23 — (Note 1) **Nil / A / C / K / L / R / T / V**

Size

Size
3
4
6
8
11
15

Voltage

Symbol	Voltage
23	Single-phase 230 VAC (50 Hz)

Options and Available Combinations (Size/Option)

Symbol Note 2) / Option / Size	Nil	A	C	K	L	R	T	V
	None	Cool compressed air output	Anti-corrosive treatment	For medium air pressure (Auto drain bowl type: Metal bowl with level gauge)	With heavy duty auto drain (Applicable to medium air pressure)	With circuit breaker	With terminal block for run & alarm signal	Timer type solenoid valve with auto drain (Applicable to medium air pressure)
3	●	●	●	—	—	—	—	—
4	●	●	●	—	●	●	●	●
6	●	●	●	●	●	●	●	●
8	●	●	●	●	●	●	●	●
11	●	●	●	●	●	●	●	●
15	●	—	●	●	●	●	●	●

Note 1) G thread (PF thread) can accept the R thread (PT male thread), thus making no "F" in the thread specification setting.
A conversion adaptor for the R thread (PT male thread) is also contained.

Note 2) Enter alphabetically when multiple options are combined.
However, the following combination cannot be achieved.
- Combination of K, L and V cannot be achieved because an auto drain can only be attached to a single option.

Note 3) Refer to pages 68 and 69 for further details on optional specifications.

Standard Specifications

Specifications \ Model				Standard temperature air inlet					
				IDFA3E	IDFA4E	IDFA6E	IDFA8E	IDFA11E	IDFA15E
Operating range	Fluid			Compressed air					
	Inlet air temperature (°C)			5 to 50					
	Inlet air pressure (MPa)			0.15 to 1.0					
	Ambient temperature (Humidity) (°C)			2 to 40 (Relative humidity of 85% or less)					
Rated specifications Note 3)	Air flow capacity m³/h	Note 1) Standard condition (ANR)	Outlet air pressure dew point (3°C)	12	24	36	65	80	120
			Outlet air pressure dew point (7°C)	15	31	46	83	101	152
			Outlet air pressure dew point (10°C)	17	34	50	91	112	168
		Note 2) Compressor intake condition	Outlet air pressure dew point (3°C)	13	25	37	68	83	125
			Outlet air pressure dew point (7°C)	16	32	48	86	105	158
			Outlet air pressure dew point (10°C)	18	35	52	95	116	175
	Inlet air pressure (MPa)			0.7					
	Inlet air temperature (°C)			35					
	Ambient temperature (°C)			25					
Electric	Power supply voltage			Single-phase: 230 VAC [Voltage fluctuation ±10%] 50 Hz					
	Power consumption (W)			180			208	385	470
	Operating current (A)			1.2			1.4	2.7	3.0
Applicable circuit breaker capacity Note 4) (A)				5					10
Condenser				Air-cooled					
Refrigerant				R134a (HFC)					
Auto drain				Float type (Normally closed)		Float type (Normally open)			
Port size				Rc 3/8	Rc 1/2	Rc 3/4			Rc 1
Accessory				Hexagon nipple					
Mass (kg)				18	22	23	27	28	46
Coating color				Body panel: White 1 Base: Gray 2					
Compliant standards				EC Directive (with CE marking)					

Note 1) Air flow capacity under the standard condition (ANR) [atmospheric pressure at 20°C, relative humidity at 65%]
Note 2) Air flow capacity converted by the compressor intake condition [atmospheric pressure at 32°C]
Note 3) Select air dryer according to the model selection method (page 61) for the models beyond the rated specifications.
Note 4) Install a circuit breaker with a sensitivity of 30 mA.
Note 5) When a short-term interruption of the power supply (including momentary interruption) occurs in this equipment, the restarting of normal operations may require some time or may be impossible due to the operation of protective devices even after the supply of power returns.

JIS Symbol

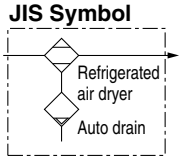

Replacement Parts

Model	IDFA3E	IDFA4E	IDFA6E	IDFA8E	IDFA11E	IDFA15E
Auto drain replacement part no. Note 5)	AD38		AD48			

Note 6) The part number for the auto drain components without including the body part. Body part replacement is impossible.

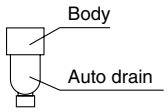

Construction Principle (Air/Refrigerant Circuit)

Humid, hot air coming into the air dryer will be cooled down by a cooler re-heater (heat exchanger). Water condensed at this time will be removed from the air by auto drain and drained out automatically. Air separated from the water will be heated by a cooler re-heater (heat exchanger) to obtain the dried air, which goes through to the outlet side.

IDFA3E

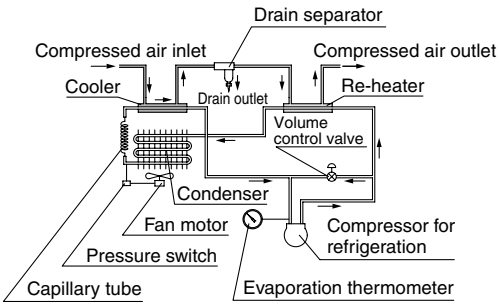

IDFA4E, IDFA6E IDFA8E, IDFA11E, IDFA15E

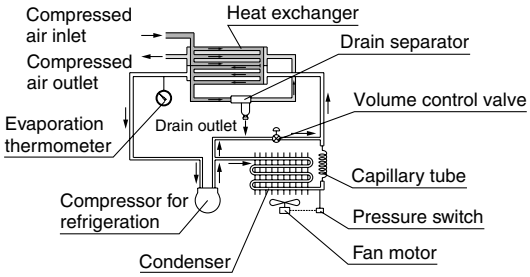

Dimensions

IDFA3E to 15E

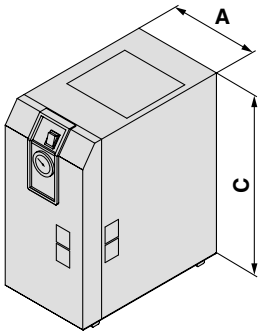

In case of IDFA3E

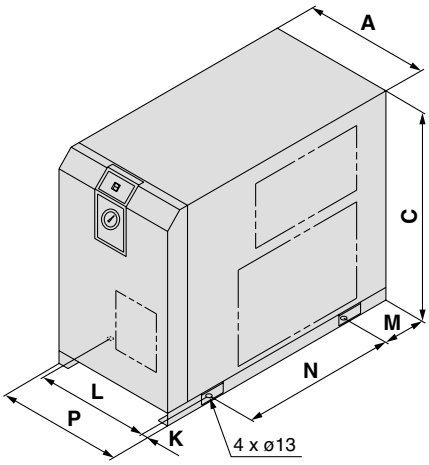

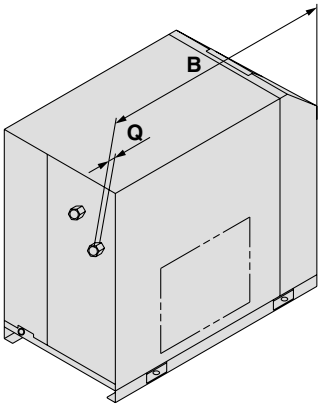

IDFA4E to 15E

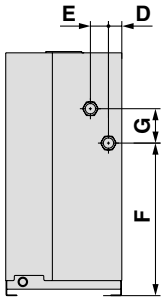

Dimensions (mm)

Model	Port size	A	B	C	D	E	F	G	K*	L*	M*	N*	P	Q
IDFA3E	Rc 3/8	226	410	473	67	125	304	33	36	154	21	330		15
IDFA4E	Rc 1/2		453	498			283					275		13
IDFA6E		270	455		31	42		80		240	80		—	
IDFA8E	Rc 3/4		485	568			355		15			300		15
IDFA11E														
IDFA15E	Rc 1	300	603	578	41	54	396	87		43	101	380	314	16

* Meaning the foot dimensions for the IDFA3E.

Refrigerant R407C (HFC)

Series IDFA□E

22E, 37E, 55E, 75E
(Inlet air temperature: 35°C)

How to Order

IDFA 55 E — 23 —

Note 1)

Nil
A
C
K
L
R
T
V

Size

Size
22
37
55
75

Voltage

Symbol	Voltage
23	Single-phase 230 VAC (50 Hz)

Options and Available Combinations (Size/Option)

Symbol Note 2) / Option / Size	Nil	A	C	K	L	R	T	V
	None	Cool compressed air output	Anti-corrosive treatment	For medium air pressure (Auto drain bowl type: Metal bowl with level gauge)	With heavy duty auto drain (Applicable to medium air pressure)	With circuit breaker	With terminal block for run & alarm signal	Timer type solenoid valve with auto drain (Applicable to medium air pressure)
22	●	—	●	●	●	●	●	●
37	●	—	●	●	●	●	●	●
55	●	—	●	—	●	●	●	●
75	●	—	●	—	●	●	●	●

Note 1) G thread (PF thread) can accept the R thread (PT male thread), thus making no "F" in the thread specification setting.
Note 2) Enter alphabetically when multiple options are combined.
However, the following combination cannot be achieved.
• Combination of K, L and V cannot be achieved because an auto drain can only be attached to a single option.
Note 3) Refer to pages 68 and 69 for further details on optional specifications.

Standard Specifications

Specifications \ Model				Standard temperature air inlet			
				IDFA22E	IDFA37E	IDFA55E	IDFA75E
Operating range	Fluid			Compressed air			
	Inlet air temperature (°C)			5 to 50			
	Inlet air pressure (MPa)			0.15 to 1.0			
	Ambient temperature (Humidity) (°C)			2 to 40 (Relative humidity of 85% or less)			
Rated specifications Note 3)	Air flow capacity m³/h	Note 1) Standard condition (ANR)	Outlet air pressure dew point (3°C)	182	273	390	660
			Outlet air pressure dew point (7°C)	231	347	432	720
			Outlet air pressure dew point (10°C)	254	382	510	822
		Note 2) Compressor intake condition	Outlet air pressure dew point (3°C)	189	284	405	686
			Outlet air pressure dew point (7°C)	240	361	449	748
			Outlet air pressure dew point (10°C)	264	397	530	854
	Inlet air pressure (MPa)			0.7			
	Inlet air temperature (°C)			35			
	Ambient temperature (°C)			25			
Electric	Power supply voltage			Single-phase: 230 VAC [Voltage fluctuation ±10%] 50 Hz			
	Power consumption (W)			760		1130	1700
	Operating current (A)			4.3		5.4	7.9
Applicable circuit breaker capacity Note 4) (A)				10			20
Condenser				Air-cooled			
Refrigerant				R407C (HFC)			
Auto drain				Float type (Normally open)			
Port size				R 1	R 1 1/2	R 2	
Accessory				—			
Mass (kg)				54	62	100	116
Coating color				Body panel: White 1 Base: Gray 2			
Compliant standards				EC Directive (with CE marking)			

Note 1) Air flow capacity under the standard condition (ANR) [atmospheric pressure at 20°C, relative humidity at 65%]
Note 2) Air flow capacity converted by the compressor intake condition [atmospheric pressure at 32°C]
Note 3) Select air dryer according to the model selection method (page 61) for the models beyond the rated specifications.
Note 4) Install a circuit breaker with a sensitivity of 30 mA.
Note 5) When a short-term interruption of the power supply (including momentary interruption) occurs in this equipment, the restarting of normal operations may require some time or may be impossible due to the operation of protective devices even after the supply of power returns.

Replacement Parts

Model	IDFA22E	IDFA37E	IDFA55E	IDFA75E
Auto drain replacement part no. Note 5)	AD48			

Note 6) The part number for the auto drain components without including the body part. Body part replacement is impossible.

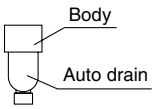

JIS Symbol

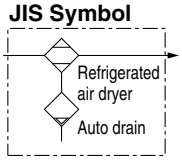

Construction Principle (Air/Refrigerant Circuit)

Humid, hot air coming into the air dryer will be cooled down by a cooler re-heater (heat exchanger). Water condensed at this time will be removed from the air by auto drain and drained out automatically. Air separated from the water will be heated by a cooler re-heater (heat exchanger) to obtain the dried air, which goes through to the outlet side.

IDFA22E, IDFA37E, IDFA55E, IDFA75E

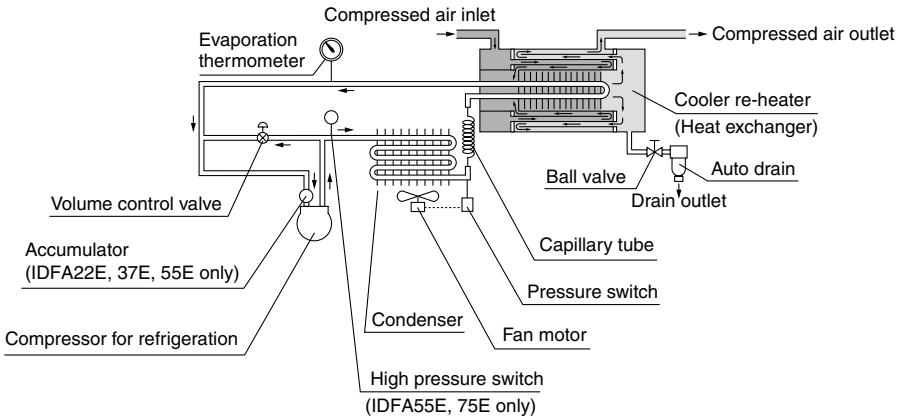

Dimensions

IDFA22E, IDFA37E

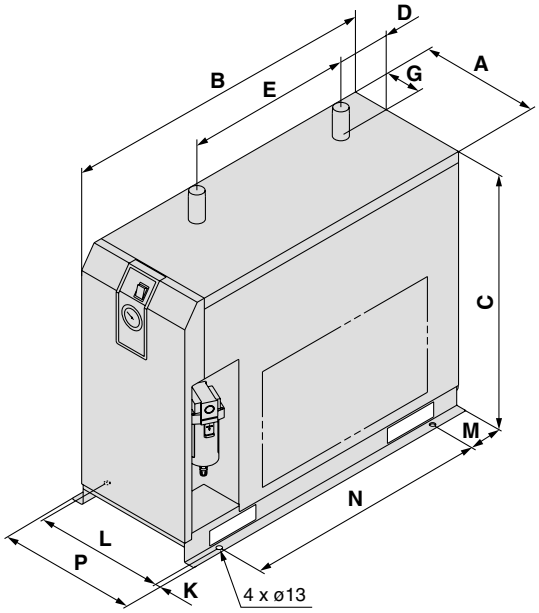

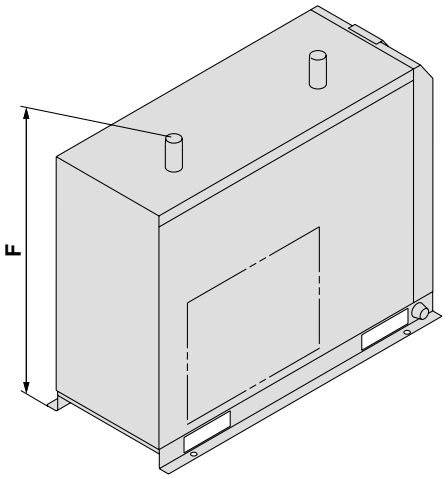

Dimensions (mm)

Model	Port size	A	B	C	D	E	F	G	K	L	M	N	P	Q
IDFA22E	R 1	290	775	623	134	405	698	93	13	25	85	600	340	—
IDFA37E	R 1 1/2		855									680		

IDFA55E, IDFA75E

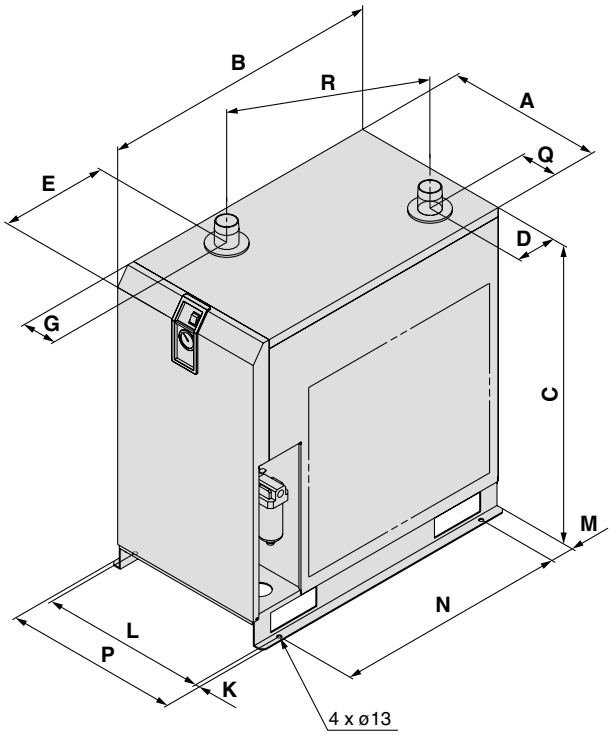

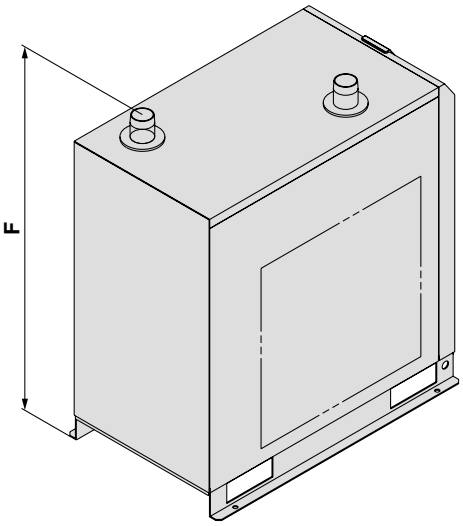

Dimensions (mm)

Model	Port size	A	B	C	D	E	F	G	K	L	M	N	P	Q	R
IDFA55E	R 2	470	855	800	(128)	(273)	(868)	(110)	13	500	75	700	526	(110)	519
IDFA75E				900			(968)								

Options 1

For "How to Order" optional models, refer to pages 62 and 65.

A Option symbol
Cool compressed air output — IDFA3E to 11E

There is no heating of cooled, dehumidified air as it leaves the air dryer. The air flow capacity with this option is smaller than that of the standard dryer. (The external dimensions are identical with the standard product.)
Note) Perform thermal insulation treatment for piping and equipment installed after the dryer to prevent the formation of condensation.

Air Flow Capacity

Model	IDFA3E	IDFA4E	IDFA6E	IDFA8E	IDFA11E
Air flow capacity m^3/h (ANR)	18	23	29	32	39

Conditions: Inlet air pressure: 0.7 MPa, Inlet air temperature: 35°C ,
Outlet air temperature: 10°C Ambient temperature: 25°C

C Option symbol
Anti-corrosive treatment — IDFA all models

This minimizes the corrosion of the copper and copper alloy parts when the air dryer is used in an atmosphere containing hydrogen sulfide or sulfurous acid gas. (Corrosion cannot be completely prevented.)
Special epoxy coating: Copper tube and copper alloy parts.
The coating is not applied on the heat exchanger or around electrical parts, where operation may be affected by the coating.
∗ Corrosion is not covered under warranty.

K Option symbol
For medium air pressure (Auto drain bowl type: Metal bowl with level gauge) — IDFA6E to 37E

The auto drain is changed from the standard one to one with a medium pressure specification.
A metal bowl with a level gauge which can confirm the water level is used for the auto drain.

Specifications
1. Maximum operating pressure: 1.6 MPa
2. Dimensions ··· same as standard products

Replacement Parts

Model	Auto drain assembly part no.	Note
IDFA6E to 15E	IDF-S0086	The AD48-8-X2110 auto drain, insulator, and one-touch fitting are included.
IDFA22E, 37E	AD48-8-X2110	Single auto drain unit

L Option symbol
With heavy duty auto drain (Applicable to medium air pressure) — IDFA4E to 75E

The float type auto drain used in the standard air dryer is replaced with a heavy duty auto drain (ADH4000-04) which enables the drainage to discharge more efficiently.

Dimensions (mm)

Model	A
IDFA4E	55
IDFA6E	67
IDFA8E, 11E	139
IDFA15E	47

IDFA4E to 15E

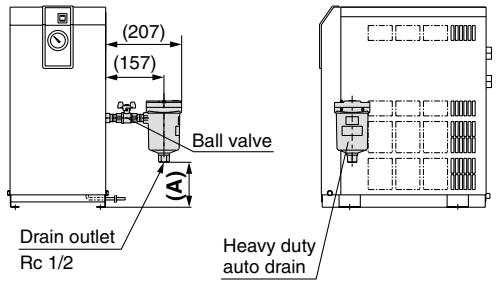

IDFA22E to 75E

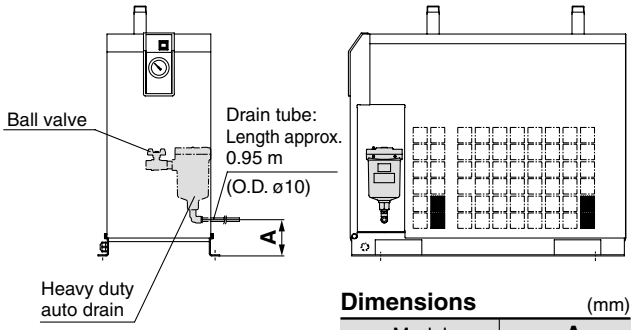

Dimensions (mm)

Model	A
IDFA22E, 37E	Approx. 100
IDFA55E, 75E	Approx. 120

Note 1) The heavy duty auto drain and the ball valve are both enclosed in the same shipping package as the main body of the air dryer. Customers are required to mount the parts to the air dryer. (Except IDFA22E to 75E)
Note 2) Customers will need to supply the fitting and tubing for the drain piping. (Except IDFA22E to 75E)

Replacement Parts: Heavy Duty Auto Drain

Model	Replacement part no. (Description)	Configuration
IDFA4E to 15E	ADH4000-04 (Heavy duty auto drain)	Heavy duty auto drain
IDFA22E to 75E	ADH-E400 (Replacement kit for exhaust mechanism)	Replacement kit for exhaust mechanism; Housing (You don't need to purchase a new housing.)

Options 2

For "How to Order" optional models, refer to pags 62 and 65.

R Option symbol

With circuit breaker — IDFA4E to 75E

A circuit breaker with cover is attached to the side of the air dryer. This saves additional electrical wiring at the time of installation.

IDFA4E to 15E

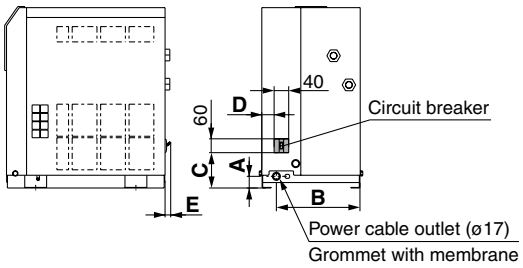

Dimensions (mm)

Model	A	B	C	D	E
IDFA4E, 6E, 8E, 11E	32	230	97	34	15
IDFA15E	43	258	102	82	—

IDFA22E to 75E

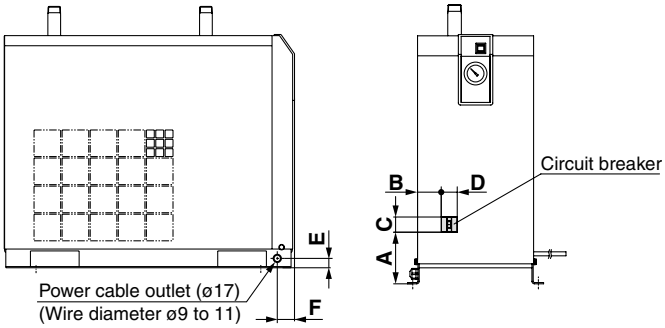

Dimensions (mm)

Model	A	B	C	D	E	F
IDFA22E	125	59	60	40	25	46
IDFA37E		39				
IDFA55E	148	81		60	50	36
IDFA75E	133	73				

Breaker Capacity and Sensitivity Current

Voltage	Model	Breaker capacity	Sensitivity current
230 V type	IDFA4E-23, IDFA6E-23 IDFA8E-23, IDFA11E-23	5 A	30 mA
	IDFA15E-23, IDFA22E-23 IDFA37E-23, IDFA55E-23	10 A	
	IDFA75E-23	20 A	

T Option symbol

With terminal block for power supply, run & alarm signal and remote operation — IDFA4E to 75E

In addition to the terminals for the power supply, terminals for the operating signal and the error signal are also available. (No-voltage contact)
Also, in the case of remote control, operate it from the power supply side while the air dryer switch remains ON.

Contact capacity: 230 VAC, 4 A 24 VDC, 5 A for operating and error signals.
Minimum current value: 20 V, 5 mA (AC/DC) for operating and error signals.

Note) Please be sure to confirm the electric circuits with the drawings or instruction manual before using the output signal.

IDFA4E to 15E

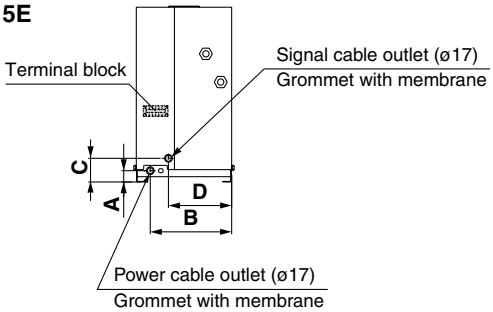

Dimensions (mm)

Model	A	B	C	D
IDFA4E, 6E, 8E, 11E	32	230	67	179
IDFA15E	43	258	77	158

IDFA22E to 75E

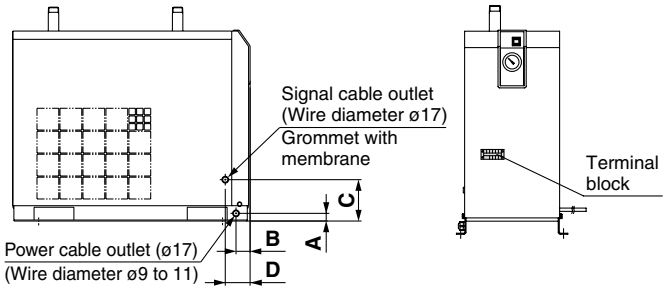

Dimensions (mm)

Model	A	B	C	D
IDFA22E, 37E	25	46	135	81
IDFA55E, 75E	50	36	207	81

V Option symbol

Timer type solenoid valve with auto drain (Applicable to medium air pressure) — IDFA4E to 75E

Drainage is discharged by controlling a solenoid valve with a timer.
A strainer for solenoid valve protection and stop valve are also included.
(Dimensions are the same as the standard type.)

Maximum operating pressure: 1.6 MPa

∗ The timer-type solenoid valve actuates once (for 0.5 s) every 30 s.

Replacement Parts

Model	Part no.	Note
IDFA4E to 37E	IDF-S0198	230 VAC
IDFA55E, 75E	IDF-S0302	230 VAC

Optional Accessories

	Features	Specifications	Applicable dryer
Dust-protecting filter set	Prevents a decline in the performance of the air dryer, even in a dusty atmosphere.	Max. ambient temperature 40°C	IDFA3E to 75E
Foundation bolt set	Bolts for fixing the air dryer to the foundations. Easy to secure by striking its axle.	Stainless steel	IDFA4E to 75E

How to Order

Dust-protecting filter set

IDF — FL 209

Applicable dryer

Symbol	Applicable dryer
209	IDFA3E
202	IDFA4E
203	IDFA6E
204	IDFA8E
205	IDFA11E
206	IDFA15E
207	IDFA22E
208	IDFA37E
213	IDFA55E
214	IDFA75E

Foundation bolt set

IDF — AB 500

Applicable dryer

Symbol	Applicable dryer
500	IDFA4E to 75E

Dust-protecting Filter Set / Dimensions

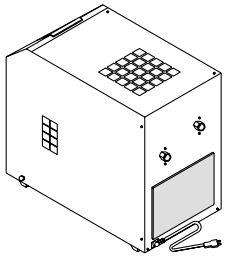

(IDF-FL209)

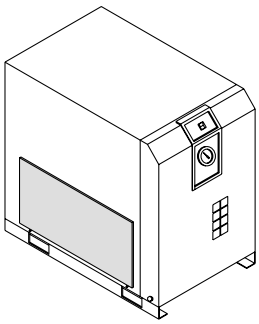

(IDF-FL202 to 208, 213, 214)

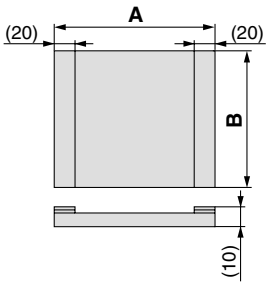

Dimensions (mm)

Part no.	Applicable dryer	A	B	Mass (g)
IDF-FL209	IDFA3E	220	240	35
IDF-FL202	IDFA4E	310	195	45
IDF-FL203	IDFA6E	375		55
IDF-FL204	IDFA8E	340	265	70
IDF-FL205	IDFA11E	375		75
IDF-FL206	IDFA15E	310	270	70
IDF-FL207	IDFA22E	420	315	100
IDF-FL208	IDFA37E	550	365	140
IDF-FL213	IDFA55E	720	400	175
IDF-FL214	IDFA75E	610	560	190

Foundation Bolt Set / Dimensions

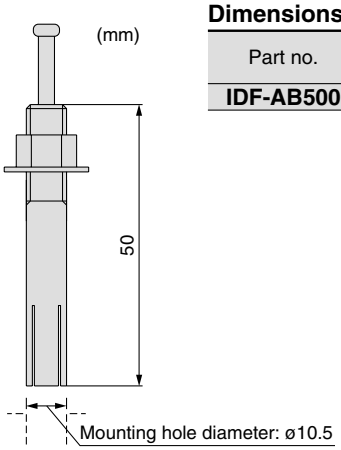

Dimensions (mm)

Part no.	Applicable dryer	Nominal thread size	Material	Pcs. of 1 set
IDF-AB500	IDFA4E to 75E	M10	Stainless steel	4

Specific Product Precautions 1

Be sure to read before handling.
Refer to front matters 42 and 43 for Safety Instructions and pages 6 to 8 for Air Preparation Equipment Precautions.

Installation

⚠ Caution

- Avoid locations where the air dryer will be in direct contact with wind and rain. (Places where relative humidity is greater than 85%)
- Avoid exposure to direct sunlight.
- Avoid locations that contain much dust, corrosive gases, or flammable gases. Failure due to corrosion is not covered under warranty. However, when the risk of corrosion is high, select "Option C" (copper tubing with anti-corrosive treatment).
- Avoid locations of poor ventilation and high temperature.
- Avoid too close to a wall etc. Leave sufficient room between the dryer and the wall according to the "Maintenance space" in the operation manual.
- Avoid locations where a dryer could draw in high temperature air that is discharged from an air compressor or other dryer.

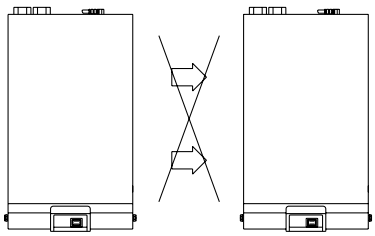

The air exhaust should not flow into the neighboring equipment. (Top side)

- Avoid locations subjected to vibration.
- Avoid possible locations where the drain can freeze.
- Use the air dryer with an ambient temperature lower than 40°C.
- Avoid installation on machines for transporting, such as trucks, ships, etc.

Drain Tube

⚠ Caution

- A polyurethane tube is attached as a drain tube for the IDFA3E to 75E. Use this tube to discharge drainage.
- Do not use the drain tube in an upward direction. Do not bend or crush the drain tube. (Operation of the auto drain will stop water vapor from discharging through the air outlet.)

Power Supply

⚠ Caution

- Connect the power supply to the terminal block.
- Install a suitable circuit breaker applicable for the specific model.
- The voltage fluctuation should be maintained within ±10% of the rated voltage.

Air Piping

⚠ Caution

- Be careful to avoid an error in connecting the air piping at the compressed air inlet (IN) and outlet (OUT).
- Install by-pass piping since it is needed for maintenance.

IDFA3E

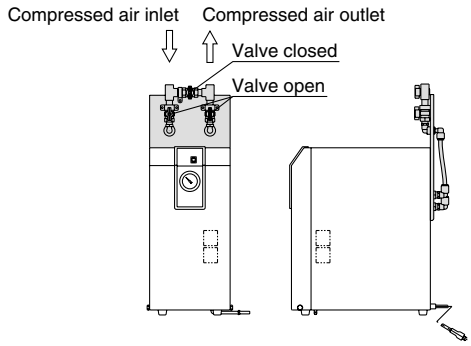

IDFA4E to 15E

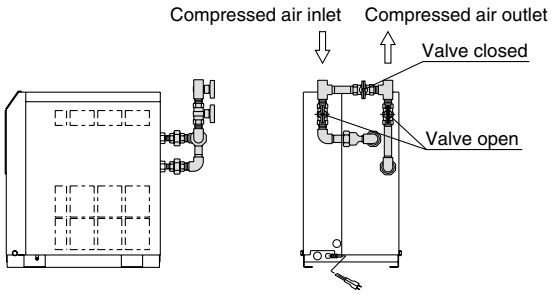

IDFA22E, 37E

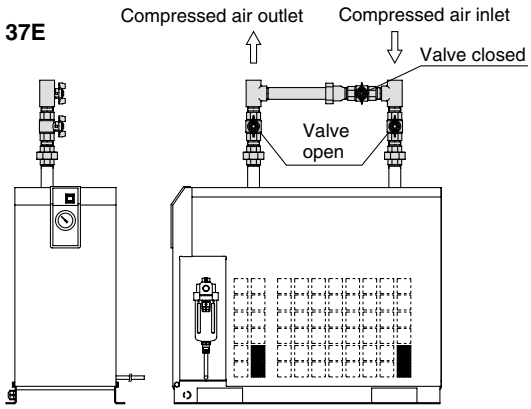

Specific Product Precautions 2

Be sure to read before handling.
Refer to front matters 42 and 43 for Safety Instructions and pages 6 to 8 for Air Preparation Equipment Precautions.

Air Piping

⚠ Caution

IDFA55E, 75E

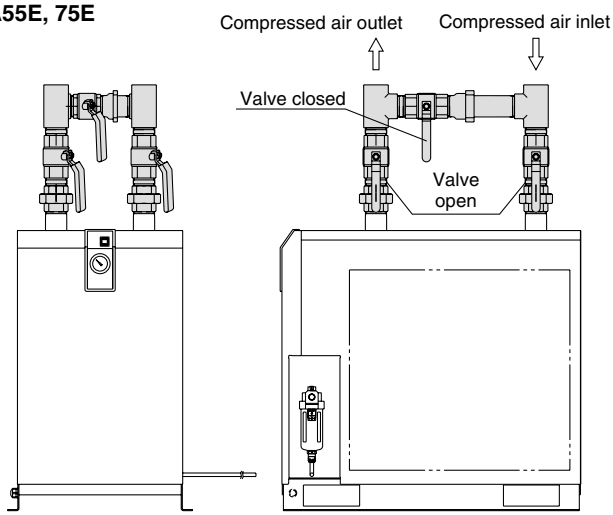

- When tightening piping at the air inlet/outlet tube, the hexagonal parts of the port on the air dryer side or piping should be held firmly with a spanner or adjustable angle wrench.
- Variations in operating conditions may cause condensation to form at the surface of the outlet piping. Apply thermal insulation around the piping to prevent condensation from forming.
- Vibration resulting from the compressor should not be transmitted through air piping to the air dryer.
- Do not allow the weight of the piping to lie directly on the air dryer.

Protection Circuit

⚠ Caution

When the air dryer is operated under the following stated conditions, a protection circuit is activated, the light turns off and operation stops.
- When the compressed air temperature is too high.
- When the compressed air flow rate is too high.
- When the ambient temperature is too high. (40°C or higher)
- When the fluctuation of the power supply is beyond the rated voltage ±10%.
- When the dryer is drawing in high temperature air that is discharged from an air compressor or other dryer.
- The ventilation port is obstructed by a wall or clogged with dust.

Compressor Air Delivery

⚠ Caution

Use an air compressor with an air delivery of 100 ℓ/min or larger with the IDFA3E to 75E series.

Since the auto drain of the IDFA3E to 75E is designed in such a way that the valve remains open unless the air pressure rises to 0.15 MPa or higher, air will blow out from the drain discharge port at the time of air compressor start-up until the pressure increases. Therefore, if an air compressor has a small air delivery, the pressure may not be sufficient.

Auto Drain

⚠ Caution

The auto drain may not function properly, depending on the quality of the compressed air. Check the operation once a day.

Cleaning of Ventilation Area

⚠ Caution

Remove dust from the ventilation area once a month using a vacuum cleaner or an air blow nozzle.

Time Delay for Restarting

⚠ Caution

Allow at least three minutes before restarting the dryer. If the air dryer is restarted within three minutes after being stopped, the protection circuit will be activated, operating light turns off and the dryer will not be activated.

Refrigerated Air Dryer

For use in North, Central & South America

c UL us LISTED

Protect Pneumatic Equipment from Moisture!

An air dryer removes the vapor from the moist compressed air delivered by the compressor, and prevents it from causing the pneumatic equipment to fail.

● Effects of moisture on equipment

Malfunctioning of valves and actuators caused by dripping grease

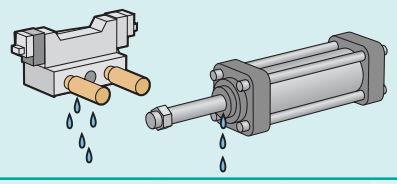

Decomposition of auto drain caused by rusting inside pipes

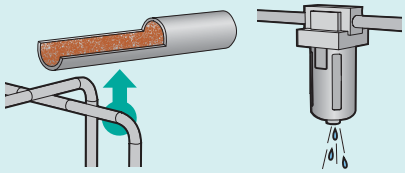

Generation of water droplets

Refrigerant ***R134a(HFC), R407C(HFC)***

Coefficient of destruction for ozone is zero.

Improved corrosion resistance with the use of stainless steel, plate type heat exchanger (IDFB4E to 75E)

UL certified product

Power supply voltage:
Single-phase 115 VAC (60 Hz)
230 VAC (60 Hz)
Three-phase 460 VAC (60 Hz)

New
IDFB55E/75E
are added

Series IDFB□E

SMC

CAT.ES30-10B

The Importance of Dryers

Compressed air contains moisture (water vapor, droplets), oil, debris and other foreign matter. Filters and mist separators can be used to remove droplets, oil, debris, and so on, but a dryer is necessary to remove water vapor.

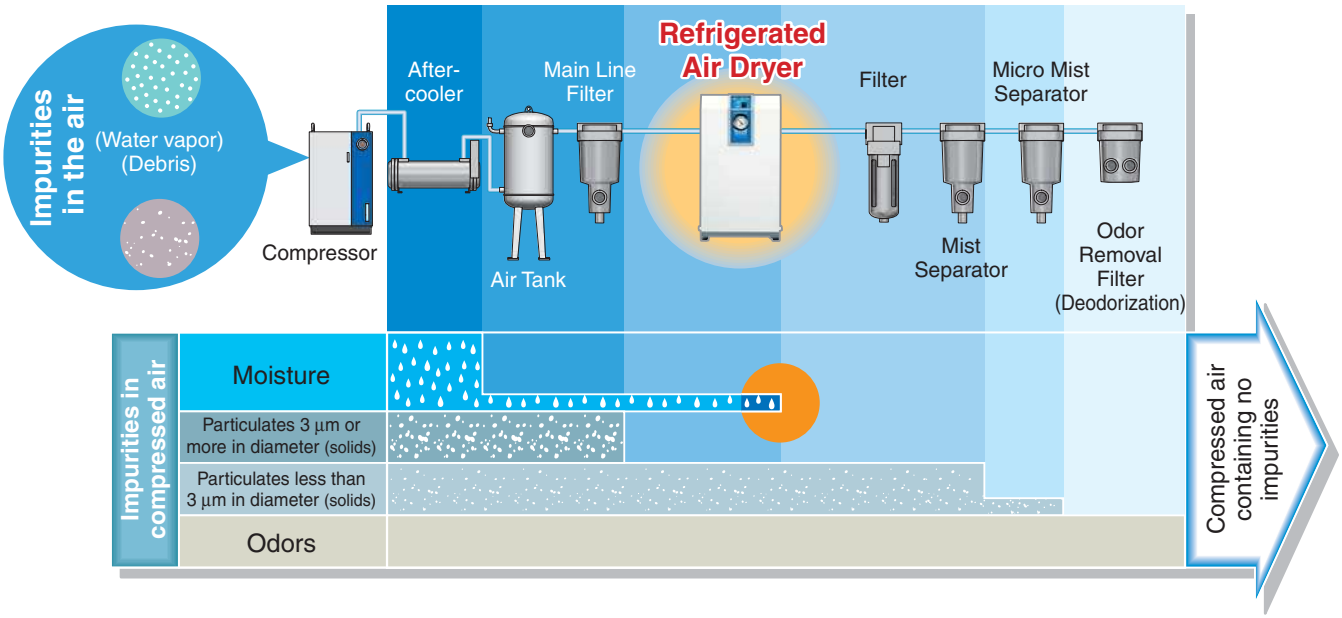

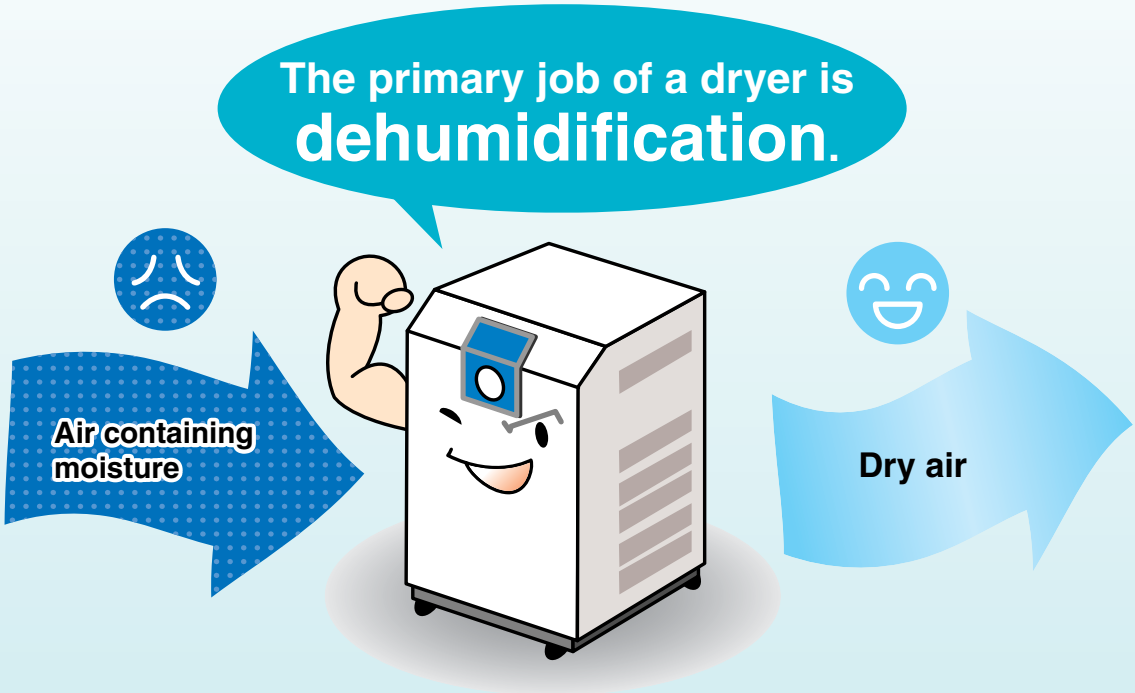

SMC Air Preparation Equipment

Quick Reference Guide to Air Preparation Equipment

* Shows standard combinations. The suffix numbers of the model indicate port size, power supply, etc. Refer to “How to Order” on pages 3 and 7 for details on dryers and refer to “SMC Best Pneumatics” Vol.14 catalog for other equipment.
* The symbol “—” in the table indicates that no such equipment exists.
* The figures for air flow capacity corresponding to air compressor output are provided for reference only.
* The table below applies to the air pressure dew point (at 100 psi (0.7 MPa)) 50°F (10°C). In cases where other dew points are needed, please refer to page 2 (Model Selection) of this catalog.

For reciprocating compressors

Air compressor			Main line			Sub line		Local line				
Output (kW)	Air flow capacity SCFM (ANR)	Air flow capacity m³/h (ANR)	Air tank	Aftercooler Note 1) Air-cooled	Aftercooler Note 1) Water-cooled	Main line filter	Note 2) Refrigerated air dryer 60 Hz area	Mist separator	Micro mist separator with pre-filter	Micro mist separator	Super mist separator	Odor removal filter
2.2	10.6	18	AT6C-04	HAA7-06	HAW7-06	AFF2C-02	IDFB3E	AM150C-02	AMH250C-03	AMD250C-03	AME250C-03	AMF250C-03
3.7	17.7	30	AT6C-04	HAA7-06	HAW7-06	AFF4C-03	IDFB4E	AM250C-03	AMH250C-03	AMD250C-03	AME250C-03	AMF250C-03
5.5	24.7	42	AT6C-04	HAA7-06	HAW7-06	AFF4C-04	IDFB6E	AM250C-03	AMH350C-04	AMD350C-04	AME350C-04	AMF350C-04
7.5	35.3	60	AT11C-06	HAA15-10	HAW22-14	AFF8C-04	IDFB8E	AM350C-04	AMH350C-04	AMD350C-04	AME350C-04	AMF350C-04
11	53.0	90	AT11C-06	HAA15-10	HAW22-14	AFF8C-06	IDFB11E	AM350C-06	AMH450C-06	AMD450C-06	AME450C-06	AMF450C-06
15	70.6	120	AT22C-14	HAA22-14	HAW22-14	AFF11C-06	IDFB15E	AM450C-06	AMH450C-06	AMD450C-06	AME450C-06	AMF450C-06
22	105.9	180	AT22C-14	HAA37-14	HAW37-14	AFF22C-10	IDFB22E	AM550C-10	AMH550C-06	AMD550C-10	AME550C-10	AMF550C-10
27	123.6	210	AT37C-14	HAA37-14	HAW37-14	AFF22C-10	IDFB22E	AM550C-10	AMH550C-10	AMD550C-10	AME550C-10	AMF550C-10
37	176.5	300	AT37C-14	—	HAW55-20	AFF37B-14	IDFB37E	AM650-14	AMH650-14	AMD650-14	AME650-14	AMF650-14
55	264.7	450	AT55C-20	—	HAW75-20	AFF75$^{A}_{B}$-20	IDFB55E	AM850-20	AMH850-20	AMD850-20	AME850-20	AMF850-20
75	353.0	600	AT75C-20	—	HAW110-30	AFF75$^{A}_{B}$-20	IDFB75E	AM850-20	AMH850-20	AMD850-20	AME850-20	AMF850-20

For screw compressors (when an aftercooler is installed)

Air compressor			Main line		Sub line	Local line				
Output (kW)	Air flow capacity SCFM (ANR)	Air flow capacity m³/h (ANR)	Aftercooler Note 1) Air-cooled	Aftercooler Note 1) Water-cooled	Note 2) Refrigerated air dryer 60 Hz area	Mist separator	Micro mist separator with pre-filter	Micro mist separator	Super mist separator	Odor removal filter
2.2	10.6	18	HAA7-06	HAW2-04	IDFB3E	AM150C-02	AMH250C-03	AMD250C-03	AME250C-03	AMF250C-03
3.7	17.7	30	HAA7-06	HAW7-06	IDFB4E	AM250C-03	AMH250C-03	AMD250C-03	AME250C-03	AMF250C-03
5.5	26.5	45	HAA7-06	HAW7-06	IDFB6E	AM250C-03	AMH350C-04	AMD350C-04	AME350C-04	AMF350C-04
7.5	35.3	60	HAA7-06	HAW7-06	IDFB8E	AM350C-04	AMH350C-04	AMD350C-04	AME350C-04	AMF350C-04
11	53.0	90	HAA15-10	HAW22-14	IDFB11E	AM350C-04	AMH450C-06	AMD450C-06	AME450C-06	AMF450C-06
15	77.7	132	HAA15-10	HAW22-14	IDFB15E	AM450C-06	AMH550C-10	AMD550C-10	AME550C-10	AMF550C-10
22	116.5	198	HAA22-14	HAW22-14	IDFB22E	AM550C-10	AMH550C-10	AMD550C-10	AME550C-10	AMF550C-10
37	204.7	348	HAA37-14	HAW37-14	IDFB37E	AM650-14	AMH650-14	AMD650-14	AME650-14	AMF650-14
55	300.0	510	—	HAW55-20	IDFB55E	AM850-20	AMH850-20	AMD850-20	AME850-20	AMF850-20
75	423.5	720	—	HAW75-20	IDFB75E	AM850-20	AMH850-20	AMD850-20	AME850-20	AMF850-20

Note 1) Air-cooled aftercooler
- Inlet air temperature ..... 158.8°F (60°C)
- Ambient temperature ..... 84.7°F (32°C)

Water-cooled aftercooler
- Inlet air temperature ..... 476.2°F (180°C)
- Cooling water inlet temperature .... 79.4°F (30°C)

Note 2) Series IDFB
- Inlet air temperature ..... 100°F (37.8°C) Saturation
- Ambient temperature ..... 84.7°F (32°C)

INDEX

1. Standard Products

Series IDFB

Standard inlet air type

Rated inlet air temperature: 100°F (37.8°C)

Model	Air flow capacity SCFM (m³/h [ANR]) Outlet air pressure dew point Note)			Refrigerant	Rated inlet condition	Port size	Page
	37°F (2.8°C)	45°F (7.2°C)	50°F (10°C)				
IDFB3E	10 (17)	11 (19)	12 (20)	R134a (HFC)	100°F (37.8°C) 100 psi (0.7 MPa)	NPT 3/8	**P. 3 to 9**
IDFB4E	15 (25)	16 (27)	17 (28)			NPT 1/2	
IDFB6E	25 (43)	26 (45)	28 (47)			NPT 3/4	
IDFB8E	41 (70)	43 (74)	45 (77)				
IDFB11E	59 (100)	62 (106)	65 (110)				
IDFB15E	71 (120)	80 (136)	86 (147)			NPT 1	
IDFB22E	107 (182)	120 (205)	130 (221)				
IDFB37E	161 (273)	173 (294)	181 (308)			NPT 1 1/2	
IDFB55E	226 (384)	258 (438)	297 (504)	R407C (HFC)		NPT 2	
IDFB75E	300 (510)	353 (600)	406 (690)				

Note) Air flow capacity for each dew point is indicated.

2. Options

Optional specifications	Applicable model	Model (Suffix: Option symbol)	Page
Cool compressed air output	**IDFB3E to 11E**	**IDFB□E-11-A**	**P. 10, 11**
For medium air pressure (up to 240 psi (1.6 MPa)) (Auto drain bowl: Metal bowl with level gauge)	**IDFB6E to 37E**	**IDFB□E-□-K**	
With heavy duty auto drain (Suitable for medium air pressure)	**IDFB55E, 75E**	**IDFB□E-46-L**	
With circuit breaker	**IDFB4E to 75E**	**IDFB□E-□-R**	
With terminal block for power supply, run & alarm signal and remote operation	**IDFB4E to 75E**	**IDFB□E-□-T**	
Timer type solenoid valve with auto drain (Suitable for medium air pressure)	**IDFB4E to 75E**	**IDFB□E-□-V**	

3. Accessory (Option)

Description	Page
Dust-protecting filter set	**P. 12**

4. Safety Instructions ··· Back page 1, 2

Series IDFB□E
Model Selection

The corrected air flow capacity, which considers the user's operating conditions, is required for selecting the air dryer. Please select using the following procedures.

IDFB□E Selection Example

1 Read the correction factor.

Obtain the correction factor A to D suitable for your operating condition using the table below.

Condition		Data symbol	Correction factor Note)
Inlet air temperature	110°F (43°C)	A	0.82
Ambient temperature	105°F (40.5°C)	B	0.98
Inlet air pressure	75 psi (0.53 MPa)	C	0.95
Air consumption	14 SCFM	—	—

Note) Values obtained from the table below.

2 Calculate the corrected air flow capacity.

Obtain the corrected air flow capacity from the following formula.
Corrected air flow capacity = Air consumption ÷ (Correction factor A x B x C)

Corrected air flow capacity = 14 SCFM ÷ (0.82 x 0.98 x 0.95)
= 18 SCFM

3 Select the model.

Select the model which air flow capacity exceeds the corrected air flow capacity using the specification table. (For air flow capacity, refer to the data D below.)

According to the corrected air flow capacity of 18 SCFM, the IDFB6E will be selected because its air flow capacity at 60 Hz is 25 SCFM.

4 Option

Refer to page 3, 7.

5 Finalize the model number.

Refer to page 3, 7.

6 Select accessories sold separately.

Refer to page 12.

Data A: Inlet Air Temperature

Inlet air temperature		Correction factor	
°F	°C	IDFB3E to 37E	IDFB55E, 75E
90	**32**	1.31	1.08
100	**37.8**	1.00	1.00
110	**43**	0.82	0.83
120	**49**	0.66	0.46

Data B: Ambient Temperature

Ambient temperature		Correction factor
°F	°C	
77	**25**	1.24
90	**32**	1.09
95	**35**	1.04
100	**37.8**	1.00
105	**40.5**	0.98
110	**43**	0.95

Data C: Inlet Air Pressure

Inlet air pressure		Correction factor
psi	MPa	
75	**0.53**	0.95
100	**0.70**	1.00
110	**0.76**	1.04
120	**0.83**	1.07
125	**0.86**	1.09
150	**1.03**	1.13
175	**1.21**	1.18
200	**1.38**	1.22
250	**1.72**	1.24

Data D: Air Flow Capacity

Model		Air flow capacity SCFM (m^3/h (ANR))									
		IDFB3E	**IDFB4E**	**IDFB6E**	**IDFB8E**	**IDFB11E**	**IDFB15E**	**IDFB22E**	**IDFB37E**	**IDFB55E**	**IDFB75E**
Outlet air pressure dew point	37°F (2.8°C)	10 (17)	15 (25)	25 (43)	41 (70)	59 (100)	71 (120)	107 (182)	161 (273)	226 (384)	300 (510)
	45°F (7.2°C)	11 (19)	16 (27)	26 (45)	43 (74)	62 (106)	80 (136)	120 (205)	173 (294)	258 (438)	353 (600)
	50°F (10°C)	12 (20)	17 (28)	28 (47)	45 (77)	65 (110)	86 (147)	130 (221)	181 (308)	297 (504)	406 (690)

Note) In case of "Option A (Cool compressed air output)", the air flow capacity is different. Refer to page 10 for details.

Refrigerant R134a (HFC)
Standard Inlet Air
Series IDFB□E
3E, 4E, 6E, 8E, 11E, 15E
(Inlet air temperature: 100°F [37.8°C])

How to Order

IDFB 11 E – 11 N –

Size

Size
3
4
6
8
11
15

Voltage

Symbol	Voltage
11	Single-phase 115 VAC (60 Hz)

Thread type

Symbol	Thread type	Drain tube size
N	NPT (female)	3/8
Nil	Rc (female) Note)	ø0.4 in [ø10 mm]

Note) An adapter for converting NPT to Rc is included if the thread symbol is "Nil".

Nil
A
K
R
T
V

Table of Options and Available Combinations (Size/Option)

Symbol Note 1) / Optional specifications / Size	Nil	A	K	R	T	V
	None	Cool compressed air output	For medium air pressure (Auto drain bowl: Metal case with level gauge)	With circuit breaker	With terminal block for run & alarm signal	Timer type solenoid valve with auto drain (Suitable for medium air pressure)
3	●	●	—	—	—	—
4	●	●	—	●	●	●
6	●	●	●	●	●	●
8	●	●	●	●	●	●
11	●	●	●	●	●	●
15	●	—	●	●	●	●

Note 1) Enter alphabetically when multiple options are combined.
However, the following combination cannot be achieved.
• Combination of K and V (Only one or the other may be attached.)
Note 2) Refer to pages 10 and 11 for further information on options.

Standard Specifications

Specifications \ Model		Standard inlet air					
		IDFB3E	IDFB4E	IDFB6E	IDFB8E	IDFB11E	IDFB15E
Operating ranges	Fluid	Compressed air					
	Inlet air temperature °F (°C)	41 to 122 (5 to 50)					
	Inlet air pressure psi (MPa)	22 (0.15) to 150 (1.0)					
	Ambient temperature °F (°C)	36 to 104 (2 to 40) Relative humidity of 85% or less					
Air flow capacity SCFM Note 1, 2) (m³/h (ANR))	Outlet air pressure dew point 37°F (2.8°C)	10 (17)	15 (25)	25 (43)	41 (70)	59 (100)	71 (120)
	Outlet air pressure dew point 45°F (7.2°C)	11 (19)	16 (27)	26 (45)	43 (74)	62 (106)	80 (136)
	Outlet air pressure dew point 50°F (10°C)	12 (20)	17 (28)	28 (47)	45 (77)	65 (110)	86 (147)
Rated conditions	Operating pressure psi (MPa)	100 (0.7)					
	Inlet air temperature °F (°C)	100 (37.8)					
	Ambient temperature °F (°C)	100 (37.8)					
Electric specifications	Power supply voltage	Single-phase 115 VAC [voltage fluctuation ±10%] 60 Hz					
	Operating current (A)	2.7	3.0	3.0	3.5	6.5	7.5
	Power consumption (W)	240	260	260	310	550	750
	Applicable circuit breaker capacity Note 3) (A)	15					
Condenser		Forced air-cooled					
Refrigerant		R134a (HFC)					
Thread symbol and size	Symbol N	NPT 3/8 (female)	NPT 1/2 (female)	NPT 3/4 (female)			NPT 1 (female)
	Symbol Nil	Rc 3/8 (female) With Rc conversion adapter	Rc 1/2 (female) With Rc conversion adapter	Rc 3/4 (female) With Rc conversion adapter			Rc 1 (female) With Rc conversion adapter
Drain tube O.D.	Symbol N	3/8 inch					
	Symbol Nil	10 mm					
Coating color		White 1					
Mass lbs (kg)		40 (18)	55 (25)	57 (26)	64 (29)	73 (33)	110 (50)
Compliant standards		UL, CSA					

Note 1) ANR is under the conditions of 68°F (20°C) at atmospheric pressure and relative humidity of 65%.
Note 2) Air flow capacity for each outlet air pressure dew point is indicated.
Note 3) Install a circuit breaker with a sensitivity of 30 mA.
Note 4) If this equipment suffers a short-term power outage (even if it is only momentary), it may require some time before normal operation resumes, and protective mechanisms may prevent normal operation even after the power supply has been restored.

Replacement Parts

Model		IDFB3E	IDFB4E	IDFB6E	IDFB8E	IDFB11E	IDFB15E
Auto drain replacement part no. Note 5)	Thread symbol N	AD38N-Z		AD48N-Z			
	Thread symbol Nil	AD38		AD48			

Note 5) The part number for the auto drain components without including the body part. Body part replacement is impossible.

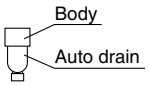

Construction Principle (Circuit for Air/Refrigerant)

Humid, hot air coming into the air dryer will be cooled down by a cooler (heat exchanger). Water condensed at this time will be removed from the air by a drain separator (auto drain) and drained out automatically. Air separated from the water will be heated by a re-heater (heat exchanger) to obtain the dried air, which goes through to the outlet side.

IDFB3E

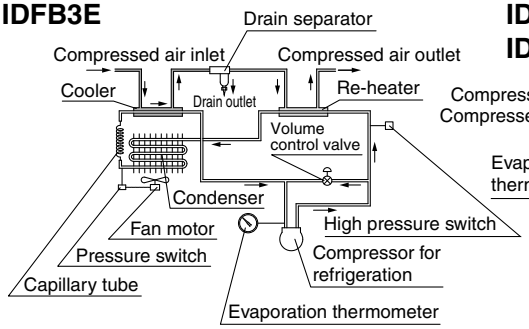

IDFB4E, IDFB6E, IDFB8E, IDFB11E, IDFB15E

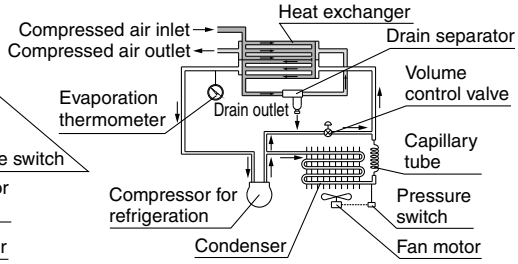

JIS Symbol

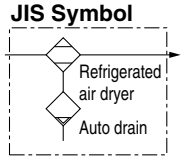

Dimensions

IDFB3E

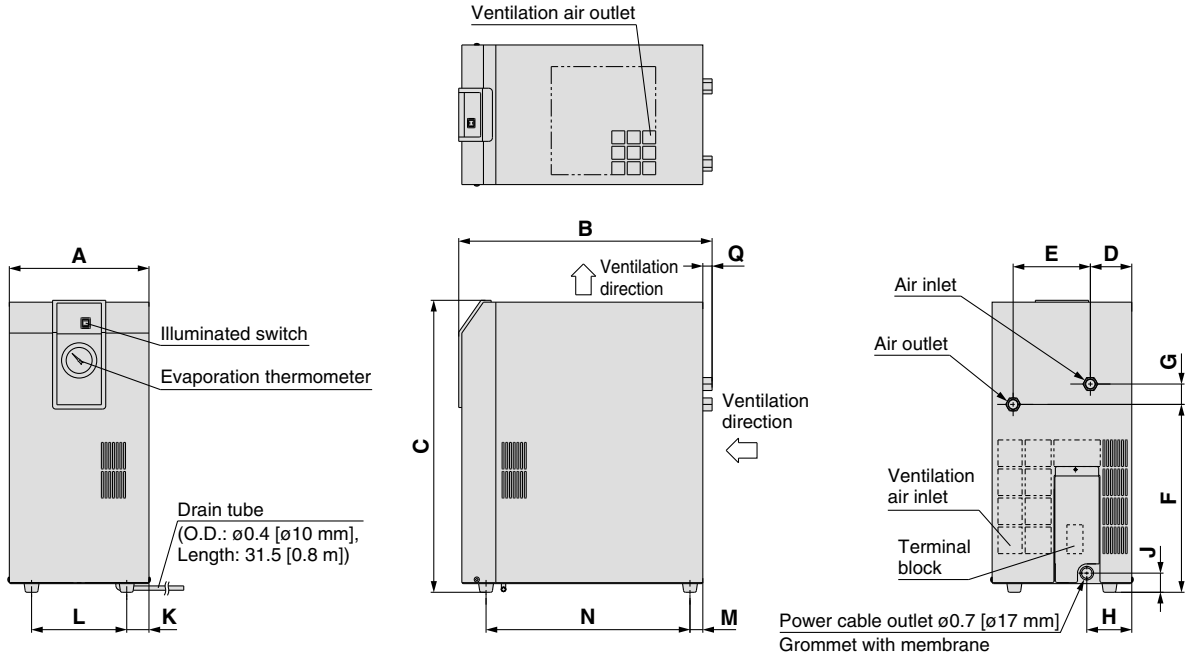

Dimensions Unit: inch [mm]

Model	Port size	A	B	C	D	E	F	G	H	J	K	L	M	N	Q
IDFB3E	3/8	8.9 [226]	16.1 [410]	18.6 [473]	2.6 [67]	4.9 [125]	12.0 [304]	1.3 [33]	2.9 [73]	1.2 [31]	1.4 [36]	6.1 [154]	0.8 [21]	13.0 [330]	0.6 [15]

IDFB4E to IDFB11E

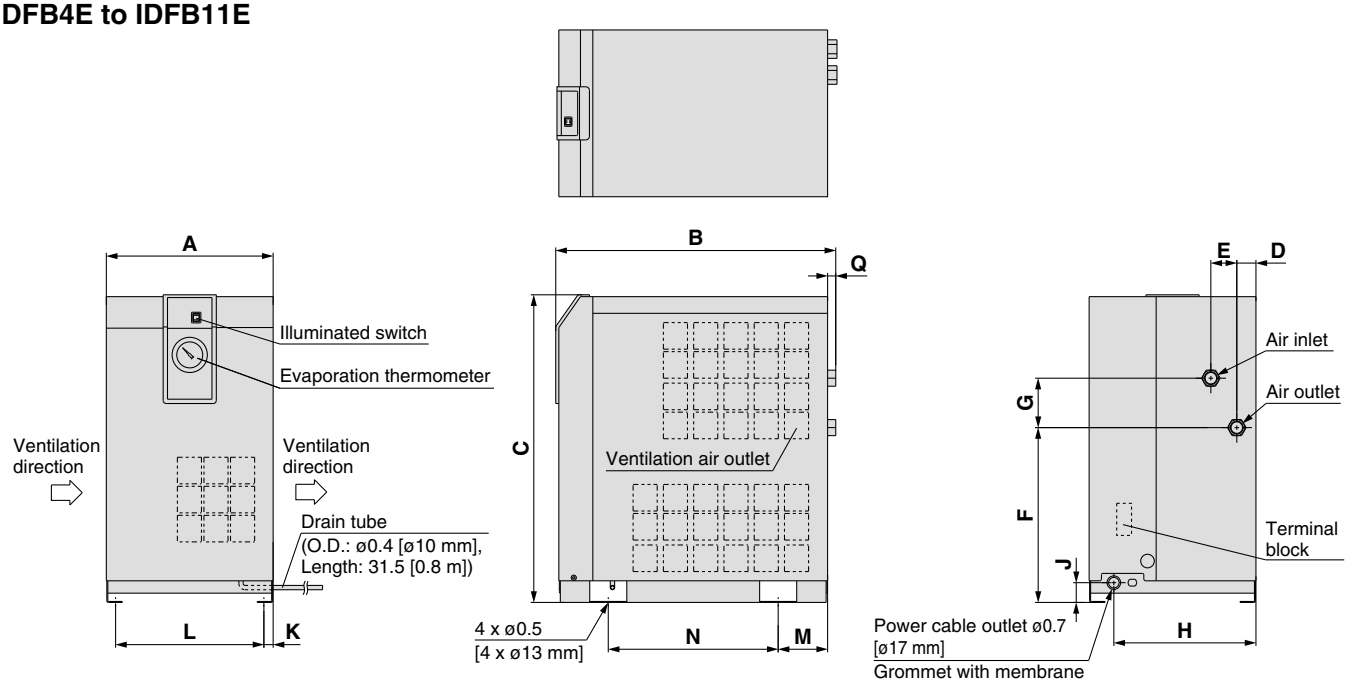

Dimensions Unit: inch [mm]

Model	Port size	A	B	C	D	E	F	G	H	J	K	L	M	N	Q
IDFB4E	1/2	10.6 [270]	17.8 [453]	19.6 [498]	1.2 [31]	1.7 [42]	11.1 [283]	3.1 [80]	9.1 [230]	1.3 [32]	0.6 [15]	9.4 [240]	3.1 [80]	10.8 [275]	0.5 [13]
IDFB6E	3/4		17.9 [455]												
IDFB8E			19.1 [485]	22.4 [568]			14 [355]							11.8 [300]	
IDFB11E															

Dimensions

IDFB15E

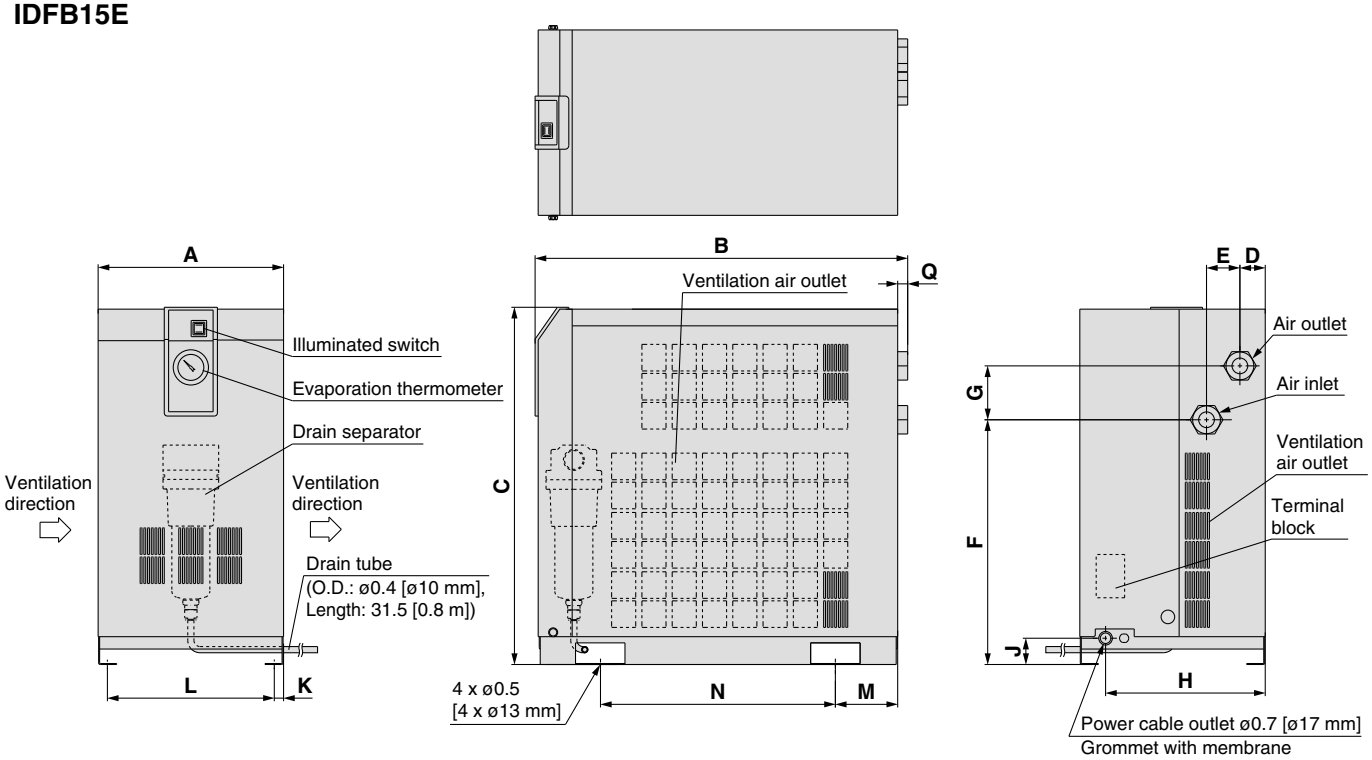

Dimensions Unit: inch [mm]

Model	Port size	A	B	C	D	E	F	G	H	J	K	L	M	N	Q
IDFB15E	1	11.8 [300]	23.7 [603]	22.8 [578]	1.6 [41]	2.1 [54]	16.6 [396]	3.4 [87]	10.2 [258]	1.7 [43]	0.6 [15]	10.6 [270]	4.0 [101]	15.0 [380]	0.6 [16]

Refrigerant R134a (HFC), R407C (HFC)
Standard Inlet Air
Series IDFB□E
22E, 37E, 55E, 75E
(Inlet air temperature: 100°F [37.8°C])

How to Order

IDFB 22 E — 11 N —

Size

Size
22
37
55
75

Nil
K
L
R
T
V

Voltage

Symbol	Voltage	Applicable size			
		22	37	55	75
11	Single-phase 115 VAC (60 Hz)	●	—	—	—
23	Single-phase 230 VAC (60 Hz)	●	●	—	—
46	Three-phase 460 VAC (60 Hz)	—	—	●	●

Thread type

Symbol	Thread type	Drain tube size
N	NPT (male)	3/8
Nil	R (male)	ø0.4 in [ø10 mm]

Table of Options and Available Combinations (Size/Option)

Symbol Note 1) / Optional specifications / Size	Nil	K	L	R	T	V
	None	For medium air pressure (Auto drain bowl: Metal case with level gauge)	With heavy duty auto drain (Suitable for medium air pressure)	With circuit breaker	With terminal block for run & alarm signal	Timer type solenoid valve with auto drain (Suitable for medium air pressure)
22	●	●	—	●	●	●
37	●	●	—	●	●	●
55	●	—	●	●	●	●
75	●	—	●	●	●	●

Note 1) Enter alphabetically when multiple options are combined.
However, the following combination cannot be achieved.
• Combination of K, L and V (All of them are auto drain and only one or the other may be attached.)
Note 2) Refer to pages 10 and 11 for further information on options.

Standard Specifications

Specifications \ Model			Standard inlet air			
			IDFB22E	IDFB37E	IDFB55E	IDFB75E
Operating ranges	Fluid		Compressed air			
	Inlet air temperature	°F (°C)	41 to 122 (5 to 50)			
	Inlet air pressure	psi (MPa)	22 (0.15) to 150 (1.0)			
	Ambient temperature	°F (°C)	36 to 104 (2 to 40) Relative humidity of 85% or less			
Air flow capacity SCFM Note 1, 2) (m³/h (ANR))	Outlet air pressure dew point	37°F (2.8°C)	107 (182)	161 (273)	226 (384)	300 (510)
	Outlet air pressure dew point	45°F (7.2°C)	120 (205)	173 (294)	258 (438)	353 (600)
	Outlet air pressure dew point	50°F (10°C)	130 (221)	181 (308)	297 (504)	406 (690)
Rated conditions	Operating pressure	psi (MPa)	100 (0.7)			
	Inlet air temperature	°F (°C)	100 (37.8)			
	Ambient temperature	°F (°C)	100 (37.8)			
Electric specifications	Power supply voltage		Single-phase 115 VAC [voltage fluctuation ±10%] 60 Hz	Single-phase 230 VAC [voltage fluctuation ±10%] 60 Hz		Three-phase 460 VAC [voltage fluctuation ±10%] 60 Hz
	Operating current	(A)	9	4.5	5.6	3.8
	Power consumption	(W)	1000		1270	2400
	Applicable circuit breaker capacity Note 3)	(A)	15			10
Condenser			Forced air-cooled			
Refrigerant			R134a (HFC)			R407C (HFC)
Thread symbol and size	Symbol N		NPT 1 (male)		NPT 1 1/2 (male)	NPT 2 (male)
	Symbol Nil		R 1 (male)		R 1 1/2 (male)	R 2 (male)
Drain tube O.D.	Symbol N		3/8 inch			
	Symbol Nil		10 mm			
Coating color			White 1			
Mass		lbs (kg)	119 (54)	137 (62)	258 (117)	271 (123)
Compliant standards			UL, CSA			

Note 1) ANR is under the conditions of 68°F (20°C) at atmospheric pressure and relative humidity of 65%.
Note 2) Air flow capacity for each outlet air pressure dew point is indicated.
Note 3) Install a circuit breaker with a sensitivity of 30 mA.
Note 4) If this equipment suffers a short-term power outage (even if it is only momentary), it may require some time before normal operation resumes, and protective mechanisms may prevent normal operation even after the power supply has been restored.

Replacement Parts

Model		IDFB22E	IDFB37E	IDFB55E	IDFB75E
Auto drain replacement part no. Note 5)	Thread symbol N	AD48N-Z			
	Thread symbol Nil	AD48			

Note 5) The part number for the auto drain components without including the body part. Body part replacement is impossible.

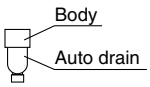

JIS Symbol

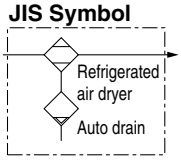

Construction Principle (Circuit for Air/Refrigerant)

Humid, hot air coming into the air dryer will be cooled down by a cooler re-heater (heat exchanger). Water condensed at this time will be removed from the air by a drain separator (auto drain) and drained out automatically. Air separated from the water will be heated by a cooler re-heater (heat exchanger) to obtain the dried air, which goes through to the outlet side.

IDFB22E, IDFB37E

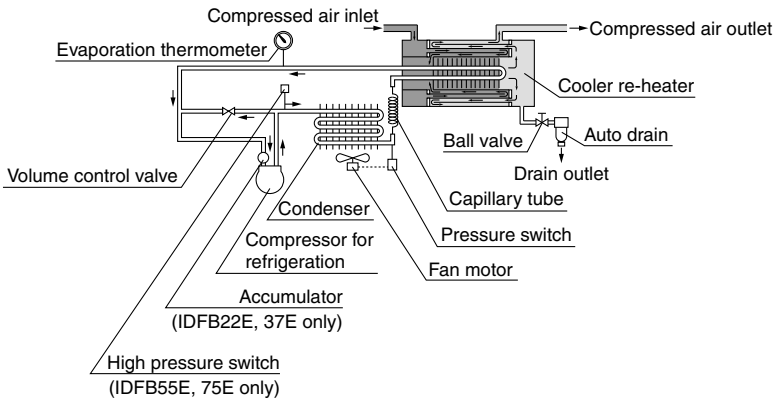

Dimensions

IDFB22E, IDFB37E

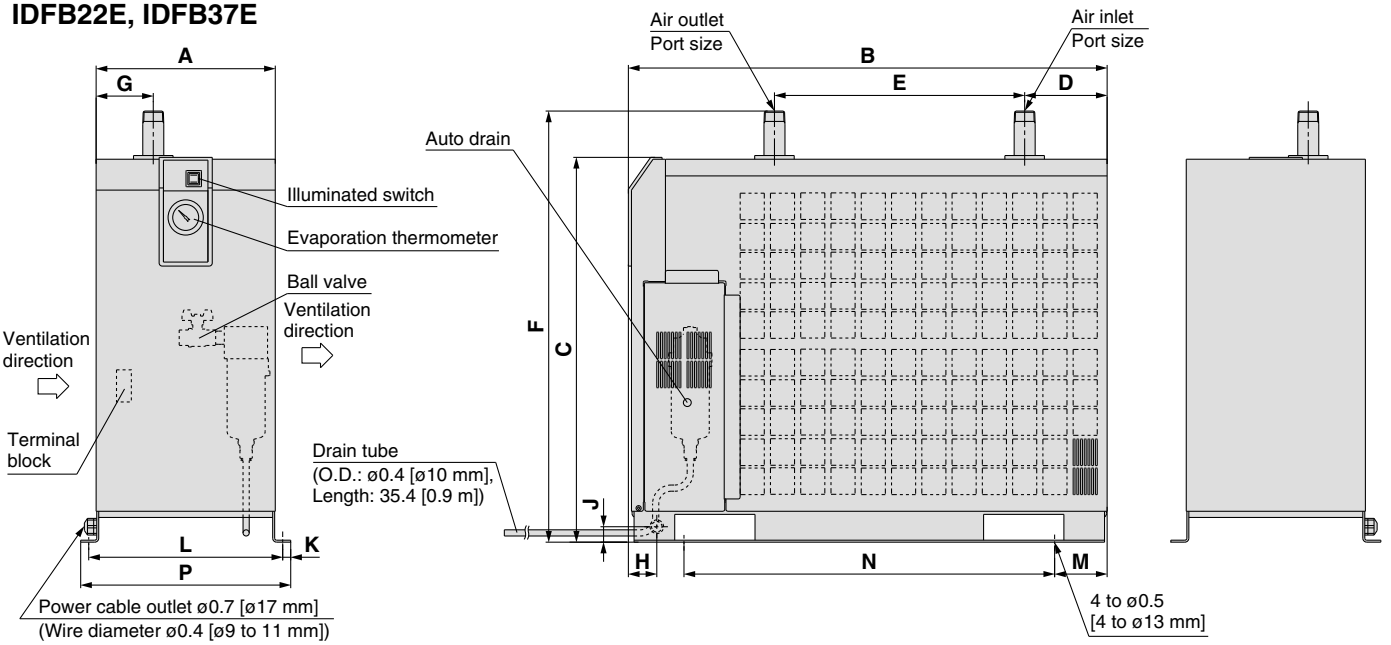

Dimensions Unit: inch [mm]

Model	Port size	A	B	C	D	E	F	G	H	J	K	L	M	N	P
IDFB22E	1	11.4 [290]	30.5 [775]	24.5 [623]	5.3 [134]	15.9 [405]	27.5 [698]	3.7 [93]	1.8 [46]	1.0 [25]	0.5 [13]	12.4 [314]	3.3 [85]	23.6 [600]	13.4 [340]
IDFB37E	$1^1/_2$		33.7 [855]											26.8 [680]	

IDFB55E, IDFB75E

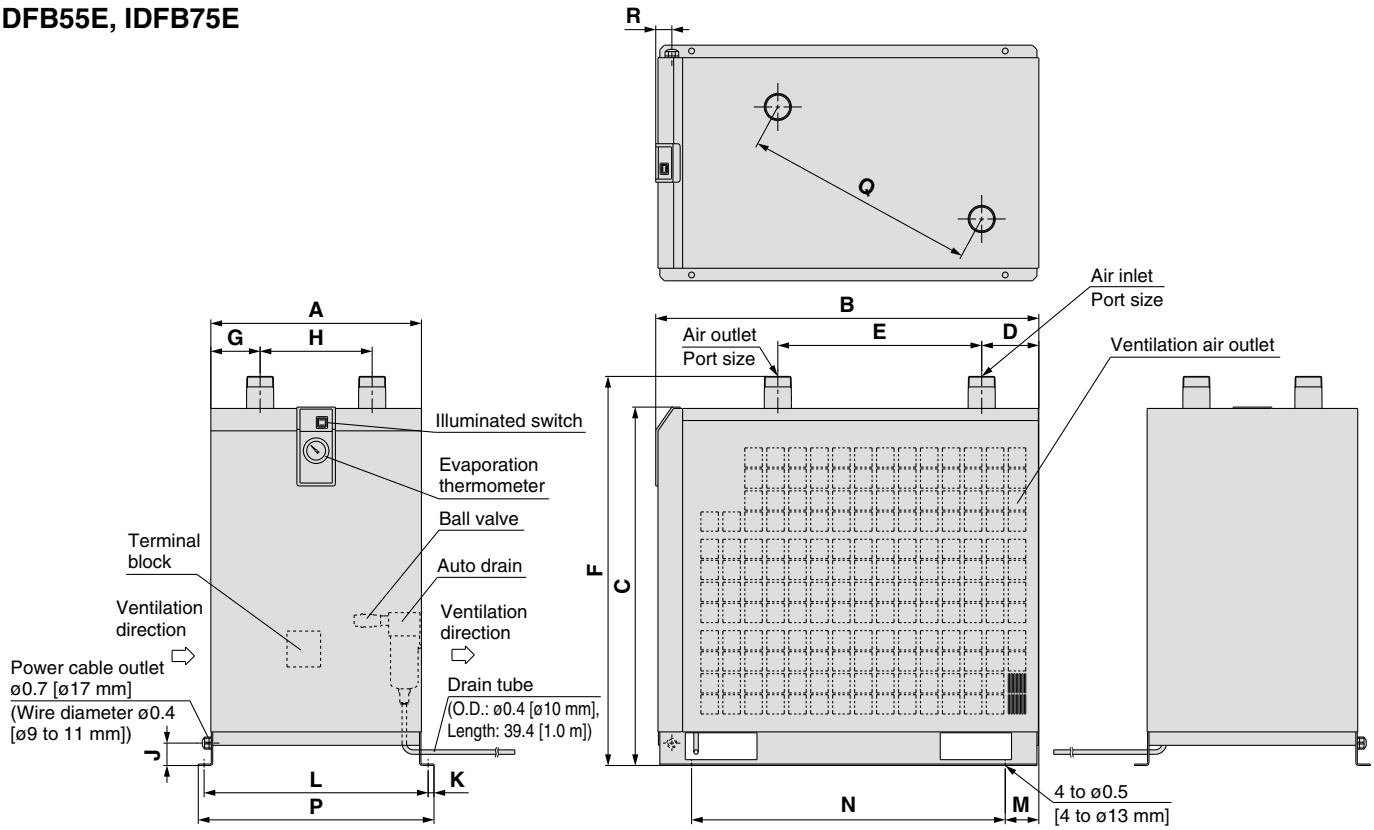

Dimensions Unit: inch [mm]

Model	Port size	A	B	C	D	E	F	G	H	J	K	L	M	N	P	Q	R
IDFB55E	2	18.5 [470]	33.7 [855]	31.5 [800]	5.0 [128]	17.9 [455]	34.2 [868]	4.3 [110]	9.8 [250]	2 [50]	0.5 [13]	19.7 [500]	3.0 [75]	27.6 [700]	20.7 [526]	20.4 [519]	1.4 [36]
IDFB75E	2			35.4 [900]			38.1 [968]										

Optional Specifications 1

Refer to "How to Order" pages 3 and 7 for optional models.

A Option symbol
Cool compressed air output — IDFB3E to 11E

There is no heating of cooled, dehumidified air as it leaves the air dryer. The air flow capacity with this option is smaller than that of the standard dryer. (The external dimensions are identical with the standard product.)
Note) Perform thermal insulation treatment for pipings and equipment installed after the dryer to prevent the formation of condensation.

Air Flow Capacity

Model	IDFB3E	IDFB4E	IDFB6E	IDFB8E	IDFB11E
Air flow capacity (ANR)	5 SCFM (8 m³/h)	13 SCFM (23 m³/h)	17 SCFM (29 m³/h)	19 SCFM (32 m³/h)	23 SCFM (39 m³/h)

Conditions: Inlet air pressure: 100 psi (0.7 MPa), Inlet air temperature: 100°F (37.8°C), Outlet air temperature: 50°F (10°C), Ambient temperature: 100°F (37.8°C)

K Option symbol
For medium air pressure (Auto drain bowl: Metal bowl with level gauge) — IDFB6E to 37E

The auto drain is changed from the standard one to one with a medium pressure specification.
A metal bowl with a level gauge which can confirm the water level is used for the auto drain.

Specifications
1. Maximum operating pressure: 240 psi (1.6 MPa)
2. Dimensions ··· same as standard products

Replacement Parts

Model	Auto drain assembly part no.	Note
IDFB6E to 15E-11N	IDF-S0201	The AD48-8Z-X2110 auto drain, insulator, and one-touch fitting are included.
IDFB22E, 37E-□N	AD48-8Z-X2110	One-touch fitting (KQ2H11-02S) is not included.
IDFB6E to 15E-11	IDF-S0086	The AD48-8-X2110 auto drain, insulator, and one-touch fitting are included.
IDFB22E, 37E-□	AD48-8-X2110	One-touch fitting (KQ2H10-02S) is not included.

L Option symbol
With heavy duty auto drain (Suitable for medium air pressure) — IDFB55E, 75E

More thorough drain discharge can be achieved by replacing the float type auto drain (used with standard equipment) with a heavy duty auto drain (ADH4000-04).
(The external dimensions are identical with the standard product.)

Maximum operating pressure: 240 psi (1.6 MPa)

Replacement Parts

Model	Replacement part no. (Description)	Configuration
IDFB55E, 75E	ADH-E400 (Exhaust mechanism replacement kit)	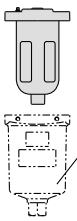 Exhaust mechanism replacement kit; Housing (a mounted unit is used)

R Option symbol
With circuit breaker — IDFB4E to 75E

A circuit breaker with cover is attached to the side of the air dryer. This saves additional electrical wiring at the time of installation.

IDFB4E to 15E

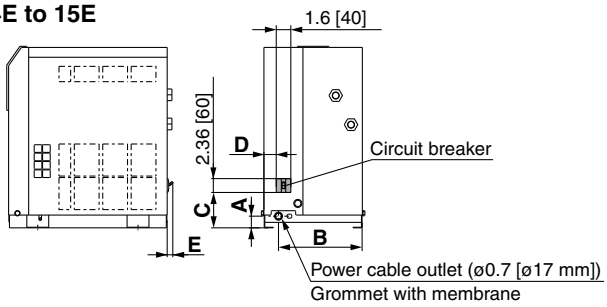

Dimensions Unit: inch [mm]

Model	A	B	C	D	E
IDFB4E, 6E, 8E, 11E	1.3 [32]	9.0 [230]	3.8 [97]	1.3 [34]	0.6 [15]
IDFB15E	1.7 [43]	10.2 [258]	4.0 [102]	3.2 [82]	—

IDFB22E to 75E

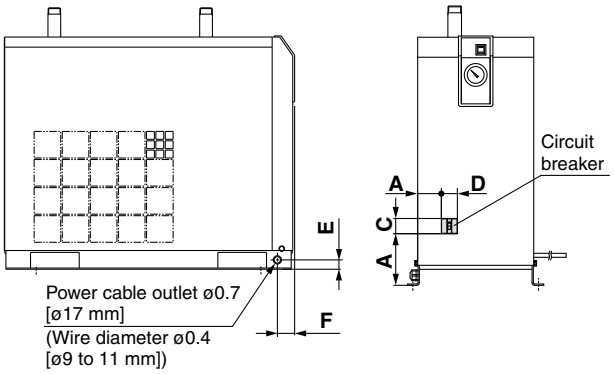

Dimensions Unit: inch [mm]

Model	A	B	C	D	E	F
IDFB22E, 37E	4.9 [125]	2.3 [59]	2.4 [60]	1.6 [40]	1 [25]	1.8 [46]
IDFB55E, 75E	5.7 [145]	2.2 [56]	3.8 [96]	2.4 [60]	2 [50]	1.4 [36]

Breaker Capacity and Sensitivity Current

Model	Breaker capacity	Sensitivity current
IDFB4E to 37E	15 A	30 mA
IDFB55E, 75E	10 A	30 mA

Optional Specifications 2

Refer to "How to Order" pages 3 and 7 for optional models.

T — With terminal block for power supply, run & alarm signal and remote operation

Option symbol

IDFB4E to 75E

In addition to the terminals for the power supply, terminals for the operating signal and the error signal are also available. (No-voltage contact)
Also, in case of remote control, operate it from the power supply side while the air dryer switch remains ON.

Contact capacity: 230 VAC, 4 A 24 VDC, 5 A for operating and error signals.
Minimum current value: 20 V, 5 mA (AC/DC) for operating and error signals.

Note) Please be sure to confirm the electric circuits with the drawings or instruction manual before using the output signal.

IDFB4E to 15E

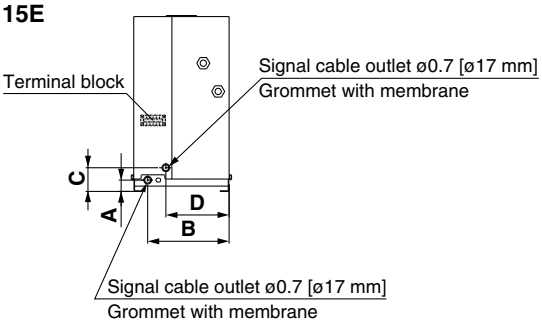

Dimensions Unit: inch [mm]

Model	A	B	C	D
IDFB4E, 6E, 8E, 11E	1.3 [32]	9.0 [230]	2.6 [67]	7.0 [179]
IDFB15E	1.7 [43]	10.2 [258]	3.0 [77]	6.2 [158]

IDFB22E to 75E

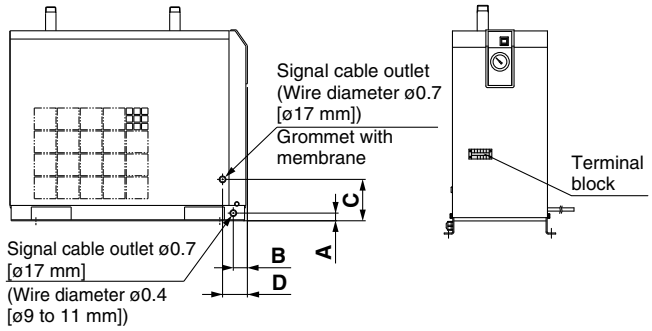

Dimensions Unit: inch [mm]

Model	A	B	C	D
IDFB22E, 37E	1 [25]	1.8 [46]	5.3 [135]	3.2 [81]
IDFB55E, 75E	2 [50]	1.4 [36]	10.6 [270]	

V — Timer type solenoid valve with auto drain (Suitable for medium air pressure)

Option symbol

IDFB4E to 75E

Drainage is discharged by controlling a solenoid valve with a timer.
A strainer for solenoid valve protection and stop valve are also included.
(The external dimensions are identical with the standard product.)

Maximum operating pressure: 240 psi (1.6 MPa)

∗ The timer type solenoid valve actuates once (for 0.5 seconds) every 30 seconds.

Replacement Parts

Model	Part no.	Note
IDFB4E to 22E-11□	IDF-S0199	115 VAC
IDFB22E, 37E-23□	IDF-S0198	230 VAC
IDFB55E, 75E-46□	IDF-S0302	230 VAC

Accessory (Option)

	Features	Specifications	Applicable dryer
Dust-protecting filter set	Prevents a decline in the performance of the air dryer, even in a dusty atmosphere.	Max. ambient temperature 104°F (40°C)	IDFB3E to 75E

How to Order

Dust-protecting filter set

IDF — FL 209

Applicable dryer

Symbol	Applicable dryer
209	IDFB3E
203	IDFB4E IDFB6E
204	IDFB8E
205	IDFB11E
206	IDFB15E
208	IDFB22E IDFB37E
213	IDFB55E
214	IDFB75E

Dust-protecting Filter Set/Dimensions

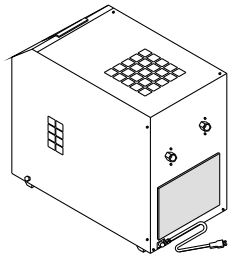

(IDF-FL209)

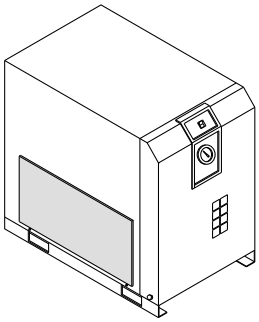

(IDF-FL203 to 208, 213, 214)

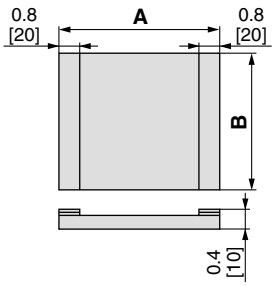

Dimensions Unit: inch [mm]

Part no.	Applicable dryer	A	B	Mass lb [g]
IDF-FL209	IDFB3E	8.7 [220]	9.4 [240]	0.08 [35]
IDF-FL203	IDFB4E IDFB6E	14.8 [375]	7.7 [195]	0.12 [55]
IDF-FL204	IDFB8E	13.3 [340]	10.4 [265]	0.15 [70]
IDF-FL205	IDFB11E	14.8 [375]		0.17 [75]
IDF-FL206	IDFB15E	12.2 [310]	10.6 [270]	0.15 [70]
IDF-FL208	IDFB22E IDFB37E	21.7 [550]	14.4 [365]	0.31 [140]
IDF-FL213	IDFB55E	28.3 [720]	15.7 [400]	0.39 [175]
IDF-FL214	IDFB75E	24 [610]	22 [560]	0.42 [190]

Safety Instructions

These safety instructions are intended to prevent hazardous situations and/or equipment damage. These instructions indicate the level of potential hazard with the labels of **"Caution," "Warning"** or **"Danger."** They are all important notes for safety and must be followed in addition to International Standards (ISO/IEC), Japan Industrial Standards (JIS)*1) and other safety regulations*2).

* 1) ISO 4414: Pneumatic fluid power – General rules relating to systems.
ISO 4413: Hydraulic fluid power – General rules relating to systems.
IEC 60204-1: Safety of machinery – Electrical equipment of machines. (Part 1: General requirements)
ISO 10218-1992: Manipulating industrial robots -Safety.
JIS B 8370: General rules for pneumatic equipment.
JIS B 8361: General rules for hydraulic equipment.
JIS B 9960-1: Safety of machinery – Electrical equipment of machines. (Part 1: General requirements)
JIS B 8433-1993: Manipulating industrial robots - Safety.
etc.
* 2) Labor Safety and Sanitation Law, etc.

⚠ Caution: Operator error could result in injury or equipment damage.

⚠ Warning: Operator error could result in serious injury or loss of life.

⚠ Danger : In extreme conditions, there is a possibility of serious injury or loss of life.

⚠ Warning

1. **The compatibility of the product is the responsibility of the person who designs the equipment or decides its specifications.**
   Since the product specified here is used under various operating conditions, its compatibility with specific equipment must be decided by the person who designs the equipment or decides its specifications based on necessary analysis and test results. The expected performance and safety assurance of the equipment will be the responsibility of the person who has determined its compatibility with the product. This person should also continuously review all specifications of the product referring to its latest catalog information, with a view to giving due consideration to any possibility of equipment failure when configuring the equipment.
2. **Only personnel with appropriate training should operate machinery and equipment.**
   The product specified here may become unsafe if handled incorrectly. The assembly, operation and maintenance of machines or equipment including our products must be performed by an operator who is appropriately trained and experienced.
3. **Do not service or attempt to remove product and machinery/equipment until safety is confirmed.**
   1. The inspection and maintenance of machinery/equipment should only be performed after measures to prevent falling or runaway of the driven objects have been confirmed.
   2. When the product is to be removed, confirm that the safety measures as mentioned above are implemented and the power from any appropriate source is cut, and read and understand the specific product precautions of all relevant products carefully.
   3. Before machinery/equipment is restarted, take measures to prevent unexpected operation and malfunction.
4. **Contact SMC beforehand and take special consideration of safety measures if the product is to be used in any of the following conditions.**
   1. Conditions and environments outside of the given specifications, or use outdoors or in a place exposed to direct sunlight.
   2. Installation on equipment in conjunction with atomic energy, railways, air navigation, space, shipping, vehicles, military, medical treatment, combustion and recreation, or equipment in contact with food and beverages, emergency stop circuits, clutch and brake circuits in press applications, safety equipment or other applications unsuitable for the standard specifications described in the product catalog.
   3. An application which could have negative effects on people, property, or animals requiring special safety analysis.
   4. Use in an interlock circuit, which requires the provision of double interlock for possible failure by using a mechanical protective function, and periodical checks to confirm proper operation.

Safety Instructions

⚠Caution

The product is provided for use in manufacturing industries.
The product herein described is basically provided for peaceful use in manufacturing industries.
If considering using the product in other industries, consult SMC beforehand and exchange specifications or a contract if necessary. If anything is unclear, contact your nearest sales branch.

Limited Warranty and Disclaimer/Compliance Requirements

The product used is subject to the following “Limited Warranty and Disclaimer” and “Compliance Requirements”. Read and accept them before using the product.

Limited Warranty and Disclaimer

1. **The warranty period of the product is 1 year in service or 1.5 years after the product is delivered.*3)**
   Also, the product may have specified durability, running distance or replacement parts. Please consult your nearest sales branch.
2. **For any failure or damage reported within the warranty period which is clearly our responsibility, a replacement product or necessary parts will be provided.**
   This limited warranty applies only to our product independently, and not to any other damage incurred due to the failure of the product.
3. **Prior to using SMC products, please read and understand the warranty terms and disclaimers noted in the specified catalog for the particular products.**

   ∗ 3) Vacuum pads are excluded from this 1 year warranty.
   A vacuum pad is a consumable part, so it is warranted for a year after it is delivered.
   Also, even within the warranty period, the wear of a product due to the use of the vacuum pad or failure due to the deterioration of rubber material are not covered by the limited warranty.

Compliance Requirements

When the product is exported, strictly follow the laws required by the Ministry of Economy, Trade and Industry (Foreign Exchange and Foreign Trade Control Law).

Series IDFB□E
Specific Product Precautions 1

Be sure to read this before handling. For Air Preparation Equipment Precautions, refer to "Precautions for Handling Pneumatic Devices" (M-03-E3A).

Installation

⚠ Caution

- Avoid locations where the air dryer will be in direct contact with wind and rain. (Avoid locations where relative humidity is greater than 85%.)
- Avoid exposure to direct sunlight.
- Avoid locations that contain much dust, corrosive gases, or flammable gases. Failure due to corrosion is not covered under warranty.
- Avoid locations of poor ventilation and high temperature.
- Allow ample space around the air dryer.
- Avoid locations where a dryer could draw in high temperature air that is discharged from an air compressor or other dryer.
- Avoid locations subjected to vibration.
- Avoid possible locations where the drain can freeze.
- Use the air dryer with an ambient temperature lower than 104°F (40°C).
- Avoid installation on machines for transporting, such as trucks, ships, etc.

Drain Tube

⚠ Caution

- A polyurethane tube is attached as a drain tube for the IDFB3E to 75E. Use this tube to discharge drainage.
- Do not use the drain tube in an upward direction. Do not bend or crush the drain tube. (The auto drain will not be activated and water will try to escape via the air outlet.)

Power Supply

⚠ Caution

- Connect the power supply to the terminal block.
- Install a suitable circuit breaker applicable for the specific model.
- The voltage fluctuation should be maintained within ±10% of the rated voltage.

Air Piping

⚠ Caution

- Be careful to avoid an error in connecting the air piping at the compressed air inlet (IN) and outlet (OUT).
- Install by-pass piping since it is needed for maintenance.

IDFB3E

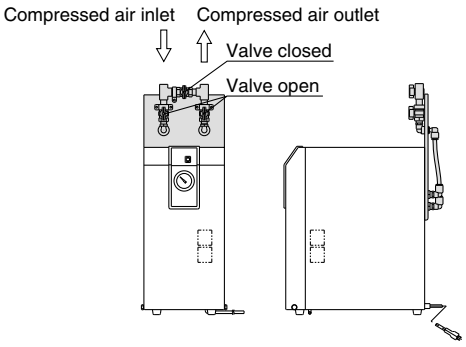

Air Piping

⚠ Caution

IDFB4E to 15E

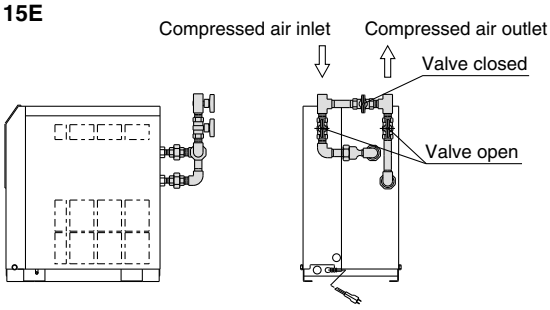

IDFB22E, 37E

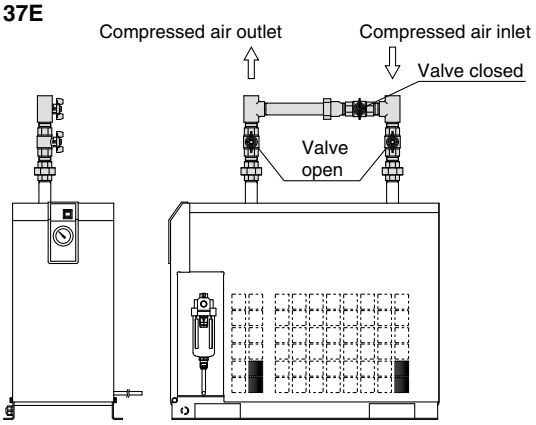

IDFB55E, 75E

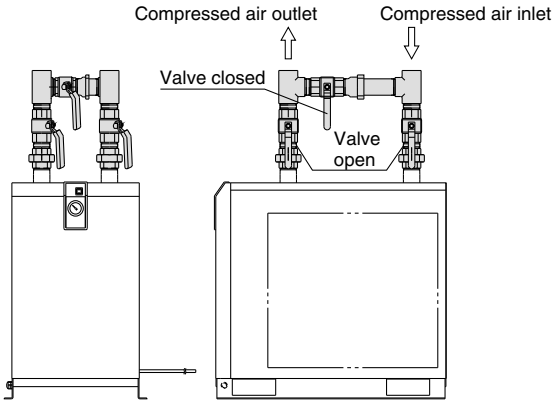

- When tightening piping at the air inlet/outlet tube, the hexagonal parts of the port on the air dryer side or piping should be held firmly with a spanner or adjustable angle wrench.
- Variations in operating conditions may cause condensation to form at the surface of the outlet piping. Apply thermal insulation around the piping to prevent condensation from forming.
- Vibration resulting from the compressor should not be transmitted through air piping to the air dryer.
- Do not allow the weight of the piping to lie directly on the air dryer.

Series IDFB□E
Specific Product Precautions 2

Be sure to read this before handling. For Air Preparation Equipment Precautions, refer to "Precautions for Handling Pneumatic Devices" (M-03-E3A).

Protection Circuit

⚠ Caution

When the air dryer is operated under the following stated conditions, a protection circuit is activated, the light turns off and operation stops.

- When the compressed air temperature is too high.
- When the compressed air flow rate is too high.
- When the ambient temperature is too high. (104°F (40°C) or higher)
- When the fluctuation of the power supply is beyond the rated voltage ±10%.
- When the dryer is drawing in high temperature air that is discharged from an air compressor or other dryer.
- The ventilation port is obstructed by a wall or clogged with dust.

Compressor Air Delivery

⚠ Caution

Use the air compressor with an air delivery of 3.5 SCFM (6 m^3/h) or larger for the IDFB3E to 75E series.

Since the auto drain of the IDFB3E to 75E series is designed in such a way that the valve remains open unless the air pressure rises to 22 psi (0.15 MPa) or higher, air will blow out from the drain discharge port when the air compressor starts up until the pressure increases. Therefore, if the air compressor has a small air delivery, the pressure may not be sufficient.

Auto Drain

⚠ Caution

The auto drain may not function properly, depending on the quality of the compressed air. Check the operation once a day.

Cleaning of Ventilation Area

⚠ Caution

Remove dust from the ventilation area once a month using a vacuum cleaner or an air blow nozzle.

Time Delay for Restarting

⚠ Caution

Allow at least three minutes before restarting the dryer. If the air dryer is restarted within three minutes after being stopped, the protection circuit will be activated, operating light will turn off and the dryer will not be activated.

Air Dryers for Use in Japan

Complies with CFC restrictions Refrigerated Air Dryer *Series IDF*

Standard temperature air inlet type

Rated inlet air temperature:
35, 40°C

Model	Rated inlet condition	Air flow capacity (m³/min [ANR])		Applicable air compressor (kW)	Refrigerant	Port size
		50 Hz	60 Hz			
IDF1E	35°C 0.7 MPa	0.1	0.12	0.75	R134a (HFC)	Rc 3/8
IDF2E		0.2	0.235	1.5		
IDF3E		0.32	0.37	2.2		
IDF4E		0.52	0.57	3.7		Rc 1/2
IDF6E		0.75	0.82	5.5		Rc 3/4
IDF8E		1.22	1.32	7.5		
IDF11E		1.65	1.82	11		
IDF15E		2.8	3.1	15		Rc 1
IDF22E		3.9	4.3	22	R407C (HFC)	R 1
IDF37E		5.7	6.1	37		R 1 1/2
IDF55E	40°C 0.7 MPa	8.4	9.8	55		R 2
IDF75E		11.0	12.4	75		
IDF120D		20.0	23.0	120		2 1/2B flange
IDF150D		25.0	30.0	150		3B flange
IDF190D		32.0	38.0	190		
IDF240D		43.0	50.0	240		4B flange

Complies with CFC restrictions Refrigerated Air Dryer *Series IDU*

High temperature air inlet type

Rated inlet air temperature:
55°C

Model	Rated inlet condition	Air flow capacity (m³/min [ANR])		Applicable air compressor (kW)	Refrigerant	Port size
		50 Hz	60 Hz			
IDU3E	55°C 0.7 MPa	0.32	0.37	2.2	R134a (HFC)	Rc 3/8
IDU4E		0.52	0.57	3.7		Rc 1/2
IDU6E		0.75	0.82	5.5		Rc 3/4
IDU8E		1.1	1.2	7.5		
IDU11E		1.5	1.7	11		
IDU15E		2.6	2.8	15		Rc 1
IDU22E		3.9	4.3	22	R407C (HFC)	R 1
IDU37E		5.7	6.1	37		R 1 1/2
IDU55E		8.4	9.8	55		R 2
IDU75E		11.0	12.5	75		

∗ See separate catalog.

Air Dryers Compliant to Overseas Standards

Refrigerated Air Dryer *Series IDFA□E*

For use in Europe, Asia and Oceania

CE

EC Directive compliant (with CE marking)

Power supply voltage: Single-phase 230 VAC (50 Hz)

Refrigerant:
R134a (HFC)
R407C (HFC)
Coefficient of destruction for ozone is zero.

Improved corrosion resistance with the use of stainless steel, plate type heat exchanger
[IDFA4E to 75E]

Model	Air flow capacity (m^3/h [ANR]) Outlet air pressure dew point			Refrigerant	Rated inlet condition	Port size
	3°C	7°C	10°C			
IDFA3E	12	15	17	R134a (HFC)	35°C 0.7 MPa	Rc 3/8
IDFA4E	24	31	34			Rc 1/2
IDFA6E	36	46	50			Rc 3/4
IDFA8E	65	83	91			
IDFA11E	80	101	112			
IDFA15E	120	152	168			Rc 1
IDFA22E	182	231	254	R407C (HFC)		R 1
IDFA37E	273	347	382			R 1 1/2
IDFA55E	390	432	510			R 2
IDFA75E	660	720	822			

∗ See separate catalog.

Related Products

Membrane Air Dryer *Series IDG*

(For use in cases where a power supply is not provided)

Dew point indicator for checking air drying condition at a glance
(Except IDG1)
(The IDG3, IDG5, IDG3H, IDG5H are semi-standard.)

- **Compact**
- **Lightweight**
- **Space-saving**

Fitting for discharging purge air available
Purge air can be discharged with a tube if it should not be discharged around the membrane air dryer (semi-standard).

Discharged air noise reduced with built-in silencer
[Except IDG1, IDG3, IDG3H, IDG5, IDG5H, IDG30, IDG30H, IDG30L, IDG50, IDG50H, IDG50L]

No need for a power supply
A power supply is not necessary at all. Saves time and effort for wiring, and there is no need to consider electrical standards.

No vibration nor heat discharge
No mechanically moving parts such as refrigerator

Suitable for a low dew point
Outlet air atmospheric pressure dew point: –40°C
[IDG30L, IDG50L, IDG60L, IDG75L, IDG100L]
Outlet air atmospheric pressure dew point: –60°C
[IDG60S, IDG75S, IDG100S]

Outlet air flow rate 10 to 1000 ℓ/min (ANR)

∗ See separate catalog.

Heatless Air Dryer *Series ID*

(For use in cases where a low dew point is necessary)

Heatless type ID series is ideal for applications that require dry air with a low dew point.

Supplies dry air with a low dew condensation point of –30°C or less.

Small and light without heater and electric control panel

Possible to check outlet dew point with indicator
(Self-regenerative style allows easy maintenance.)

Outlet air flow rate 80 to 780 ℓ/min (ANR)

∗ See separate catalog.

Record of changes	
B edition	∗ Addition of Refrigerated Air Dryers IDFB55E, 75E. ∗ Number of pages from 20 to 24. MQ

⚠ Safety Instructions	Be sure to read “Precautions for Handling Pneumatic Devices” (M-03-E3A) before using.

SMC Corporation

Akihabara UDX 15F,
4-14-1, Sotokanda, Chiyoda-ku, Tokyo 101-0021, JAPAN
Phone: 03-5207-8249 Fax: 03-5298-5362
URL http://www.smcworld.com

© 2008 SMC Corporation All Rights Reserved

Specifications are subject to change without prior notice
and any obligation on the part of the manufacturer.

D-DN 1st printing KZ printing MQ 13500DN Printed in Japan.

This catalog is printed on recycled paper with concern for the global environment.

Refrigerated Air Dryer Large Size Series New

IDF125F/150F are added! New

Tolerant of high temperature environment!

Top of its class in the industry for the large air-cooled type

Doesn't stop even in high-temperature environments such as compressor rooms!

Ambient temperature 45°C at max. [Conventional large type: 40°C]

Inlet air temperature 60°C at max. [Conventional large type: 50°C]

Energy saving design with secondary heater (SMC's original new design!)

[Patent Pending]

Exhaust heat reduced by 25% at max. (12 kW→9 kW)

Ambient temperature increase suppressed (Air-cooled type)

Facility water reduced (Water-cooled type)

Employs a heat exchanger made of high corrosion-resistant stainless steel.

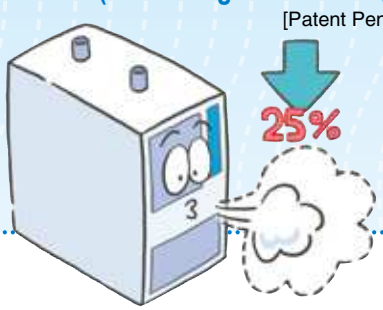

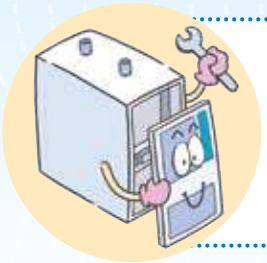

Maintenance

- Dustproof filter
- With a lamp to indicate when to check the dustproof filter
- Only access from front side is required to check electrical equipment and dustproof filter.

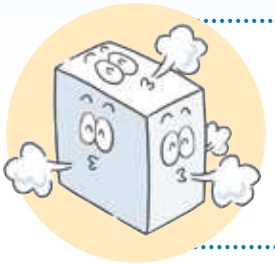

Selection of layout

[Air-cooled type]

Exhausting direction can be selected from **four directions**!!

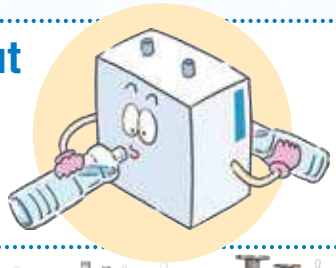

[Water-cooled type]

Facility water piping port can be selected from **two directions**!!

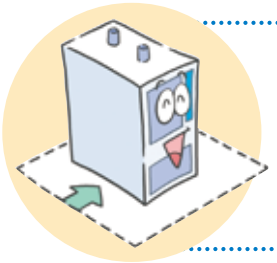

Space saving

One side can be installed flat against a wall!

Installation space reduced by **1.5 m²** at max!! (IDF100F)

Air-cooled type Water-cooled type

Model	Refrigeration method	Rated inlet condition	Air flow capacity (m³/min [ANR]) Standard condition (ANR) 50 Hz	Standard condition (ANR) 60 Hz	Compressor intake condition 50 Hz	Compressor intake condition 60 Hz	Applicable air compressor (kW)	Refrigerant	Port size
IDF100F-30	Air-cooled	40°C 0.7 MPa	16	18.8	16.7	19.6	100	R407C (HFC)	R2
IDF100F-30-W	Water-cooled								
IDF125F-30	Air-cooled		20.1	23.7	20.9	24.7	125		65A flange
New IDF125F-30-W	Water-cooled								
IDF150F-30	Air-cooled		25	30	26	31.2	150		80A flange
IDF150F-30-W	Water-cooled								

Series IDF100F/125F/150F

Refrigerant R407C (HFC)

SMC

Tolerant of high temperature environment (ambient temperature 45°C), Energy saving design!

Air-cooled type can be used at ambient temperature 45°C.

Secondary heater helps the heat radiation of the condenser allows use at ambient temperature 45°C.

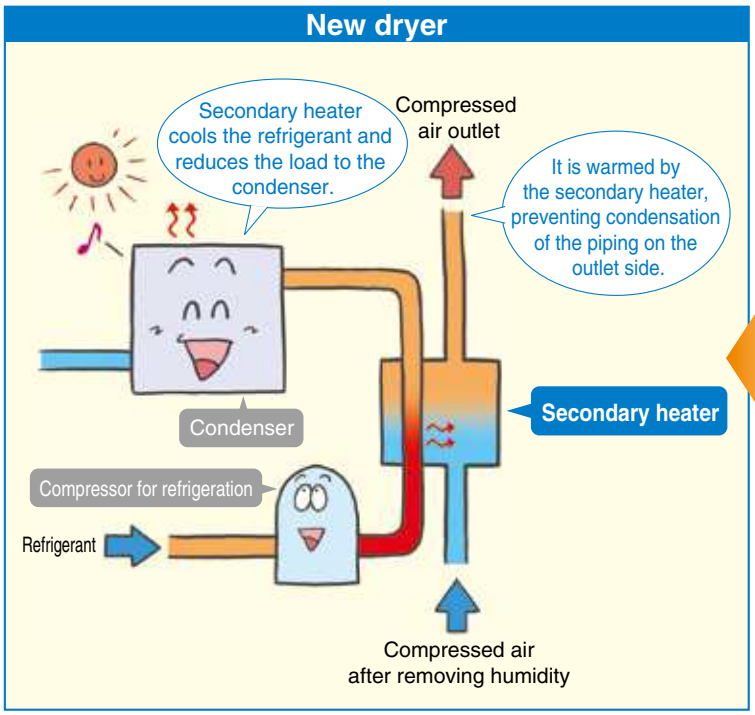

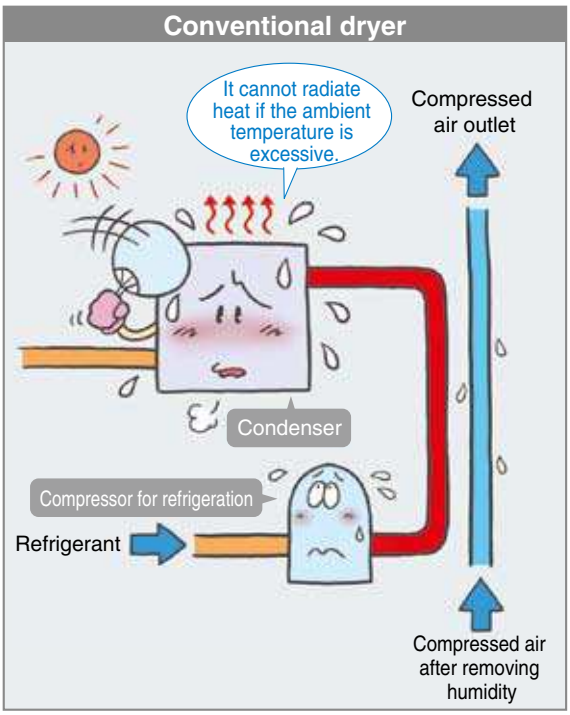

[Patent Pending]

Energy saving design: Reduces exhaust heat from dryer by 25% at max.

Suppresses ambient temperature increase (air-cooled type), Reduces amount of facility water (water-cooled type)!

Secondary heater reduces the load to the condenser, and reduces exhaust heat from dryer by 25% at max. (comparison with other SMC products)

Reduction of exhaust heat achieves downsizing and energy saving operation of the air conditioner!

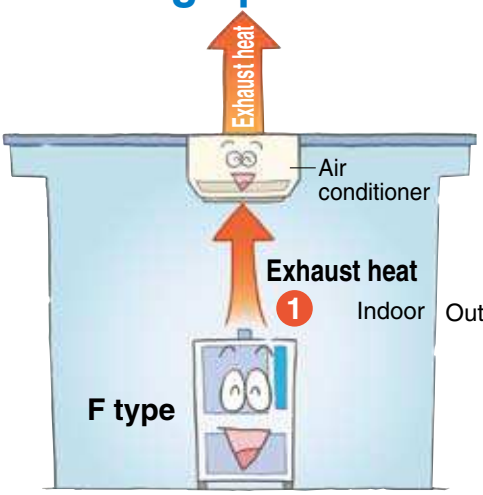

New dryer
(With secondary heater)

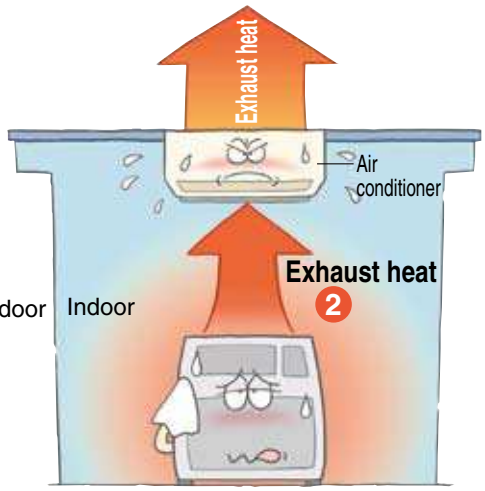

Conventional dryer
(Without secondary heater)

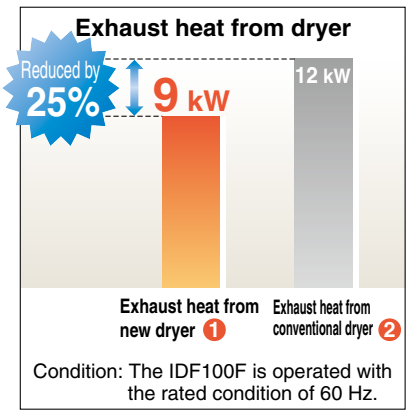

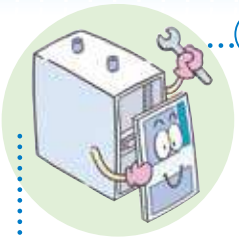

Maintenance

- Dustproof filter
- Only access from front side is required to check electrical equipment and dustproof filter.

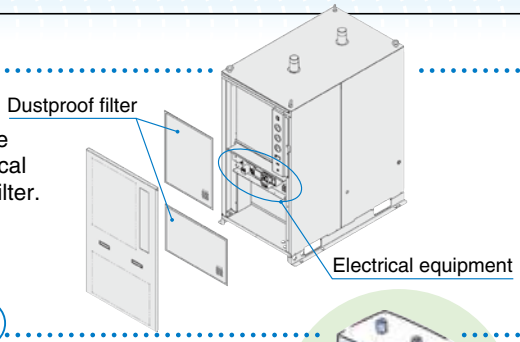

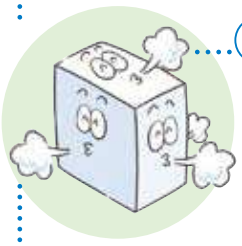

Selection of layout

[Air-cooled type]

Exhausting direction can be selected from **four directions**!!
Auto drain tube can be connected in **two directions**, left or right.

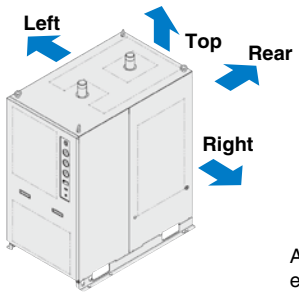

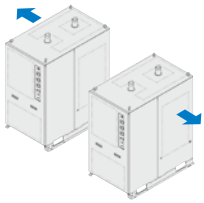

Avoid exhausting air onto adjacent equipment.

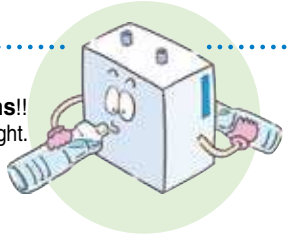

[Water-cooled type]

Facility water piping port can be selected from **two directions**!!

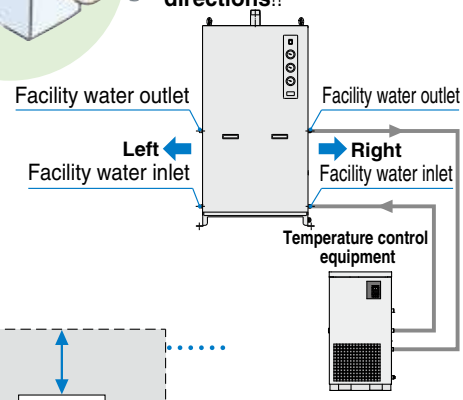

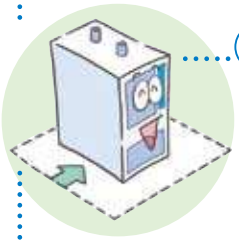

Space saving

Either the left or right can be installed flat against a wall! Note)
Installation space reduced by **1.5 m²** at max!!

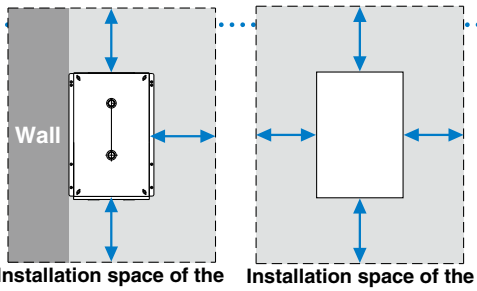

Installation space of the IDF100F (Example: Installed flat against the wall on the left)

Installation space of the conventional type

Note) For air-cooled type, leave a space of at least 600 mm between the heat exhausting face and the wall.
For water-cooled type, leave a space at least 600 mm between the facility water piping side and the wall.
Leave at least 600 mm on the sides indicated with ↔.

SMC Air Dryer Variations

Large size Series IDF□F/D/B

Tolerant of high temperature environment!

Can be used with **ambient temperature 45°C at max. and inlet air temperature 60°C at max.**, making it top of its class in the industry for the large air-cooled type.

Air-cooled type Water-cooled type

Energy saving design

Exhaust heat reduced by 25% at max.
Ambient temperature increase suppressed (Air-cooled type)
Facility water reduced (Water-cooled type)
Employs a heat exchanger made of high corrosion-resistant stainless steel.

Model	Rated inlet condition	Applicable air compressor (kW)	Port size
IDF100F	40°C 0.7 MPa	100	R2
IDF125F		125	65A flange
IDF150F		150	80A flange

∗ The separate catalog for dryer models conforming with foreign standards (CE) is available.

Model	Rated inlet condition	Applicable air compressor (kW)	Port size
IDF190D	40°C 0.7 MPa	190	80A flange
IDF240D		240	100A flange
IDF370B	35°C 0.7 MPa	370	150A flange

Standard Series IDF□E/IDU□E

- Air flow capacity **Increased by 40% at max.** (SMC comparison)
- Power consumption **Reduced by 40% at max.** (SMC comparison)
- Employs a heat exchanger made of high corrosion-resistant stainless steel.

(IDF4E to 75E / IDU3E to 75E)

Model	Rated inlet condition	Applicable air compressor (kW)	Port size
IDF1E	35°C 0.7 MPa	0.75	Rc3/8
IDF2E		1.5	
IDF3E		2.2	
IDF4E		3.7	Rc1/2
IDF6E		5.5	Rc3/4
IDF8E		7.5	
IDF11E		11	
IDF15E1		15	Rc1
IDF22E		22	R1
IDF37E		37	R1 1/2
IDF55E	40°C 0.7 MPa	55	R2
IDF75E		75	
IDU3E	55°C 0.7 MPa	2.2	Rc3/8
IDU4E		3.7	Rc1/2
IDU6E		5.5	Rc3/4
IDU8E		7.5	
IDU11E		11	
IDU15E1		15	Rc1
IDU22E		22	R1
IDU37E		37	R1 1/2
IDU55E		55	R2
IDU75E		75	

IDF□E

IDU□E

∗ The separate catalog for dryer models conforming with foreign standards (CE and UL) is available.

Series IDF100F/125F/150F
Model Selection

The corrected air flow capacity, which considers the user's operating conditions, is required for selecting air dryer. Select using the following procedures.

1 Read the correction factors.

Obtain the correction factors Ⓐ to Ⓓ suitable for your operating condition from the below table.

IDF100F/125F/150F Selection Example

Condition		Data symbol	Correction factor Note)
Inlet air temperature	45°C	Ⓐ	0.92
Ambient temperature	40°C	Ⓑ	0.98
Outlet air pressure dew point	10°C	Ⓒ	1
Inlet air pressure	0.5 MPa	Ⓓ	0.93
Air flow rate	12 m³/min	—	—
Power supply frequency	50 Hz	—	—

Note) Values obtained from the below "Correction Factors"

2 Check the coefficient.

Correction factor = 0.92 x 0.98 x 1 x 0.93 = 0.84
Max. coefficient value is 1.5 Correction factor is 1.5 when the calculation result is 1.5 or greater.

3 Calculate the corrected air flow capacity.

Obtain the corrected air flow capacity from the following formula.
Corrected air flow capacity = Air flow rate ÷ (correction factor Ⓐ x Ⓑ x Ⓒ x Ⓓ)

Corrected air flow capacity = 12 m³/min ÷ (0.92 x 0.98 x 1 x 0.93)
= 14.3 m³/min

4 Select the model.

Select the model with air flow capacity which exceeds the corrected air flow capacity from the specification table. (For air flow capacity, refer to the below data Ⓔ.)

From the corrected air flow capacity 14.3 m³/min, the IDF100F which processes air 16 m³/min at 50 Hz will be selected.

5 Options

Refer to page 7.

6 Finalize the model number.

Refer to page 2.

7 Select the optional accessories.

Refer to page 8.

Correction Factors

Data Ⓐ: Inlet Air Temperature

Inlet air temp. (°C)	Correction factor
5 to 30	1.41
35	1.21
40	1
45	0.92
50	0.75
55	0.63
60	0.53

Data Ⓑ: Ambient Temperature Note)

Ambient temp. (°C)	Correction factor
2 to 25	1.06
30	1.02
32	1
35	0.99
40	0.98
45	0.92

Note) For water-cooled type, the correction factor should be 1 for 2 to 45°C.

Data Ⓒ: Outlet Air Pressure Dew Point

Outlet air pressure dew point (°C)	Correction factor
3	0.55
5	0.7
10	1
15	1.4

Data Ⓓ: Inlet Air Pressure

Inlet air pressure (MPa)	Correction factor
0.2	0.84
0.3	0.87
0.4	0.9
0.5	0.93
0.6	0.96
0.7	1
0.8	1.03
0.9	1.06
1 to 1.6	1.09

Data Ⓔ: Air Flow Capacity

Model		IDF100F	IDF125F	IDF150F
Air flow capacity (m³/min [ANR])	50 Hz	16	20.1	25
	60 Hz	18.8	23.7	30

Refrigerant R407C (HFC)

Series IDF100F/125F/150F

Applicable Compressor Size: 100 kW, 125 kW, 150 kW
(Max. inlet air temperature: 60°C, Max. ambient temperature: 45°C)

How to Order

Air-cooled IDF 100 F – 30 – [Nil / B / C / K / P / R / V] [Nil / 1 / 2 / 3]

Size

Size	Air compressor size Note)
100	100 kW
125	125 kW
150	150 kW

Note) Note that the above value is for reference only. Check the actual compressor capacity.

Voltage

Symbol	Voltage
30	Three-phase 200 VAC (50 Hz) 200/220 VAC (60 Hz)

Option

Symbol Note 1)	Description
Nil	None
B	Easy outdoor installation specification (Air-cooled type only) Note 2)
C	Anti-corrosive treatment for copper tube
K	Moderate pressure specification
P	With a metal name plate
R	With a circuit breaker
V	With a timer controlled solenoid valve type auto drain

Note 1) Enter alphabetically when multiple options are combined.
Note 2) The following combination is not available.
- The option B and heat exhausting direction 3 (Heat exhaust from the top cannot be achieved with easy outdoor installation specification.)

Heat exhausting direction

Symbol	Description
Nil	Heat exhaust from the rear
1	Heat exhaust from the right Note)
2	Heat exhaust from the left Note)
3	Heat exhaust from the top Note)

Note) The combination of 1, 2 and 3 is not available. (Heat exhausting face can be specified on one side only.)

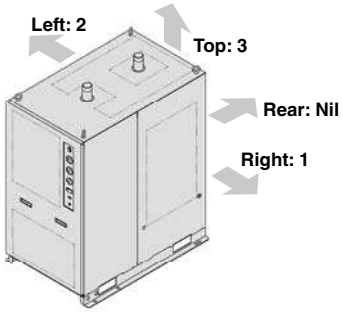

Water-cooled IDF 100 F – 30 – [Nil / C / D / K / P / R / V] W [4 / 5]

Size

Size	Air compressor size Note)
100	100 kW
125	125 kW
150	150 kW

Note) Note that the above value is for reference only. Check the actual compressor capacity.

Voltage

Symbol	Voltage
30	Three-phase 200 VAC (50 Hz) 200/220 VAC (60 Hz)

Option

Symbol Note)	Description
Nil	None
C	Anti-corrosive treatment for copper tube
D	Easy outdoor installation specification (Water-cooled type only)
K	Moderate pressure specification (1.6 MPa)
P	With a metal name plate
R	With a circuit breaker
V	With a timer controlled solenoid valve type auto drain

Note) Enter alphabetically when multiple options are combined.

Piping direction

Symbol	Description
4	Facility water piping direction: Right Note)
5	Facility water piping direction: Left Note)

Note) The combination of 4 and 5 is not available. (Piping direction can be specified on one side only.)

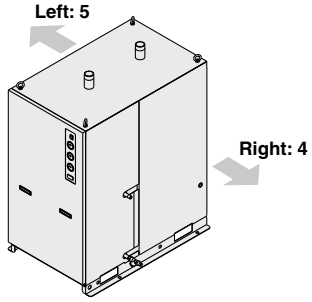

Cooling method

Symbol	Cooling method
W	Water-cooled condenser

Standard Specifications: Air-cooled Type

Specifications \ Model				IDF100F-30	IDF125F-30	IDF150F-30
Operating range Note 3)	Fluid			Compressed air		
	Inlet air temperature °C			5 to 60		
	Inlet air pressure MPa			0.15 to 1.0/0.15 to 1.6 for option K		
	Ambient temperature (humidity) °C			2 to 45 (Relative humidity 85% or less)		
Rated conditions	Air flow capacity m³/min	Standard condition (ANR) Note 1)	50 Hz	16	20.1	25
			60 Hz	18.8	23.7	30
		Compressor intake condition Note 2)	50 Hz	16.7	20.9	26
			60 Hz	19.6	24.7	31.2
	Inlet air pressure MPa			0.7		
	Inlet air temperature °C			40		
	Ambient temperature °C			32		
	Outlet air pressure dew point °C			10		
	Exhaust heat from condenser (50/60 Hz) kW			8.0/9.0	10.0/11.5	12.0/15.0
	Dryer outlet air temperature °C			37		
Electric specifications	Power supply voltage (frequency)			Three-phase 200 VAC (50 Hz), 200/220 VAC (60 Hz)		
	Power consumption (50/60 Hz) kW			2.9/3.5	4.0/4.7	4.0/4.8
	Operating current (50/60 Hz) A			10.5/11.5	15.4/15.6	15.7/16.0
Applicable circuit breaker capacity Note 4) A				30		
Refrigerant				R407C (HFC)		
Auto drain				Heavy duty auto drain (Normally open)		
Port size				R2	JIS flange 65A 10K	JIS flange 80A 10K
Weight kg				245	270	350
Coating color				Body panel: White 1 Base: Gray 2		
Applicable air compressor output (Reference) For screw type kW				100	125	150

Note 1) Air flow capacity under the standard condition (ANR) [atmospheric pressure 20°C, relative humidity 65%]
Note 2) Air flow capacity converted by the compressor intake condition [atmospheric pressure 32°C]
Note 3) The operation range does not guarantee the use with normal air flow capacity. When operating conditions are different from the rated specifications, please select a model in accordance with Model Selection (page 1).
Note 4) Install a circuit breaker with a sensitivity 30 mA.

JIS Symbol

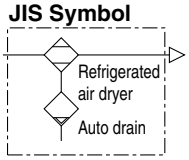

Replacement Parts

Air dryer model	IDF100F	IDF125F	IDF150F
Heavy duty auto drain replacement part no. Note 5)	ADH-E400		
Dustproof filter set for condenser	IDF-FL219		IDF-FL220

Note 5) Part number of only the exhaust mechanism replacement kit excluding the housing

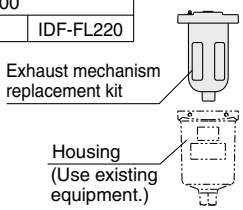

Construction (Air/Refrigerant Circuit)

Hot and humid air entering the air dryer is cooled down by the cooler re-heater (heat exchanger). The moisture which is condensed and separated is automatically exhausted by the auto drain. The air which has had its moisture removed is heated in two stages by the re-heater (heat exchanger) in the cooler re-heater and by the secondary heater, and is supplied to the outlet side as warm and dry air.

IDF100F/125F/150F

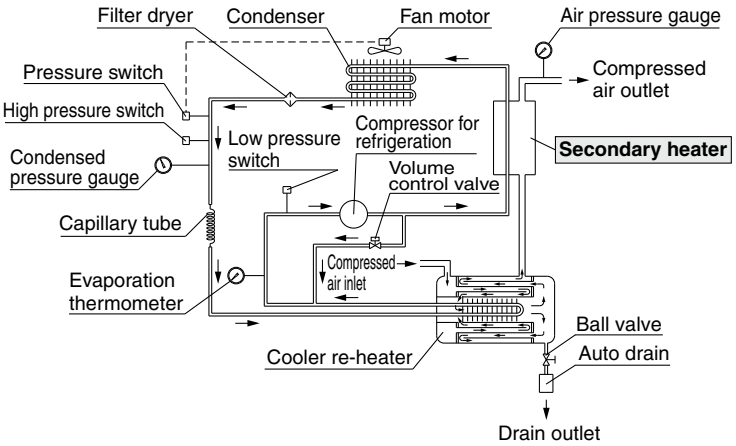

Secondary heater

Compressed air from which drainage has been exhausted exchanges heat with refrigerant which has been compressed by the refrigerator, to give the following effects:

1. The outlet air temperature increases, preventing condensation of the piping on the outlet side.
2. The amount of heat exhausted from the condenser is reduced.
3. Energy saving operation of the dryer is achieved by reducing the amount of heat exhausted from the condenser.

JIS Symbol

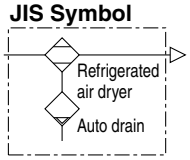

Standard Specifications: Water-cooled Type

Specifications \ Model				IDF100F-30-W	IDF125F-30-W	IDF150F-30-W
Operating range Note 3)	Fluid			Compressed air		
	Inlet air temperature		°C	5 to 60		
	Inlet air pressure		MPa	0.15 to 1.0/0.15 to 1.6 for option K		
	Ambient temperature (humidity)		°C	2 to 45 (Relative humidity 85% or less)		
Rated conditions	Air flow capacity m^3/min	Standard condition (ANR) Note 1)	50 Hz	16	20.1	25
			60 Hz	18.8	23.7	30
		Compressor intake condition Note 2)	50 Hz	16.7	20.9	26
			60 Hz	19.6	24.7	31.2
	Inlet air pressure		MPa	0.7		
	Inlet air temperature		°C	40		
	Ambient temperature		°C	32		
	Outlet air pressure dew point		°C	10		
	Dryer outlet air temperature		°C	37		
	Facility water flow rate Note 4) (50/60 Hz)		m^3/h	1.29/1.56	1.74/1.98	2.16/2.52
	Facility water inlet temperature		°C	32		
	Facility water pressure drop Note 5) (50/60 Hz)		MPa	0.07/0.1		
	Cooling tower capacity Note 6)		kW (RT)	9 (2)	11.5 (2.5)	14.5 (3.2)
	Recommended chiller model Note 6) (made by SMC)			HRG010-A	HRG015-A	
Electric specifications	Power supply voltage (frequency)			Three-phase 200 VAC (50 Hz), 200/220 VAC (60 Hz)		
	Power consumption Note 7) (50/60 Hz)		kW	2.4/2.8	2.4/2.8	2.8/3.3
	Operating current Note 7) (50/60 Hz)		A	8.5/9.0	8.5/9.0	10.2/11.5
Facility water pressure range			MPa	0.2 to 0.98		
Required facility water flow rate (50/60 Hz)			m^3/h	1.29/1.56	1.74/1.98	2.16/2.52
Facility water inlet temperature range			°C	5 to 40		
Facility water port size				R1/2		R3/4
Facility water amount adjusting equipment				Pressure type water control valve		
Condenser				Plate type		
Applicable circuit breaker capacity Note 8)			A	20		30
Refrigerant				R407C (HFC)		
Auto drain				Heavy duty auto drain (Normally open)		
Port size				R2	JIS flange 65A 10K	JIS flange 80A 10K
Weight			kg	226	250	322
Coating color				Body panel: White 1 Base: Gray 2		
Applicable air compressor output (Reference) For screw type			kW	100	125	150

Note 1) Air flow capacity under the standard condition (ANR) [atmospheric pressure 20°C, relative humidity 65%]
Note 2) Air flow capacity converted by the compressor intake condition [atmospheric pressure 32°C]
Note 3) The operation range does not guarantee the use with normal air flow capacity. When operating conditions are different from the rated specifications, please select a model in accordance with Model Selection (page 1).
Note 4) Facility water flow rate that satisfies the conditions in which the facility water inlet temperature is 32°C and the outlet temperature is 37°C (⊿t = 5°C) when the rated load is applied.
Note 5) Value with the rated load, facility water flow rate at rated flow rate and the facility water inlet pressure 0.2 MPa
Note 6) Value with the rated load (1 RT = 4.535 kW)
Note 7) Value with the power supply voltage 200 V
Note 8) Install a circuit breaker with a sensitivity 30 mA.

Replacement Parts

Air dryer model	IDF100F-W	IDF125F-W	IDF150F-W
Heavy duty auto drain replacement part no. Note 9)	ADH-E400		
Facility water piping strainer	IDF-S0406		IDF-S0418

Note 9) Part number of only the exhaust mechanism replacement kit excluding the housing

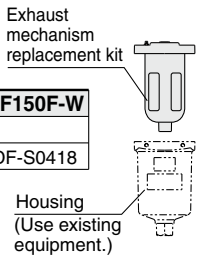

Construction (Air/Refrigerant Circuit)

IDF100F-W
IDF125F-W
IDF150F-W

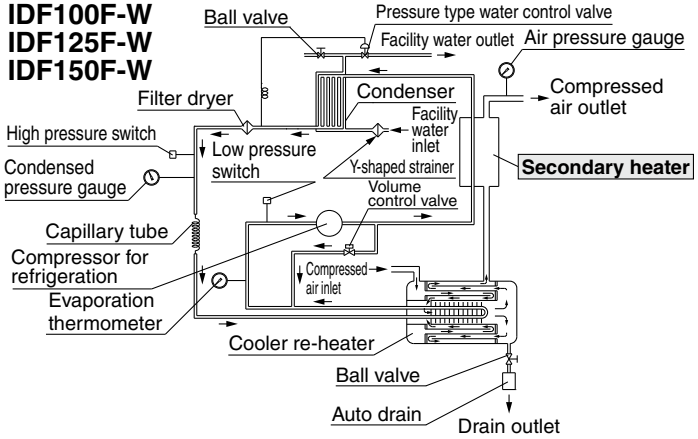

Hot and humid air entering the air dryer is cooled down by the cooler re-heater (heat exchanger). The moisture which is condensed and separated is automatically exhausted by the auto drain. The air which has had its moisture removed is heated in two stages by the re-heater (heat exchanger) in the cooler re-heater and by the secondary heater, and is supplied to the outlet side as warm and dry air.

Secondary heater

Compressed air from which drainage has been exhausted exchanges heat with refrigerant which has been compressed by the refrigerator, to give the following effects:

1. The outlet air temperature increases, preventing condensation of the piping on the outlet side.
2. The amount of heat exhausted from the condenser is reduced.
3. Energy saving operation of the dryer is achieved by reducing the amount of heat exhausted from the condenser.

Dimensions

IDF100F: Air-cooled type

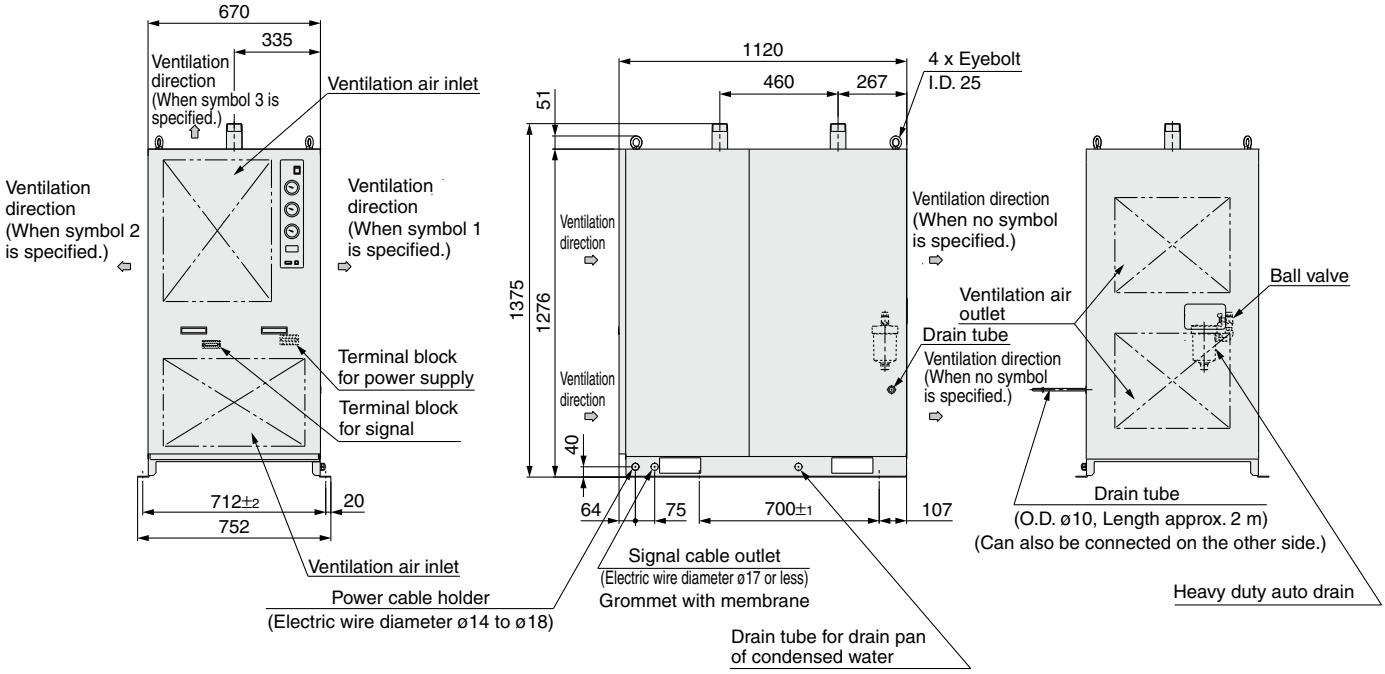

IDF100F-W: Water-cooled type

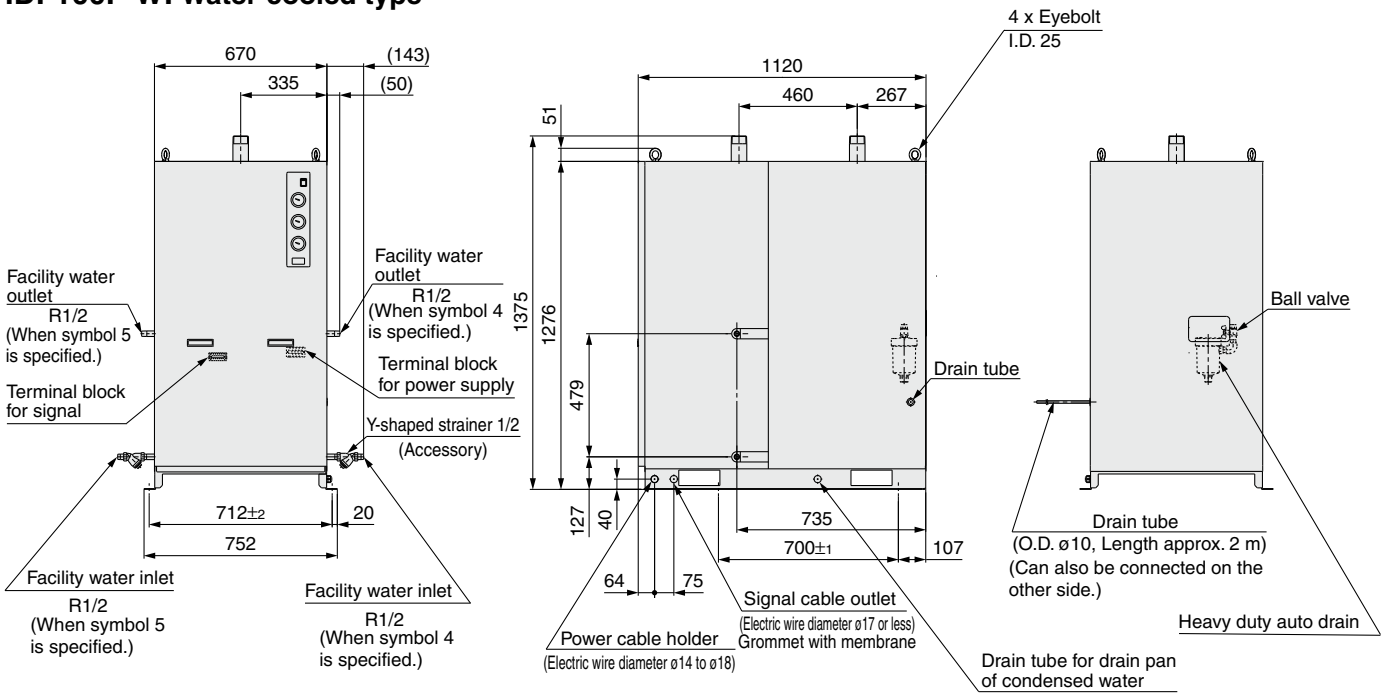

Operating Parts

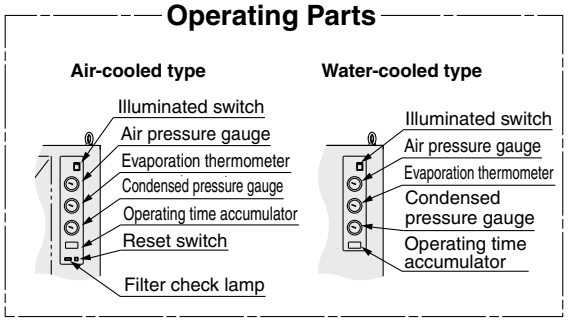

Top view (Air-cooled/Water-cooled)

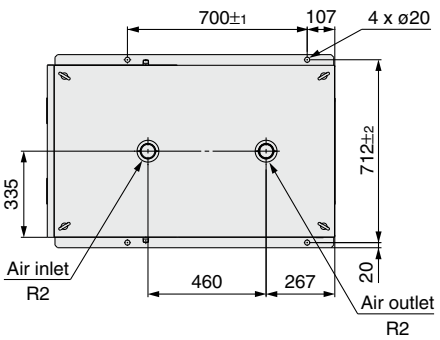

Dimensions

IDF125F/150F: Air-cooled type

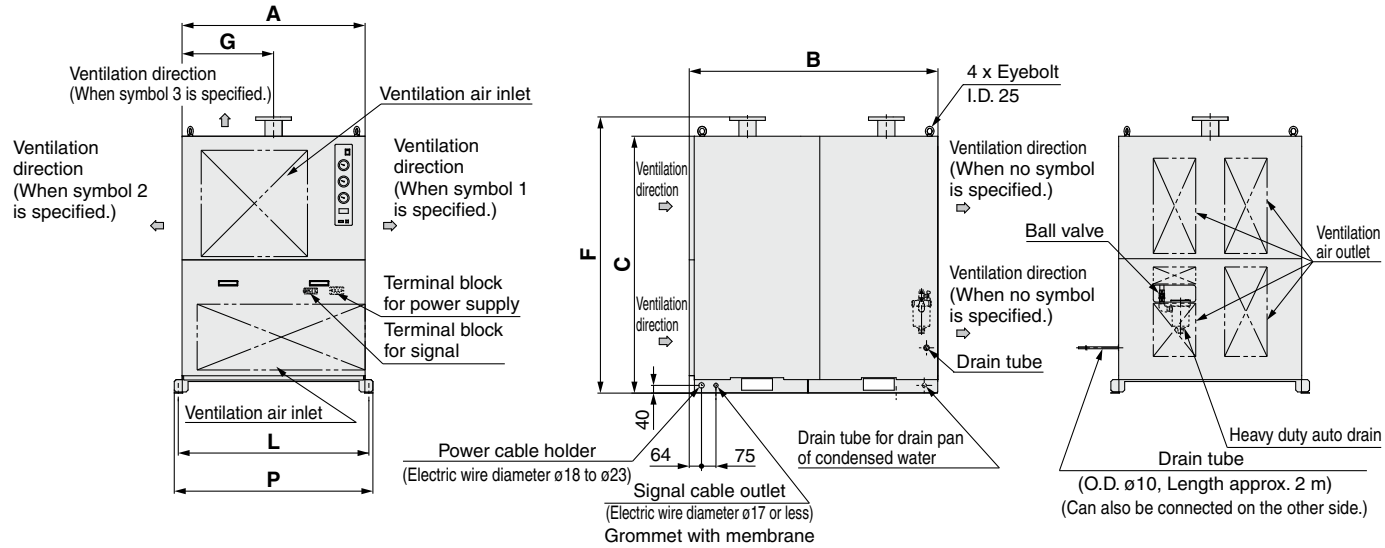

IDF125F-W/150F-W: Water-cooled type

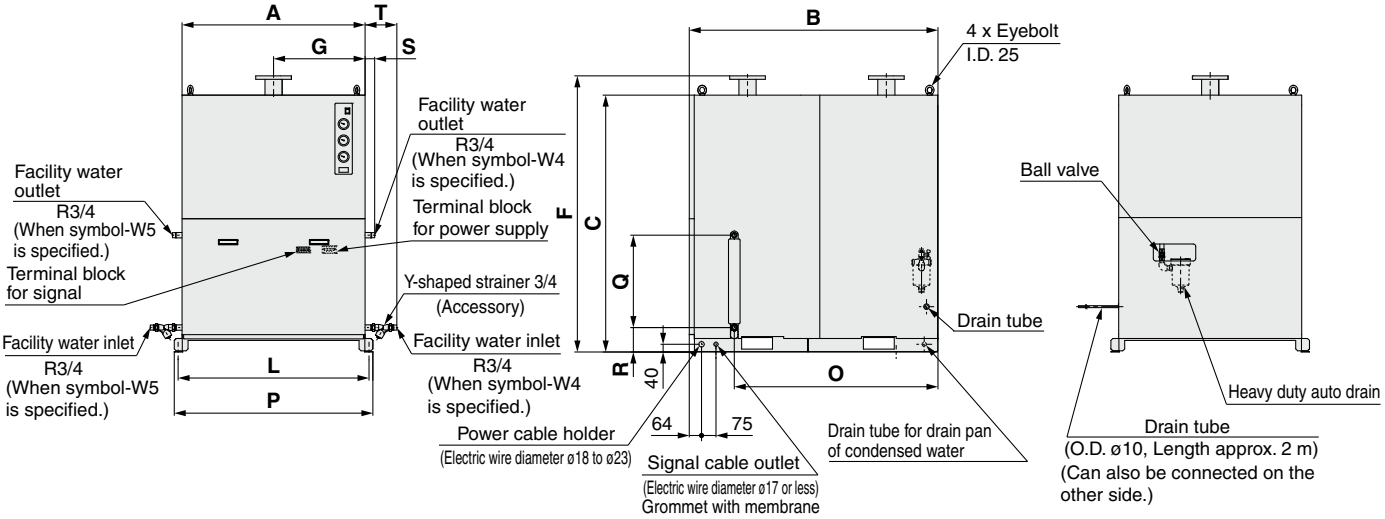

Operating Parts

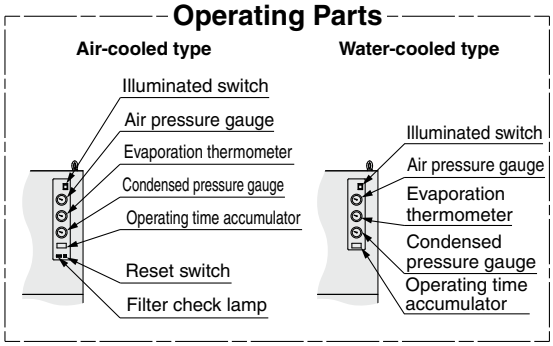

Top view (Air-cooled/Water-cooled)

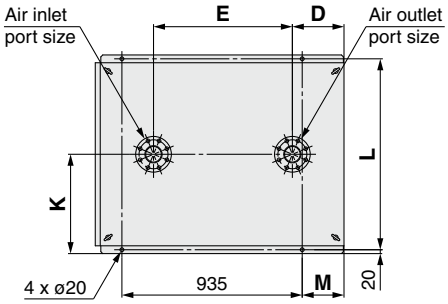

Dimensions

(mm)

Model	Port size	A	B	C	D	E	F	G	K	L	M	O	P	Q	R	S	T
IDF125F	JIS flange 65A 10K	700	1120	1276	267	655	1375	350	376	712	78	—	752	—	—	—	—
IDF125F-W												885		479	127	36	129
IDF150F	JIS flange 80A 10K	950	1290	1332	268	720	1432	475	515	990	217	—	1030	—	—	—	—
IDF150F-W												1056		479	127	50	165

Series IDF100F/125F/150F
Options

Refer to "How to Order" page 2 for optional models.

(Air-cooled type only) (Water-cooled type only)

B D Option symbol

Easy outdoor installation specification

It can be installed outdoors under the eaves of a building, by mounting louvers at the ventilation air inlet and on the side in the heat exhausting direction and drip proof covers over the switch, etc. However, the product should be installed in a location where it will not come into direct contact with rain or snow.

Dimensions for installation under the eaves <Reference>

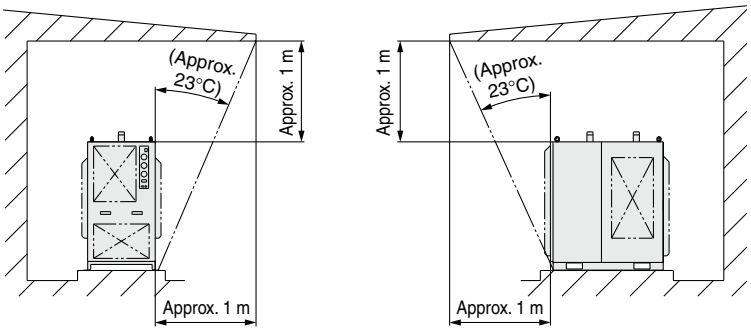

Air-cooled type only

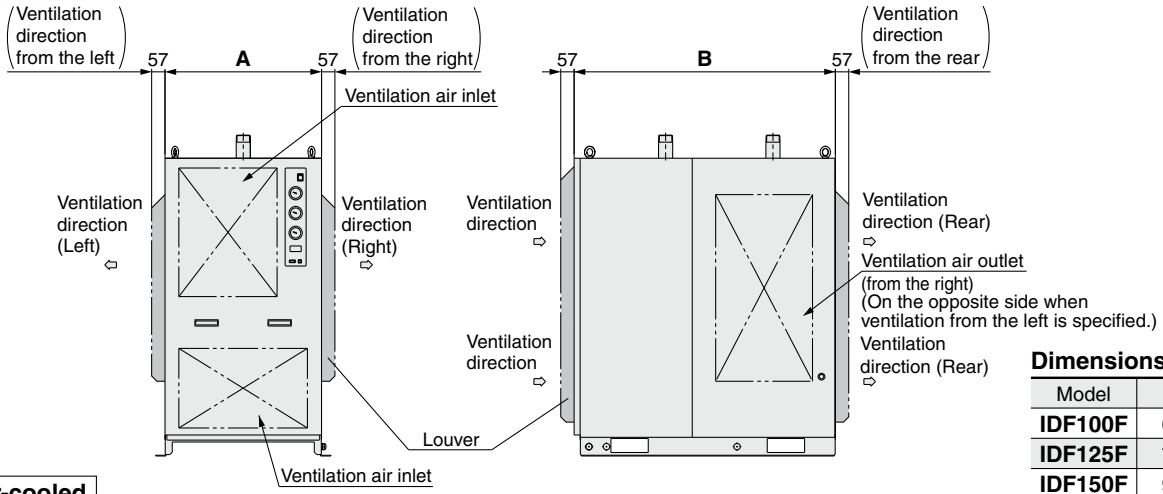

Dimensions

Model	A	B
IDF100F	670	1120
IDF125F	700	1120
IDF150F	950	1290

Water-cooled type only

Same dimensions as the standard specifications

C Option symbol

Anti-corrosive treatment for copper tube

This minimizes the corrosion of the copper and copper alloy parts when the air dryer is used in an atmosphere containing hydrogen sulfide or sulfurous acid gas. (Corrosion cannot be completely prevented.)
Special epoxy coating: Copper tube and copper alloy parts
The coating is not applied on the heat exchanger or around electrical parts, where operation may be affected by the coating.

∗ Corrosion is not covered under warranty.

K Option symbol

Moderate pressure specification

The maximum operating pressure is 1.6 MPa.
The internal drain piping material is changed from nylon to metal.

Specifications

1. Maximum operating pressure: 1.6 MPa
2. Dimensions ··· same as standard products

P Option symbol

With a metal name plate

The label identifying the model and specifications of the product is changed to a metal plate which has better endurance.

R Option symbol

With a circuit breaker

A circuit breaker is installed in the air dryer.
This saves additional electrical wiring at the time of installation.

Air dryer model	IDF100F-30-R IDF125F-30-R IDF150F-30-R	IDF100F-30-RW IDF125F-30-RW IDF150F-30-RW
Breaker capacity	30 A	20 A

Sensitivity current: 30 mA

V Option symbol

With a timer controlled solenoid valve type auto drain

Float type heavy duty auto drain is changed to the solenoid valve type auto drain. Drainage is discharged by controlling a solenoid valve with a timer. A strainer for solenoid valve protection and stop valve are also included.

Replacement Parts

Description	Part no.	Note
Timer type solenoid valve	IDF-S0405	200 VAC

Optional Accessories

Specifications

Description	Features	Specifications
Separately installed power transformer	Power supply and voltage for those other than the standard	Max. ambient temperature 40°C (Relative humidity 85% or less)
Foundation bolt set	For fixing the air dryer to the foundations Easy to secure by striking the axle	Stainless steel
Piping adapter	For converting the thread type of an IN/OUT fitting for air dryers from Rc to NPT	Copper alloy
Panel for changing heat exhausting direction	For changing the heat exhausting direction of the air-cooled type on site. A slit panel and a panel without slit are used in combination.	Refer to the operation manual for details.

Dimensions

[Separately installed power transformer]

IDF-TR7000-8

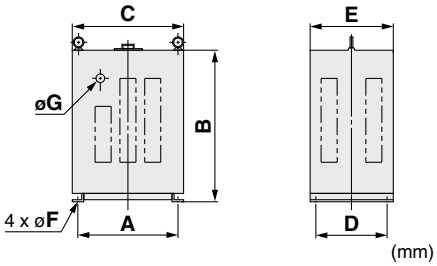

Specifications/Dimensions

Transformer	Applicable dryer	Capacity	Type	Inlet voltage	Outlet voltage	A	B	C	D	E	F	G	Weight
IDF-TR7000-8	IDF100F	7 kVA	Three-phase Compound winding	220, 240 380, 400, 415 440 V (50/60 Hz)	200 V (50/60 Hz)	360	540	400	260	300	11	30	94 kg
IDF-TR9000-8	IDF125F IDF150F	9 kVA				400	650	450	300	350	13	40	109 kg

[Foundation bolt set]

Specifications

Part no.	Applicable dryer	Nominal thread size	Material	Number of 1 set
IDF-AB501	IDF100F to 150F	M10	Stainless steel	4

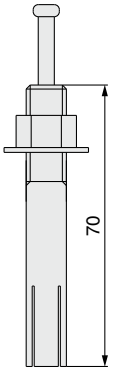

* Use a large flat washer when it is used.

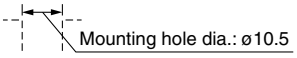

[Piping adapter]

IDF-AP607

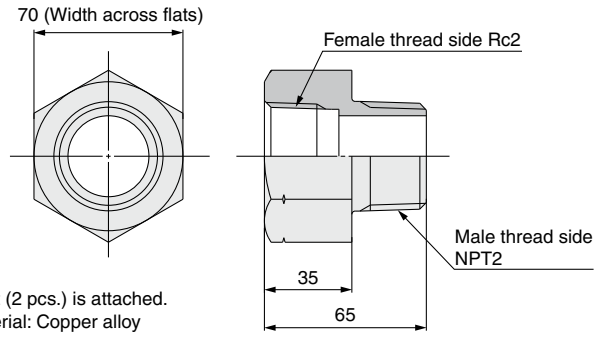

* 1 set (2 pcs.) is attached.
* Material: Copper alloy

Data

Condensed Water Calculation

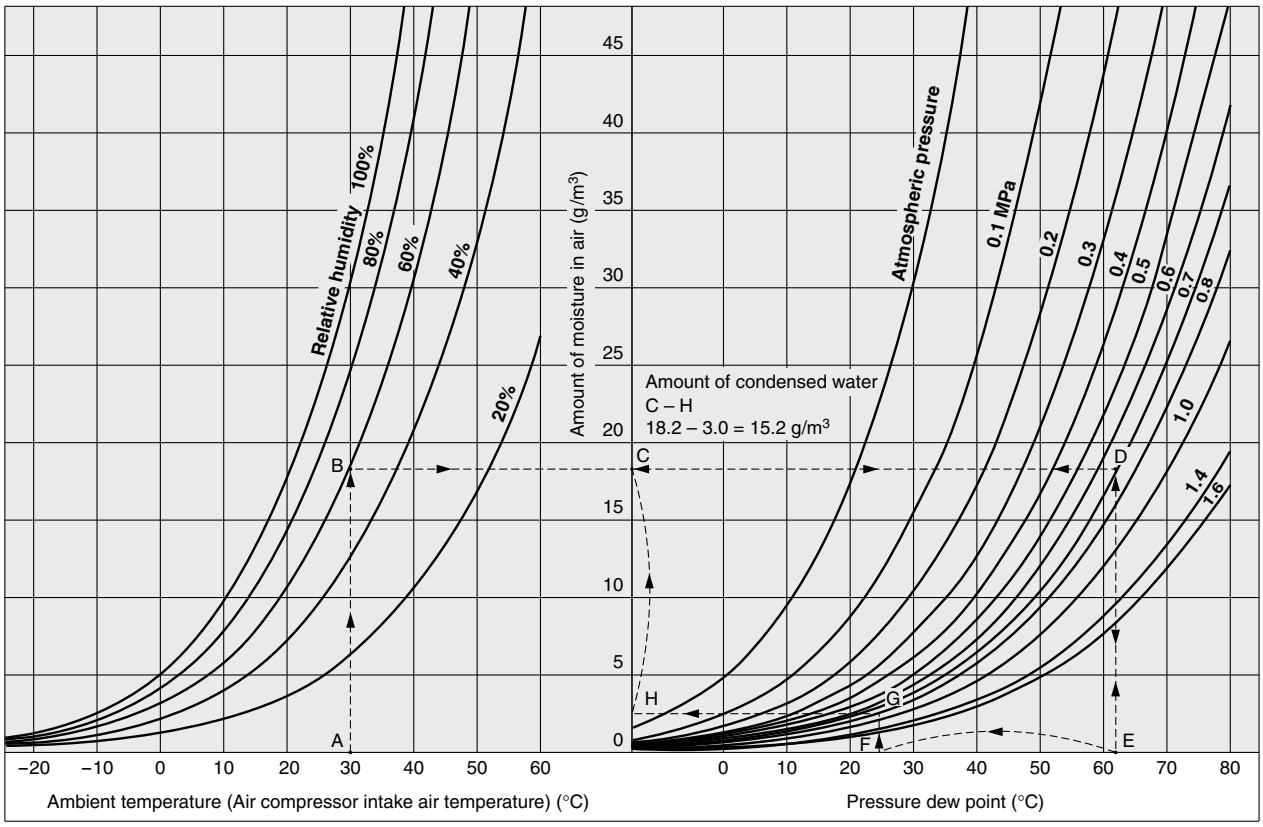

How to calculate the amount of condensed water

Example) To obtain the amount of condensed water when the pressure is applied to air up to 0.7 MPa with an air compressor, then cooled down to 25°C. Given an ambient temperature at 30°C and a relative humidity 60%.

1. Trace the arrow mark from the point A at an ambient temperature 30°C to obtain the intersection B on the curved line for the relative humidity 60%.
2. Trace the arrow mark from the intersection B to obtain the intersection D on the pressure characteristic line for 0.7 MPa.
3. Trace the arrow mark from the intersection D to obtain the intersection E.
4. The intersection E is the dew point under pressure 0.7 MPa with an ambient temperature 30°C and a relative humidity 60%. The value for E is 62°C.
5. Trace the intersection E upward, and trace from the intersection D leftward to obtain the intersection C.
6. The intersection C is the amount of moisture included in the compressed air 1 m³ at 0.7 MPa and a pressure dew point 62°C. **The amount of moisture is 18.2 g/m³.**
7. Trace the arrow mark, starting from F for cooling temperature 25°C (pressure dew point 25°C) to obtain the intersection G on the pressure characteristic line for 0.7 MPa.
8. From the intersection G, trace the arrow mark to obtain the intersection H on the vertical axis.
9. The intersection H is the amount of moisture included in the compressed air 1 m³ at 0.7 MPa, and a pressure dew point 25°C. **The amount of moisture is 3.0 g/m³.**
10. Therefore, the amount of condensed water is as follows (per 1 m³):

The amount of moisture at the intersection C – the amount of moisture at the intersection H = the amount of condensed water
18.2 – 3.0 = 15.2 g/m³

Dew Point Conversion Chart

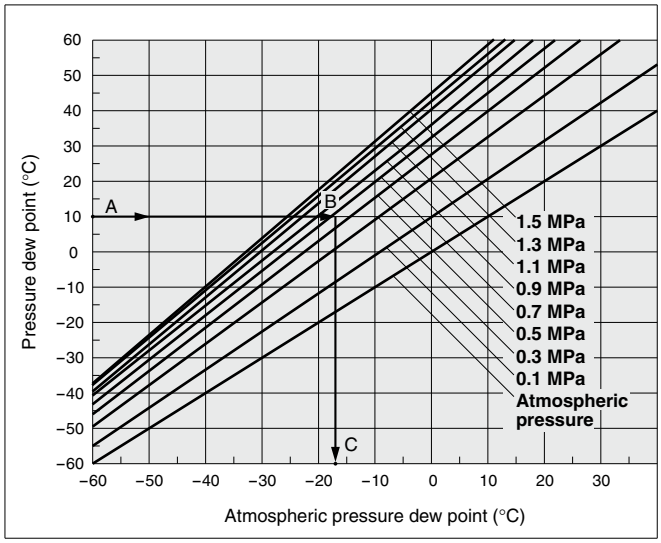

How to read the dew point conversion chart

Example) To obtain the atmospheric pressure dew point at a pressure dew point 10°C and a pressure 0.7 MPa.

1. Trace the arrow mark → starting from the point A at a pressure dew point 10°C to obtain the intersection B on the pressure characteristic line for 0.7 MPa.
2. Trace the arrow mark → starting from the point B to obtain the intersection C at the dew point under atmospheric pressure.
3. The intersection C is the conversion value –17°C under atmospheric pressure dew point.

Series IDF100F/125F/150F
Specific Product Precautions 1

Be sure to read before handling. Refer to back cover for Safety Instructions, "Handling Precautions for SMC Products" (M-E03-3) for Air Preparation Equipment Precautions.

Installation

⚠ Caution

- Avoid locations where the air dryer will be in direct contact with wind and rain. (Avoid locations where relative humidity is 85% or more.)
- Avoid exposure to direct sunlight.
- Avoid locations that contain much dust, corrosive gases, or flammable gases. Failure due to corrosion is not covered under warranty. However, when the risk of corrosion is high, select the option C (anti-corrosive treatment for copper tube).
- Avoid locations of poor ventilation and high temperature.
- Avoid locations where the air dryer is too close to a wall, etc. Leave a sufficient space between the air dryer and the wall according to the "Maintenance Space" in the operation manual.
- Avoid locations where the air dryer could draw in high temperature air discharged from an air compressor or other dryer.

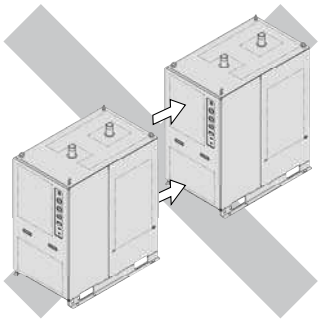

Check that the exhaust air does not flow into the neighboring equipment.

- Avoid locations subjected to vibration.
- Avoid possible locations where the drain can freeze.
- Avoid locations with an ambient temperature over 45°C.
- Avoid installation on machines for transporting, such as vehicles, ships, etc.

Drain Tube

⚠ Caution

- A polyurethane tube is attached as a drain tube for this product. Use this tube to discharge drainage to a drain tank, etc.
- Do not use the drain tube in an upward direction. Do not bend or crush the drain tube. (Operation of the auto drain will stop water vapor from discharging through the air outlet.)
  If it is unavoidable that the tube goes upwards, make sure it only goes as far as the position of the auto drain.

Power Supply

⚠ Caution

<200 VAC>

- Connect the power supply to the terminal block.
- Install a circuit breaker Note) suitable to each model for the power supply.
- Maintain voltage fluctuation within ±10% of the rated voltage.

Note) Select a circuit breaker with a sensitivity current of 30 mA. As regards rated current, refer to "Applicable circuit breaker capacity" on pages 3 and 4.

When the voltage is different from the standard specifications, use a separately installed power transformer. (Page 8)

Air Piping

⚠ Caution

- Be careful to avoid an error in connecting the air piping at the compressed air inlet (IN) and outlet (OUT).
- Install bypass piping since it is needed for maintenance.
- When tightening the inlet/outlet air piping, hold the dryer-side piping firmly in place with a pipe wrench.
- The piping surface may reach temperatures around 60°C depending on usage conditions. When adjusting valves or performing other such operations, a temperature check is necessary, wear gloves before proceeding.
- Check that vibrations resulting from the compressor are not transmitted through the air piping to the air dryer.
- Do not allow the weight of the piping to lie directly on the air dryer.

Protection Circuit

⚠ Caution

When the air dryer is operated in the following cases, which will activate the protection circuit and turn off the lamp, the air dryer will come to stop.

- The compressed air temperature is too high.
- The compressed air flow rate is too high.
- The ambient temperature is too high. (over 45°C)
- The fluctuation of the power supply is beyond the rated voltage ±10%.
- The air dryer is drawing in high temperature air that is exhausted from an air compressor or other dryer.
- The ventilation port is obstructed by a wall or clogged with dust.

Transportation and Installation

⚠ Warning

Be sure to follow the below instructions for transporting the product.

- The product is filled with refrigerant. Transport it (by land, sea or air) in accordance with laws and regulations specified.
- When carrying the product, be careful not to let it drop or fall over. Lift it by using a fork lift or rope and lifting hook. The lifting angle should be 45° or more.
- Do not lift the product by holding the panel, fittings or piping.
- Never lay the product down for transportation. This may lead to damage to the product.

- The product is heavy and has potential dangers in transportation. Be sure to follow the above instructions.
- Be sure to use a fork lift or lifting hook for transporting the product.

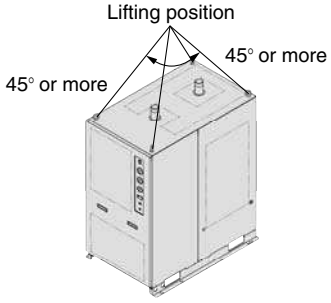

Series IDF100F/125F/150F
Specific Product Precautions 2

Be sure to read before handling. Refer to back cover for Safety Instructions, "Handling Precautions for SMC Products" (M-E03-3) for Air Preparation Equipment Precautions.

Compressor Air Delivery

⚠ Caution

Use an air compressor with an air delivery of 50 L/min or larger.

Since the auto drain is designed in such a way that the valve remains open unless the air pressure rises to 0.05 MPa or higher, air will blow out from the drain outlet at the time of air compressor start up until the pressure increases. Therefore, if an air compressor has a small air delivery, the pressure may not be sufficient.

Auto Drain

⚠ Caution

The auto drain may not function properly, depending on the quality of the compressed air. Check the operation once a day.

Cleaning of Ventilation Area (Air-cooled Type)

⚠ Caution

Remove dust from the ventilation area once a month using a vacuum cleaner or an air blow nozzle. The dustproof filter cleaning indication lamp indicates the timing for cleaning. (It turns on after 300 hours of operation.)

Time Delay for Restarting

⚠ Caution

Allow at least three minutes before restarting the air dryer. Otherwise, the protection circuit will activate, the lamp will be turned off and the air dryer will not start up.

Modifying the Standard Specifications

⚠ Caution

The heat exhausting direction of the air-cooled type can be changed using the "panel for changing heat exhausting direction" which is sold separately. Refer to the operation manual.
The other optional specifications cannot be modified once the product has been supplied to a customer. Check the specifications carefully before selecting an air dryer.

Facility Water Supply (Water-cooled Type)

⚠ Warning

1. Be certain to supply the facility water.

1. Prohibition of water-cut operation, very little flow rate of water operation.
   Do not operate under the condition that there is no facility water or where there is very little flow rate of water is flowing.
   In this kind of operation, facility water temperature may become extremely higher. It is dangerous enough the material of hose may soften and burst when the piping supplying the facility water is connected with hose.
2. Actions to be taken when an emergency stop occurs due to high temperature.
   In case a stop occurs due to extremely high temperature resulting from a decrease in the facility water flow rate, do not immediately flow facility water. It is dangerous enough the material of hose may soften and burst when the piping supplying the facility water is connected with hose.
   First, naturally let it cool down by removing the cause of the flow rate reduction. Secondly, confirm that there is no leakage again.

⚠ Caution

1. Facility water quality

1. Use the facility water within the specified range as shown below. When using with other fluid than facility water, consult with SMC.
2. When it is likely that foreign matter may enter the fluid, install a filter (20 mesh or equivalent).

Facility Water Quality Standard

The Japan Refrigeration and Air Conditioning Industry Association
JRA GL-02-1994 "Cooling water system – Circulation type – Circulating water"

	Item	Unit	Standard value
Standard item	pH (at 25°C)	–	6.5 to 8.2
	Electrical conductivity (25°C)	[μS/cm]	100* to 800*
	Chloride ion (Cl^-)	[mg/L]	200 or less
	Sulfuric acid ion (SO_4^{2-})	[mg/L]	200 or less
	Acid consumption amount (at pH4.8)	[mg/L]	100 or less
	Total hardness	[mg/L]	200 or less
	Calcium hardness ($CaCO_3$)	[mg/L]	150 or less
	Ionic state silica (SiO_2)	[mg/L]	50 or less
Reference item	Iron (Fe)	[mg/L]	1.0 or less
	Copper (Cu)	[mg/L]	0.3 or less
	Sulfide ion (S_2^-)	[mg/L]	Should not be detected.
	Ammonium ion (NH_4^+)	[mg/L]	1.0 or less
	Residual chlorine (Cl)	[mg/L]	0.3 or less
	Free carbon (CO_2)	[mg/L]	4.0 or less

* In the case of [MΩ·cm], it will be 0.00125 to 0.01.

⚠ Safety Instructions

These safety instructions are intended to prevent hazardous situations and/or equipment damage. These instructions indicate the level of potential hazard with the labels of **"Caution," "Warning"** or **"Danger."** They are all important notes for safety and must be followed in addition to International Standards (ISO/IEC)*1), and other safety regulations.

⚠ Caution: **Caution** indicates a hazard with a low level of risk which, if not avoided, could result in minor or moderate injury.

⚠ Warning: **Warning** indicates a hazard with a medium level of risk which, if not avoided, could result in death or serious injury.

⚠ Danger : **Danger** indicates a hazard with a high level of risk which, if not avoided, will result in death or serious injury.

*1) ISO 4414: Pneumatic fluid power – General rules relating to systems.
ISO 4413: Hydraulic fluid power – General rules relating to systems.
IEC 60204-1: Safety of machinery – Electrical equipment of machines. (Part 1: General requirements)
ISO 10218-1: Manipulating industrial robots - Safety.
etc.

⚠ Warning

1. **The compatibility of the product is the responsibility of the person who designs the equipment or decides its specifications.**
   Since the product specified here is used under various operating conditions, its compatibility with specific equipment must be decided by the person who designs the equipment or decides its specifications based on necessary analysis and test results. The expected performance and safety assurance of the equipment will be the responsibility of the person who has determined its compatibility with the product. This person should also continuously review all specifications of the product referring to its latest catalog information, with a view to giving due consideration to any possibility of equipment failure when configuring the equipment.
2. **Only personnel with appropriate training should operate machinery and equipment.**
   The product specified here may become unsafe if handled incorrectly. The assembly, operation and maintenance of machines or equipment including our products must be performed by an operator who is appropriately trained and experienced.
3. **Do not service or attempt to remove product and machinery/equipment until safety is confirmed.**
   1. The inspection and maintenance of machinery/equipment should only be performed after measures to prevent falling or runaway of the driven objects have been confirmed.
   2. When the product is to be removed, confirm that the safety measures as mentioned above are implemented and the power from any appropriate source is cut, and read and understand the specific product precautions of all relevant products carefully.
   3. Before machinery/equipment is restarted, take measures to prevent unexpected operation and malfunction.
4. **Contact SMC beforehand and take special consideration of safety measures if the product is to be used in any of the following conditions.**
   1. Conditions and environments outside of the given specifications, or use outdoors or in a place exposed to direct sunlight.
   2. Installation on equipment in conjunction with atomic energy, railways, air navigation, space, shipping, vehicles, military, medical treatment, combustion and recreation, or equipment in contact with food and beverages, emergency stop circuits, clutch and brake circuits in press applications, safety equipment or other applications unsuitable for the standard specifications described in the product catalog.
   3. An application which could have negative effects on people, property, or animals requiring special safety analysis.
   4. Use in an interlock circuit, which requires the provision of double interlock for possible failure by using a mechanical protective function, and periodical checks to confirm proper operation.

⚠ Caution

1. **The product is provided for use in manufacturing industries.**
   The product herein described is basically provided for peaceful use in manufacturing industries.
   If considering using the product in other industries, consult SMC beforehand and exchange specifications or a contract if necessary.
   If anything is unclear, contact your nearest sales branch.

Limited warranty and Disclaimer/ Compliance Requirements

The product used is subject to the following "Limited warranty and Disclaimer" and "Compliance Requirements".
Read and accept them before using the product.

Limited warranty and Disclaimer

1. The warranty period of the product is 1 year in service or 1.5 years after the product is delivered.*2)
   Also, the product may have specified durability, running distance or replacement parts. Please consult your nearest sales branch.
2. For any failure or damage reported within the warranty period which is clearly our responsibility, a replacement product or necessary parts will be provided.
   This limited warranty applies only to our product independently, and not to any other damage incurred due to the failure of the product.
3. Prior to using SMC products, please read and understand the warranty terms and disclaimers noted in the specified catalog for the particular products.

   ***2) Vacuum pads are excluded from this 1 year warranty.**
   A vacuum pad is a consumable part, so it is warranted for a year after it is delivered.
   Also, even within the warranty period, the wear of a product due to the use of the vacuum pad or failure due to the deterioration of rubber material are not covered by the limited warranty.

Compliance Requirements

1. The use of SMC products with production equipment for the manufacture of weapons of mass destruction (WMD) or any other weapon is strictly prohibited.
2. The exports of SMC products or technology from one country to another are governed by the relevant security laws and regulations of the countries involved in the transaction. Prior to the shipment of a SMC product to another country, assure that all local rules governing that export are known and followed.

Revision history

Edition B	* Addition of Refrigerated Air Dryers IDF125F, 150F.	OX

⚠ Safety Instructions Be sure to read "Handling Precautions for SMC Products" (M-E03-3) before using.

SMC Corporation
Akihabara UDX 15F,
4-14-1, Sotokanda, Chiyoda-ku, Tokyo 101-0021, JAPAN
Phone: 03-5207-8249 Fax: 03-5298-5362
URL http://www.smcworld.com

© 2010 SMC Corporation All Rights Reserved

Specifications are subject to change without prior notice and any obligation on the part of the manufacturer.
D-DN
1st printing OP printing OX 12450SZ Printed in Japan.

Refrigerated Air Dryer

New

RoHS

Double energy saving function series

Second re-heater

Digital scroll compressor

Stainless steel heat exchanger

Ozone depletion potential ZERO refrigerant

Saves energy by up to 76% by using second re-heater and digital scroll compressor!!

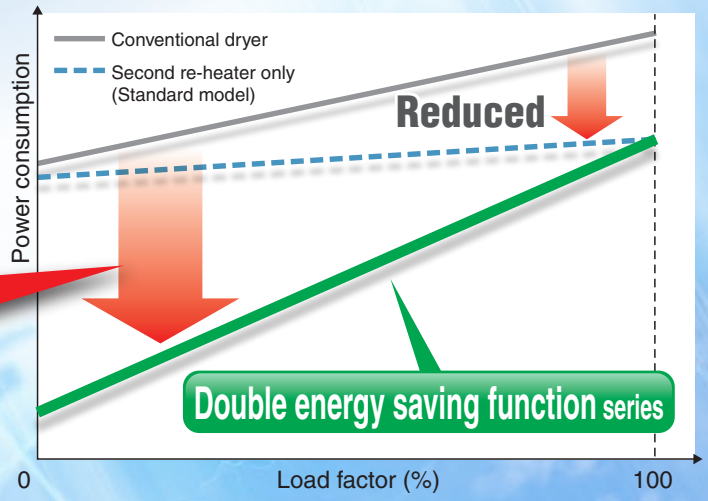

Energy saving design

By up to 76 (1 kW)*1 % reduced Power consumption

*1.Operating conditions: The IDF125FS operated in the energy saving operation mode
●Ambient temperature 32°C ●Inlet air temperature 40°C
●Inlet air pressure 0.7 MPa ●Air flow rate = Rated flow x 0.4
●Power supply frequency 60 Hz ●Power supply voltage 200 V ●Set dew point = 30°C

By up to 25*2 % reduced Exhaust heat

*2.Under the rated conditions

Tolerant of high temperature environment!

- Ambient temperature : Up to 45°C
- Inlet air temperature : Up to 60°C

ECO switch

Optimal operation by switching between the energy saving operation mode and the normal operation mode depending on the season and operating environment

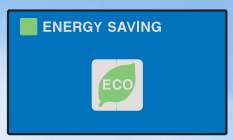

* Refer to the page “Features 4” for details.

Applicable air compressor	100kW/125kW/150kW

Series IDF100FS/125FS/150FS

SMC

CAT.ES30-16A

Energy saving effects of the double energy

Energy saving design

Second re-heater — Second re-heater

Digital scroll compressor — Digital scroll compressor

Double energy saving function series reduces power consumption by up to 76%!

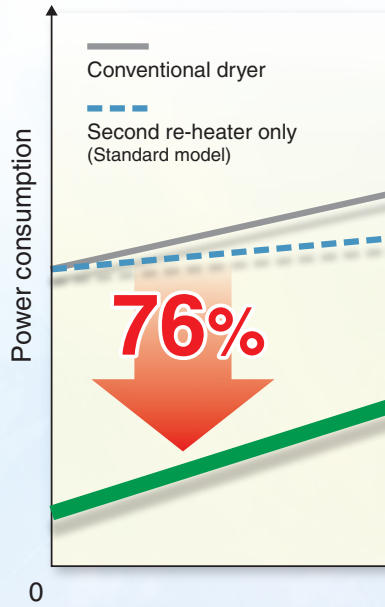

Operating conditions: The IDF125FS operated in the energy saving operation mode

●Ambient temperature 32°C ●Inlet air temperature 40°C ●Inlet air pressure 0.7 MPa ●Air flow rate = Rated flow x 0.4 ●Power supply frequency 60 Hz ●Power supply voltage 200 V ●Set dew point = 30°C

Second re-heater — Energy saving effect of the second re-heater

Exhaust heat from dryer

By up to **25% reduced** (SMC comparison)

Condition: The IDF100F is operated with the rated condition of 60 Hz.

Effective for downsizing and energy saving operation of the air conditioner!

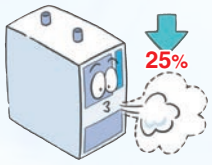

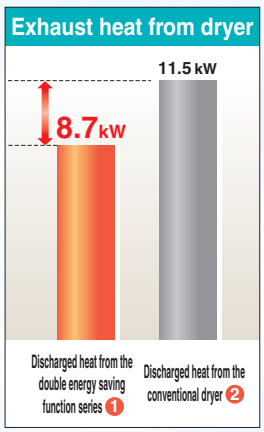

Ambient temperature 45°C

Second re-heater helps heat discharge from the condenser!

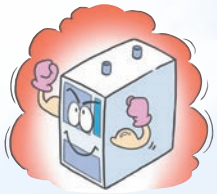

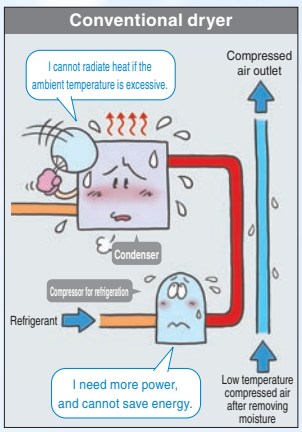

Suppresses ambient temperature increase

Second re-heater reduces heat discharge from the dryer **by up to 25%** (SMC comparison) by reducing the load to the condenser, and this suppresses ambient temperature increase.

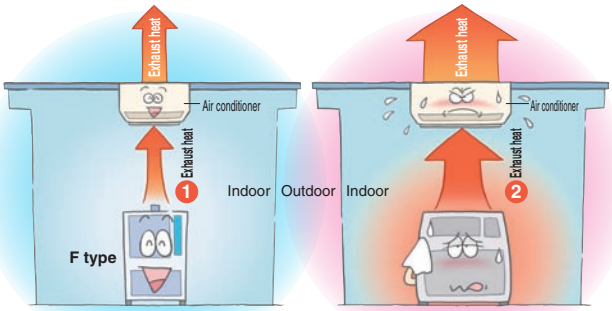

Double energy saving function series (With second re-heater) | Conventional dryer (Without second re-heater)

Double energy saving function series

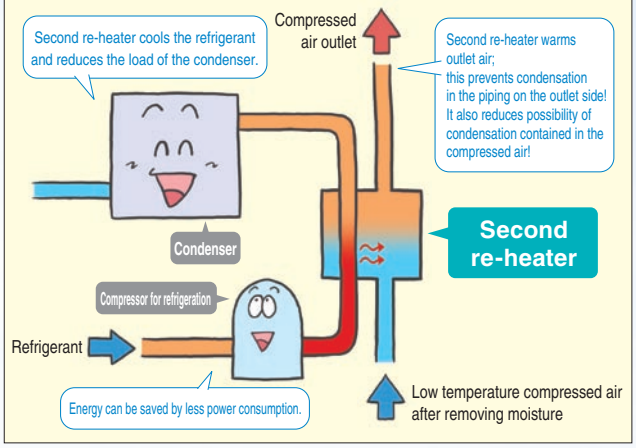

saving function series

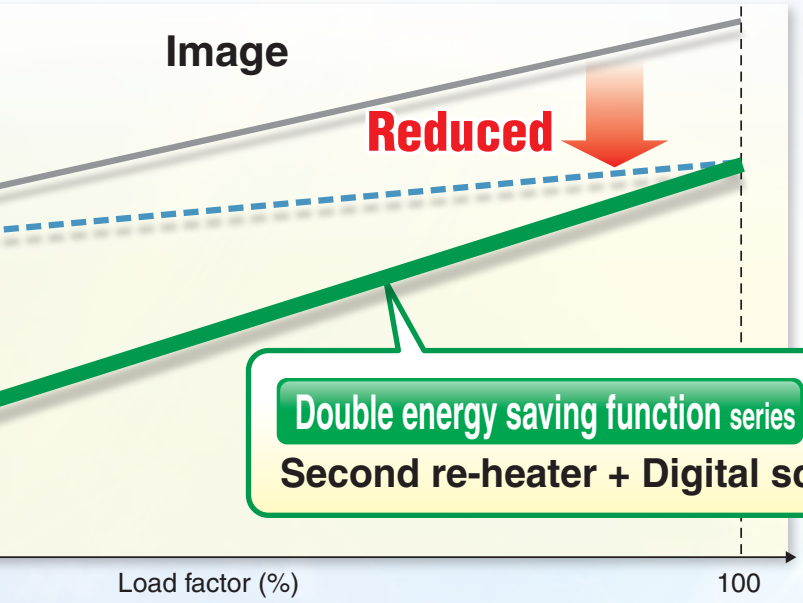

Double energy saving function series

Second re-heater + Digital scroll compressor

Load factor Operating conditions that increase load factor: ●High inlet air temperature and ambient temperature ●A large amount of air to be processed ●Low inlet air pressure

Digital scroll compressor — Difference in the energy saving efficiency between different kinds of compressors

Double energy saving function series

controls the compressor output depending on the load factor.

Reduces power consumption of the dryer!

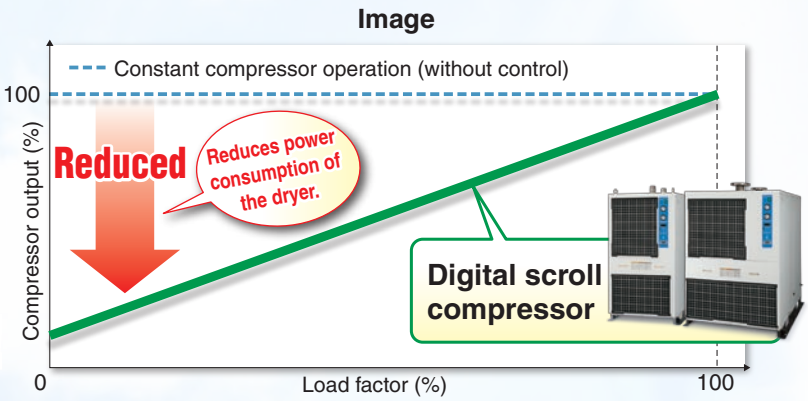

Load factor Operating conditions that increase load factor: ●High inlet air temperature and ambient temperature ●A large amount of air to be processed ●Low inlet air pressure

Output control method of the compressor (with load factor 50%)

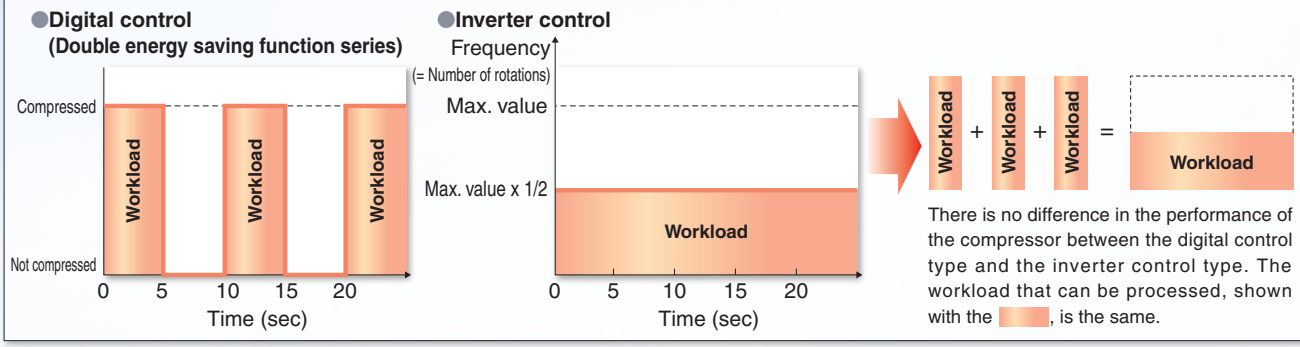

There is no difference in the performance of the compressor between the digital control type and the inverter control type. The workload that can be processed, shown with the ▭, is the same.

Digital control **Digital scroll compressor**, which has the unloading function, controls the compressor output depending on the load by repeating compression and nocompression as shown in the figure above. By automatically changing the compression/nocompression time, it is possible to change the dehumidification capacity (cooling capacity) of the dryer.

Effect example 1 year (Spring to Winter) Power consumption Reduced

Compared with the standard model (constant compressor operation),

double energy saving function series

reduces power consumption by 43%!! Note)

Note) The IDF125FS is used for this example.

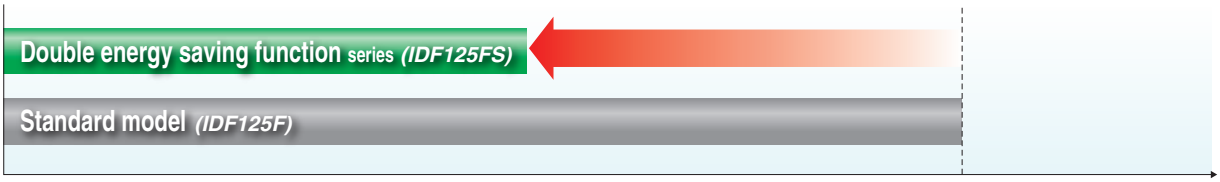

Note) **[Trial calculation conditions]** Days of operation per year = 240 days (60 days each in spring, summer, autumn and winter), Operation hours per day = 12 hours, Operating conditions = Refer to the conditions shown below.

Power consumption of the standard model under the same conditions

Winter 2°C

Double energy saving function series — **71% reduced** — Normal operation mode

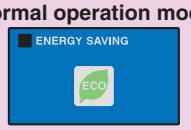

Conditions • Ambient temperature: 2°C • Inlet air temperature: 10°C • Set dew point*: 10°C

Summer 40°C

Double energy saving function series — **38% reduced** — Energy saving operation mode

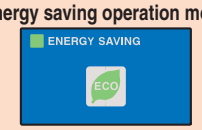

Conditions • Ambient temperature: 40°C • Inlet air temperature: 50°C • Set dew point*: 30°C

⚠ Refer to page 3 for dew point change.

Spring/Autumn 15°C

Double energy saving function series — **30% reduced** — Normal operation mode

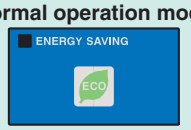

Conditions • Ambient temperature: 15°C • Inlet air temperature: 25°C • Set dew point*: 10°C

Power consumption

Common conditions • Air flow rate = Rated flow • Inlet air pressure: 0.5 MPa • Power supply frequency: 60 Hz • Power supply voltage: 200 V

* Dew point can be set for the double energy saving function series only. The dew point setting function is not equipped with the standard model.

Convenient functions

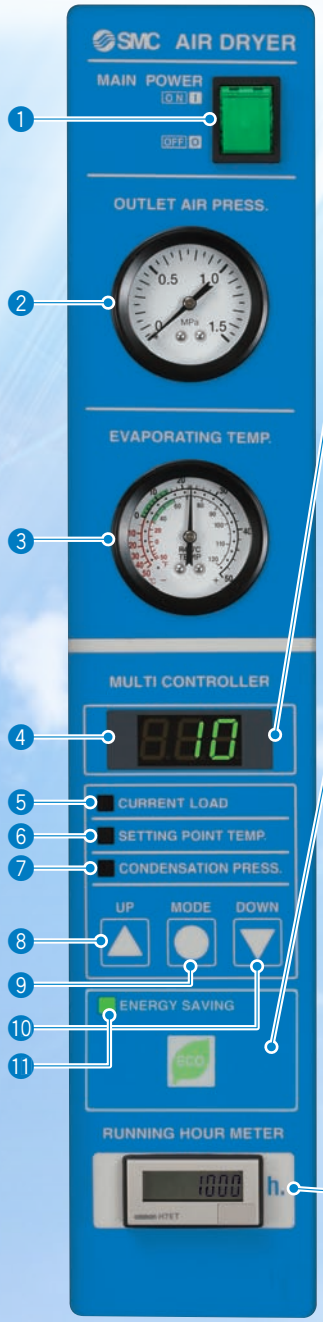

Clear digital display
(This displays the operation factor (dryer output) as an example.)

Easy-to-see LED even in a dark place
Fault diagnosis with alarm codes

Example **E02** Fan motor failure

Alarm code	Alarm name	Operation	Main cause
E00	Abnormal phase	Stop	Phase sequence reversal or open phase
E01	Thermal trip	Stop	Clogging of the dust filter, overload, or compressor failure
E02	Fan motor failure	Stop	Fan motor failure
E03	Compression pressure failure	Stop	Clogging of the dust filter or overload
e00	Compression pressure warning	Continue	Clogging of the dust filter or overload

ECO switch

Operation mode can be set either in the energy saving operation mode *1 or normal operation mode *2 by using the ECO (economical mode) switch. In the energy saving operation mode, changing the set dew point can save more energy.

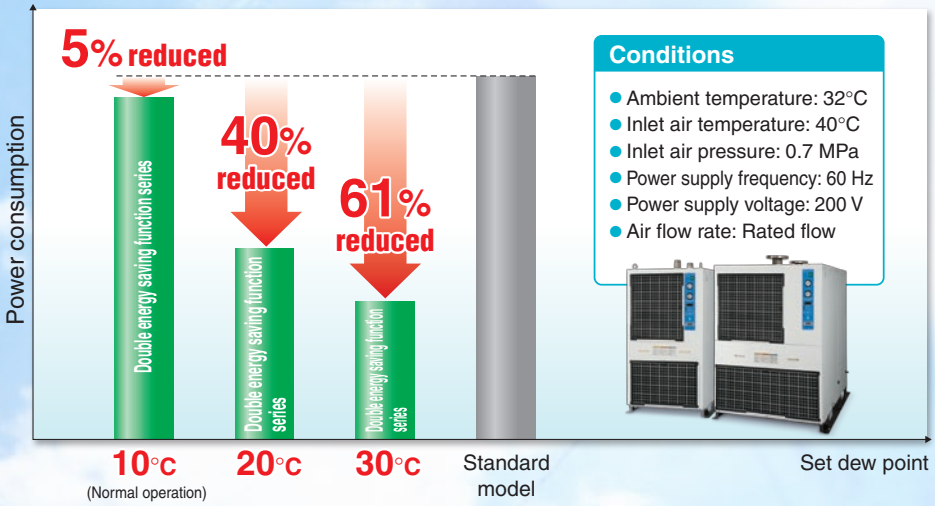

Accumulated running hours display

Helps maintenance control of the dryer.
Gives notice of the maintenance timing etc.

*1. Energy saving operation (ECO LED is ON green): Dew point can be set manually between 10 to 30°C.
*2. Normal operation (ECO LED is OFF): Dew point is fixed to 10°C.

No.	Description	Function
1	Illuminated switch	Operate or stop the dryer. Green LED turns ON during operation.
2	Air pressure gauge	Displays air pressure inside the heat exchanger.
3	Evaporation thermometer	Displays evaporating temperature of refrigerant.
4	Multi-display	Displays operation factor (output) of the dryer, set dew point, condensation pressure, or alarm code.
5	Operation factor LED	The dryer output is displayed on the multi-display while this LED is ON.
6	Set dew point LED	The set dew point is displayed on the multi-display while this LED is ON.
7	Condensation pressure LED	The condensation pressure of the refrigerant is displayed on the multi-display while this LED is ON.
8	UP key	Increase the set dew point.
9	MODE key	Pressing this key changes the display on the multi-display in sequence from operation factor, set dew point, condensation pressure, and back to operation factor.
10	DOWN key	Decrease the set dew point.
11	ECO LED	Operate in the energy saving mode while this LED is ON green.

Maintenance

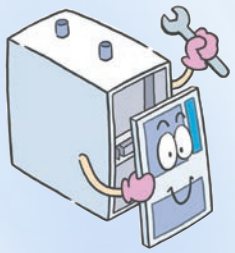

- Reduces maintenance hours by using a stainless steel heat exchanger with higher corrosion resistance.
- Dustproof filter
- Only access from front side is required to check electrical equipment and dustproof filter.

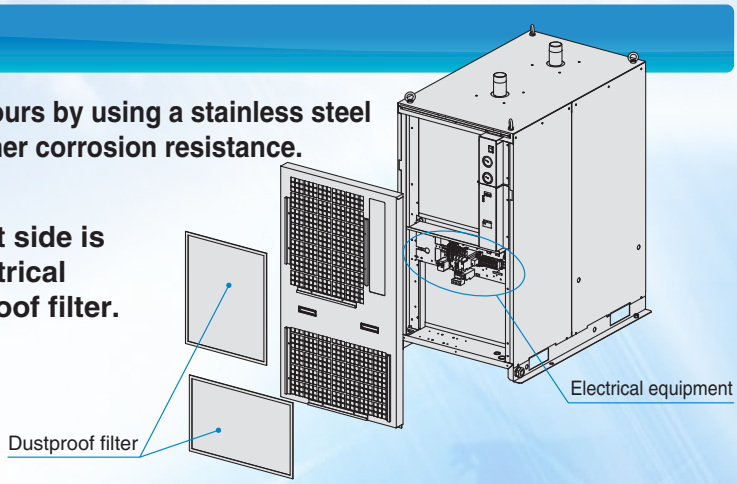

Selection of layout

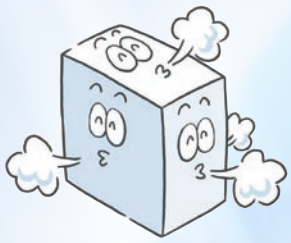

- Exhausting direction can be selected from four directions!!
- Auto drain tube can be connected in two directions, left or right.

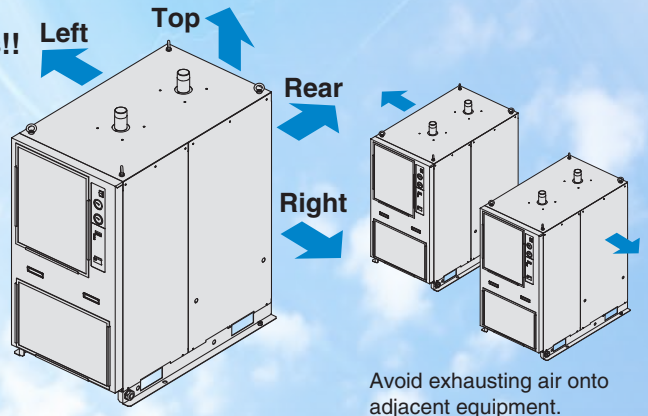

Avoid exhausting air onto adjacent equipment.

Space saving

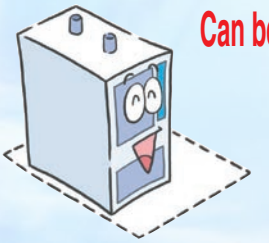

Installation space reduced by up to 1.5 m²

Can be installed flat against a wall*1!

*1: One side only (either left or right)

- Exhausting direction can be selected from four directions!! (Rear, right, left, and top)
- Main maintenance can be performed on the front and rear sides.

Leave at least 600 mm on the sides indicated with ⟷.

Note) Leave a space of at least 600 mm between the heat exhausting face and the wall.

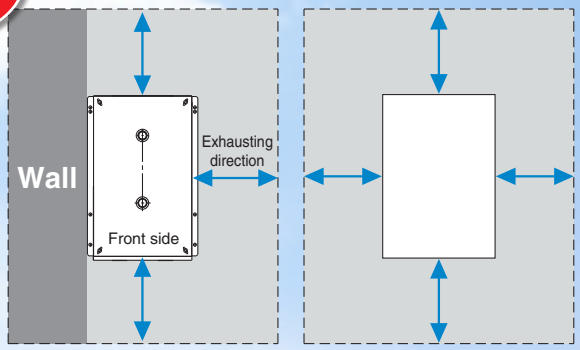

Installation space of the IDF100FS (Example of heat exhausting direction from right side)

Installation space of the conventional type

Air Dryer Variations

Series IDF□E/F/D

Standard inlet air temperature type Rated inlet air temperature: 35, 40°C

[Max. inlet air temperature: 50°C, 60°C (F and FS type only)]

Refer to SMC website for details.

	Model	Air flow capacity (m³/min [ANR]) 50 Hz	Air flow capacity (m³/min [ANR]) 60 Hz	Applicable air compressor (kW) Note)	Power supply voltage (Frequency)	Port size
	IDF1E	0.1	0.12	0.75	Single-phase 100 VAC (50 Hz) Single-phase 100/110 VAC (60 Hz)	Rc3/8
	IDF2E	0.2	0.235	1.5		
	IDF3E	0.32	0.37	2.2	Single-phase 100/200 VAC (50 Hz) Single-phase 100/110 VAC, 200/220 VAC (60 Hz)	
	IDF4E	0.52	0.57	3.7		Rc1/2
	IDF6E	0.75	0.82	5.5		Rc3/4
	IDF8E	1.22	1.32	7.5		
	IDF11E	1.65	1.82	11		
	IDF15E1	2.8	3.1	15		Rc1
	IDF22E	3.9	4.3	22	Single-phase/Three-phase 200 VAC (50 Hz) Single-phase/Three-phase 200/220 VAC (60 Hz)	R1
	IDF37E	5.7	6.1	37		R1 1/2
	IDF55E	8.4	9.8	55	Three-phase 200 VAC (50 Hz) Three-phase 200/220 VAC (60 Hz)	R2
	IDF75E	11.0	12.4	75		
Large size series	IDF100F	16.0	18.8	100		
Large size series	IDF125F	20.1	23.7	125		65 (2 1/2B) flange
Large size series	IDF150F	25.0	30.0	150		80 (3B) flange
Large size series	IDF190D	32.0	38.0	190		
Large size series	IDF240D	43.0	50.0	240		100 (4B) flange
Large size series	IDF370D	54.0	65.0	370		150 (6B) flange
Double energy saving function series	IDF100FS	16.0	18.8	100		R2
Double energy saving function series	IDF125FS	20.1	23.7	125		65 (2 1/2B) flange
Double energy saving function series	IDF150FS	25.0	27.0	150		80 (3B) flange

Note) Note that the above value is for reference only. Check the actual compressor capacity.

∗ Refer to the separate catalog. (IDF1E to 370D)

Series IDU

High inlet air temperature type Rated inlet air temperature: 55°C

[Max. inlet air temperature: 80°C]

Refer to SMC website for details.

Model	Air flow capacity (m³/min [ANR]) 50 Hz	Air flow capacity (m³/min [ANR]) 60 Hz	Applicable air compressor (kW) Note)	Power supply voltage (Frequency)	Port size
IDU3E	0.32	0.37	2.2	Single-phase 100/200 VAC, 230 VAC (50 Hz) Single-phase 100/110 VAC, 200/220 VAC (60 Hz)	Rc3/8
IDU4E	0.52	0.57	3.7		Rc1/2
IDU6E	0.75	0.82	5.5		Rc3/4
IDU8E	1.1	1.2	7.5		
IDU11E	1.5	1.7	11		
IDU15E1	2.6	2.8	15		Rc1
IDU22E	3.9	4.3	22	Single-phase 230 V (50 Hz) Three-phase 200 V (50 Hz) Three-phase 200/220 V (60 Hz)	R1
IDU37E	5.7	6.1	37		R1 1/2
IDU55E	8.4	9.8	55		R2
IDU75E	11.0	12.5	75		

Note) Note that the above value is for reference only. Check the actual compressor capacity.

∗ Refer to the separate catalog.

Series IDF100FS/125FS/150FS
Model Selection

The corrected air flow capacity, which considers the user's operating conditions, is required for selecting air dryer. Select using the following procedures.

1 Read the correction factors.

Obtain the correction factors Ⓐ to Ⓓ suitable for your operating condition from the table on the next page.

IDF100FS/125FS/150FS Selection Example

Conditions		Data symbol	Correction factor Note)
Inlet air temperature	45°C	Ⓐ	0.92
Ambient temperature	40°C	Ⓑ	0.98
Outlet air pressure dew point	10°C	Ⓒ	1
Inlet air pressure	0.5 MPa	Ⓓ	0.93
Air flow rate	12 m³/min	—	—
Power supply frequency	50 Hz	—	—

Note) Values obtained from "Correction Factors" below.

2 Check the coefficient.

Correction factor = 0.92 x 0.98 x 1 x 0.93 = 0.84
Max. coefficient value is 1.5. Correction factor is 1.5 when the calculation result is 1.5 or greater.

3 Calculate the corrected air flow capacity.

Obtain the corrected air flow capacity from the following formula.
Corrected air flow capacity = Air flow rate ÷ (Correction factor Ⓐ x Ⓑ x Ⓒ x Ⓓ)

Corrected air flow capacity = 12 m³/min ÷ (0.92 x 0.98 x 1 x 0.93)
= 14.3 m³/min

4 Select the model.

Select the model with air flow capacity which exceeds the corrected air flow capacity from the specification table. (For air flow capacity, refer to the Data Ⓔ below.)

According to the corrected air flow capacity of 14.3 m³/min, the IDF100FS will be selected which air flow capacity is 16 m³/min at 50 Hz.

5 Options

Refer to page 9.

6 Finalize the model number.

Refer to page 2.

7 Select the optional accessories.

Refer to page 10.

Correction Factors

Data Ⓐ: Inlet Air Temperature

Inlet air temp. (°C)	Correction factor
5 to 30	1.41
35	1.21
40	1
45	0.92
50	0.75
55	0.63
60	0.53

Data Ⓑ: Ambient Temperature

Ambient temp. (°C)	Correction factor
2 to 25	1.06
30	1.02
32	1
35	0.99
40	0.98
45	0.92

Data Ⓒ: Outlet Air Pressure Dew Point

Outlet air pressure dew point (°C)	Correction factor
10	1
15	1.4
16 or more	1.5 *

* The maximum coefficient value is 1.5 due to the drainage separation performance.

Data Ⓓ: Inlet Air Pressure

Inlet air pressure (MPa)	Correction factor
0.2	0.84
0.3	0.87
0.4	0.9
0.5	0.93
0.6	0.96
0.7	1
0.8	1.03
0.9	1.06
1 to 1.6	1.09

Data Ⓔ: Air Flow Capacity

Model		IDF100FS	IDF125FS	IDF150FS
Air flow capacity m³/min (ANR)	50 Hz	16	20.1	25
	60 Hz	18.8	23.7	27

Refrigerant R407C (HFC)

Series IDF100FS/125FS/150FS

Applicable Compressor Size: 100 kW, 125 kW, 150 kW

(Max. inlet air temperature: 60°C, Max. ambient temperature: 45°C)

RoHS

How to Order

IDF 100 FS – 30 –

Nil
C
K
P
R
V

Nil
1
2
3

Size

Size	Air compressor size Note)
100	100 kW
125	125 kW
150	150 kW

Note) Note that the above values are for reference only. Check the actual compressor capacity.

Voltage

Symbol	Voltage
30	Three-phase 200 VAC (50 Hz) 200/220 VAC (60 Hz)

Heat exhausting direction

Symbol	Description
Nil	Heat exhaust from the rear
1	Heat exhaust from the right Note)
2	Heat exhaust from the left Note)
3	Heat exhaust from the top Note)

Note) The combination of 1, 2 and 3 is not available. (Heat exhausting face can be specified on one side only.)

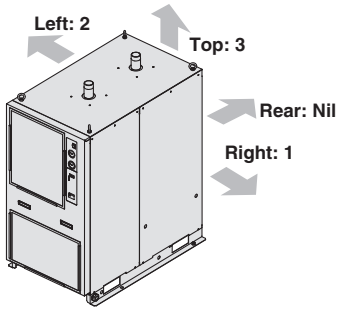

Options

Symbol Note)	Description
Nil	None
C	Anti-corrosive treatment for copper tube
K	Moderate pressure specification
P	With a metal name plate
R	With an earth leakage breaker
V	With a timer controlled solenoid valve type auto drain

Note) Enter alphabetically when multiple options are combined.

Standard Specifications

Item			Model	IDF100FS-30	IDF125FS-30	IDF150FS-30
Operating range Note 1)	Fluid			Compressed air		
	Inlet air temperature (°C)			5 to 60		
	Inlet air pressure (MPa)			0.15 to 1.0/0.15 to 1.6 (Option K)		
	Ambient temperature (humidity) (°C)			2 to 45 (Relative humidity 85% or less)		
Outlet air pressure dew point set range Note 2) Note 3) (°C)				10 to 30		
Rated conditions	Air flow capacity (m^3/min)	Standard condition (ANR) Note 4)	50 Hz	16	20.1	25
			60 Hz	18.8	23.7	27
		Compressor intake condition Note 5)	50 Hz	16.7	20.9	26
			60 Hz	19.6	24.7	28.1
	Inlet air pressure (MPa)			0.7		
	Inlet air temperature (°C)			40		
	Ambient temperature (°C)			32		
	Outlet air pressure dew point Note 6) (°C)			10		
	Exhaust heat from condenser (50/60 Hz) (kW)			7.5/8.7	9.2/10.8	10.4/12.4
Electric specifications	Power supply voltage (Frequency) Note 7)			Three-phase 200 VAC (50 Hz)/200, 220 VAC (60 Hz)		
	Power consumption (50/60 Hz) Note 8) (kW)			2.8/3.3	3.8/4.5	3.8/4.5
	Operating current (50/60 Hz) Note 8) (A)			8.9/9.9	13.0/14.5	13.0/14.5
Applicable earth leakage breaker capacity Note 9) (A)				20	30	
Condenser				Air-cooled		
Refrigerant				R407C (HFC)		
Auto drain				Heavy duty auto drain (Normally open)		
Port size				R2	JIS flange 65A 10K	JIS flange 80A 10K
Weight (kg)				228	255	340
Coating color				Body panel: White 1 Base: Gray 2		
Applicable air compressor output (Reference) For screw type (kW)				100	125	150

Note 1) The operation range does not guarantee the use with normal air flow capacity. When operating conditions are different from the rated specifications, please select a model in accordance with Model Selection on page 1.
Note 2) This function is used to reduce the energy consumption of the dryer operation by changing the outlet air pressure dew point depending on the season and operating environment.
As this is not a function for the purpose of setting the dew point of the outlet air pressure to the required dew point, SMC does not warrant the offset and stability of the dew point of the outlet air pressure.
Note 3) It is not possible to set the dew point of the outlet air pressure higher than the dew point of the inlet air pressure. (This dryer does not have a humidifying function.) When the load (e.g. air flow rate, inlet air temperature) is small, dew point of the outlet air pressure may be lower than the set dew point. When the load is large, dew point of the outlet air pressure may not decrease to the set dew point.
Note 4) Air flow capacity under the standard condition (ANR) [at 20°C, atmospheric pressure, relative humidity 65%]
Note 5) Air flow capacity converted by the compressor intake condition [at 32°C, atmospheric pressure]
Note 6) Dew point of the outlet air pressure shown in this table is the value that is obtained when the air flow rate, inlet air temperature, inlet air pressure and ambient temperature are stable. The stated dew point of the outlet air pressure may not be obtained in an unstable condition, such as soon after compressed air is supplied.
Note 7) The voltage fluctuation should be maintained within ±10% of the rated voltage.
Note 8) Value with the power supply voltage 200 V
Note 9) Install an earth leakage breaker with a sensitivity 30 mA.

Replacement Parts

Air dryer model	IDF100FS	IDF125FS	IDF150FS
Heavy duty auto drain replacement part no. Note 10)	ADH-E400		
Dustproof filter set for condenser	IDF-FL219		IDF-FL220

Note 10) Part number of only the exhaust mechanism replacement kit excluding the housing

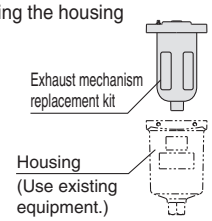

Symbol

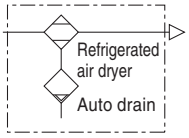

⚠Outlet air pressure dew point set range

When setting the dew point of outlet air pressure, it should be set to a lower temperature than the ambient temperature of the downstream piping of the dryer. If the dew point is set at a higher temperature than the ambient temperature, the dehumidified compressed air at the outlet of the dryer will be cooled down, and moisture in the compressed air condenses, resulting in a failure of the pneumatic equipment on the downstream side of the dryer or splashing of the condensation over the workpieces.
When there is a possibility of such risks due to ambient temperature change etc., a compact dryer or filter for removing water droplets should be installed.

When changing the set dew point, the following points should be noted.
- Temperature change due to season change
- Outside temperature between compressor room and facility
- Manufacturing site that is locally cooled

⚠Product specifications

Please refer to the "Product Specifications" that is available separately for utility. Please contact SMC sales representative for the "Product Specifications".

Construction (Air/Refrigerant Circuit)

Hot and humid air entering the air dryer is cooled down by the cooler re-heater (heat exchanger). The moisture which is condensed and separated is automatically exhausted by the auto drain. The air which has had its moisture removed is heated in two stages by the re-heater (heat exchanger) in the cooler re-heater and by the second re-heater, and is supplied to the outlet side as warm and dry air.

IDF100FS/125FS/150FS

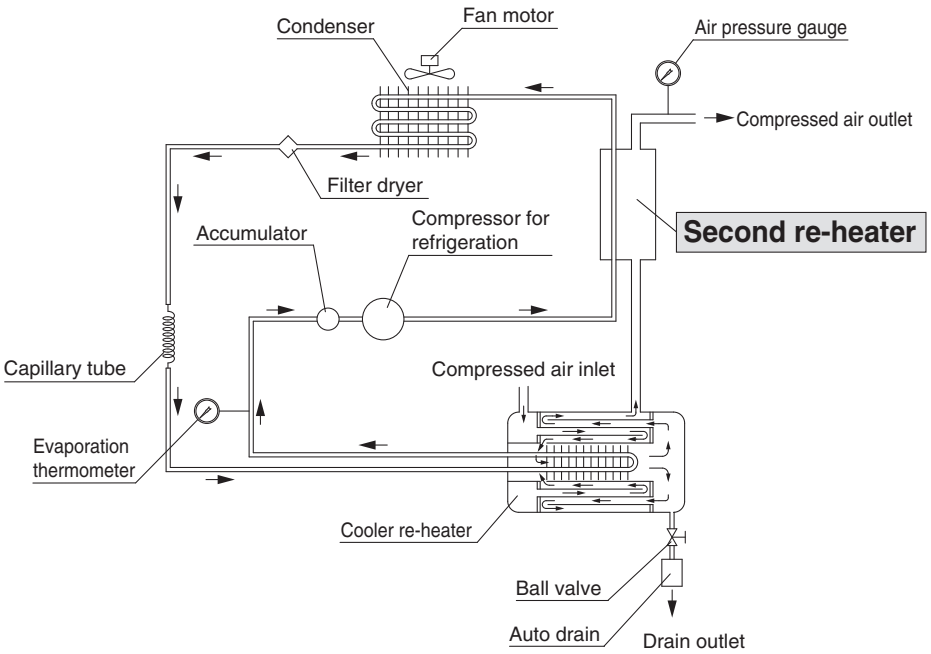

Second re-heater

Compressed air from which drainage has been exhausted exchanges heat with refrigerant which has been compressed by the refrigerator, to give the following effects:

1. The outlet air temperature increases, preventing condensation of the piping on the outlet side.
2. The amount of heat exhausted from the condenser is reduced.
3. Energy saving operation of the dryer is achieved by reducing the amount of heat exhausted from the condenser.

Dimensions

IDF100FS

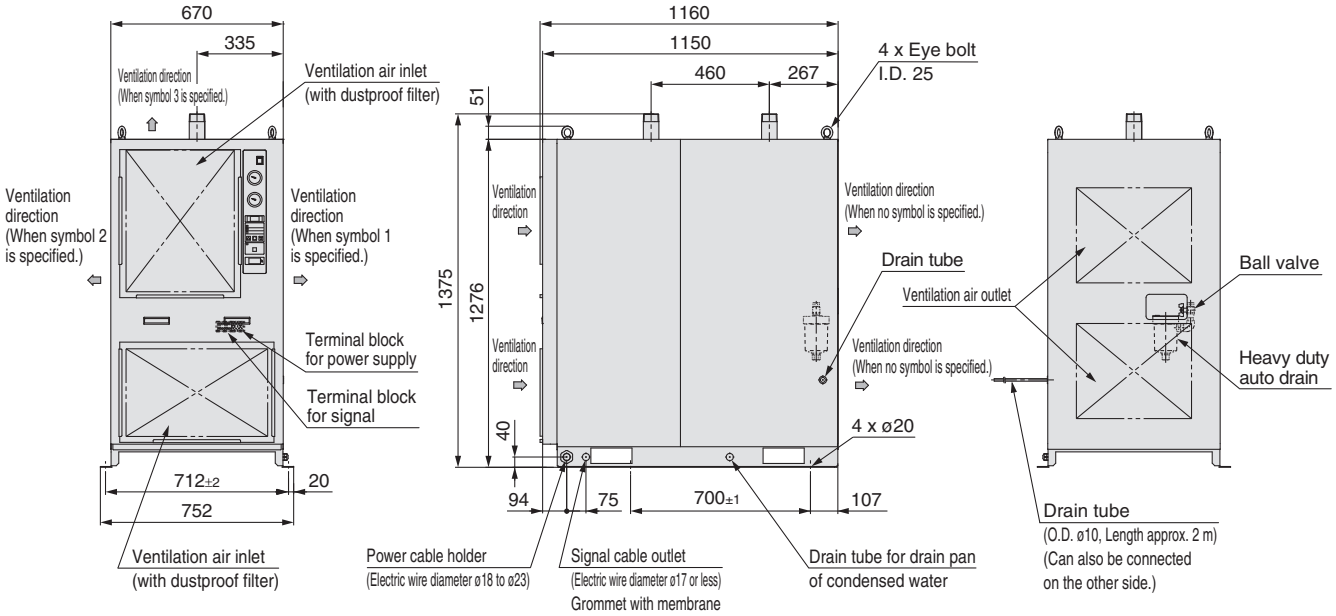

Top view

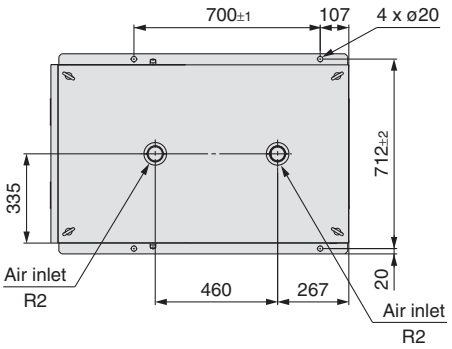

Dimensions

IDF125FS/150FS

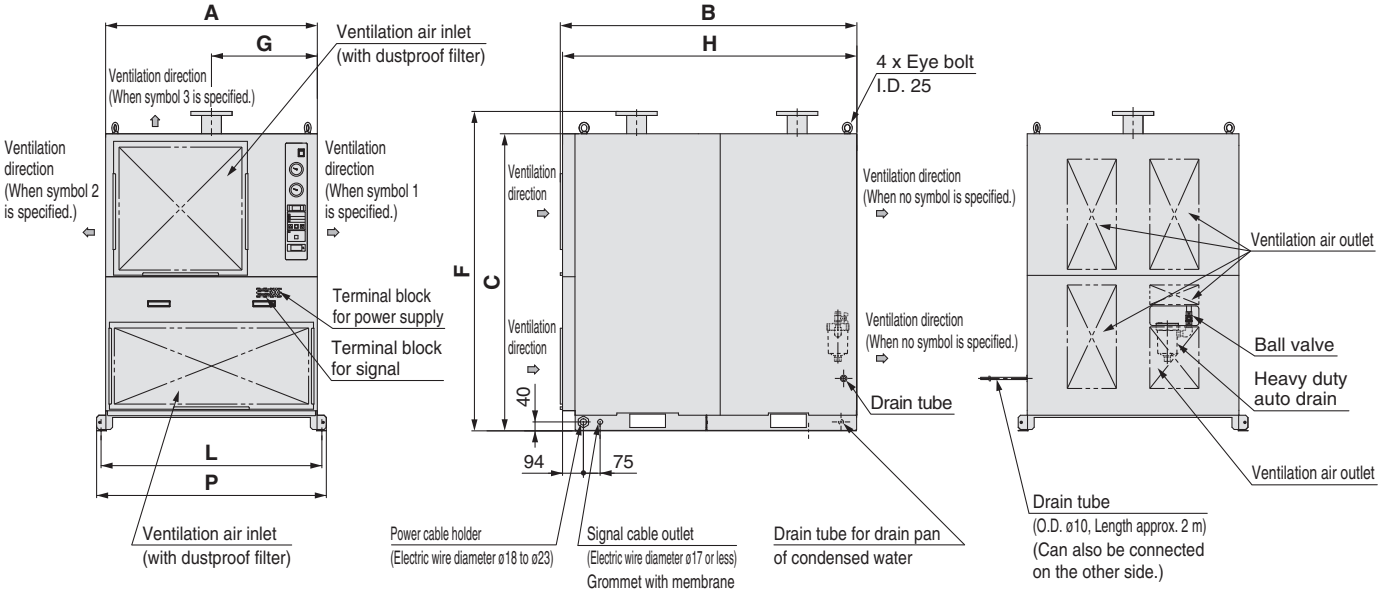

Top view

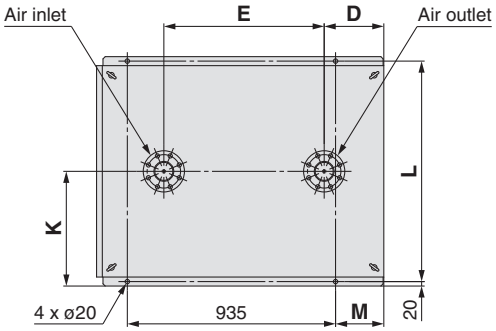

Dimensions (mm)

Model	Port size	A	B	C	D	E	F	G	H	K	L	M	P
IDF125FS	JIS flange 65A 10K	700	1160	1276	267	655	1375	350	1150	376	712	78	752
IDF150FS	JIS flange 80A 10K	950	1330	1332	268	720	1432	475	1320	515	990	217	1030

Slit Dimensions

IDF100FS

Top

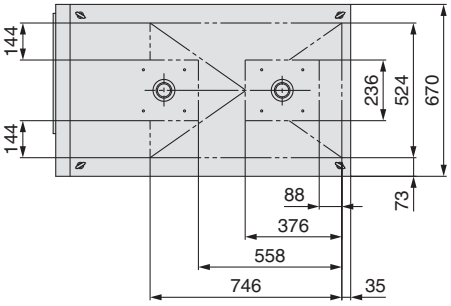

Side

Heat exhausting direction: Panels used for symbols 1 and 2 in How to Order are common.

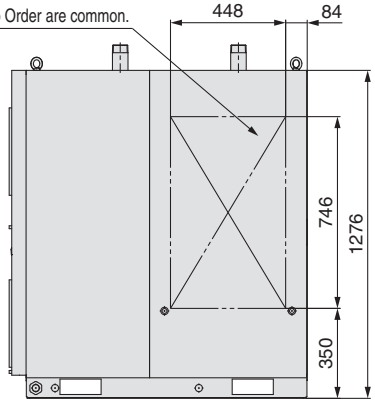

Rear

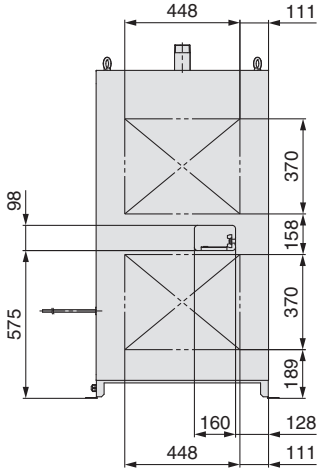

IDF125FS

Top

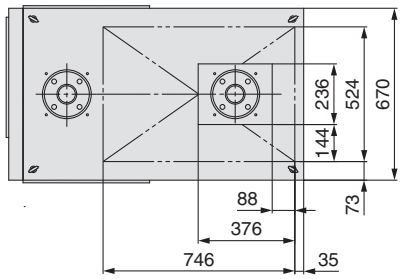

Side

Heat exhausting direction: Panels used for symbols 1 and 2 in How to Order are common.

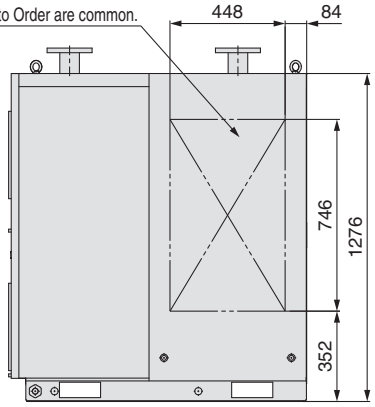

Rear

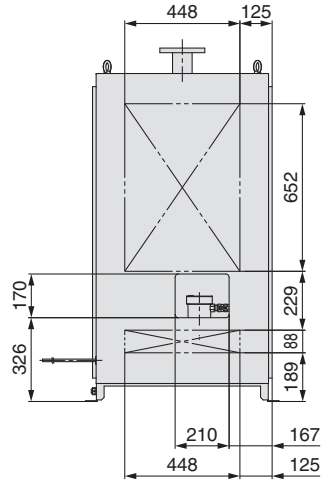

Slit Dimensions

IDF150FS

Top

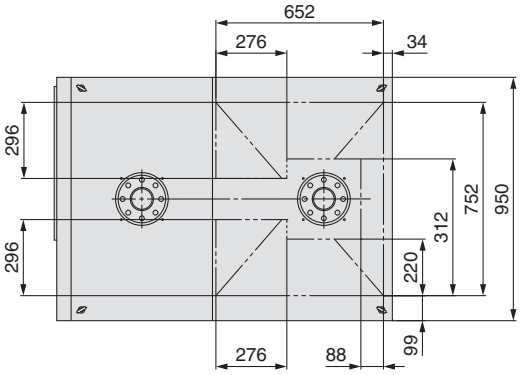

Side

Heat exhausting direction: Panels used for symbols 1 and 2 in How to Order are common.

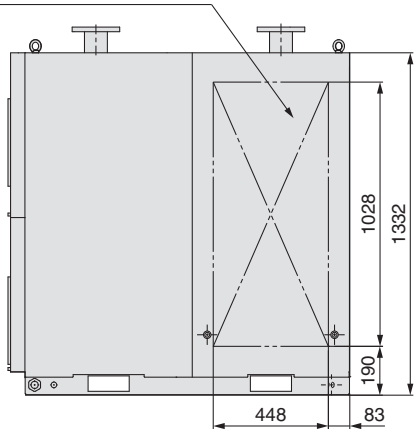

Rear

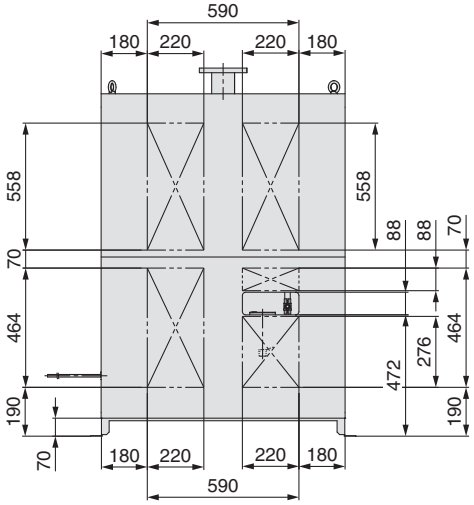

Options

Refer to “How to Order” page 2 for optional models.

C Option symbol

Anti-corrosive treatment for copper tube

This minimizes the corrosion of the copper and copper alloy parts when the air dryer is used in an atmosphere containing hydrogen sulfide or sulfurous acid gas. (Corrosion cannot be completely prevented.)
Special epoxy coating: Copper tube and copper alloy parts
The coating is not applied on the heat exchanger or around electrical parts, where operation may be affected by the coating.

∗ Corrosion is not covered under warranty.

K Option symbol

Moderate pressure specification

The maximum operating pressure is 1.6 MPa.
The internal drain piping material is changed from nylon to metal.

Specifications

1. Maximum operating pressure: 1.6 MPa
2. Dimensions ··· same as standard products

P Option symbol

With a metal name plate

The label identifying the model and specifications of the product is changed to a metal plate which has better endurance.

R Option symbol

With an earth leakage breaker

An earth leakage breaker is installed in the air dryer.
This saves additional electrical wiring at the time of installation.

Air dryer model	IDF100FS-30-R	IDF125FS-30-R IDF150FS-30-R
Breaker capacity	20 A	30 A

Sensitivity current: 30 mA

V Option symbol

With a timer controlled solenoid valve type auto drain

Float type heavy duty auto drain is changed to the solenoid valve type auto drain. Drainage is discharged by controlling a solenoid valve with a timer. A strainer for solenoid valve protection and stop valve are also included.

Replacement Parts

Description	Part no.	Note
Timer type solenoid valve	IDF-S0405	200 VAC

Optional Accessories

Specifications

Description	Contents	Specifications
Separately installed power transformer	Power supply and voltage for those other than the standard	Max. ambient temperature 40°C (Relative humidity 85% or less)
Foundation bolt set	For fixing the air dryer to the foundations Easy to secure by striking the axle	Stainless steel
Piping adapter	For converting the thread type of an IN/OUT fitting for air dryers from Rc to NPT	Copper alloy
Panel for changing heat exhausting direction	For changing the heat exhausting direction of the air-cooled type on site. A slit panel and a panel without slit are used in combination.	Refer to the operation manual for details.

Dimensions

[Separately installed power transformer]

IDF-TR7000-8

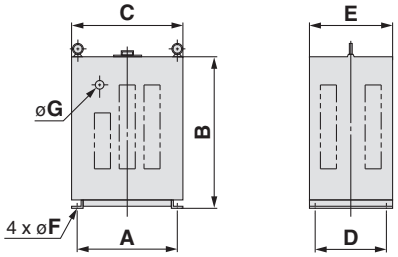

Specifications/Dimensions (mm)

Transformer	Applicable dryer	Capacity	Type	Inlet voltage	Outlet voltage	A	B	C	D	E	F	G	Weight
IDF-TR7000-8	IDF100FS	7 kVA	Three-phase Compound winding	220, 240 380, 400, 415 440 V (50/60 Hz)	200 V (50/60 Hz)	360	540	400	260	300	11	30	94 kg
IDF-TR9000-8	IDF125FS IDF150FS	9 kVA				400	650	450	300	350	13	40	109 kg

[Foundation bolt set]

Specifications

Part no.	Applicable dryer	Nominal thread size	Material	Number of 1 set
IDF-AB501	IDF100FS to 150FS	M10	Stainless steel	4

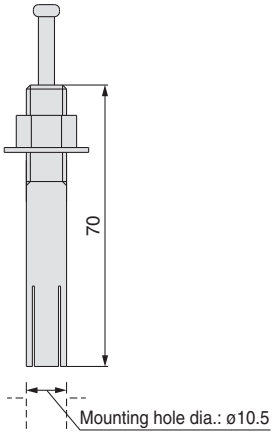

∗ Use a large flat washer when it is used.

[Piping adapter]

IDF-AP607

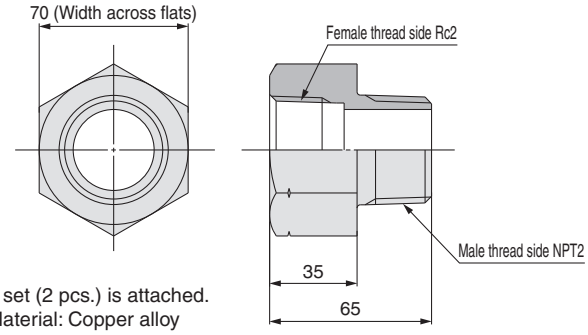

∗ 1 set (2 pcs.) is attached.
∗ Material: Copper alloy

Data

Condensed Water Calculation

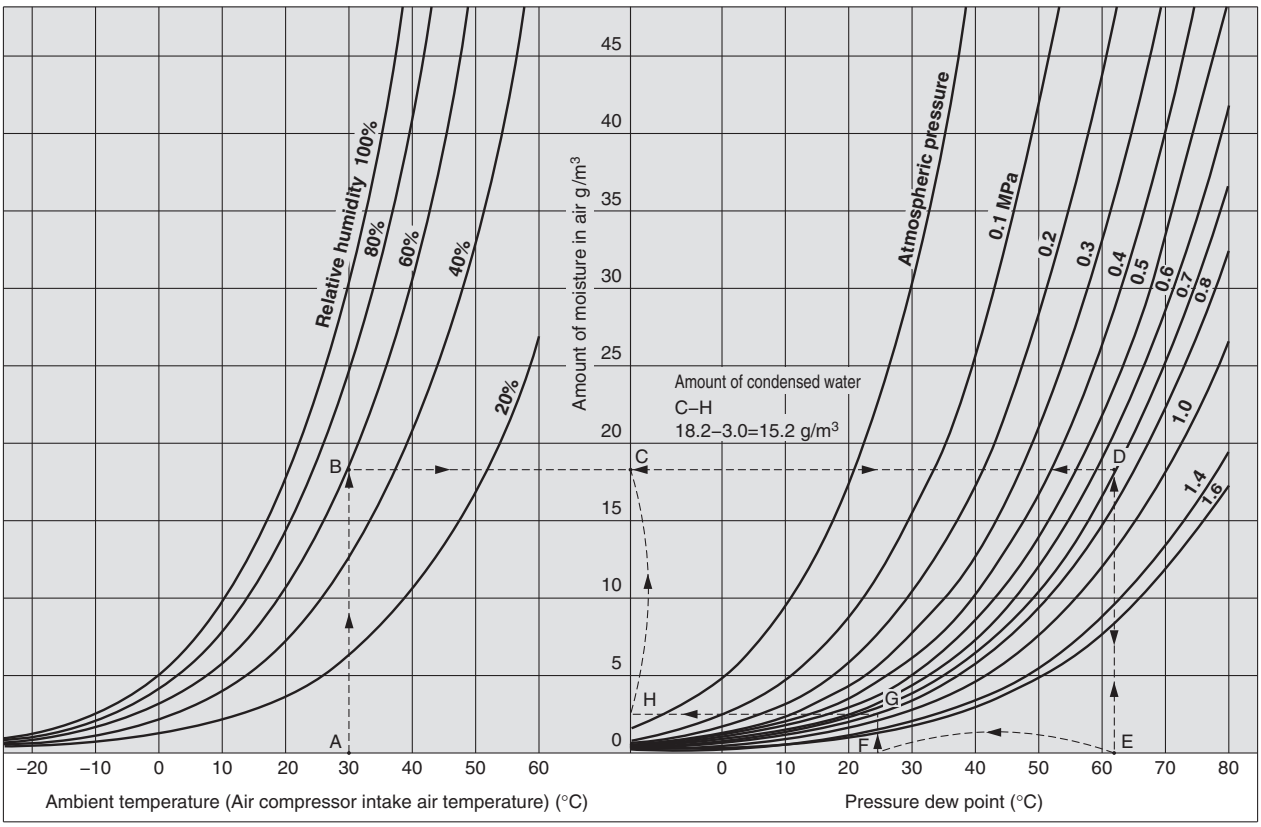

Dew Point Conversion Chart

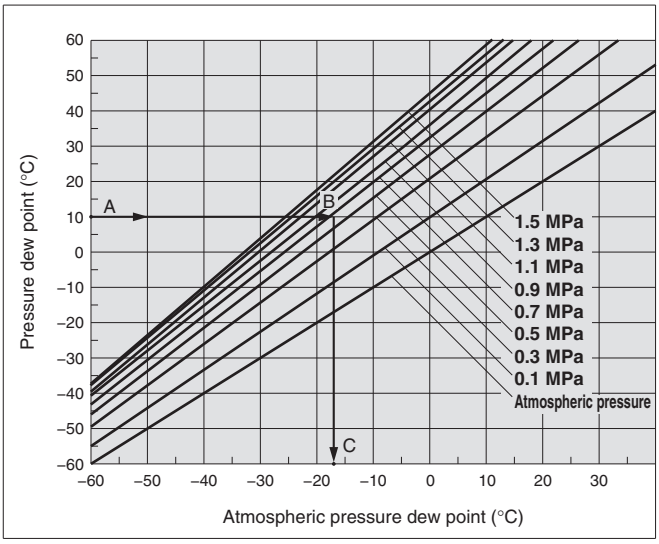

How to read the dew point conversion chart

Example) To obtain the atmospheric pressure dew point at a pressure dew point 10°C and a pressure 0.7 MPa.

1. Trace the arrow mark ⟶ starting from the point A at a pressure dew point 10°C to obtain the intersection B on the pressure characteristic line for 0.7 MPa.
2. Trace the arrow mark ⟶ starting from the point B to obtain the intersection C at the dew point under atmospheric pressure.
3. The intersection C is the conversion value –17°C under atmospheric pressure dew point.

How to calculate the amount of condensed water

Example) To obtain the amount of condensed water when the pressure is applied to air up to 0.7 MPa with an air compressor, then cooled down to 25°C. Given an ambient temperature at 30°C and a relative humidity 60%.

1. Trace the arrow mark from the point A at an ambient temperature 30°C to obtain the intersection B on the curved line for the relative humidity 60%.
2. Trace the arrow mark from the intersection B to obtain the intersection D on the pressure characteristic line for 0.7 MPa.
3. Trace the arrow mark from the intersection D to obtain the intersection E.
4. The intersection E is the dew point under pressure 0.7 MPa with an ambient temperature 30°C and a relative humidity 60%. The value for E is 62°C.
5. Trace the intersection E upward, and trace from the intersection D leftward to obtain the intersection C.
6. The intersection C is the amount of moisture included in the compressed air 1 m³ at 0.7 MPa and a pressure dew point 62°C. **The amount of moisture is 18.2 g/m³.**
7. Trace the arrow mark, starting from F for cooling temperature 25°C (pressure dew point 25°C) to obtain the intersection G on the pressure characteristic line for 0.7 MPa.
8. From the intersection G, trace the arrow mark to obtain the intersection H on the vertical axis.
9. The intersection H is the amount of moisture included in the compressed air 1 m³ at 0.7 MPa, and a pressure dew point 25°C. **The amount of moisture is 3.0 g/m³.**
10. Therefore, the amount of condensed water is as follows.

(per 1 m³)
The amount of moisture at the intersection C
– the amount of moisture at the intersection H
= the amount of condensed water
18.2 – 3.0 = 15.2 g/m³

Series IDF100FS/125FS/150FS
Specific Product Precautions 1

Be sure to read before handling. Refer to back cover for Safety Instructions, "Handling Precautions for SMC Products" (M-E03-3) for Air Preparation Equipment Precautions.

Installation

⚠ Caution

- Avoid locations where the air dryer will be in direct contact with wind and rain. (Avoid locations where relative humidity is 85% or more.)
- Avoid exposure to direct sunlight.
- Avoid locations that contain much dust, corrosive gases, or flammable gases. Failure due to corrosion is not covered under warranty. However, when the risk of corrosion is high, select the option C (anti-corrosive treatment for copper tube).
- Avoid locations of poor ventilation and high temperature.
- Avoid locations where the air dryer is too close to a wall etc. Leave a sufficient space between the air dryer and the wall according to the "Maintenance Space" in the operation manual.
- Avoid locations where the air dryer could draw in high temperature air discharged from an air compressor or other dryer.

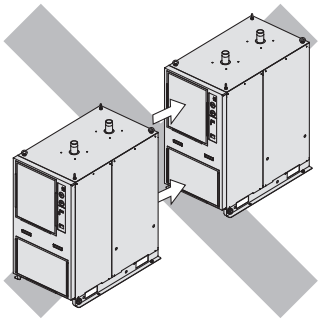

Check that the exhaust air does not flow into the neighboring equipment.

- Avoid locations subjected to vibration.
- Avoid possible locations where the drain can freeze.
- Avoid locations with an ambient temperature over 45°C.
- Avoid installation on machines for transporting, such as vehicles, ships, etc.

Drain Tube

⚠ Caution

- A polyurethane tube is attached as a drain tube for this product. Use this tube to discharge drainage to a drain tank etc.
- Do not use the drain tube in an upward direction. Do not bend or crush the drain tube. (Operation of the auto drain will stop water vapor from discharging through the air outlet.) If it is unavoidable that the tube goes upward, make sure it only goes as far as the position of the auto drain.

Power Supply

⚠ Caution

<200 VAC>

- Connect the power supply to the terminal block.
- Install an earth leakage breaker Note) suitable to each model for the power supply.
- Maintain voltage fluctuation within ±10% of the rated voltage.

Note) Select an earth leakage breaker with a sensitivity current of 30 mA. As regards rated current, refer to "Applicable earth leakage breaker capacity" on page 3.

When the voltage is different from the standard specifications, use a separately installed power transformer on page 10.

Air Piping

⚠ Caution

- Be careful to avoid an error in connecting the air piping at the compressed air inlet (IN) and outlet (OUT).
- Install bypass piping since it is needed for maintenance.
- When tightening the inlet/outlet air piping, hold the dryer-side piping firmly in place with a pipe wrench.
- The piping surface may reach temperatures around 60°C depending on usage conditions. When adjusting valves or performing other such operations, a temperature check is necessary, wear gloves before proceeding.
- Check that vibrations resulting from the compressor are not transmitted through the air piping to the air dryer.
- Do not allow the weight of the piping to lie directly on the air dryer.

Protection Circuit

⚠ Caution

When the air dryer is operated in the following cases, which will activate the protection circuit and turn off the lamp, the air dryer will come to stop.

- The compressed air temperature is too high.
- The compressed air flow rate is too high.
- The ambient temperature is too high. (over 45°C)
- The fluctuation of the power supply is beyond the rated voltage ±10%.
- The air dryer is drawing in high temperature air that is exhausted from an air compressor or other dryer.
- The ventilation port is obstructed by a wall or clogged with dust.

Transportation and Installation

⚠ Warning

Be sure to follow the below instructions for transporting the product.

- The product is filled with refrigerant. Transport it (by land, sea or air) in accordance with laws and regulations specified.
- When carrying the product, be careful not to let it drop or fall over. Lift it by using a fork lift or rope and lifting hook. The lifting angle should be 45°or more.
- Do not lift the product by holding the panel, fittings or piping.
- Never lay the product down for transportation. This may lead to damage to the product.

- The product is heavy and has potential dangers in transportation. Be sure to follow the above instructions.
- Be sure to use a fork lift or lifting hook for transporting the product.

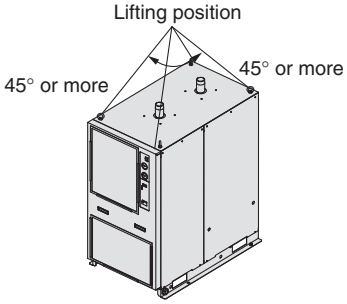

Specific Product Precautions 2

Be sure to read before handling. Refer to back cover for Safety Instructions, "Handling Precautions for SMC Products" (M-E03-3) for Air Preparation Equipment Precautions.

Compressor Air Delivery

⚠ Caution

Use an air compressor with an air delivery of 50 L/min or larger.

Since the auto drain is designed in such a way that the valve remains open unless the air pressure rises to 0.05 MPa or higher, air will blow out from the drain outlet at the time of air compressor start up until the pressure increases. Therefore, if an air compressor has a small air delivery, the pressure may not be sufficient.

Auto Drain

⚠ Caution

The auto drain may not function properly, depending on the quality of the compressed air. Check the operation once a day.

Cleaning of Ventilation Area

⚠ Caution

Remove dust from the ventilation area once a month using a vacuum cleaner or an air blow nozzle.

Time Delay for Restarting

⚠ Caution

Allow at least three minutes before restarting the air dryer. Otherwise, the protection circuit will activate, the lamp will be turned off and the air dryer will not start up.

Modifying the Standard Specifications

⚠ Caution

The heat exhausting direction of the air dryer can be changed using the "panel for changing heat exhausting direction" which is sold separately. Refer to the operation manual.
The other optional specifications cannot be modified once the product has been supplied to a customer. Check the specifications carefully before selecting an air dryer.

⚠ Safety Instructions

These safety instructions are intended to prevent hazardous situations and/or equipment damage. These instructions indicate the level of potential hazard with the labels of **"Caution," "Warning"** or **"Danger."** They are all important notes for safety and must be followed in addition to International Standards (ISO/IEC)*1), and other safety regulations.

⚠ Caution: **Caution** indicates a hazard with a low level of risk which, if not avoided, could result in minor or moderate injury.

⚠ Warning: **Warning** indicates a hazard with a medium level of risk which, if not avoided, could result in death or serious injury.

⚠ Danger : **Danger** indicates a hazard with a high level of risk which, if not avoided, will result in death or serious injury.

*1) ISO 4414: Pneumatic fluid power – General rules relating to systems.
ISO 4413: Hydraulic fluid power – General rules relating to systems.
IEC 60204-1: Safety of machinery – Electrical equipment of machines. (Part 1: General requirements)
ISO 10218-1: Manipulating industrial robots – Safety.
etc.

⚠ Warning

1. **The compatibility of the product is the responsibility of the person who designs the equipment or decides its specifications.**
   Since the product specified here is used under various operating conditions, its compatibility with specific equipment must be decided by the person who designs the equipment or decides its specifications based on necessary analysis and test results. The expected performance and safety assurance of the equipment will be the responsibility of the person who has determined its compatibility with the product. This person should also continuously review all specifications of the product referring to its latest catalog information, with a view to giving due consideration to any possibility of equipment failure when configuring the equipment.
2. **Only personnel with appropriate training should operate machinery and equipment.**
   The product specified here may become unsafe if handled incorrectly. The assembly, operation and maintenance of machines or equipment including our products must be performed by an operator who is appropriately trained and experienced.
3. **Do not service or attempt to remove product and machinery/equipment until safety is confirmed.**
   1. The inspection and maintenance of machinery/equipment should only be performed after measures to prevent falling or runaway of the driven objects have been confirmed.
   2. When the product is to be removed, confirm that the safety measures as mentioned above are implemented and the power from any appropriate source is cut, and read and understand the specific product precautions of all relevant products carefully.
   3. Before machinery/equipment is restarted, take measures to prevent unexpected operation and malfunction.
4. **Contact SMC beforehand and take special consideration of safety measures if the product is to be used in any of the following conditions.**
   1. Conditions and environments outside of the given specifications, or use outdoors or in a place exposed to direct sunlight.
   2. Installation on equipment in conjunction with atomic energy, railways, air navigation, space, shipping, vehicles, military, medical treatment, combustion and recreation, or equipment in contact with food and beverages, emergency stop circuits, clutch and brake circuits in press applications, safety equipment or other applications unsuitable for the standard specifications described in the product catalog.
   3. An application which could have negative effects on people, property, or animals requiring special safety analysis.
   4. Use in an interlock circuit, which requires the provision of double interlock for possible failure by using a mechanical protective function, and periodical checks to confirm proper operation.

⚠ Caution

1. **The product is provided for use in manufacturing industries.**
   The product herein described is basically provided for peaceful use in manufacturing industries.
   If considering using the product in other industries, consult SMC beforehand and exchange specifications or a contract if necessary.
   If anything is unclear, contact your nearest sales branch.

Limited warranty and Disclaimer/ Compliance Requirements

The product used is subject to the following "Limited warranty and Disclaimer" and "Compliance Requirements".
Read and accept them before using the product.

Limited warranty and Disclaimer

1. The warranty period of the product is 1 year in service or 1.5 years after the product is delivered, whichever is first.*2)
   Also, the product may have specified durability, running distance or replacement parts. Please consult your nearest sales branch.
2. For any failure or damage reported within the warranty period which is clearly our responsibility, a replacement product or necessary parts will be provided.
   This limited warranty applies only to our product independently, and not to any other damage incurred due to the failure of the product.
3. Prior to using SMC products, please read and understand the warranty terms and disclaimers noted in the specified catalog for the particular products.

***2) Vacuum pads are excluded from this 1 year warranty.**
A vacuum pad is a consumable part, so it is warranted for a year after it is delivered.
Also, even within the warranty period, the wear of a product due to the use of the vacuum pad or failure due to the deterioration of rubber material are not covered by the limited warranty.

Compliance Requirements

1. The use of SMC products with production equipment for the manufacture of weapons of mass destruction (WMD) or any other weapon is strictly prohibited.
2. The exports of SMC products or technology from one country to another are governed by the relevant security laws and regulations of the countries involved in the transaction. Prior to the shipment of a SMC product to another country, assure that all local rules governing that export are known and followed.

⚠ Safety Instructions	Be sure to read "Handling Precautions for SMC Products" (M-E03-3) before using.

SMC Corporation
Akihabara UDX 15F,
4-14-1, Sotokanda, Chiyoda-ku, Tokyo 101-0021, JAPAN
Phone: 03-5207-8249 Fax: 03-5298-5362
http://www.smcworld.com
© 2013 SMC Corporation All Rights Reserved

Specifications are subject to change without prior notice and any obligation on the part of the manufacturer.
D-G
1st printing RP printing RP 8150SZ Printed in Japan.