Series LMU100/200
Related Products

Mixing Valve: Series LMV

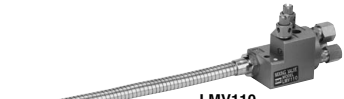

LMV110

LMV220

Specifications

Inlet air pressure		0.3 MPa Max.
Ambient and fluid temperature		5 to 60°C
Port size	**AIR**	T0604 (ø6 tube) applicable
	OIL	T0425 (ø4 tube) applicable
	AIR BLOW	T0806 (ø8 tube) applicable

How to Order

LMV 1 1 0 – 20

- **Mixing valve**
- **Air blow circuit**

1	Available
2	Not available

- **Nozzle tubing construction**

1	Flexible tubing
2	Copper tubing

- **Nozzle tubing length: L**

20	200 mm
25	250 mm
30	300 mm
35	350 mm

Construction

LMV1□0/With air blow circuit

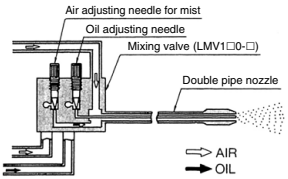

LMV2□0/Without air blow circuit

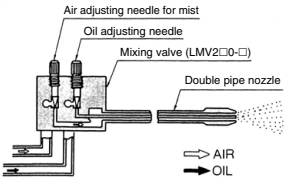

Dimensions

LMV1□0-□

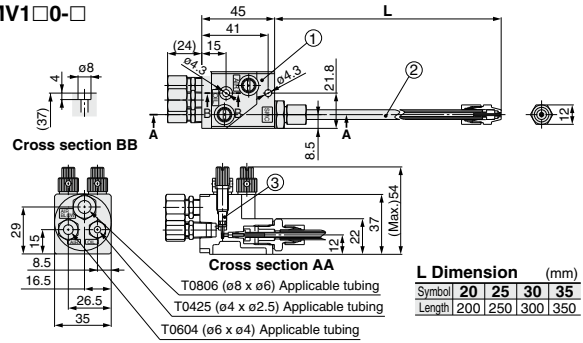

L Dimension (mm)

Symbol	20	25	30	35
Length	200	250	300	350

LMV2□0-□

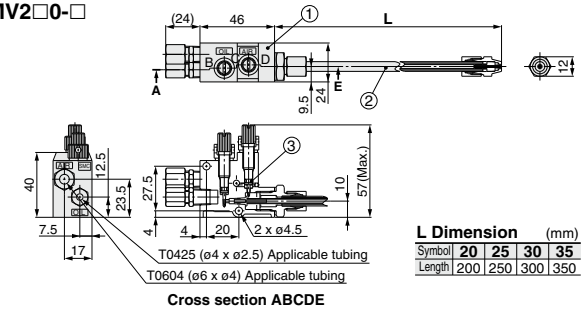

L Dimension (mm)

Symbol	20	25	30	35
Length	200	250	300	350

Main Parts List

No.	Description	Material	Note
1	**Mixing valve body**	Aluminum die-casted	Platinum silver coated

Spare Parts/Replacement Parts Part No.

No.	Description	Material	Qty.	Part no. LMV□10	Part no. LMV□20
2	**Flexible nozzle assembly**	—	1	81023-2A-1 to 4 Note 1)	—
	Copper piping nozzle assembly	—	1	—	81023-31A-1 to 4 Note 1)
3	**O-ring**	FKM	2	123116-2	

Note 1) Numbers indicate nozzle lengths. –1: 200 mm, –2: 250 mm, –3: 300 mm, –4: 350 mm