No.PF※※-OMJ0018-D

Operation Manual

PRODUCT NAME

Digital Flow Switch
(Remote type monitor unit)

MODEL / Series / Product Number

PFM3##

SMC Corporation

Table of Contents

Safety Instructions	2
Model Indication and How to Order	9
Summary of Product parts	12
Mounting and Installation	13
Installation	13
Wiring	15
Flow Setting	19
Function Setting	21
Default settings	21
F0 Selection of connected sensor • Unit selection function	22
F1 Setting of OUT1	24
F2 Setting of OUT2	27
F3 Operating fluid	28
F4 Reference condition	29
F5 Response time	30
F6 Display mode	31
F7 External input	32
F8 Display resolution	35
F9 Auto-preset	36
F10 Accumulated value hold	38
F11 Analogue output filter	39
F12 Power saving mode	40
F13 Security code	41
F98 Setting of all functions	42
F99 Reset to the default settings	44
Other Settings	45
Maintenance	49
Troubleshooting	50
Error indication	52
Specification	53
Specifications	53
Characteristics data	55
Dimensions	56

Safety Instructions

These safety instructions are intended to prevent hazardous situations and/or equipment damage.
These instructions indicate the level of potential hazard with the labels of "Caution", "Warning" or "Danger".
They are all important notes for safety and must be followed in addition to International Standards (ISO/IEC)*1), and other safety regulations.

*1) ISO 4414: Pneumatic fluid power -- General rules relating to systems.
ISO 4413: Hydraulic fluid power -- General rules relating to systems.
IEC 60204-1: Safety of machinery -- Electrical equipment of machines .(Part 1: General requirements)
ISO 10218: Manipulating industrial robots -Safety.
etc.

⚠	**Caution**	**Caution** indicates a hazard with a low level of risk which, if not avoided, could result in minor or moderate injury.
⚠	**Warning**	**Warning** indicates a hazard with a medium level of risk which, if not avoided, could result in death or serious injury.
⚠	**Danger**	**Danger** indicates a hazard with a high level of risk which, if not avoided, will result in death or serious injury.

⚠Warning

1. The compatibility of the product is the responsibility of the person who designs the equipment or decides its specifications.

Since the product specified here is used under various operating conditions, its compatibility with specific equipment must be decided by the person who designs the equipment or decides its specifications based on necessary analysis and test results.
The expected performance and safety assurance of the equipment will be the responsibility of the person who has determined its compatibility with the product.
This person should also continuously review all specifications of the product referring to its latest catalog information, with a view to giving due consideration to any possibility of equipment failure when configuring the equipment.

2. Only personnel with appropriate training should operate machinery and equipment.

The product specified here may become unsafe if handled incorrectly.
The assembly, operation and maintenance of machines or equipment including our products must be performed by an operator who is appropriately trained and experienced.

3. Do not service or attempt to remove product and machinery/equipment until safety is confirmed.

1. The inspection and maintenance of machinery/equipment should only be performed after measures to prevent falling or runaway of the driven objects have been confirmed.
2. When the product is to be removed, confirm that the safety measures as mentioned above are implemented and the power from any appropriate source is cut, and read and understand the specific product precautions of all relevant products carefully.
3. Before machinery/equipment is restarted, take measures to prevent unexpected operation and malfunction.

4. Contact SMC beforehand and take special consideration of safety measures if the product is to be used in any of the following conditions.

1. Conditions and environments outside of the given specifications, or use outdoors or in a place exposed to direct sunlight.
2. Installation on equipment in conjunction with atomic energy, railways, air navigation, space, shipping, vehicles, military, medical treatment, combustion and recreation, or equipment in contact with food and beverages, emergency stop circuits, clutch and brake circuits in press applications, safety equipment or other applications unsuitable for the standard specifications described in the product catalog.
3. An application which could have negative effects on people, property, or animals requiring special safety analysis.
4. Use in an interlock circuit, which requires the provision of double interlock for possible failure by using a mechanical protective function, and periodical checks to confirm proper operation.

Safety Instructions

⚠Caution

1.The product is provided for use in manufacturing industries.
The product herein described is basically provided for peaceful use in manufacturing industries.
If considering using the product in other industries, consult SMC beforehand and exchange specifications or a contract if necessary.
If anything is unclear, contact your nearest sales branch.

Limited warranty and Disclaimer/Compliance Requirements

The product used is subject to the following "Limited warranty and Disclaimer" and "Compliance Requirements".
Read and accept them before using the product.

Limited warranty and Disclaimer

1. **The warranty period of the product is 1 year in service or 1.5 years after the product is delivered, whichever is first.∗2)**
   Also, the product may have specified durability, running distance or replacement parts. Please consult your nearest sales branch.
2. **For any failure or damage reported within the warranty period which is clearly our responsibility, a replacement product or necessary parts will be provided.**
   This limited warranty applies only to our product independently, and not to any other damage incurred due to the failure of the product.
3. **Prior to using SMC products, please read and understand the warranty terms and disclaimers noted in the specified catalog for the particular products.**

∗2) Vacuum pads are excluded from this 1 year warranty.
A vacuum pad is a consumable part, so it is warranted for a year after it is delivered.
Also, even within the warranty period, the wear of a product due to the use of the vacuum pad or failure due to the deterioration of rubber material are not covered by the limited warranty.

Compliance Requirements

1. **The use of SMC products with production equipment for the manufacture of weapons of mass destruction (WMD) or any other weapon is strictly prohibited.**
2. **The exports of SMC products or technology from one country to another are governed by the relevant security laws and regulation of the countries involved in the transaction. Prior to the shipment of a SMC product to another country, assure that all local rules governing that export are known and followed.**

⚠Caution

SMC products are not intended for use as instruments for legal metrology.
Products that SMC manufactures or sells are not measurement instruments that are qualified by pattern approval tests relating to the measurement laws of each country.
Therefore, SMC products cannot be used for business or certification ordained by the measurement laws of each country.

Operator

- ♦This operation manual is intended for those who have knowledge of machinery using pneumatic equipment, and have sufficient knowledge of assembly, operation and maintenance of such equipment. Only those persons are allowed to perform assembly, operation and maintenance.
- ♦Read and understand this operation manual carefully before assembling, operating or providing maintenance to the product.

■Safety Instructions

⚠Warning
■Do not disassemble, modify (including changing the printed circuit board) or repair. An injury or failure can result.
■Do not operate the product outside of the specifications. Do not use for flammable or harmful fluids. Fire, malfunction, or damage to the product can result. Verify the specifications before use.
■Do not operate in an atmosphere containing flammable, explosive or corrosive gas. Fire or an explosion can result. This product is not designed to be explosion proof.
■Do not use the product in a place where static electricity is a problem. Otherwise it can cause failure or malfunction of the system.
■If using the product in an interlocking circuit: •Provide a double interlocking system, for example a mechanical system •Check the product regularly for proper operation Otherwise malfunction can result, causing an accident.
■The following instructions must be followed during maintenance : •Turn off the power supply •Stop the air supply, exhaust the residual pressure and verify that the air is released before performing maintenance work Otherwise an injury can result.

⚠ Caution

■Do not touch the terminals and connectors while the power is on.
Otherwise electric shock, malfunction or damage to the product can result.

■After maintenance is complete, perform appropriate functional inspections and leak tests.
Stop operation if the equipment does not function properly or there is a leakage of fluid.

■NOTE

○Follow the instructions given below when designing, selecting and handling the product.

●The instructions on design and selection (installation, wiring, environment, adjustment, operation, maintenance, etc.) described below must also be followed.

∗Product specifications

- The direct current power supply used should be UL approved as follows.
  Circuit (Class 2) of maximum 30 Vrms (42.4 V peak) or less, with UL1310 Class 2 power supply unit or UL1585 Class 2 transformer.
- The product is a UL approved product only if it has a c UL us mark on the body.
- Use the specified voltage.
  Otherwise failure or malfunction can result.
  Insufficient supply voltage may not drive a load due to a voltage drop inside the product.
  Verify the operating voltage of the load before use.
- Do not exceed the specified maximum allowable load.
  Otherwise it can cause damage or shorten the lifetime of the product.
- Data stored by the product is not deleted, even if the power supply is cut off.
  (Writing time: 1000000 cycles, Data duration: 20 years after power off.)
- Reserve a space for maintenance.
  Allow sufficient space for maintenance when designing the system.

●Product handling

∗Installation

- •Tighten to the specified tightening torque.
  If the tightening torque is exceeded the mounting screws and brackets may damaged.
  If the tightening torque is insufficient, the product may be displaced and the mounting screws may come loose
  (Refer to page 13 "Mounting and Installation".)
- •Do not apply excessive stress to the product when it is panel mounted
  Otherwise damage to the product and disconnection from the panel mount can result.
- •Ensure that the FG terminal is connected to ground when using a commercially available switch-mode power supply.
- •Do not drop, hit or apply excessive shock to the product.
  Otherwise damage to the internal parts can result, causing malfunction.
- •Do not pull the lead wire forcefully, not lift the product by pulling the lead wire. (Tensile force 49 N or less)
  Hold the product body when handling, to prevent damage, failure or malfunction
- •Never mount a product in a location that will be used as a foothold.
  The product may be damaged if excessive force is applied by stepping or climbing onto it.

∗Wiring

- •Do not pull the lead wires.
  In particular, never lift a product equipped with fitting and piping by holding the lead wires.
  Otherwise damage to the internal parts can result, causing malfunction or disconnection of the connector.
- •Avoid repeatedly bending or stretching the lead wire, or placing heavy loads on it
  Repeated bending stress or tensile stress can cause damage to the sheath, or breakage of the wires.
  If the lead wire can move, fix it near the body of the product.
  The recommended bend radius of the lead wire is 6 times the outside diameter of the sheath, or 33 times the outside diameter of the wire insulation material, whichever is larger.
  Replace any damaged lead wire with a new one.
- •Wire correctly.
  Incorrect wiring can damage the product.
- •Do not perform wiring while the power is on.
  Otherwise damage to the internal parts can result, causing malfunction.
- •Do not route wires and cables together with power or high voltage cables.
  Otherwise the product can malfunction due to interference or noise and surge voltage from power and high voltage cables.
- •Confirm proper insulation of wiring.
  Poor insulation (interference from another circuit, poor insulation between terminals, etc.) can lead to excess voltage or current being applied to the product, causing damage.
- •Keep wiring as short as possible to prevent interference from electromagnetic noise and surge voltage.
  Do not use a cable longer than 10 m.
  Wire the DC (-) line (blue) as close as possible to the power supply.
- •When analogue output is used, install a noise filter (line noise filter, ferrite element, etc.) between the switch-mode power supply and this product.

∗Environment

- Do not use the product in area that is exposed to corrosive gases, chemicals, sea water, water or steam.
  Otherwise failure or malfunction can result.
- Do not use in a place where the product could be splashed by oil or chemicals.
  If the product is to be used in an environment containing oils or chemicals such as coolant or cleaning solvent, even for a short time, it may be adversely affected (damage, malfunction, or hardening of the lead wires)
- Do not use in an area where electrical surges are generated.
  If there is equipment generates large electrical surges (solenoid type lifter, high frequency induction furnace, motor, etc.) close to the product, damage or failure of the internal circuit may occur. Take measures against the surge sources, and prevent the wires from coming into close contact.
- Do not use a load which generates a surge voltage.
  When a surge-generating load such as a relay or solenoid is driven directly, use a product with a built-in surge absorbing element.
- The product is CE marked, but not immune to lightning strikes. Take measures against lightning strikes in the system.
- Do not use the product in areas that are exposed to vibration or impact.
  Otherwise failure or malfunction can result.
- Do not use the product in the presence of a magnetic field.
  This may lead to the malfunction of the product.
- Prevent foreign matter such as wire debris from entering the product.
  Otherwise failure or malfunction can result.
- Do not use the product in areas subject to large temperature cycle.
  Heating/cooling cycles other than ordinary changes in temperature can adversely affect the internal structure of the product
- Do not expose the product to direct sunlight.
  If using in a location directly exposed to sunlight, use a suitable protective cover.
  Otherwise failure or malfunction can result.
- Keep within the operating temperatures range.
  Operating temperature range is 0 to 50 °C.
  Operation below the minimum temperature limit may cause damage or operation failure due to frozen moisture in the fluid or air.
  Avoid sudden temperature changes even within the specified temperature range.
- Do not operate close to a heat source, or in a location exposed to radiant heat.
  Otherwise malfunction can result.

∗Adjustment and Operation

- Connect load before turning on the power.
- Do not short-circuit the load.
  Although an error is displayed when the product load is short circuited, excess current may cause damage to the product.
- Do not press the setting buttons with a sharp pointed object.
  This may damage the setting buttons.
- Supply the power when there is no flow.
- The output is off for 3 seconds after power is supplied.
- Use settings suitable for the operating conditions.
  Incorrect settings can cause operational failure.
  (Refer to page 19 "Flow Setting".)
- During the initial setting and any subsequent flow rate setting, the product will switch the output according to the existing settings until the changes are complete.
  Confirm the output has no adverse effect on machinery and equipment before setting.
  Stop the control system before setting if necessary.
- Do not touch the LCD during operation.
  The display can vary due to static electricity.

∗Maintenance

- Perform regular maintenance and inspections.
  There is a risk of unexpected malfunction of components due to the malfunction of equipment and machinery.
- Turn off the power supply, stop the supplied air, exhaust the residual pressure and verify the release of air before performing maintenance.
  There is a risk of unexpected malfunction.
- Do not use solvents such as benzene, thinner etc. to clean the product.
  They could damage the surface of the body and erase the markings on the body.
  Use a soft cloth to remove stains.
  For heavy stains, use a cloth lightly dampened with diluted neutral detergent, then wipe up any residue with a dry cloth.

Model Indication and How to Order

PFM 3 □□ - □□□□ - □□

Remote type monitor

Input specification

Symbol	Content	Applicable model
0	Voltage input	PFM5□□(S)-□-1-□
1	Current input	PFM5□□(S)-□-2-□

Output specification

Symbol	Content
0	NPN (2 output) + Analogue (1 to 5 V)
1	NPN (2 output) + Analogue (4 to 20 mA)
2	NPN (2 output) + External input *1
3	PNP (2 output)+ Analogue (1 to 5 V)
4	PNP (2 output)+ Analogue (4 to 20 mA)
5	PNP (2 output)+ External input *1

*1: External reset auto-shift and auto-shift zero are selectable.

Calibration certificate

Symbol	Content
Nil	without calibration certificate
A	with calibration certificate *2

*2: Certificate in both Japanese and English.

Operation manual

Symbol	Content
Nil	with operation manual (Japanese and English)
N	without operation manual

Option 3
(Refer to page11.)

Option 2
(Refer to page10.)

Option 1
(Refer to page10.)

Unit specification

Symbol	Content
Nil	Unit selection function *3
M	SI units only *4

*3: Since the unit for Japan is fixed to SI due to new measurement law, this option is for overseas.
*4: Fixed unit Instantaneous flow: L/min, Accumulated flow: L

Option 1

Nil	L
without lead wire 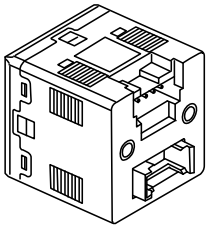	with power and output lead wire and connector 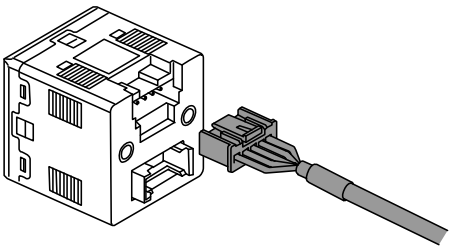

Option 2

Nil	E
without bracket 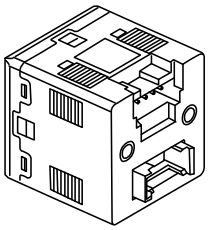	with bracket 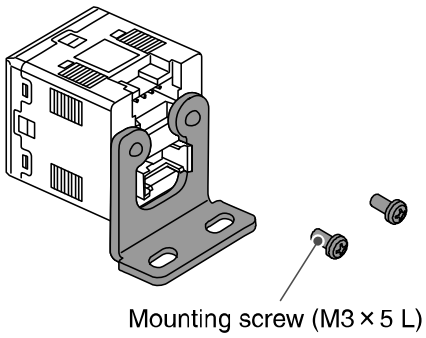

B	D
with panel mount adapter 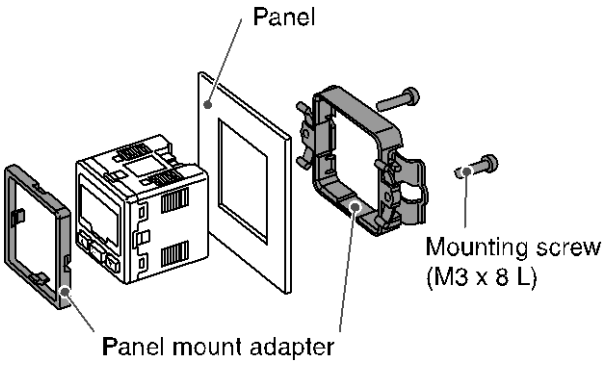	with panel mount adapter + front protective cover 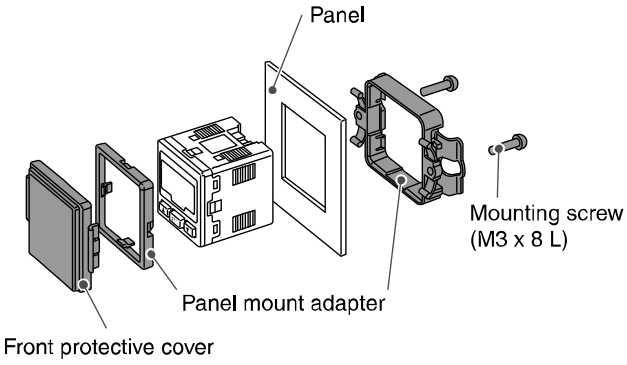

∗: Each accessory is not assembled with the product, but shipped together.

Option 3

Nil	F
without sensor connector 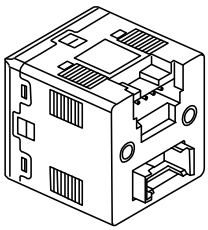	with sensor connector 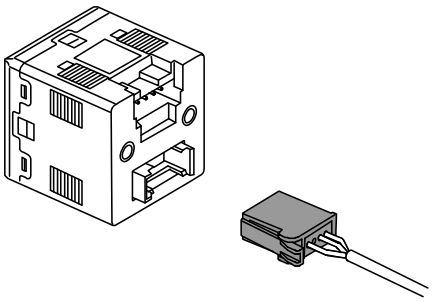

∗: Each accessory is not assembled with the product, but shipped together.

Accessories/Part number

If an accessory is required separately, order using the following part numbers.

Part number	Description	Remarks
ZS-28-A	Power and output lead wire and connector	Length: 2 m
ZS-28-B	Bracket	Mounting screw (M3 x 5 L) 2 pcs.
ZS-28-C-1	Sensor connector	1 pc.
ZS-27-C	Panel mount adapter	Mounting screw (M3 x 8 L) 2 pcs.
ZS-27-D	Panel mount adapter + Front protective cover	Mounting screw (M3 x 8 L) 2 pcs.
ZS-27-01	Front protective cover	

Summary of Product parts

Front

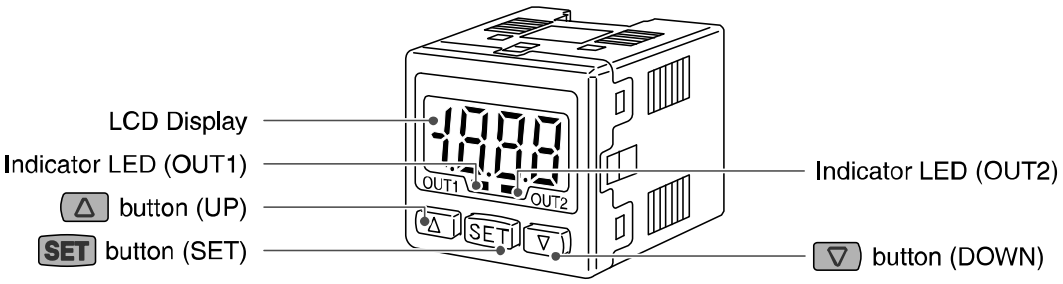

Item	Description
LCD Display	Displays the flow value, setting mode, and error indication. Four display modes can be selected: display always in red or green, or display changing from green to red, or red to green, according to the output status (OUT1).
Indicator LED (OUT1)	Indicates the output status of OUT1. LED is ON (Green) when OUT1 is ON. When the accumulated pulse output mode is selected, the indicator LED will turn OFF.
Indicator LED (OUT2)	Indicates the output status of OUT2. LED is ON (Red) when OUT2 is ON. When the accumulated pulse output mode is selected, the indicator LED will turn OFF.
button (UP)	Selects the mode or increases the ON/OFF set value. Press this button to change to the peak display mode.
SET button (SET)	Press this button to change to another mode and to set a value.
button (DOWN)	Selects the mode or decreases the ON/OFF set value. Press this button to change to the bottom display mode.

Back

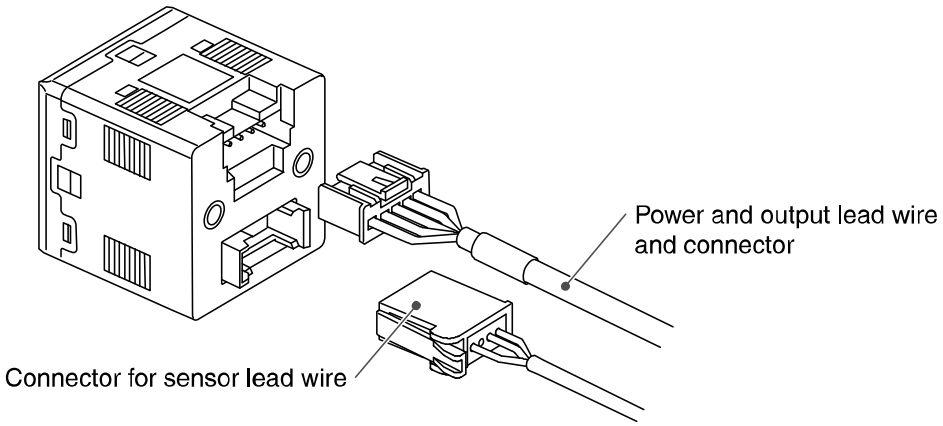

Item	Description
Power and output lead wire and connector	Cable to supply power and transmit output signals.
Sensor connector	Connector for sensor lead wire.

Mounting and Installation

■Installation

Panel mounting

- Fix the panel mount adapter to the monitor with the mounting screws (M3 x 8 L) supplied.
- The monitor can be mounted on a panel with a thickness of 0.5 to 6.0 mm.
- Refer to the dimension drawing (page 56) for panel cut-out dimensions.

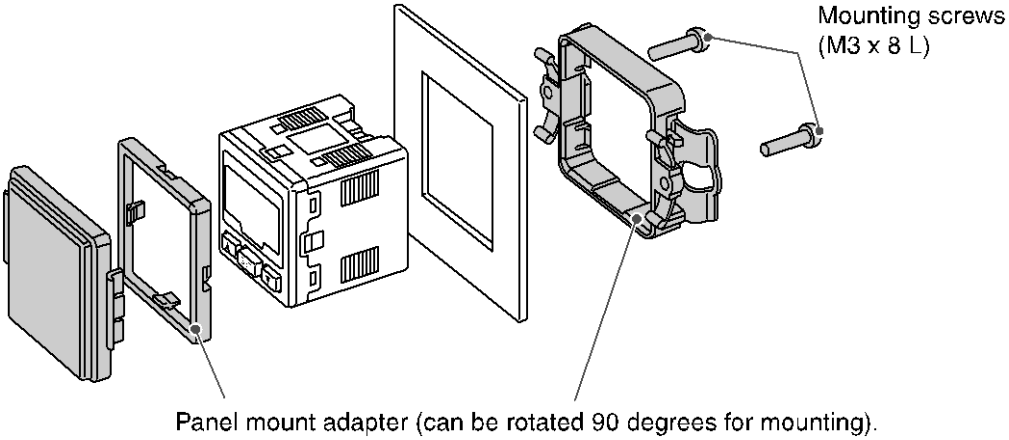

Note when removing the monitor

- The flow monitor with panel mount adapter can be removed from the installation by removing 2 screws and releasing the hooks at the sides, as illustrated.
- Take care not to damage the product and panel mount adapter.

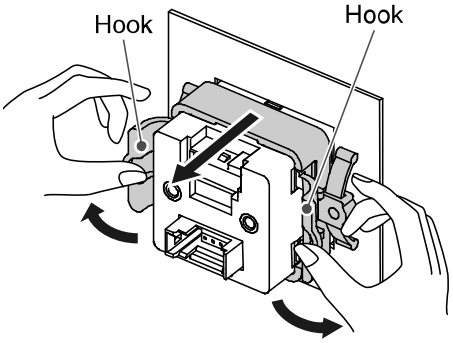

Bracket mounting

•Mount the bracket using the mounting screws (M3 x 5 L) supplied.
•The required tightening torque is 0.5 to 0.7 Nm.

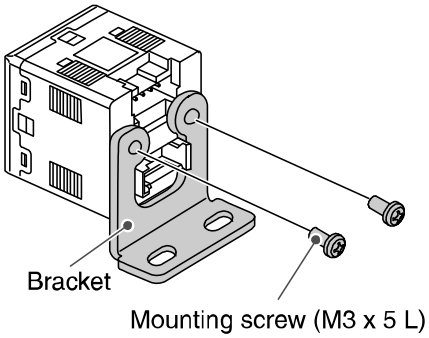

•Install the product (with bracket) using the M4 screws (2 pcs.).
•Bracket thickness is approximately 1.6 mm.
•Refer to the dimension drawing of the bracket (page 57) for mounting hole dimensions.

■Wiring

Wiring of connector

- Connections should only be made with the power supply turned off.
- Use separate routes for the product wiring and any power or high voltage wiring. Otherwise, malfunction may result due to noise.
- Ensure that the FG terminal is connected to ground when using a commercially available switch-mode power supply. When a switch-mode power supply is connected to the product, switching noise will be superimposed and the product specification can no longer be met. This can be prevented by inserting a noise filter, such as a line noise filter and ferrite core, between the switch-mode power supply and the product, or by using a series power supply instead of a switch-mode power supply.

Attaching the connector to the sensor wire

- Strip the sensor wire as shown.
- Do not cut the insulator.
- Insert the corresponding wire colour shown in the table into the pin number printed on the sensor connector, to the bottom.

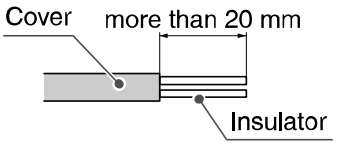

Pin no.	Wire colour	Description
1	Brown	DC(+)
2	NC	-
3	Blue	DC(-)
4	Black	IN (1 to 5 V)

- Check that the above preparation has been performed correctly, then part A shown should be pressed in by hand to make temporary connection.

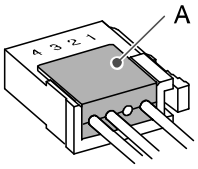

- Part A should then be pressed in using a suitable tool, such as pliers.

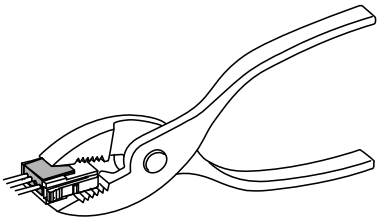

- The sensor connector cannot be re-used once it has been fully crimped.
  In cases of connection failure such as incorrect order of wires or incomplete insertion, please use a new connector.
- If the sensor is not connected correctly "LLL" or "HHH" will be displayed.

Connecting/Disconnecting

- When mounting the connector, insert it straight into the socket, holding the lever and connector body, and push the connector until the lever hooks into the housing, and locks.
- When removing the connector, press down the lever to release the hook from the housing and pull the connector straight out.

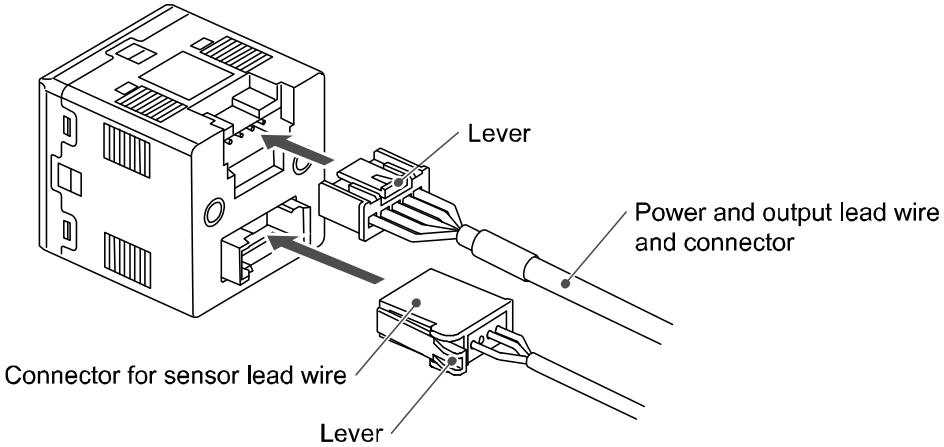

Power and output connector pin numbers (on the lead wire)

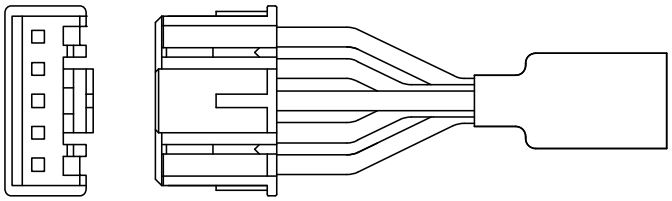

Wire colour	Description
Brown	DC(+)
Black	OUT1
White	OUT2
Grey	Analogue output/External input
Blue	DC(-)

Internal circuit and wiring example

PFM3□0

NPN (2 outputs) + Analogue (1 to 5 V) output type

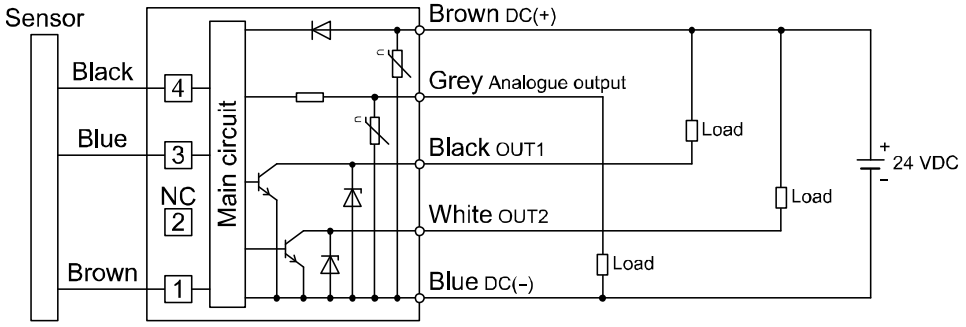

Max. 30 V, 80 mA
Internal voltage drop: 1 V or less
Analogue output: 1 to 5 V
Output impedance: approx. 1 kΩ

PFM3□1

NPN (2 outputs) + Analogue (4 to 20 mA) output type

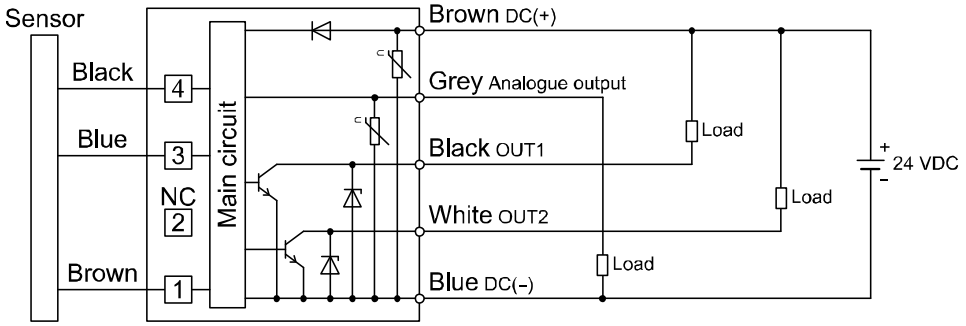

Max. 30 V, 80 mA
Internal voltage drop: 1 V or less
Analogue output: 4 to 20 mA
Max. load impedance: 600 Ω (24 VDC)
Min. load impedance: 50 Ω

PFM3□2

NPN (2 outputs) + External input type

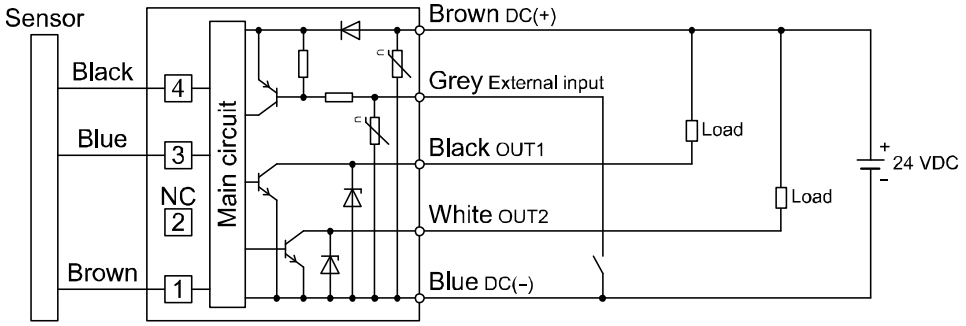

Max. 30 V, 80 mA
Internal voltage drop: 1 V or less
External input: No voltage input (reed switch or solid state), 30 ms or more

PFM3□3

PNP (2 outputs) + Analogue (1 to 5 V) output type

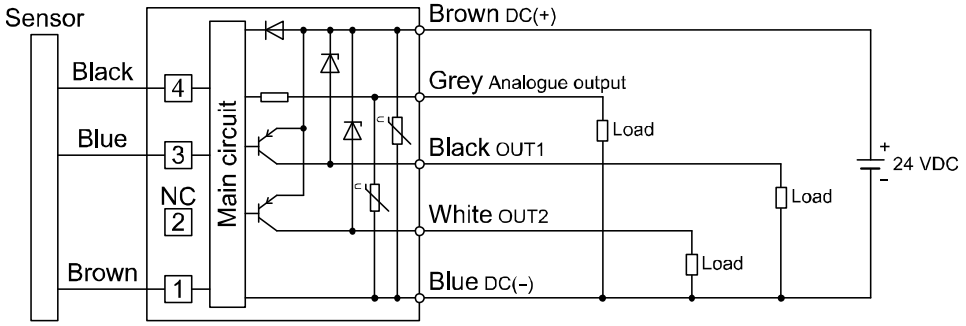

Max. 80 mA
Internal voltage drop: 1 V or less
Analogue output: 1 to 5 V
Output impedance: approx. 1 kΩ

PFM3□4

PNP (2 outputs) + Analogue (4 to 20 mA) output type

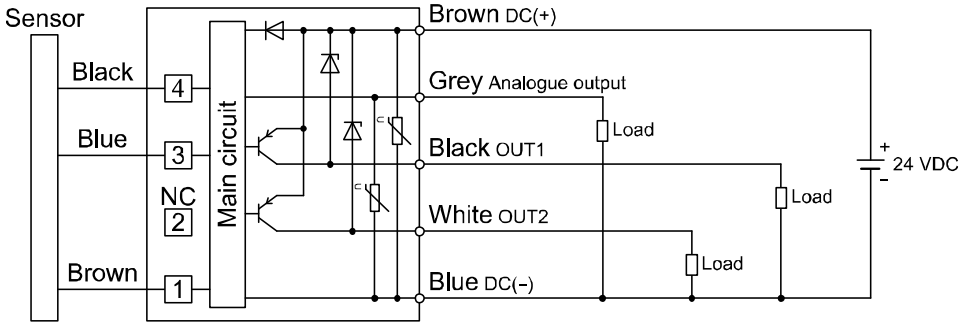

Max. 80 mA
Internal voltage drop: 1 V or less
Analogue output: 4 to 20 mA
Max. load impedance: 600 Ω (24 VDC)
Min. load impedance: 50 Ω

PFM3□5

PNP (2 outputs) + External input type

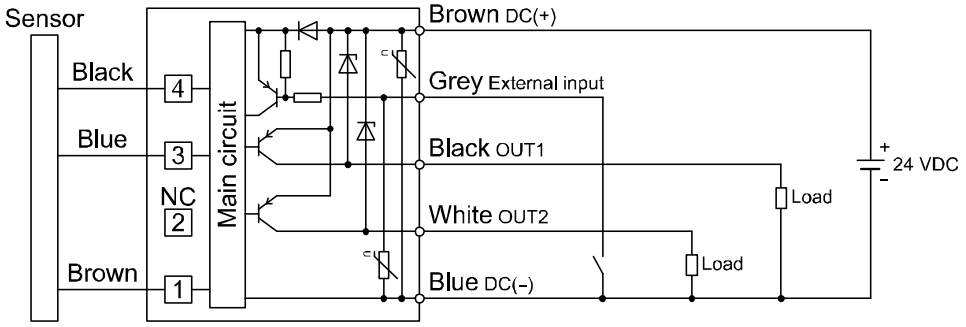

Max. 80 mA
Internal voltage drop: 1 V or less
External input: No voltage input (reed switch or solid state), 30 ms or more

Flow Setting

Measurement mode

The mode in which the flow is detected and displayed, and the switch function is operating.
This is the basic operating mode; other modes should be selected for set-point and other Function Setting changes.

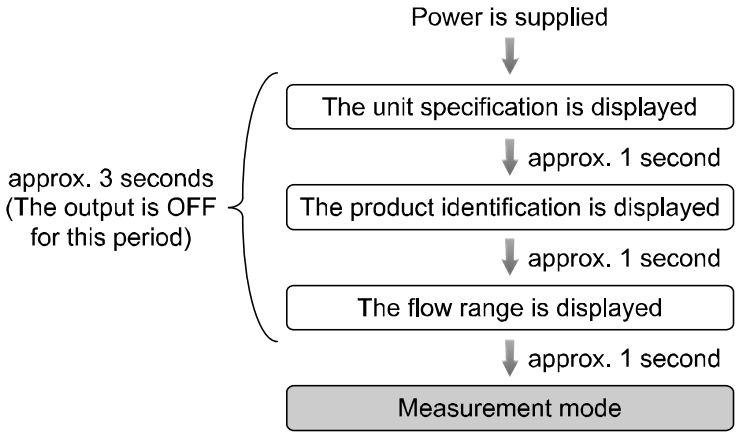

∗: The display will indicate [LLL] if a sensor is not connected.

Select the connected sensor in Function Selection mode.

Switch operation

When the flow exceeds the set value, the switch will turn ON.
When the flow falls below the set value by the amount of hysteresis or more, the switch will turn OFF.
If this condition, shown to the right, is acceptable, then keep these settings.

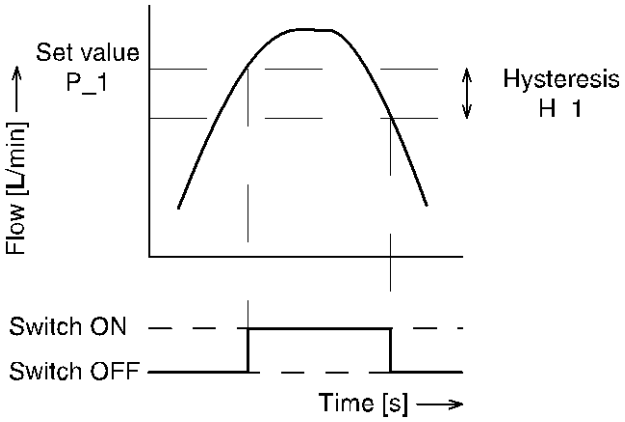

<Operation> ∗: The Product outputs will continue operating during setting.

1. Press the SET button in measurement mode to display the set values.

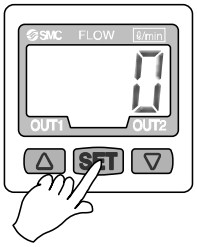

[P_1] or [n_1] and the set value are displayed in turn.

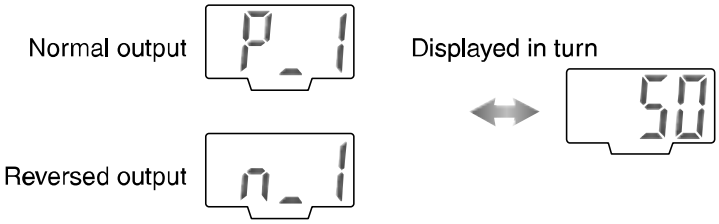

∗: [LLL] is displayed during measurement mode when the sensor is not connected.

2. Press the △ or ▽ button to change the set value.
   The △ button is to increase and the ▽ button is to decrease the set value.

   •Press the △ button once to increase by one digit, or press it continuously to keep increasing the set value.

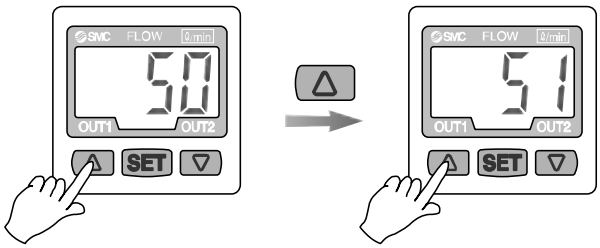

   •Press the ▽ button once to decrease by one digit, or press it continuously to keep decreasing the set value.

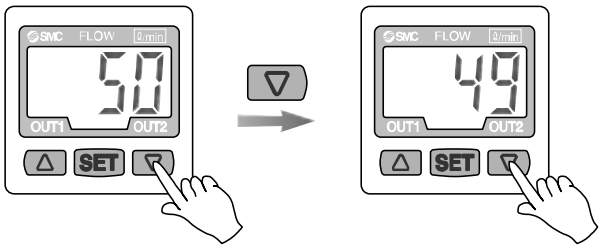

3. Press the SET button to complete the setting of OUT1.
   [P_2] or [n_2] will be displayed. Set as above.

Zero clear of Display
The display is reset to zero when the △ and ▽ buttons are pressed simultaneously for 1 second. (page 45)
For the initial operation, always perform zero clear with no flow applied.

Function Setting

Function selection mode

In measurement mode, press the SET button for 2 seconds or longer, to display [F 0].
The [F□□] indicates the mode for changing each Function Setting.
Press the SET button for 2 seconds or longer in function selection mode to return to measurement mode.

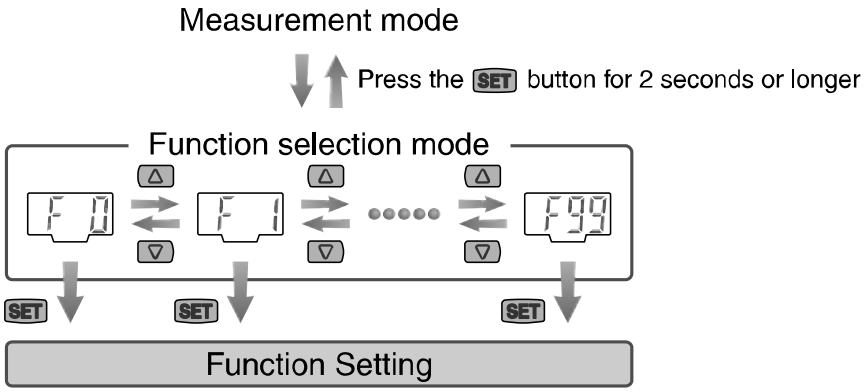

■Default settings

Item		Default setting	Page
[F 0]	Selection of connected sensor	[10] 10 [L/min] (PFM510)	Page 22
	[Uni] Unit selection function	[L] L/min	
[F 1]	[oU1] Output mode (OUT1)	[HYS] Hysteresis mode	Page 24
	[1ot] Reversed output (OUT1)	[1_P] Normal output	
	[P_1] Input of set value (OUT1)	[ ] 50% of maximums rated flow 5.0 [L/min] (PFM510)	Page 25
	[H_1] Setting of hysteresis (OUT1)	[ ] 3% of maximums rated flow 0.3 [L/min] (PFM510)	
	[CoL] Display colour	[SoG] ON: Green OFF: Red	
[F 2]	[oU2] Output mode (OUT2)	[HYS] Hysteresis mode	Page 27
	[2ot] Reversed output (OUT2)	[2_P] Normal output	
	[P_2] Input of set value (OUT2)	[ ] 50% of maximums rated flow 5.0 [L/min] (PFM510)	
	[H_2] Setting of hysteresis (OUT2)	[ ] 3% of maximums rated flow 0.3 [L/min] (PFM510)	
[F 3]	[FLU] Operating fluid	[Air] dry air, N_2	Page 28
[F 4]	[rEF] Reference condition	[Anr] Standard condition	Page 29
[F 5]	[eES] Response time	[1.00] 1 second	Page 30
[F 6]	[dSP] Display mode	[inS] Instantaneous flow	Page 31
[F 7]	[inP] External input	[r_r] Accumulated flow external reset	Page 32
[F 8]	[drE] Display resolution	[1E2] 100-split	Page 35
[F 9]	[PrS] Auto-preset	[oFF] Manual	Page 36
[F10]	[EEP] Accumulated value hold	[oFF] OFF	Page 38
[F11]	[AFL] Analogue output filter	[on] With filter	Page 39
[F12]	[Eco] Power saving mode	[oFF] Unused	Page 40
[F13]	[Pin] Security code	[oFF] Unused	Page 41
[F98]	[ALL] Setting of all functions	[oFF] Unused	Page 42
[F99]	[ini] Reset to the default settings	[oFF] Unused	Page 44

■[F 0] Selection of connected sensor • Unit selection function

- Selection of connected sensor
  The sensor to be connected must be selected before using the product.
  If the connected sensor is changed, the accumulated flow value (set value), peak/bottom display value and the zero clear adjustment value will all return to the default setting.
- Unit selection function
  This function is only available for products with the unit selection function.
  L/min or CFM (ft^3/min) x 10^{-2} is selectable for the displayed units.

∗: When the products other than unit selection type are used, this function is not displayed.

<Operation>
Press the △ or ▽ button in function selection mode to display [F 0].

Press the SET button.

Select connected sensor
Press the △ or ▽ button to select.

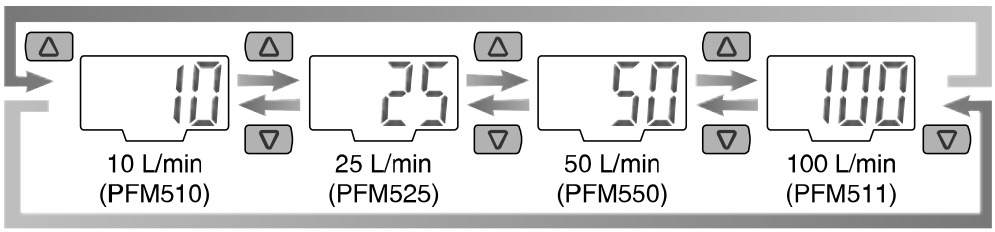

Press the SET button.

Unit selection function
[Uni] and the set value are displayed in turn.
Press the △ or ▽ button to select.

Displayed in turn

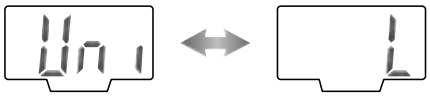

Unit selection function — Set value

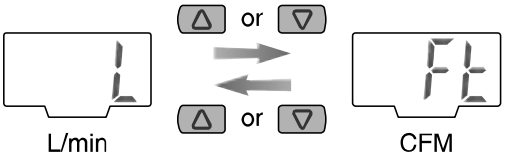

L/min — CFM (ft^3/min) x 10^{-2}

Press the SET button. Return to function selection mode.

Setting of [F 0] Unit selection function completed

Flow specification when [Ft] is selected by unit selection function

Model			PFM710	PFM725	PFM750	PFM711
Rated flow range		Dry air, N_2, Ar	0.8 to 35.3 CFM x 10^{-2}	1.8 to 88.3 CFM x 10^{-2}	4 to 177 CFM x 10^{-2}	8 to 353 CFM x 10^{-2}
		CO_2	0.8 to 17.6 CFM x 10^{-2}	1.8 to 44.1 CFM x 10^{-2}	4 to 88 CFM x 10^{-2}	8 to 176 CFM x 10^{-2}
Instantaneous flow	Setting/Display flow range	Dry air, N_2、Ar	0.8 to 37.1 CFM x 10^{-2}	1.8 to 92.7 CFM x 10^{-2}	4 to 186 CFM x 10^{-2}	8 to 371 CFM x 10^{-2}
		CO_2	0.8 to 18.5 CFM x 10^{-2}	1.8 to 46.3 CFM x 10^{-2}	4 to 93 CFM x 10^{-2}	8 to 185 CFM x 10^{-2}
	Min. setting/display unit		0.1 CFM x 10^{-2}	0.1 CFM x 10^{-2}	1 CFM x 10^{-2}	1 CFM x 10^{-2}
Accumulated flow	Setting/Display flow range		0.0 to 99999.0 ft^3 x 10^{-1}	0.0 to 99999.9 ft^3 x 10^{-1}	0 to 999999 ft^3 x 10^{-1}	0 to 999999 ft^3 x 10^{-1}
	Min. setting/display unit		0.1 ft^3 x 10^{-1}	0.1 ft^3 x 10^{-1}	1 ft^3 x 10^{-1}	1 ft^3 x 10^{-1}
Conversion of accumulated pulse			0.1 ft^3 x 10^{-1}/pulse	1 ft^3 x 10^{-1}/pulse	1 ft^3 x 10^{-1}/pulse	1 ft^3 x 10^{-1}/pulse

∗: Flow rate in the specification is the value at standard condition.
If the display unit standard is changed from standard to normal, use the conversion formula.
Flow rate at standard condition x 0.927 = Flow rate at normal condition

■[F 1] Setting of OUT1

Set output method of OUT1.

<Operation>

Press the △ or ▽ button in function selection mode to display [F 1].

Press the SET button.

Select output mode

[oU1] and the set value are displayed in turn.
Press the △ or ▽ button to select.

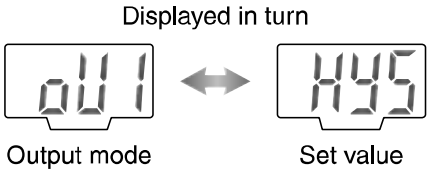

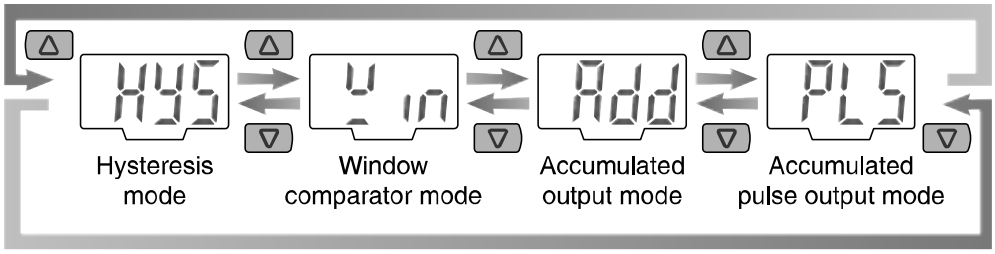

Press the SET button.

Select reversed output

[1ot] and the set value are displayed in turn.
Press the △ or ▽ button to select.

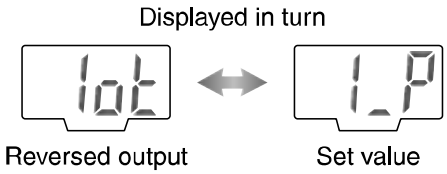

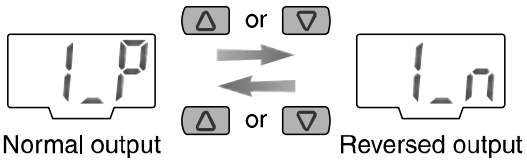

Press the SET button. (continued)

Input of set values

Set flow based on setting operation on page 20.

Hysteresis mode: [P_1]
Window comparator mode: [P1L] [P1H]
Accumulated output mode: [P1.1] [P1.2] ([P1.1]…Upper 3 digits, [P1.2]…lower 3 digits)
Accumulated pulse output mode: Omitted

∗: For reversed output, P becomes n.

Press the SET button.

Setting of hysteresis

[H_1] and the set value are displayed in turn.
Press the △ or ▽ button to input.

Displayed in turn

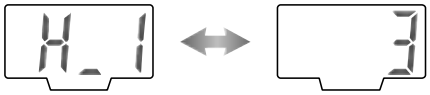

Hysteresis　　Set value

This process is omitted for accumulated output mode, accumulated pulse output mode.

Press the SET button.

Select display colour

[CoL] and the set value are displayed in turn.
Press the △ or ▽ button to select.

Displayed in turn

Display colour　　Set value

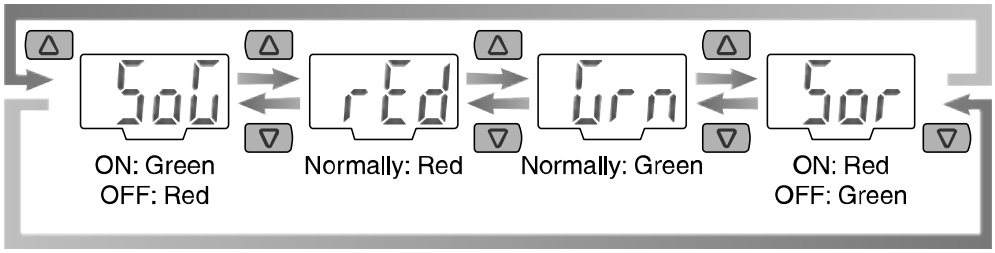

Press the SET button. Return to function selection mode.

[F 1] Setting of OUT1 completed

●List of output modes

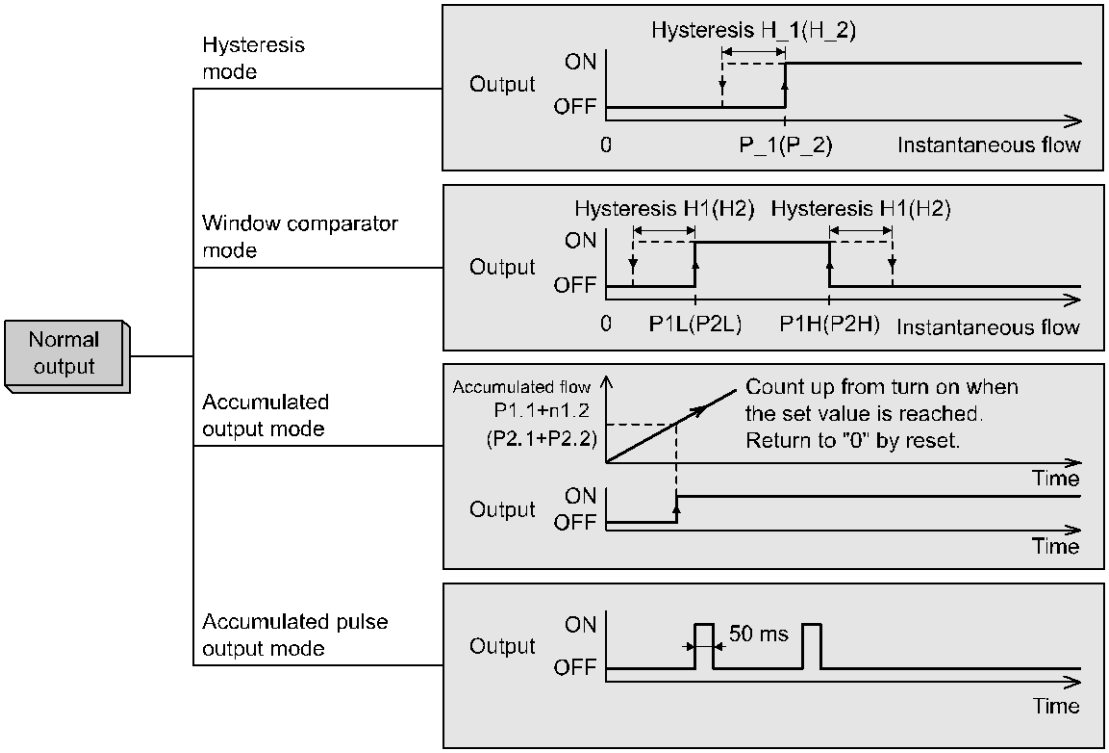

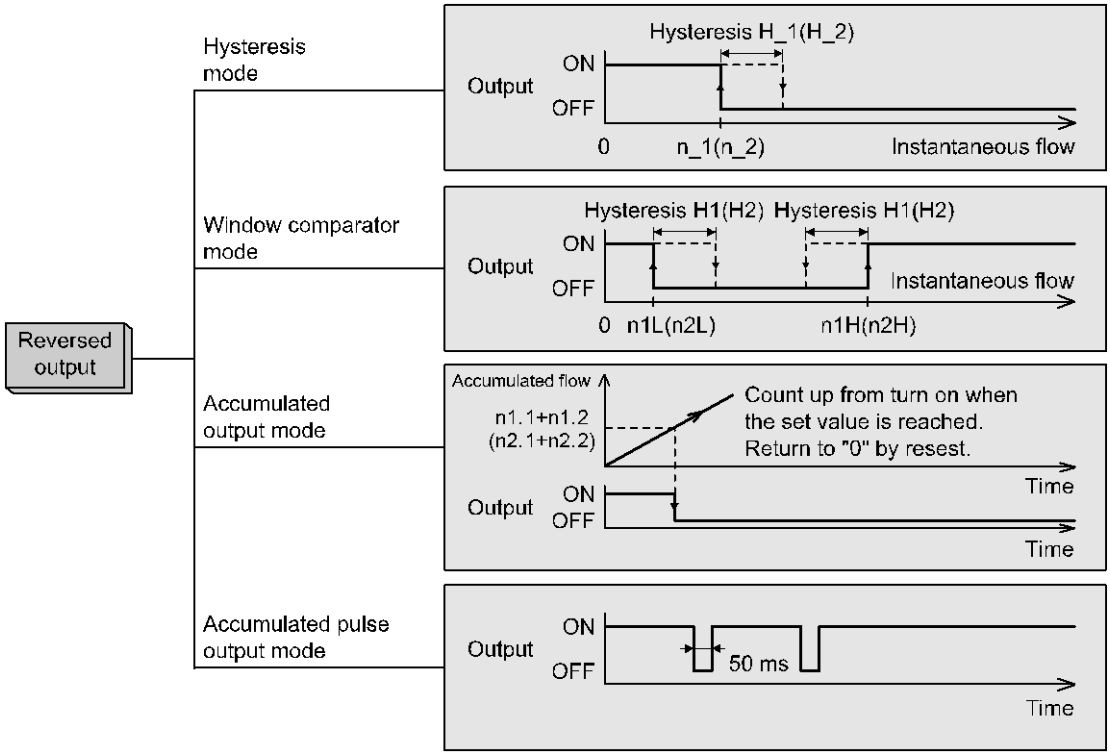

∗: If hysteresis or window comparator mode is selected and there is an unstable flow condition (due to fluid pulsation, for example), unstable output operation can result.
In such situations, keep sufficient margin between the set values and confirm that the output operation stabilizes.

■[F 2] Setting of OUT2

Set output method of OUT2.
The display colour is linked to the setting of OUT1, and can not be set for OUT2.

<Operation>
Press the △ or ▽ button in function selection mode to display [F 2].

Press the SET button.

Set [F 2] based on [F 1] setting of OUT1

∗: When product with analogue output function or external input function are used, this function is not available and [---] is displayed.
∗: The part displayed as "1" for OUT1 setting is displayed as "2" for OUT2 setting.
<Ex.>P_1→P_2, H_1→H_2

■[F 3] Operating fluid

In the default setting, the PFM is intended for use with dry air or N_2.
It is necessary to change the setting when Argon (Ar) or carbon dioxide (CO_2) are used.

∗: When CO_2 is selected, the upper limit of measurement flow range is half that of other fluids.

<Operation>

Press the △ or ▽ button in function selection mode to display [F 3].

Press the SET button. ↓

Select operating fluid

[FLU] and the set value are displayed in turn
Press the △ or ▽ button to select.

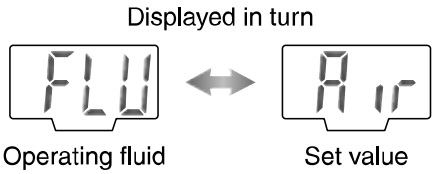

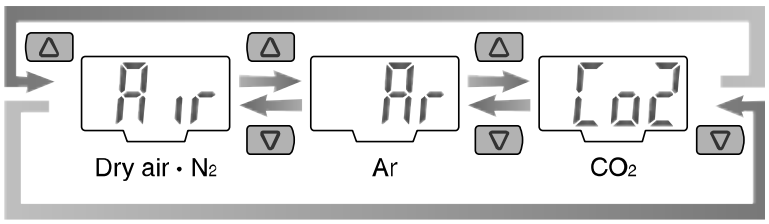

Press the SET button. ↓ Return to function selection mode.

[F 3] Selection of operating fluid completed

■[F 4] Reference condition

Standard condition or normal condition can be selected.
Standard condition (ANR) and normal condition (NOR) are defined as follows:

- •Standard condition (ANR): 101.3kPa, 20°C, 65%RH.
- •Normal condition (NOR): 101.3kPa, 0°C

<Operation>

Press the △ or ▽ button in function selection mode to display [F 4].

Press the SET button. ↓

Select reference condition

[rEF] and the set value are displayed in turn
Press the △ or ▽ button to select.

Displayed in turn

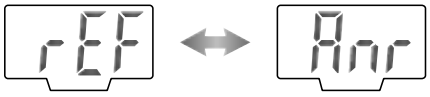

Reference condition　　Set value

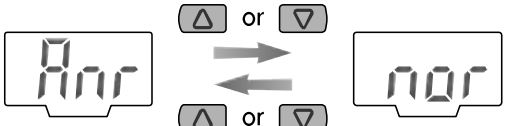

Standard conditon　　Normal condition

∗: Flow rate in the specification is the value at standard condition.
If the display unit standard is changed from standard to normal, use the conversion formula.
Flow rate at standard condition x 0.927 = Flow rate at normal condition

Press the SET button. ↓ Return to function selection mode.

[F 4] Selection of reference condition completed

■[F 5] Response time

Select the response time of the switch output.
Output chattering can be prevented by setting the response time.

<Operation>
Press the △ or ▽ button in function selection mode to display [F 5].

Press the SET button.

Select response time
[rES] and the set value are displayed in turn.
Press the △ or ▽ button to select.

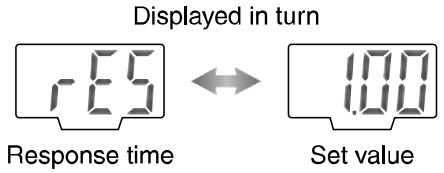

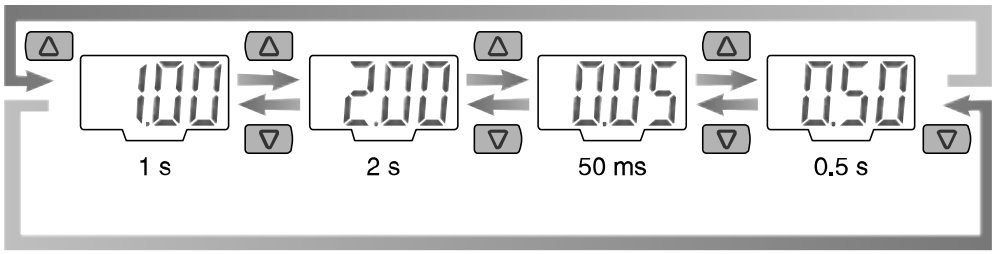

Press the SET button. Return to function selection mode.

[F 5] Selection of response time completed

■[F 6] Display mode

Select instantaneous flow or accumulated flow to be displayed.

<Operation>

Press the △ or ▽ button in function selection mode to display [F 6].

Press the SET button.

Select display mode

[dSP] and the set value are displayed in turn.

Press the △ or ▽ button to select.

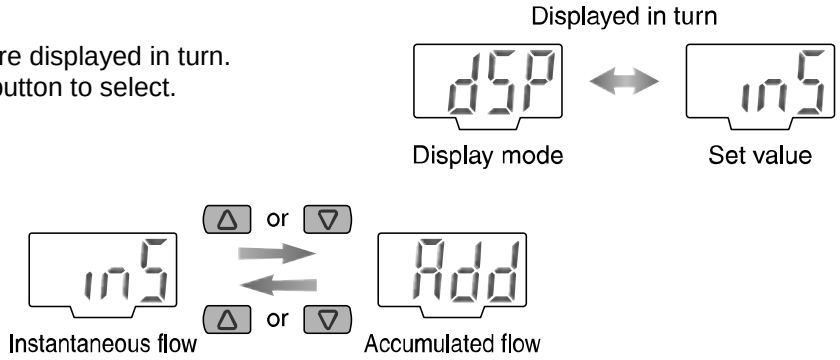

Press the SET button. Return to function selection mode.

[F 6] Selection of display mode completed

- Accumulated flow measurement starts when the accumulated flow display is selected.
- Although the accumulated flow value is measured up to 999999 L, normally only the lower 3 digits are displayed.
  Press and hold the SET button to display the upper 3 digits.
- Press the △ or ▽ buttons for 1 second or longer to reset the accumulated flow value.

■[F 7] External input

This function is available when the product includes the external input function
In the default setting, when an input signal is applied, the accumulated flow value is reset to "0".

∗: When using a product without external input function, [---] is displayed and this function cannot be set.

- •Accumulated flow external reset: Function to reset the accumulated flow value to "0" when an external signal is input
- •Auto-shift: Function where the switch output state is determined by the change in instantaneous flow rate, relative to a reference value set when an external signal is input.
- •Auto-shift zero: The same as the auto-shift function, but in addition the display is also set to zero when the external signal is input, and therefore the display shows the change of instantaneous flow from the reference value.

∗: Negative values of flow display and set value are indicated by the leftmost decimal point.

Input signal: Connect the input wire to GND for 30 ms or longer.

<Operation>
Press the △ or ▽ button in function selection mode to display [F 7].

Press the SET button.

Select external input
[inP] and the set value are displayed in turn.
Press the △ or ▽ button to select.

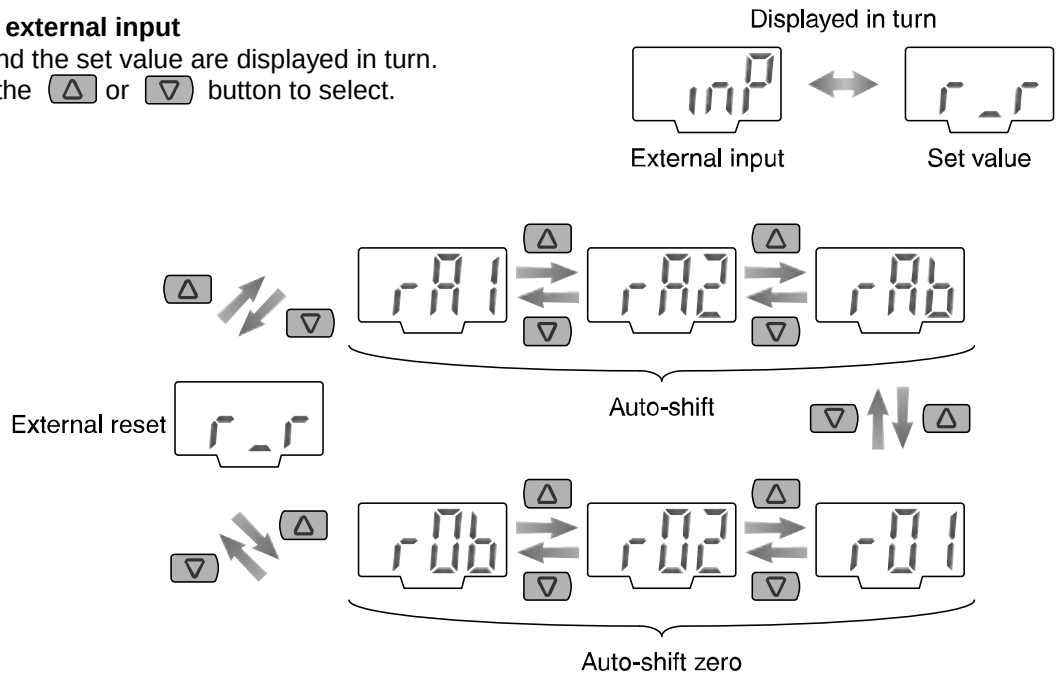

[rA1] or [r01]: Only OUT1 is valid
[rA2] or [r02]: Only OUT2 is valid
[rAb] or [r0b]: Both OUT1, OUT2 are valid

Press the SET button. Return to function selection mode.

[F 7] Selection of external input completed

∗: Please confirm the set value of [F 1] and [F 2] again, after changing the external input setting.

●External input-Auto shift, auto shift zero function

Auto-shift and auto-shift zero are functions in which the output and display operate according to the amount of change in the instantaneous flow rate from a reference value set when an external input signal is applied. If auto-shift zero is set, the display value is set to zero when the external signal is input.

See Operation example below.

<E.g.>This function is used during the confirmation of adsorption/release when there are flow rate changes due to source pressure fluctuation or nozzle diameter changes. If there is flow rate variation during adsorption/release and the auto-shift function is not used, then the output will not switch correctly. When the auto-shift function is used, the operation of the switch output is based on the flow rate at the time when auto-shift input is applied. Therefore, reliable output switching will be achieved as long as the auto-shift input is applied during the non-adsorption period.

•When auto-shift in not used

Product: PFM510 + PFM3 switch set value: n_1=1.6, H_1=0.4 (reversed output, hysteresis mode)

ON/OFF point at these settings …•ON point: n_1 •OFF point: (n_1) + (H_1)

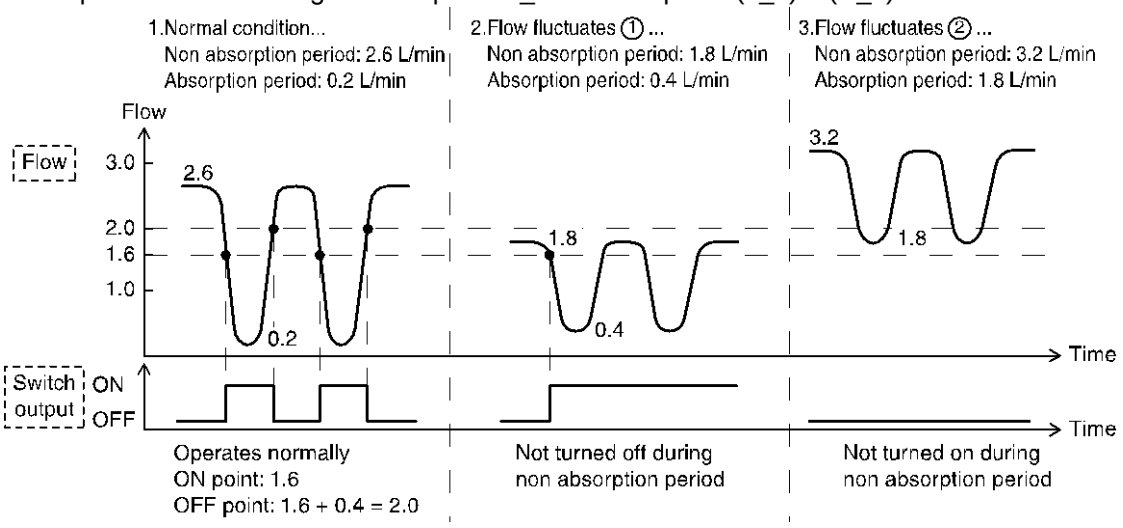

•When auto-shift is used

Product: PFM510 + PFM3 switch set value: n_1=−1.0, H_1=0.4 (reversed output, hysteresis mode)

ON/OFF point at these settings …•ON point: (Flow when auto-shift is input) + (n_1)

•OFF point: (Flow when auto-shift is input) + (n_1) + (H_1)

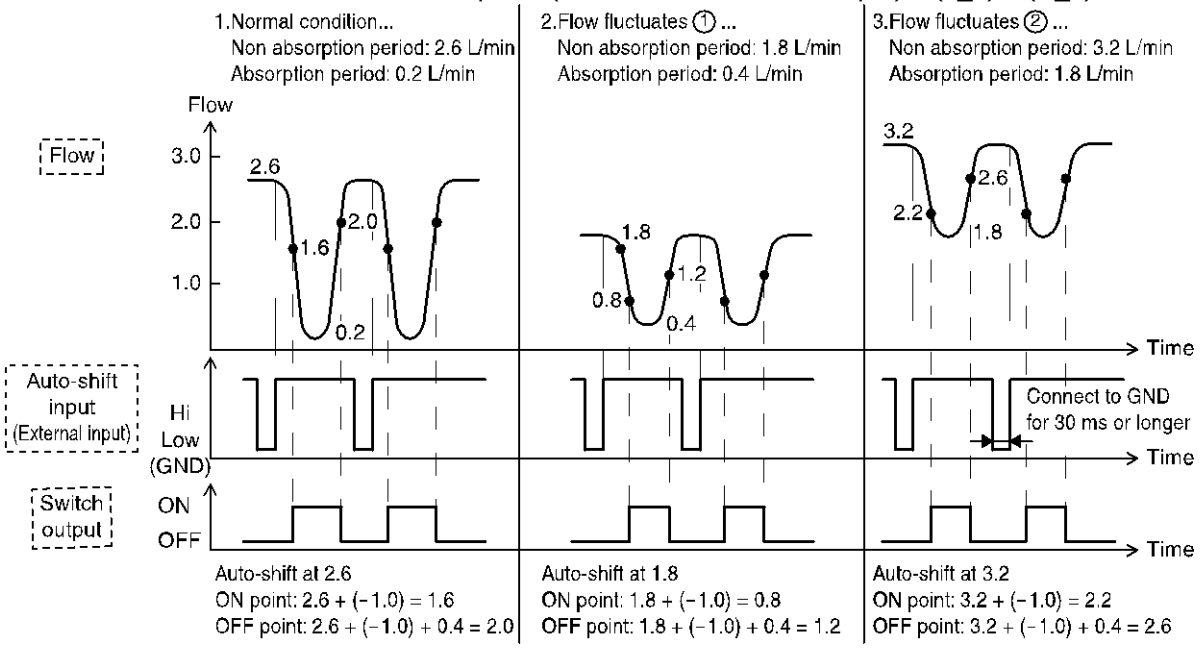

The table below shows an example of the flow displayed when auto-shift zero is selected.
Here, a typical condition is used as an example

•Operation example: Flow display before/after auto-shift zero at normal condition

	Flow display [L/min]							
Before auto-shift	0	1.0	2.6	3.0	···	8.0	9.0	10.0
Input auto-shift at 2.6	↓	↓	↓	↓		↓	↓	↓
After auto-shift	.2.6 *	.1.6 *	0	0.4	···	5.4	6.4	7.4

*: When the flow value is negative, the left most decimal point indicates the presence of "-".

Set flow range when auto-shift or auto-shift zero is selected is as follows.

•Set flow range when auto-shift or auto-shift zero is selected

Model No.	PFM510	PFM525	PFM550	PFM511
Set flow range	-10.5 to 10.5 L/min	-26.3 to 26.3 L/min	-52.5 to 52.5 L/min	-105 to 105 L/min

■[F 8] Display resolution

This function is only available for the 10 and 100 L/min types.
The minimum setting unit can be changed by selecting the display resolution.
In the default settings, the resolution of the 100 L/min type is 1 L/min, and the 10 L/min type is 0.1 L/min.

∗: When a product other than the 10 L/min type and 100 L/min are used, [---] is displayed and this Function Setting is not available.

∗: This function cannot be used when CFM has been selected by the unit selection function, [---] is displayed.

<Operation>

Press the △ or ▽ button at function selection mode to display [F 8].

Press the SET button.

Select display resolution

[drE] and the set value are displayed in turn.
Press the △ or ▽ button to select.

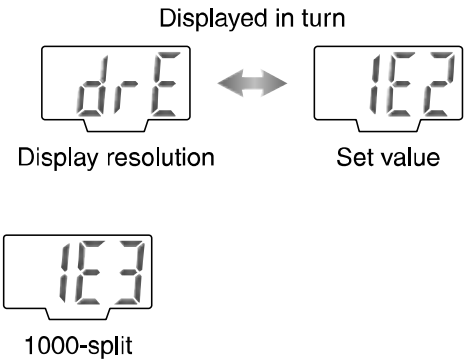

Press the SET button. Return to function selection mode.

[F 8] Selection of display resolution completed

■[F 9] Auto-preset

This function is capable of calculating the approximate set value automatically based on the on-going operation. (OUT1 only)

<Operation>

Press the △ or ▽ button in function selection mode to display [F 9].

Press the SET button.

Select auto-preset

[PrS] and the set value are displayed in turn.
Press the △ or ▽ button to select.

Displayed in turn

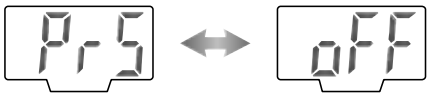

Auto pre-set　　Set value

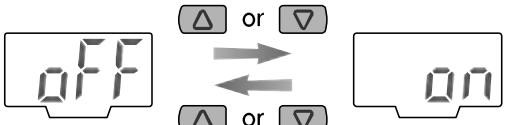

Manual　　Automatic

Press the SET button. Return to function selection mode.

[F 9] Selection of auto-preset completed

Press the button during measurement mode to display [APH].
([APW] for window comparator mode)
Press the button again, and change the flow rate while the display is flashing.

Hysteresis mode

Window comparator mode

The set value is automatically calculated by pressing the SET button. The display will return to measurement mode.
Once setting is performed, auto-preset mode is turned off. It is then possible to confirm the set value by pressing the SET button and perform fine adjustment of the set value.

●In auto-preset mode, the set value can be automatically calculated and stored.

Auto-preset is a function to automatically calculate the approximate set values according to the actual operating condition.

If the SET button is pressed during measurement mode after auto-preset function is selected, the display will appear as shown in the table below.

●Display during auto preset

Output mode	Normal output		Reversed output	
	Hysteresis Mode	Window comparator mode	Hysteresis Mode	Window comparator mode
Display during auto-preset	APH	APY	AnH	AnY

The Display flashes when the Ⓢ button is pressed. The flow should be changed while the display is flashing.

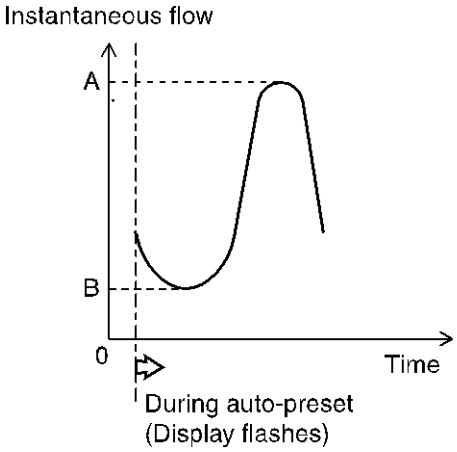

A: Max. flow during auto-preset mode
B: Min. flow during auto-preset mode

The set value is automatically calculated by pressing the SET button. Then, auto-preset mode setting is completed and the display will return to measurement mode.

The set values of auto-preset mode are calculated as follows

●Auto-preset set value

	Hysteresis Mode	Window comparator mode
Set value	•P_1=A-(A-B)/4 •H_1=(A-B)/2 (n_1=B+ $\frac{A-B}{4}$ in reversed output mode)	•P1L=B •P1H=A •H_1=5 digit 1 digit means the minimum set unit (In reversed output, P1L, P1H becomes n1L, n1H respectively)

Refer to the list of output operations (page 26) for the setting of hysteresis mode and window comparator mode.

■[F10] Accumulated value hold

The default setting is to clear the accumulated flow value when the power supply is turned off.
This function enables the accumulated flow value to be stored in permanent memory every 2 or 5 minutes.
The maximum writable limit of the memory device is 1 million cycles, which should be taken into consideration.
For example, if the product is operated 24 hours per day, the life will be as follows:

- Data stored every 5 minutes: 5 minutes x 1 million cycles = 5 million minutes = 9.5 years
- Data stored every 2 minutes: 2 minutes x 1 million cycles = 2 million minutes = 3.8 years

<Operation>

Press the △ or ▽ button in function selection mode to display [F10].

Press the SET button.

Select Accumulated value hold
[EEP] and the set value are displayed in turn.
Press the △ or ▽ button to select.

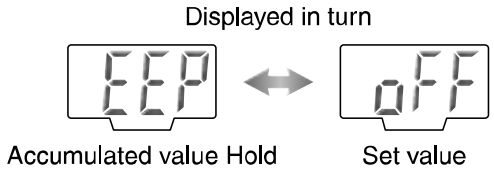

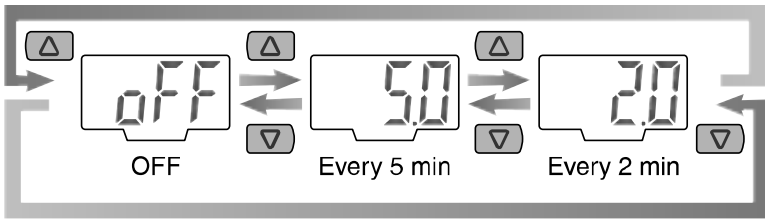

Press the SET button. Return to function selection mode.

[F10] Selection of Accumulated value hold completed

∗: When accumulated flow external reset is repeatedly input, wait for a time longer than the time required to store the value.

■[F11] Analogue output filter

This function can only be used on products with the analogue output function.
The response time of the analogue output can be changed by turning off the the analogue output filter.
With the filter turned off, a faster response can be obtained.

∗: When using a product without analogue output function, [---] is displayed and this function is not available.

<Operation>

Press the △ or ▽ button in function selection mode to display [F11].

Press the SET button. ↓

Select Analogue output filter
[AFL] and the set value are displayed in turn.
Press the △ or ▽ button to select.

Displayed in turn

Analogue output filter　　Set value

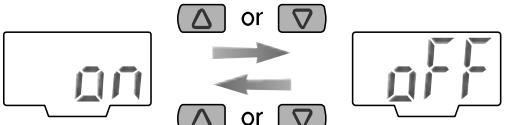

With filter (Response time 1.5 s)　　Without filter (Response time 100 ms)

Press the SET button. ↓ Return to function selection mode.

[F11] Selection of Analogue output filter completed

■[F12] Power saving mode

In power saving mode, the display can be turned off to reduce power consumption.
When the product is left for 30 seconds with no button operations, it will enter power saving mode.
The decimal point flashes during operation.

<Operation>
Press the △ or ▽ button in function selection mode to display [F12].

Press the SET button.

Select power saving mode
[ECo] and the set value are displayed in turn.
Press the △ or ▽ button to select.

Displayed in turn

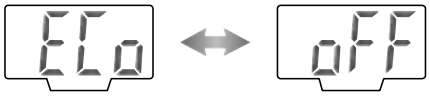

Power saving mode　　Set value

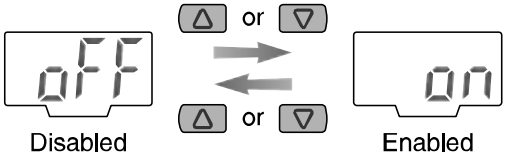

△ or ▽

△ or ▽

Disabled　　Enabled

Press the SET button. Return to function selection mode.

[F12] selection of power saving mode completed

In power saving mode, any key operation will return the normal display
If there is no key operations for 30 seconds, the display will return to power saving mode.
(only in the measurement mode.)

During power saving mode,
only the decimal points will flash.

■[F13] Security code

A security code can be selected, which must be entered to unlock the keys when the keys are locked.
Refer to key-lock function (page 46).

<Operation>

Press the △ or ▽ button in function selection mode to display [F13].

Press the SET button.

Select security code

[Pin] and the set value are displayed in turn.
Press the △ or ▽ button to select.

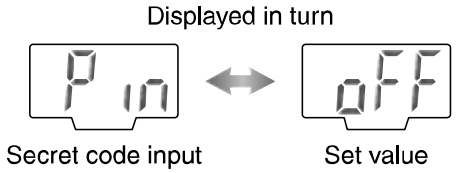

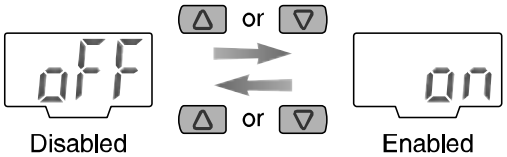

Press the SET button. Return to function selection mode.

[F13] Selection of security code completed

■[F98] Setting of all functions

All functions can be set one after the other, without having to select each one separately from the function selection mode.

<Operation>

Press the △ or ▽ button in function selection mode to display [F98].

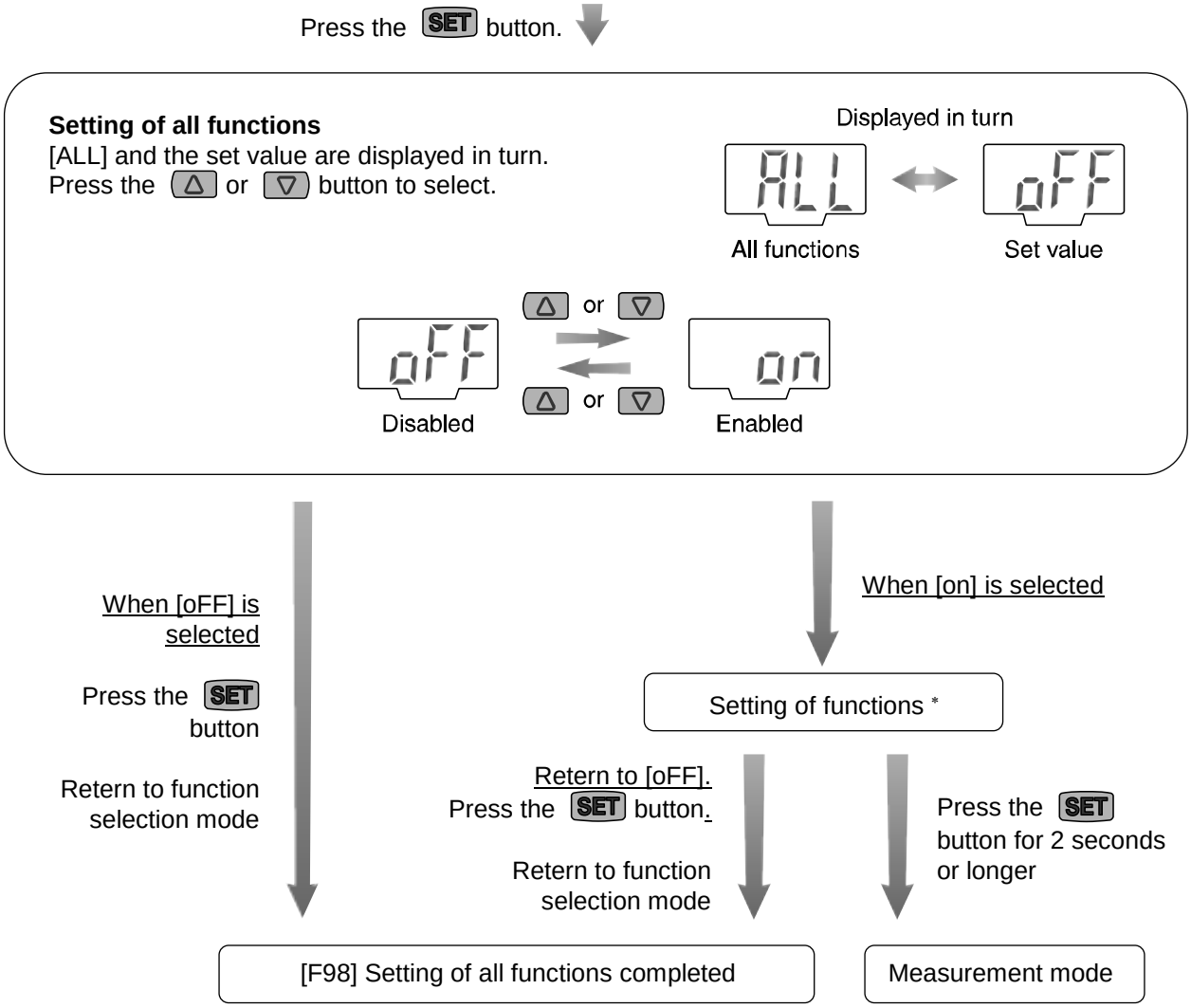

*: Setting of functions

Every time the Ⓢ button is pressed, the next function is displayed in order (refer to the following table).

Set by using the △ or ▽ buttons.

Refer to each paragraph for the setting details.

Order of Function Setting

Order	Function	Applicable model
1	Selection of connected sensor	All models
2	Unit selection function	Models with unit selection function
3	Output mode (OUT1)	All models
4	Reversed output (OUT1)	All models
5	Input of set value (OUT1)	All models
6	Setting of hysteresis (OUT1)	All models
7	Display colour	All models
8	Selection of output mode (OUT2)	Models with 2 x NPN output, 2 x PNP output
9	Output mode (OUT2)	
10	Reversed output (OUT2)	
11	Input of set value (OUT2)	
12	Setting of hysteresis (OUT2)	
13	Operating fluid	All models
14	Reference condition	All models
15	Response time	All models
16	Display mode	All models
17	External input	Models with external input
18	Display resolution	10 or 100 [L/min] models
19	Auto-preset	All models
20	Accumulated value Hold	All models
21	Analogue output filter	Models with analogue output
22	Power saving mode	All models
23	Security code	All models

■[F99] Reset to the default settings

The factory default settings can be restored.

<Operation>

Press the △ or ▽ button in function selection mode to display [F99].

Press the SET button.

Reset to the default settings

[ini] and the set value are displayed in turn.

Press the △ or ▽ button to select.

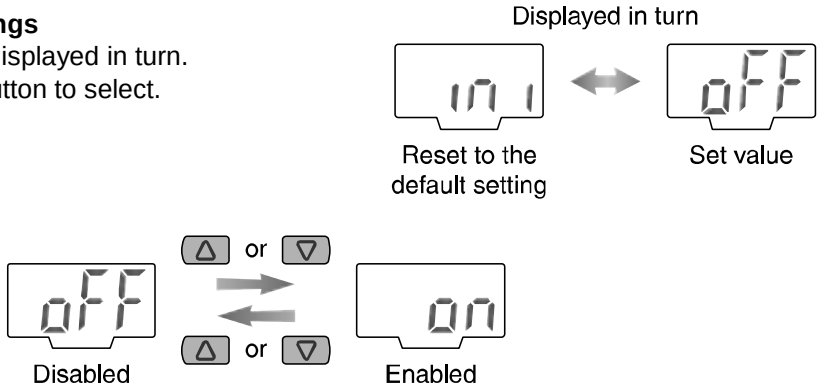

Press the SET and ▽ buttons simultaneously for 5 seconds or longer when [on] is displayed.

Return to function selection mode.

[F99] Reset to the default settings completed

Other Settings

●Peak/Bottom value display

The maximum (minimum) instantaneous flow, from when the power was supplied to this moment, is detected and updated.
In the peak/(bottom) value display mode, the maximum (minimum) instantaneous flow can be displayed.
For peak value display mode, when the △ button is pressed for 1 second or longer, the maximum flow will be displayed flashing, and is held.
To release holding the peak value display, press the △ button for 1 second or longer to return to measurement mode.
For bottom value display mode, when the ▽ button is pressed for 1 second or longer, the minimum flow will be displayed flashing, and is held.
To release holding the bottom value display, press the ▽ button for 1 second or longer to return to measurement mode.
If the △ and ▽ buttons are pressed simultaneously for 1 second or longer while the flow is being held, the peak (bottom) value is reset.

●Zero Clear

The displayed value can be adjusted to "0" when the measured flow is within ±10%F.S. of the zero point at the time of shipment from the factory.
(A tolerance of ±1 digit may apply due to individual product differences)
Press the △ and ▽ buttons simultaneously for 1 second or longer, to clear the display to "0".
The display will return to measurement mode automatically.
The accumulated value is "0" when accumulated flow is displayed.

●Key-lock function

The key lock function is used to prevent errors occurring due to unintentional changes of the set values. If a button operation is performed while the key lock setting is ON [LoC] is displayed for approximately 1 second.

<Operation-Without security code input->

•Locking

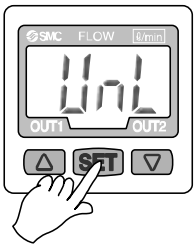

1. Press the SET button for 5 seconds or longer in the measurement mode. [UnL] will be displayed.

2. Press the △ or ▽ button to select keys lock [LoC].

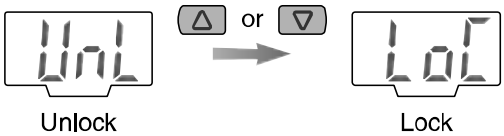

3. Press the SET button to store the setting and return to measurement mode.

•Unlocking

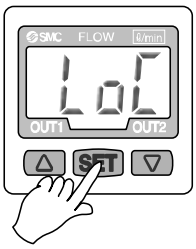

1. Press the SET button for 5 seconds or longer in the measurement mode. [LoC] will be displayed.

2. Press the △ or ▽ button to select keys unlock [UnL].

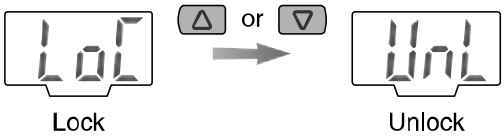

3. Press the SET button to store the setting and return to measurement mode.

<Operation -With security code input->

•Locking

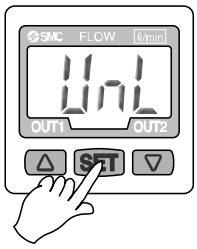

1. Press the SET button for 5 seconds or longer in the measurement mode. [UnL] will be displayed.

2. Press the △ or ▽ button to select keys lock [LoC].

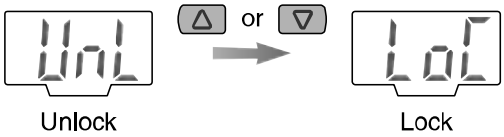

3. Press the SET button to store the setting and return to measurement mode.

•Unlocking

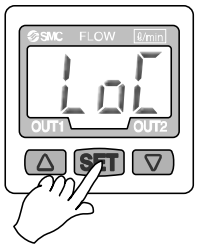

1. Press the SET button for 5 seconds or longer in measurement mode. [LoC] will be displayed.

2. Press the △ or ▽ button to select keys unlock [UnL].

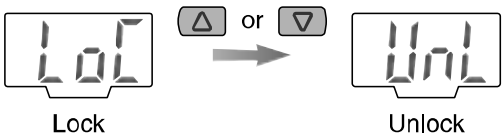

3. When the Ⓢ button is pressed, the security code must now be entered.

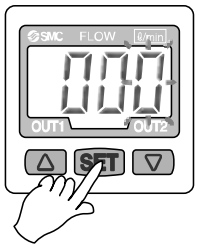

How to enter the security code

The first digit will start flashing. Press the △ or ▽ button to select a value.
Press the SET button to set, and the next digit will start flashing.
If the SET button is pressed at the last digit, the first digit will start flashing again.
After the setting is completed, press and hold the SET button for 1 second or longer.

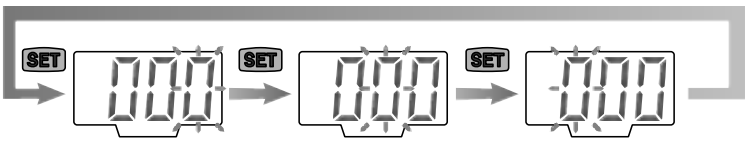

4. If the security code entered is correct, the display will change to [UnL].
   Press any of the △, SET or ▽ buttons to release the key-lock and return to measurement mode.
   If the security code entered is incorrect, [FAL] will be displayed and the security code must be entered again.
   If an incorrect security code is entered three times, [LoC] is displayed and the display will return to measurement mode.

∗: If a key operation is not performed for 30 seconds while entering the security code setting, the measurement mode will return.

●How to change the security code

At the time of shipment, the security code is set to [000], but this can be changed to any number.

<Operation>

1. Perform the key locking procedure, followed by the first 3 steps of the key unlocking procedure

2. When [UnL] is displayed, press the SET and ▽ buttons simultaneously for 5 seconds or longer.

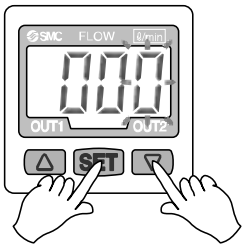

[000] is displayed and a new security code can now be entered.

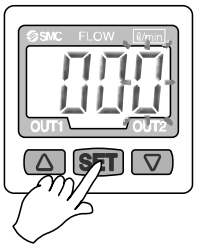

How to enter the security code

The first digit will start flashing. Press the △ or ▽ button to select a value.
Press the SET button to set, and the next digit will start flashing.
If the SET button is pressed at the last digit, the first digit will start flashing again.
After the setting is completed, press and hold the SET button for 1 second or longer.

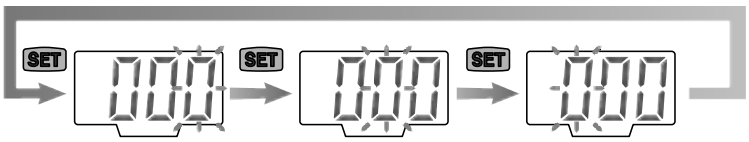

The new security code will be displayed.
At this time, if the △ or ▽ button is pressed, any security code changes are lost, and the change of security code procedure must be repeated.

3. After checking the security code is as required, press the SET button.
   The display will return to measurement mode.

Maintenance

How to reset the product after a power cut or forcible de-energizing

The setting of the product will be retained as it was before a power cut or de-energizing.
The output condition is also basically recovered to that before a power cut or de-energizing, but may change depending on the operating environment.
Therefore, check the safety of the whole installation before operating the product.

Troubleshooting

Troubleshooting
If an operation failure occurs with the product, use the chart below to find out the cause of the problem.
If none of the countermeasures seem to be applicable, or a replacement product operates normally when installed, the product may be faulty. A product can be damaged by the operating environment (system configuration etc). If the product seems to be faulty, please contact SMC.

●Faults and countermeasures

Fault	Status	Possible cause	Item to check	Countermeasure
Incorrect display	No Display	Incorrect wiring	Check that the brown and blue wires are connected to DC (+) and DC (-) respectively.	Correct the wiring.
		Connector is disconnected	Check the connectors.	Correct the connector wiring.
	Display is flashing	Peak/bottom value display mode is selected	Check if the peak value or bottom value display mode has been selected.	Refer to "Peak/bottom value display" (page 45), and remove the setting.
	Display is not stable	Foreign matter has entered the flow passage or adhered to the sensor	(1) Check if any foreign matter has entered the flow passage. (2) Check if there is foreign matter on the mesh.	Install a filter or mist separator on the IN side.
		Piping connected backwards	Check that the fluid flow is in the same direction as marked on the product body.	Ensure the product is mounted so that the fluid flow matches the direction marked on the product body.
		Flow is pulsing	Check if there is any supply pressure fluctuation or pressure pulsation due to the characteristics of the source compressor (or pump).	Install an accumulator tank to reduce the pressure fluctuation. Change the pressure source to one that has less pulsation.
	Incorrect display	Foreign matter has entered the flow passage or adhered to the sensor	(1) Check if any foreign matter has entered the flow passage. (2) Check if there is foreign matter on the mesh.	Install a filter or mist separator on the IN side.
		Piping in the reverse direction	Check that the fluid flow is in the same direction as marked on the product body.	Ensure the product is mounted so that the fluid flow matches the direction marked on the product body.
		Incorrect flow unit selected	Check the display unit selected.	Select the appropriate units.

Fault	Status	Possible cause	Item to check	Countermeasure
Incorrect display	Incorrect display	Incorrect flow range selected	Check the flow range of the model used.	Select a model with the appropriate flow range.
		Air leakage	Check for air leakage due to loose piping or insufficient sealant, etc.	Reconnect the piping with the specified tightening torque and re-apply the sealant tape.
Incorrect output	No output	Incorrect wiring	Check that the brown, blue, black and white wires are connected correctly.	Correct the wiring.
		Connector is disconnected	Check the connectors.	Correct the connector wiring.
	Output is unstable	Foreign matter has entered the flow passage or adhered to the sensor	(1) Check if any foreign matter has entered the flow passage. (2) Check if there is foreign matter on the mesh.	Install a filter or mist separator on the IN side.
		Piping in the reverse direction	Check that the fluid flow is in the same direction as marked on the product body.	Ensure the product is mounted so that the fluid flow matches the direction marked on the product body.
		Flow is pulsing	Check if there is any supply pressure fluctuation or pressure pulsation due to the characteristics of the source compressor (or pump).	Install an accumulator tank to reduce the pressure fluctuation. Change the pressure source to one that has less pulsation.
		Air leakage	Check for air leakage due to loose piping or insufficient sealant, etc.	Reconnect the piping with the specified tightening torque and re-apply the sealant tape.
		Hysteresis value too low	Check the hysteresis set value.	Increase the hysteresis set value.
Buttons not operating	No reaction when the buttons are pressed	The keys are locked	Check if [Loc] is displayed when the buttons are pressed.	Release the key-lock function. (Refer to page 46.)
External input does not operate	No reaction to the external input	Incorrect wiring	Check that the brown, blue, black and white wires are connected correctly.	Correct the wiring.
		The input signal duration is too short	Check that the white input wire is connected to GND for 30 ms or more.	For external inputs, the white wire should be connected to GND for 30 ms or more.

■Error indication

Error Name	Display	Type	Troubleshooting
Flow error	HHH	The flow has exceeded the upper limit of the display flow range.	Reduce the flow.
	LLL	There is a flow of 5% or more in the wrong direction.	Ensure the flow is in the correct direction.
		A sensor may be disconnected or incorrectly wired.	Check the connection and wiring of the sensor.
Overcurrent error	Er1	The switch output load current (OUT1) has exceeded 80 mA.	Turn off the power supply and remove the cause of the over current. Then supply the power again.
	Er2	The switch output load current (OUT2) has exceeded 80 mA.	
System error	Er0	The product has lost the factory adjustment settings. The internal circuit may be damaged.	Stop operation immediately and contact SMC.
	Er3	System error. The product has failed to store the data, or the internal circuit may be damaged.	Turn the power off and turn it on again, then repeat the Function Setting.
Zero clear error	Er4	The zero clear function has been performed while the fluid is flowing. "Er4" will be displayed for 1 second.	Perform the zero clear function again under no flow conditions.
Accumulated flow error	999 Accumulated flow displayed (flashing)	Accumulated flow range has been exceeded.	Reset the accumulated flow (pressing △ and ▽ buttons simultaneously for 1 second or more). (Refer to page 45.)

*: If the error cannot be reset after the above measures are taken, then please contact SMC.

Specification

■Specifications

Model			PFM3□□			
Applicable sensor			PFM510	PFM525	PFM550	PFM511
Rated flow range		Dry air, N_2, Ar	0.2 to 10 L/min	0.5 to 25 L/min	1 to 50 L/min	2 to 100 L/min
		CO_2	0.2 to 5 L/min	0.5 to 12.5 L/min	1 to 25 L/min	2 to 50 L/min
Instantaneous flow	Display flow range	Dry air, N_2, Ar	0.2 to 10.5 L/min *1	0.5 to 26.3 L/min	1 to 52.5 L/min	2 to 105 L/min *2
		CO_2	0.2 to 5.2 L/min	0.5 to 13.1 L/min	1 to 26.2 L/min	2 to 52 L/min
	Set flow range	Dry air, N_2, Ar	0 to 10.5 L/min *1	0 to 26.3 L/min	0 to 52.5 L/min	0 to 105 L/min *2
		CO_2	0 to 5.2 L/min	0 to 13.1 L/min	0 to 26.2 L/min	0 to 52 L/min
	Min. setting/display unit		0.01 L/min	0.1 L/min	0.1 L/min	0.1 L/min
Accumulated flow	Setting/display flow range *3		0 to 1999999 L			
	Min. setting/display unit		1 L			
Accumulated flow volume per pulse			0.1 L/Pulse	0.1 L/Pulse	0.1 L/Pulse	1 L/Pulse
Display unit			Instantaneous flow : L/min, CFM x 10^{-2} Accumulated flow : L, ft^3 x 10^{-1}			
Reference condition *4			Standard condition (ANR), Normal condition (NOR)			
Temperature characteristics			±0.5%F.S. max. (reference 25 °C)			
Switch output			NPN or PNP open collector output			
	Max. load current		80 mA			
	Max. load voltage		30 VDC (NPN output)			
	Internal voltage drop		1 V or less (80 mA load current)			
	Response time		1 s (50 ms/0.5 s/2 s are selectable)			
	Output protection		Short circuit protection			
	Output mode		Hysteresis mode, window comparator mode, Accumulated output mode, Accumulated pulse output mode			
	Hysteresis		Variable			
Repeatability			±1%F.S. max. (Fluid: Dry air) Analogue output accuracy: ±3%F.S. max.			
Analogue output	Response time		1.5 s (100 ms)			
	Voltage output		Output voltage : 1 to 5 VDC Output impedance : 1 kΩ			
	Current output		Output c urrent : 4 to 20 mA Max. load impedance: 600 Ω (24 VDC) Min. load impedance: 50 Ω			
	Accuracy		±1%F.S. max.			
Sensor input	Voltage input (PFM30□)		Voltage input: 1 to 5 VDC Input impedance: 1 MΩ			
	Current input (PFM31□)		Current input: 4 to 20 mA Input impedance: 250 Ω			

Model		PFM3□□
External input		Voltage free input (reed switch or solid state), 30 msec or more
Display accuracy		±0.5%F.S. ±1digit max.
Display		3+1/2 digits, 7 segment, dual colour display (red/green)
Indicator LED		LED is ON when output is ON OUT1: Green OUT2: Red
Supply voltage		24 VDC±10% (protected against reverse connection)
Power consumption		50 mA or less
Environment	Enclosure	IP40
	Operating temp. range	Operating: 0 to 50 ºC, Stored: -10 to 60 ºC (no freezing or condensation)
	Operating hamidity range	Operating, Stored 35 to 85%R.H. (no condensation)
	Withstand voltage	1000 VAC, 1 min. between terminals and case
	Insulation resistance	50 MΩ min. (at 500 VDC) between terminals and case
Standards		CE, UL, CSA, RoHS
Material		Front case, rear case: PBT
Weight		30 g (Lead wire not included), 85 g (Lead wire included)

∗1: If the resolution is set to 1000 for 10 L/min type, the display upper limit will be [9.99 L/min].

∗2: If the resolution is set to 1000 for 100 L/min type, the display upper limit will be [99.9 L/min].

∗3: When using the Accumulated flow hold function, calculate the product life according to the operating conditions, and use the product within its life. The limit of the number times the memory can be written to is 1 million times. If the product is operated 24 hours per day, the life will be as follows.

▪Data stored every 5 minutes: 5 minutes x 1 million cycles = 5 million minutes = 9.5 years

▪Data stored every 2 minutes: 2 minutes x 1 million cycles = 2 million minutes = 3.8 years

If the accumulated flow external reset is repeatedly input, the life will be shorter than the calculated life.

∗4: Standard condition (ANR): Flow measurement reference condition 101.3 kPa, 20 °C, 65% R.H.
Normal condition (NOR): Flow measurement reference condition 101.3 kPa, 0 °C.

Cable specifications (ZS-28-A)

Conductor	Nominal cross section area	approx. 0.2 mm^2
	Individual wire diameter	approx. 0.58 mm
Insulator	Outside diameter	approx. 1.12 mm
	Colours	Brown, Black, White, Grey, Blue
Sheath	Material	Oil-resistant vinyl chloride resin compound
	Outer diameter	approx. ϕ4.1 mm

■Characteristics data

●Analogue output characteristics

∗: Analogue output at maximum rated flow rate when CO_2 is selected is 3 [V] for the voltage output type and 12 [mA] for the current output type.

Analogue voltage output (1 to 5 V)

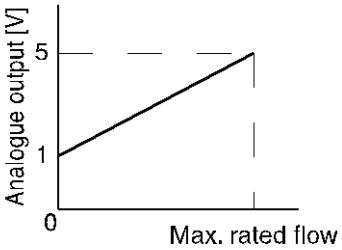

Model	Max. rated flow [L/min]
PFM510-□□-1	10 (5)
PFM525-□□-1	25 (12.5)
PFM550-□□-1	50 (25)
PFM511-□□-1	100 (50)

∗: ( ): Fluid: CO_2

Analogue current output (4 to 20 mA)

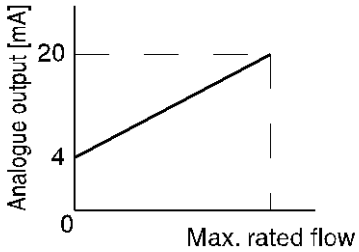

Model	Max. rated flow [L/min]
PFM510-□□-2	10 (5)
PFM525-□□-2	25 (12.5)
PFM550-□□-2	50 (25)
PFM511-□□-2	100 (50)

∗: ( ): Fluid: CO_2

■Dimensions

PFM3□□

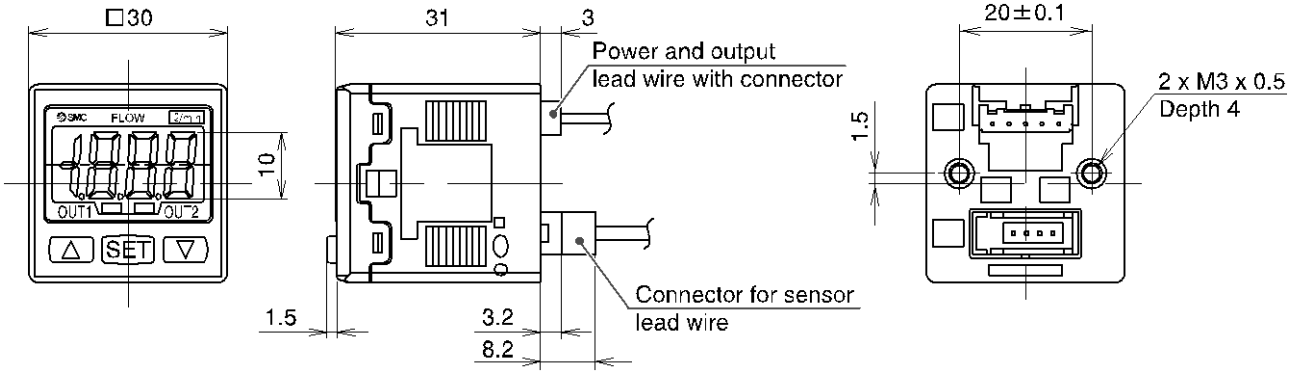

Panel cut-out dimensions　　Panel thickness: 0.5 to 6.0 mm

Individual

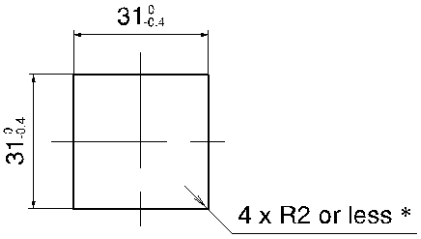

Two or more in a row (n: The number of products)

Horizontal

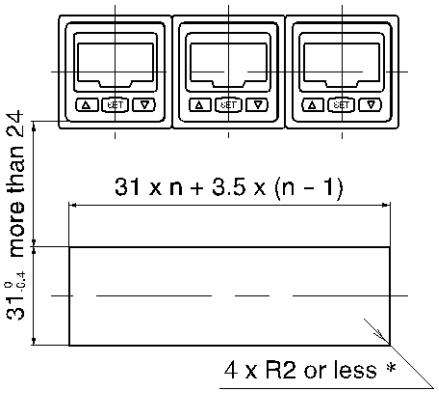

Vertical

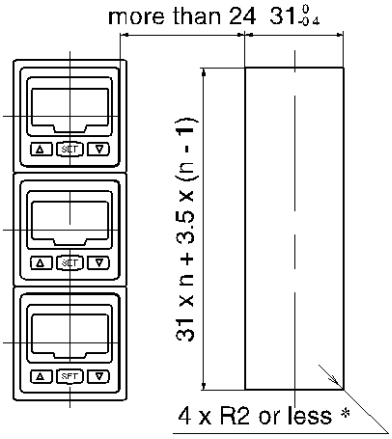

*: If a bend (R) is used, limit it to R2 or less.

Bracket (ZS-28-B)

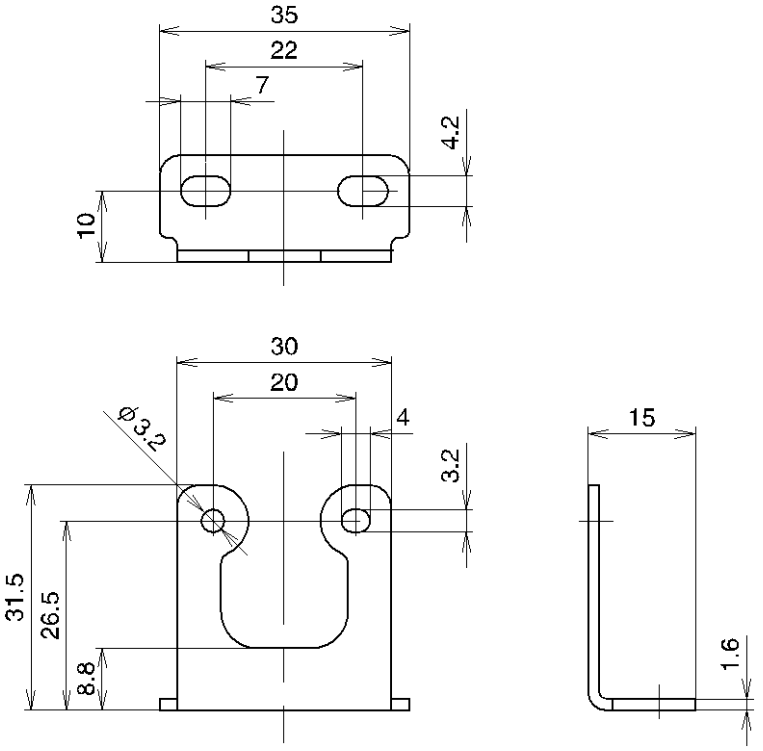

Power and output lead wire and connector (ZS-28-A)

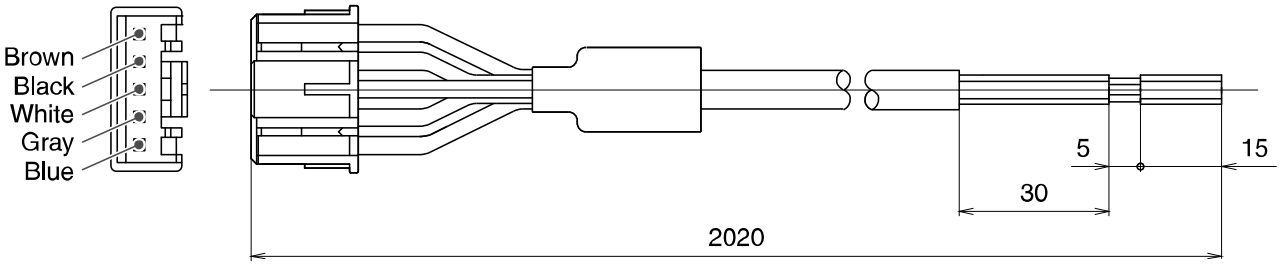

Revision history
A: Contents revised in several places. B: Contents revised in several places. C: Contents revised in several places. [September 2016] D: Contents are added. [February 2017]

SMC Corporation
4-14-1, Sotokanda, Chiyoda-ku, Tokyo 101-0021 JAPAN
Tel: + 81 3 5207 8249 Fax: +81 3 5298 5362
URL http://www.smcworld.com

Note: Specifications are subject to change without prior notice and any obligation on the part of the manufacturer.
© 2011-2017 SMC Corporation All Rights Reserved

No.PF※※-OMJ0018-D