Circulating Fluid Temperature Controller

Thermo-chiller Standard Type

New

CE (Only 400 VAC type)

RoHS

Lightweight and Compact

Cooling capacity 9 kW

Temperature stability ±0.9°F [±0.5°C] (when a load is stable)

Set temperature range 41° to 95°F [5 to 35°C]

Max. ambient temperature 113°F [45°C]

Indoor use

Weight 300 lbs [136Kg]

Water-cooled refrigeration

Air-cooled refrigeration

Compatible power supplies in Europe, Asia, Oceania, North, Central and South America

- 3-phase 200 V
- 3-phase 400 V

With heating function

Heating method using discharged heat makes a heater unnecessary.

Convenient functions Page 3

Timer operation function/Unit conversion function /Powerfailure auto-restart function /Anti-freezing operation function

Easy maintenance Page 2

Tool-less maintenance of filter

Self diagnosis function and check display Page 4

41 types of alarm codes

Communication function Page 4

Equipped with serial communication (RS232C/RS485) and contact I/Os (2 inputs and 3 outputs) as standard.

Environme tal friendly R410A as refrigerant

Series HRS090

SMC

CAT.NAS40-64A

Compact and lightweight 136 kg

The precision temperature control method by expansion valve and temperature sensor, realized high temperature stability of ±0.9°F [±0.5°C] and a small-size tank.

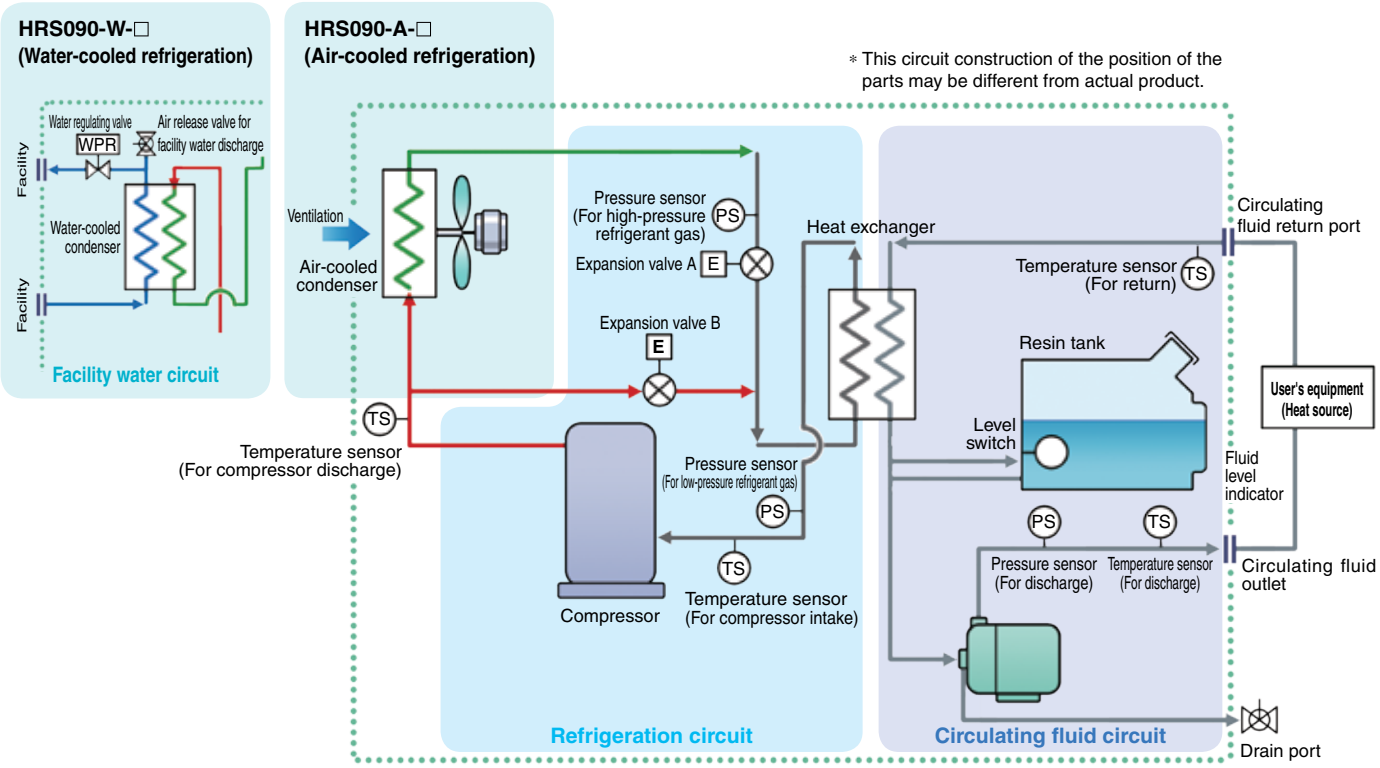

Refrigeration circuit

- The compressor compresses the refrigerant gas, and discharges the high temperature and high pressure refrigerant gas.
- In the case of air-cooled refrigeration, the high temperature and high pressure refrigerant gas is cooled down by an air-cooled condenser with the ventilation of the fan, and becomes a liquid. In the case of water-cooled refrigeration, the refrigerant gas is cooled by a water-cooled condenser with the facility water in the facility water circuit, and becomes a liquid.
- The liquefied high pressure refrigerant gas expands and its temperature lowers when it passes through expansion valve A and vaporizes by taking heat from the circulating fluid in the heat exchanger.
- The vaporized refrigerant gas is sucked into the compressor and compressed again.
- When heating the circulating fluid, the high pressure and high temperature refrigerant gas is bypassed into the evaporator by expansion valve B, to heat the circulating fluid.

Point The combination of precise control of **expansion valve A** for cooling, and **expansion valve B** for heating realized high temperature stability.

Circulating fluid circuit

- The circulating fluid discharged from the pump, is heated or cooled by the user's equipment and returns to the thermo-chiller.
- The circulating fluid is controlled to a set temperature by the refrigeration circuit, to be discharged to the user's equipment side again by the thermo-chiller.

Point Since the refrigeration circuit is controlled by the signal from **2 temperature sensors (for return and discharge)**, precise temperature control of the circulating fluid can be performed. Therefore, there is no necessity of absorbing the temperature difference in the circulating fluid with a large tank capacity, and realizes high temperature stability even with a **small-size tank**. Also, contributes to space-saving.

Facility water circuit

For water-cooled refrigeration HRS□-W-□

- The water regulating valve opens and closes to keep the refrigerant gas pressure consistent. The facility water flow rate is controlled by the water regulating valve.

Reduced-height double condenser structure

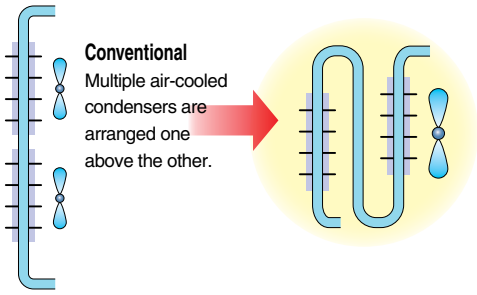

Conventional
Multiple air-cooled condensers are arranged one above the other.

Achieved a maximum reduction in the height of the product while expanding the cooling capacity, by providing overlapped air-cooled condensers.

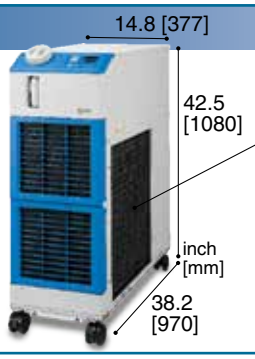

Aluminum air-cooled condenser
High heat transfer efficiency, Lightweight

Compact tank 4.8gal (18L)
Temperature followability control reduced the tank capacity required as a buffer.

With heating function

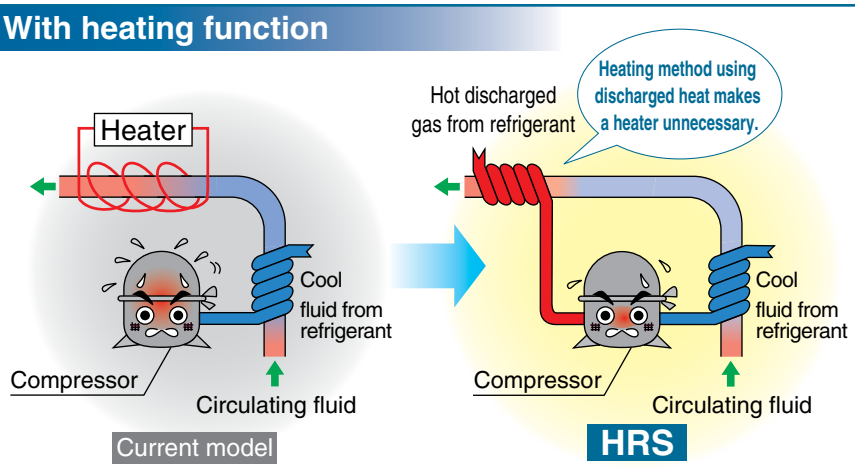

∗ This is just an example diagram.

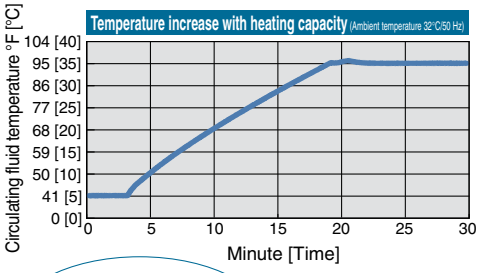

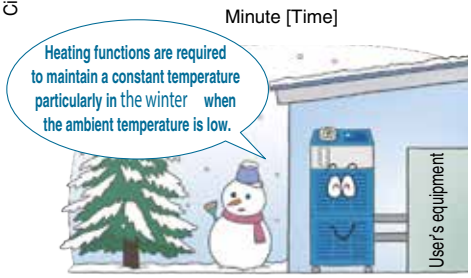

Simple operation

Step ❶ Press the RUN/STOP key.
Step ❷ Adjust the temperature setting with the ▼ / ▲ keys.
Step ❸ Press the RUN/STOP key to stop.
Easy operation by these steps

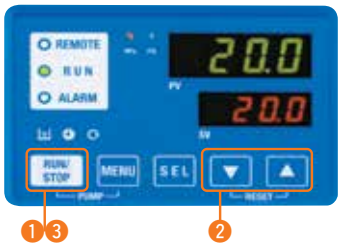

Large digital display

The "large digital display" (7-segment and 4 digits) and "2 row display" provide a clearer view of the current value (PV) and set value (SV).

Shaped for easy supply of circulating fluid

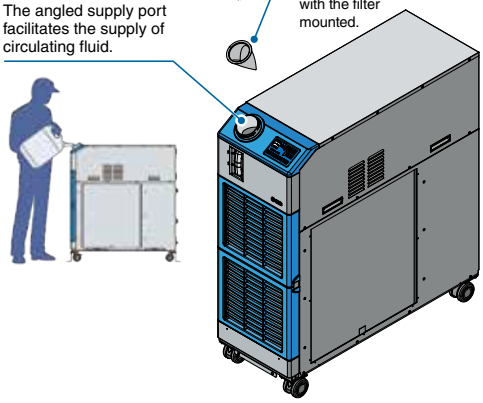

Easy cleaning of the tank

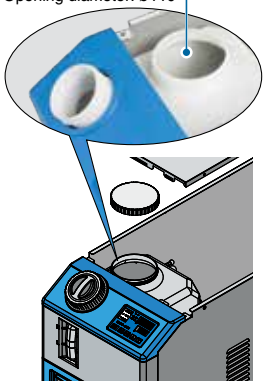

Tool-less inspection and cleaning of air-cooled condenser

∗ For air-cooled refrigeration

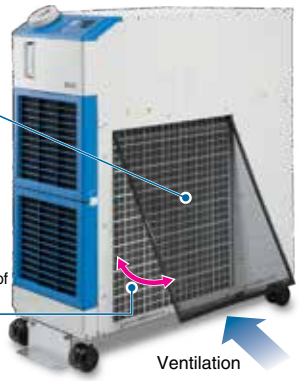

Easy check of the circulating fluid level

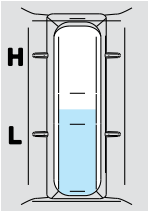

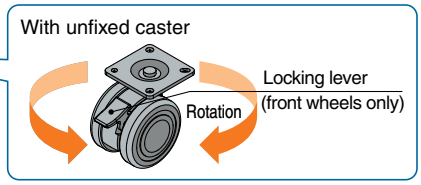

Anchor bolt fixing bracket
∗ Remove bracket when moving, using casters.

Power supply (24 VDC) available

Power can be supplied from the terminal block on the rear side to external switches etc.

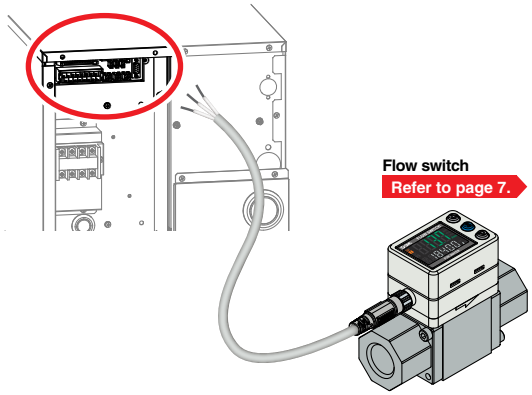

Electric conductivity control set

(With DI filter + Solenoid valve kit for control) (Optional accessory on page 17)

The electric conductivity of the circulating fluid can be set with the controller monitor arbitrarily.

Set control range: 5.0 to 45.0 μS/cm

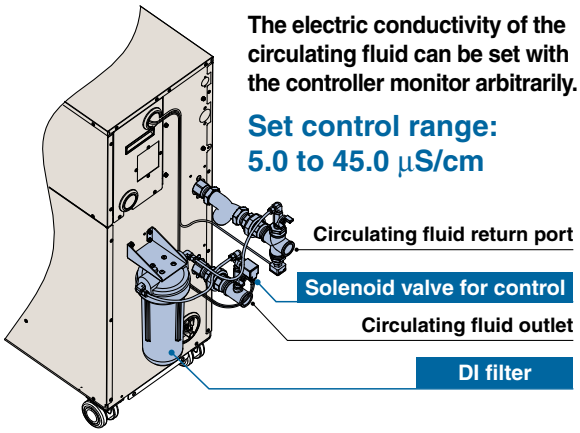

Globally compatible power supplies

(Only 400 VAC type)

(Europe, Asia, Oceania, Central and South America)

CE

Transformer unnecessary

Power supply Applicable to **200 to 230 VAC**, or **380 to 415 VAC**

Transformers are unnecessary even when used overseas.

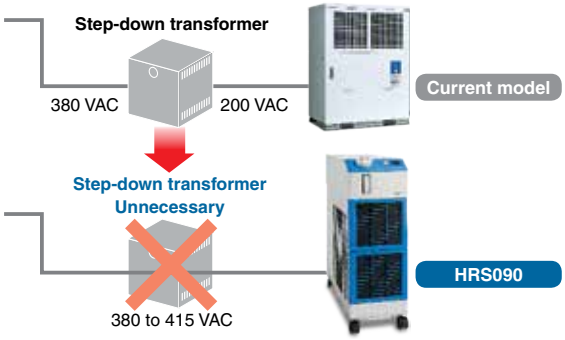

Particle filter set

(Optional accessory on page 17)

Removes foreign matter in the circulating fluid.

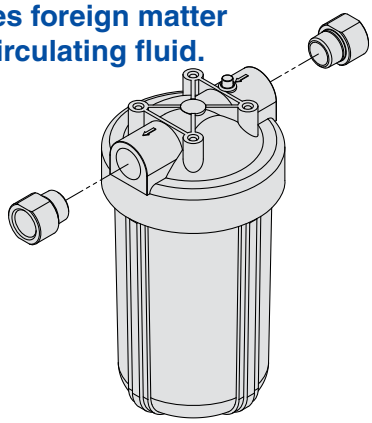

Convenient functions (Refer to the Operation Manual for details.)

Timer operation function

Timer for ON and OFF can be set in units of 0.5 h up to 99.5 h.

Ex.) Can set to stop on Saturday and Sunday and restart on Monday morning.

Ex. SE.02 "ON timer"

Timer The time remaining can be checked.

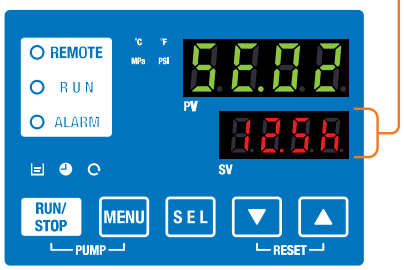

Unit conversion function

Temperature and pressure units can be changed.

Orange indicator lights up.

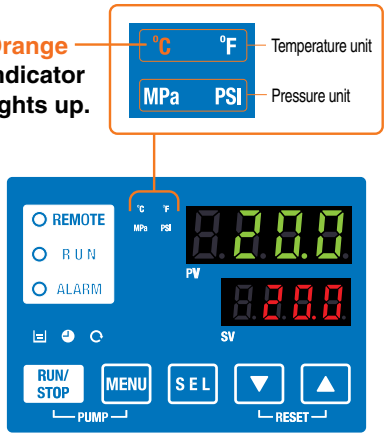

Power failure auto-restart function

Automatic restart from stoppage due to power failure etc. is possible without pressing the RUN/STOP key and remote operation.

Anti-freezing operation function

If the temperature approaches freezing point, e.g. in winter at night, the pump operates automatically and the heat generated by the pump warms the circulating fluid, preventing freezing.

Key-lock function

Can be set in advance to protect the set values from being changed by pressing keys by mistake.

Function to output a signal for completion of preparation

Notifies by communication when the temperature reaches the pre-set temperature range.

Independent operation of the pump

The pump can be operated independently while chiller is powered off. You can check piping leak and remove the air.

Self diagnosis function and check display

Display of individual alarm codes For details, refer to page 13.

Operation is monitored all the time by the integrated sensor.
Should any error occur, the self diagnosis result is displayed by the applicable alarm code.
This makes it easier to identify the cause of the alarm.
Can be used before requesting service.

Changeable alarm set values

Setting item	Set value
Circulating fluid discharge temperature rise	41 to 131°F [5 to 55°C]
Circulating fluid discharge temperature drop	34 to 93°F [1 to 34°C]
Circulating fluid discharge pressure rise	7.3 to 87 psi [0.05 to 0.6 MPa]
Circulating fluid discharge pressure drop	7.3 to 87 psi [0.05 to 0.6 MPa]

Ex. AL01 "Low level in tank"

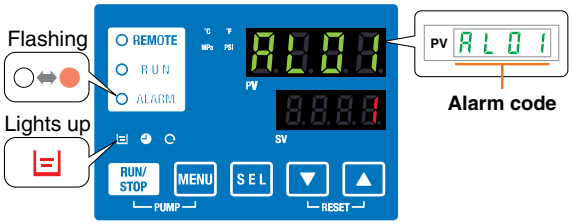

Alarm codes notify of checking times.

Notifies when to check the pump and fan motor.
Helpful for facility maintenance.

∗ The fan motor is not used in water-cooled refrigeration.

Ex. AL28 "Pump maintenance"

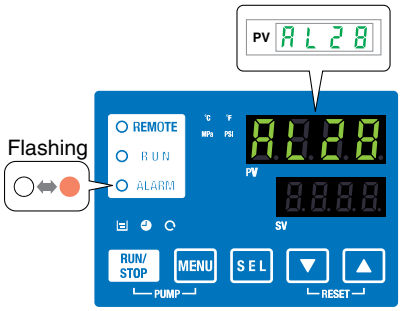

Check display

The internal temperature, pressure and operating time of the product are displayed.

Ex. drv. "Accumulated operating time"

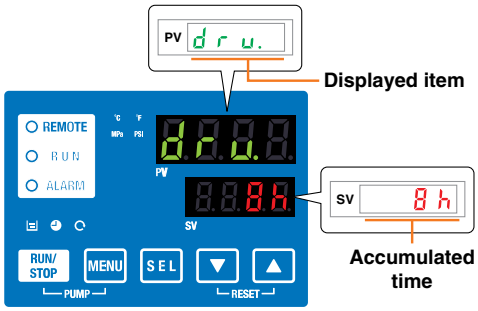

Displayed item
Circulating fluid outlet temperature
Circulating fluid return temperature
Circulating fluid flow rate∗1
Compressor gas temperature
Circulating fluid outlet pressure
Compressor gas discharge pressure
Compressor gas return pressure
Accumulated operating time
Accumulated operating time of pump
Accumulated operating time of fan∗2
Accumulated operating time of compressor
Accumulated operation time of dustproof filter∗2

∗1 This is not measurement value. Use it for reference.
∗2 These are displayed only for air-cooled refrigeration.

Communication function

The serial communication (RS232C/RS485) and contact I/Os (2 inputs and 3 outputs) are equipped as standard.
Communication with the user's equipment and system construction are possible, depending on the application.
A 24 VDC output can be also provided, and is available for a flow switch (SMC's PF2W etc.).

Ex. 1 Remote signal I/O through serial communication

The remote operation is enabled (to start and stop) through serial communication.

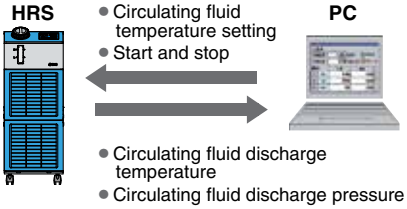

- Circulating fluid temperature setting
- Start and stop

- Circulating fluid discharge temperature
- Circulating fluid discharge pressure
- Run and stop status
- Alarm information
- Various setting information
- Preparation completion status

Ex. 2 Remote operation signal input

One of the contact inputs is used for remote operation and the other is used for a flow switch to monitor the flow, and their warning outputs are taken in.

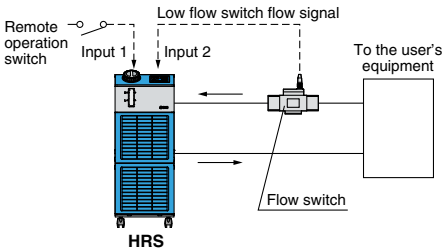

Power for flow switch (24 VDC) can be supplied from thermo-chiller.

Ex. 3 Alarm and operation status (start, stop, etc.) signal output

The alarm and status generated in the product are assigned to 3 output signals based on their contents, and can be output.

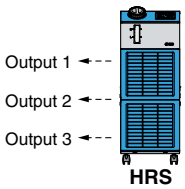

· Output setting example
Output 1: Temperature rise
Output 2: Pressure rise
Output 3: Operation status (start, stop, etc.)

Applications

Laser beam machine/ Laser welding machine

Cooling of the laser oscillation part and power source

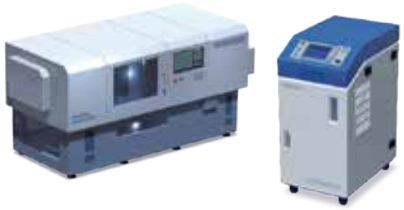

Printing machine

Temperature control of the roller

Cleaning machine

Temperature control of cleaning solution

Arc welding machine

Cooling of the torch

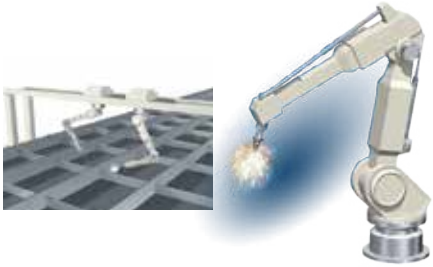

Resistance welding machine (spot welding)

Cooling of the welding head electrodes, transformers and transistors (thyristors)

High frequency induction heating equipment

Cooling of the heating coils, high frequency power source and around inverters

X-ray (digital) instrument

Temperature control of X-ray tube and X-ray light sensing part

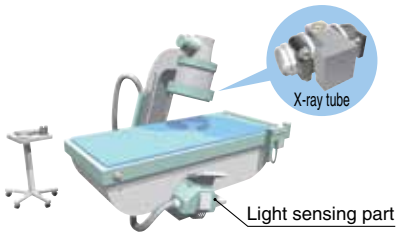

Packaging line (sealing of film and paper package)

Cooling of workpieces for bonding

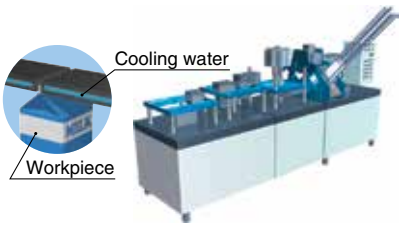

MRI

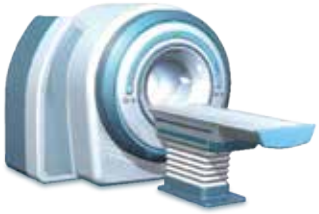

Injection molding

Atomizing device (food and cosmetics)

Temperature control of sample and device

Crushing machine

Cooling of the jacket

Global Supply Network

SMC has a comprehensive network in the global market.

We now have a presence of more than 400 branch offices and distributors in 78 countries world wide such as Asia, Oceania, North/Central/South America, and Europe. With this global network, we are able to provide a global supply of our substantial range of products with the best service. We also provide full support to local factories, foreign manufacturing companies and Japanese companies in each country.

SMC Thermo-chiller Variations

Lots of variations are available in response to the users' requirements.

Series	Temperature stability °F [°C]	Set temperature range °F [°C]	Cooling capacity [kW]												Environment	International standards
			1.2	1.8	2.4	3	5	6	9	10	15	20	25	28		
HRSE Basic type	±3.6 [2.0]	50 to 86 [10 to 30]	●	●	●										Indoor use	CE (Only 230 VAC type)
HRS Standard type	±0.18 [±0.1]	41 to 104 [5 to 40]	●	●	●	●	●	●							Indoor use	CE (Only 60 Hz)
HRS090 Standard type	±0.9 [±0.5]	41 to 95 [5 to 35]							●						Indoor use	CE (400 V as standard)
HRS100/150 Standard type	±1.8 [±1.0]	41 to 95 [5 to 35]								●	●				Outdoor installation IPX4	CE (400 V as standard)
HRSH090 Inverter type	±0.18 [±0.1]	41 to 104 [5 to 40]							●						Indoor use	CE (400 V as standard, 200 V as an option) (Only 200 V as an option)
HRSH Inverter type	±0.18 [±0.1]	41 to 95 [5 to 35]								●	●	●	●	●	Outdoor installation IPX4	CE (400 V as standard, 200 V as an option) (Only 200 V as an option)

Circulating Fluid/Facility Water Line Equipment

Circulating Fluid Line

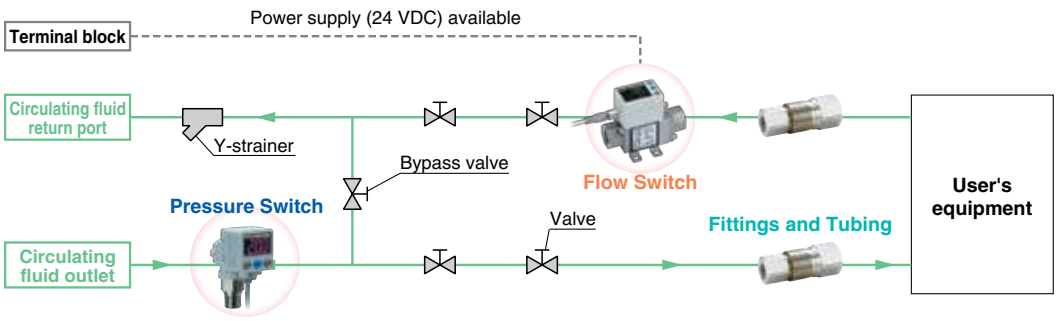

Facility Water Line (Water-cooled)

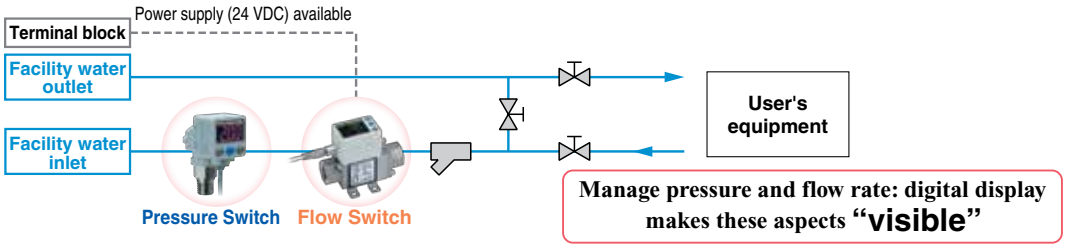

Manage pressure and flow rate: digital display makes these aspects "visible"

Flow Switch: Monitors flow rate and temperature of the circulating fluid.

Refer to the **WEB catalog** or the Best Pneumatics No. 6 for details.

3-Color Display Digital Flow Switch for Water *PF3W*

Integrated flow adjustment valve and temperature sensor

PVC Piping

3-Color Display Electromagnetic Type Digital Flow Switch *LFE*

Digital Flow Switch for Deionized Water and Chemical Liquids *PF2D*
4-Channel Flow Monitor *PF2□200*

Pressure Switch: Monitors pressure of the circulating fluid.

Refer to the **WEB catalog** or the Best Pneumatics No. 6 for details.

2-Color Display High-Precision Digital Pressure Switch *ISE80*

Pressure Sensor for General Fluids *PSE56□*
Pressure Sensor Controller *PSE200,300*

Fittings and Tubing

Refer to the **WEB catalog** or the Best Pneumatics No. 6 for details.

S Coupler *KK*

S Coupler/Stainless Steel (Stainless Steel 304) *KKA*

Metal One-touch Fittings *KQB2*

Stainless Steel 316 One-touch Fittings *KQG2*

Stainless Steel 316 Insert Fittings *KFG2*

Fluoropolymer Fittings *LQ*

Tubing *T□*

Series	Material
T	Nylon
TU	Polyurethane
TH	FEP (Fluoropolymer)
TD	Modified PTFE (Soft fluoropolymer)
TL	Super PFA
TLM	PFA

CONTENTS

Series HRS090 Standard Type

Thermo-chiller *Series HRS090*

How to Order/Specifications

Air-cooled 200 V/400 V ..... Page 9

Water-cooled 200 V/400 V ..... Page 10

Cooling Capacity ..... Page 11

Pump Capacity ..... Page 11

Dimensions ..... Page 12

Operation Display Panel ..... Page 13

List of Function ..... Page 13

Alarm ..... Page 13

Communication Function ..... Page 14

Options

With Earth Leakage Breaker ..... Page 15

With Automatic Fluid Fill Function ..... Page 15

Applicable to Deionized Water Piping ..... Page 15

Optional Accessories

① Piping Conversion Fitting ..... Page 16

② Bypass Piping Set ..... Page 16

③ Electric Conductivity Control Set ..... Page 17

④ Particle Filter Set ..... Page 17

⑤ Filter for Circulating Fluid Fill Port ..... Page 18

Cooling Capacity Calculation

Required Cooling Capacity Calculation ..... Page 19

Precautions on Cooling Capacity Calculation ..... Page 20

Circulating Fluid Typical Physical Property Values ..... Page 20

Specific Product Precautions ..... Page 21

Thermo-chiller Standard Type
Air-cooled 200 V/400 V Type

(Only 400 VAC type)

RoHS

Series HRS090

How to Order

HRS 090 – A □ – 20 – □

Cooling capacity

090	9 kW

Cooling method

A	Air-cooled refrigeration

Pipe thread type

Nil	Rc
F	G (with Rc-G conversion fitting)
N	NPT (with Rc-NPT conversion fitting)

Power supply

20	3-phase 200 VAC (50 Hz) 3-phase 200 to 230 VAC (60 Hz)
40	3-phase 380 to 415 VAC (50/60 Hz)

Option

Nil	None
B Note)	With earth leakage breaker
J	With automatic fluid fill function
M	Applicable to deionized water piping

- When multiple options are combined, indicate symbols in alphabetical order.

Note) 200 V type only.
400 V type is provided with an earth leakage breaker as standard.

Specifications

Model				HRS090-A□-20-□	HRS090-A□-40-□
Cooling method				Air-cooled refrigeration	
Refrigerant				R410A (HFC)	
Control method				PID control	
Ambient temperature*1				41 to 113°F [5 to 45°C]	
Circulating fluid system	Circulating fluid*2			Tap water, 15% ethylene glycol aqueous solution, Deionized water	
	Set temperature range*1			41 to 95°F [5 to 35°C]	
	Cooling capacity 50/60 Hz*3		kW	8.0/9.0	
	Heating capacity 50/60 Hz*4		kW	1.7/2.2	
	Temperature stability*5			±0.9°F [±0.5°C]	
	Pump capacity	Rated flow 50/60 Hz (Outlet)*6	g/min [L/min]	7.7/11.9 [29/45]	
		Maximum flow rate 50/60 Hz	g/min [L/min]	14.5/18.0 [55/68]	
		Maximum pump head		164 ft [50m]	
	Minimum operating flow rate 50/60 Hz*7		g/min [L/min]	7.7/11.9 [29/45]	
	Tank capacity			4.8 gal [18L]	
	Circulating fluid outlet, circulating fluid return port			Rc1 (Symbol F: G1, Symbol N: NPT1)	
	Tank drain port			Rc1/4 (Symbol F: G1/4, Symbol N: NPT1/4)	
	Fluid contact material			Stainless steel, Copper (Heat exchanger brazing), Brass, Bronze, PTFE, FKM, EPDM, PVC, NBR, POM, PE, PP, Carbon, Ceramic	
Electrical system	Power supply			3-phase 200 VAC (50 Hz), 3-phase 200 to 230 VAC (60 Hz) Allowable voltage range ±10% (No continuous voltage fluctuation)	3-phase 380 to 415 VAC (50/60 Hz) Allowable voltage range ±10% (No continuous voltage fluctuation)
	Applicable earth leakage breaker (Standard)	Rated current	A	30	20
		Sensitivity of leak current	mA	30	
	Rated operating current 50/60 Hz*5		A	16/18	8.4/9.1
	Rated power consumption 50/60 Hz*5		kW (kVA)	4.3/5.4 (5.5/6.0)	4.4/5.6 (5.8/6.3)
Noise level (Front 1 m/Height 1 m)*5			dB (A)	73	75
Accessories				Alarm code list stickers 2 pcs. (English 1 pc./Japanese 1 pc.), Operation Manual (for installation/operation) 2 pcs. (English 1 pc./Japanese 1 pc.), Y-strainer (40 meshes) 25A, Barrel nipple 25A, Anchor bolt fixing brackets 2 pcs. (including four M10 bolts)*8	
Weight (dry state)				Approx. 300 lbs [136 Kg]	

∗1 Use a 15% ethylene glycol aqueous solution if operating in a place where the ambient temperature and/or circulating fluid temperature is 50°F [10°C] or less.

∗2 Use fluid in condition below as the circulating fluid.
Tap water: Standard of The Japan Refrigeration And Air Conditioning Industry Association (JRA GL-02-1994)
15% ethylene glycol aqueous solution: diluted by tap water in condition above without any additives such as antiseptics.
Deionized water: Electric conductivity 1 mS/cm or higher (Electric resistivity 1 MW·cm or lower)

∗3 ① Ambient temperature: 90°F [32°C], ② Circulating fluid: Tap water, ③ Circulating fluid temperature: 68°F [20°C], ④ Circulating fluid flow rate: Rated flow, ⑤Power supply: 200/400 VAC

∗4 ① Ambient temperature: 90°F [32°C], ② Circulating fluid: Tap water, ③ Circulating fluid flow rate: Rated flow, ④ Power supply: 200/400 VAC

∗5 ① Ambient temperature: 90°F [32°C], ② Circulating fluid: Tap water, ③ Circulating fluid temperature: 68°F [20°C], ④ Load: Same as the cooling capacity, ⑤ Circulating fluid flow rate: Rated flow, ⑥ Power supply: 200/400 VAC, ⑦ Piping length: Shortest

∗6 When circulating fluid outlet port pressure = 73 psi [0.5 MPa].

∗7 Fluid flow rate to maintain the cooling capacity and to keep the circulating fluid discharge pressure to 73 psi [0.5 MPa] or less. If the actual flow rate is lower than this, install a bypass piping.

∗8 The anchor bolt fixing brackets (including four M10 bolts) are used for fixing to wooden skids when packaging the thermo-chiller. No anchor bolt is included.

Thermo-chiller Standard Type

Water-cooled 200 V/400 V Type

(Only 400 VAC type)

RoHS

Series HRS090

How to Order

HRS 090 – W □ – 20 – □

Cooling capacity

090	9 kW

Cooling method

W	Water-cooled refrigeration

Pipe thread type

Nil	Rc
F	G (with Rc-G conversion fitting)
N	NPT (with Rc-NPT conversion fitting)

Power supply

20	3-phase 200 VAC (50 Hz) 3-phase 200 to 230 VAC (60 Hz)
40	3-phase 380 to 415 VAC (50/60 Hz)

Option

Nil	None
B Note)	With earth leakage breaker
J	With automatic fluid fill function
M	Applicable to deionized water piping

- When multiple options are combined, indicate symbols in alphabetical order.

Note) 200 V type only.
400 V type is provided with an earth leakage breaker as standard.

Specifications

Model				HRS090-W□-20-□	HRS090-W□-40-□
Cooling method				Water-cooled refrigeration	
Refrigerant				R410A (HFC)	
Control method				PID control	
Ambient temperature*1				41 to 113°F [5 to 45°C]	
Circulating fluid system	Circulating fluid*2			Tap water, 15% ethylene glycol aqueous solution, Deionized water	
	Set temperature range*1			41 to 95°F [5 to 35°C]	
	Cooling capacity 50/60 Hz*3		kW	9.0/10.5	
	Heating capacity 50/60 Hz*4		kW	1.7/2.2	
	Temperature stability*5			±0.9°F [±0.5°C]	
	Pump capacity	Rated flow 50/60 Hz (Outlet)*6		7.7/11.9 g/min [29/45 L/min]	
		Maximum flow rate 50/60 Hz		14.5/18.0 g/min [55/68 L/min]	
		Maximum pump head		164 ft [50 m]	
	Minimum operating flow rate 50/60 Hz*7			7.7/11.9 g/min [29/45 L/min]	
	Tank capacity			4.8 gal [18 L]	
	Circulating fluid outlet, circulating fluid return port			Rc1 (Symbol F: G1, Symbol N: NPT1)	
	Tank drain port			Rc1/4 (Symbol F: G1/4, Symbol N: NPT1/4)	
	Fluid contact material			Stainless steel, Copper (Heat exchanger brazing), Brass, Bronze, PTFE, FKM, EPDM, PVC, NBR, POM, PE, PP, Carbon, Ceramic	
Facility water system	Temperature range			41 to 104°F [5 to 40°C]	
	Pressure range			44 to 73 psi [0.3 to 0.5 MPa]	
	Required flow 50/60 Hz			5.5/5.5 g/min [25/25 L/min]	
	Facility water pressure differential			44 psi [0.3 MPa] or more	
	Facility water inlet/outlet			Rc1/2 (Symbol F: G1/2, Symbol N: NPT1/2)	
	Fluid contact material			Stainless steel, Copper (Heat exchanger brazing), Bronze, Brass PTFE, NBR, EPDM	
Electrical system	Power supply			3-phase 200 VAC (50 Hz), 3-phase 200 to 230 VAC (60 Hz) Allowable voltage range ±10% (No continuous voltage fluctuation)	3-phase 380 to 415 VAC (50/60 Hz) Allowable voltage range ±10% (No continuous voltage fluctuation)
	Applicable earth leakage breaker*8	Rated current	A	30	20
		Sensitivity of leak current	mA	30	
	Rated operating current 50/60 Hz*5		A	13/14	6.4/6.7
	Rated power consumption 50/60 Hz*5		kW (kVA)	3.3/4.2 (4.4/4.9)	3.4/4.2 (4.4/4.7)
Noise level (Front 1 m/Height 1 m)*5			dB (A)	65	
Accessories				Alarm code list stickers 2 pcs. (English 1 pc./Japanese 1 pc.), Operation Manual (for installation/operation) 2 pcs. (English 1 pc./Japanese 1 pc.), Y-strainer (40 meshes) 25A, Barrel nipple 25A, Anchor bolt fixing brackets 2 pcs. (including four M10 bolts)*9	
Weight (dry state)				Approx. 273 lbs [124 Kg]	

∗1 Use a 15% ethylene glycol aqueous solution if operating in a place where the ambient temperature and/or circulating fluid temperature is 50°F [10°C] or less.

∗2 Use fluid in condition below as the circulating fluid.
Tap water: Standard of The Japan Refrigeration And Air Conditioning Industry Association (JRA GL-02-1994)
15% ethylene glycol aqueous solution: diluted by tap water in condition above without any additives such as antiseptics.
Deionized water: Electric conductivity 1 mS/cm or higher (Electric resistivity 1 MW·cm or lower)

∗3 ① Ambient temperature: 90°F [32°C], ② Circulating fluid: Tap water, ③ Circulating fluid temperature: 68°F [20°C], ④ Circulating fluid flow rate: Rated flow, ⑤Power supply: 200/400 VAC

∗4 ① Ambient temperature: 90°F [32°C], ② Circulating fluid: Tap water, ③ Circulating fluid flow rate: Rated flow, ④ Power supply: 200/400 VAC

∗5 ① Ambient temperature: 90°F [32°C], ② Circulating fluid: Tap water, ③ Circulating fluid temperature: 68°F [20°C], ④ Load: Same as the cooling capacity, ⑤Circulating fluid flow rate: Rated flow, ⑥ Power supply: 200/400 VAC, ⑦ Piping length: Shortest

∗6 When circulating fluid outlet port pressure = 73 psi [0.5 MPa].

∗7 Fluid flow rate to maintain the cooling capacity and to keep the circulating fluid discharge pressure to 73 psi [0.5 MPa] or less. If the actual flow rate is lower than this, install a bypass piping.

∗8 To be prepared by user. A specified earth leakage breaker is installed for option B [With earth leakage breaker].

∗9 The anchor bolt fixing brackets (including four M10 bolts) are used for fixing to wooden skids when packaging the thermo-chiller. No anchor bolt is included.

Cooling Capacity

HRS090-A-20/40 (50 Hz)

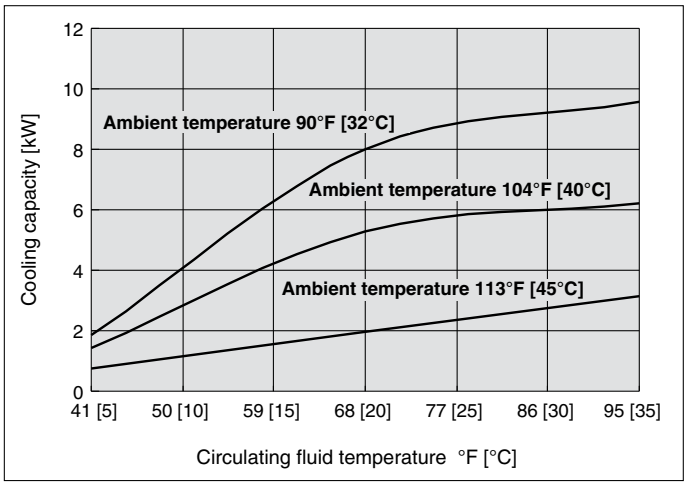

HRS090-A-20/40 (60 Hz)

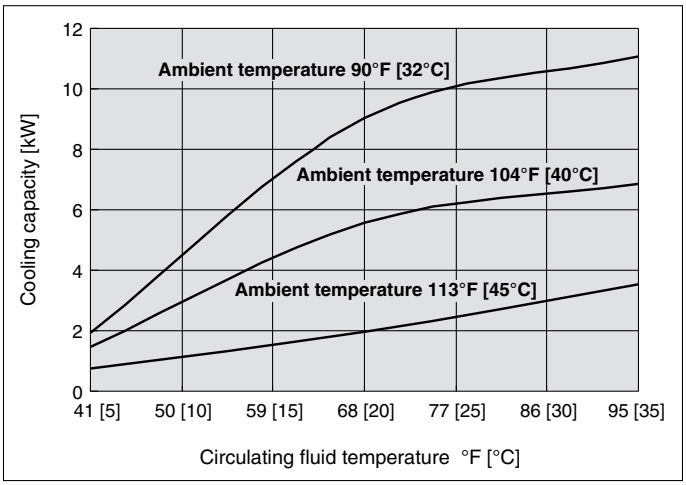

HRS090-W-20/40 (50 Hz)

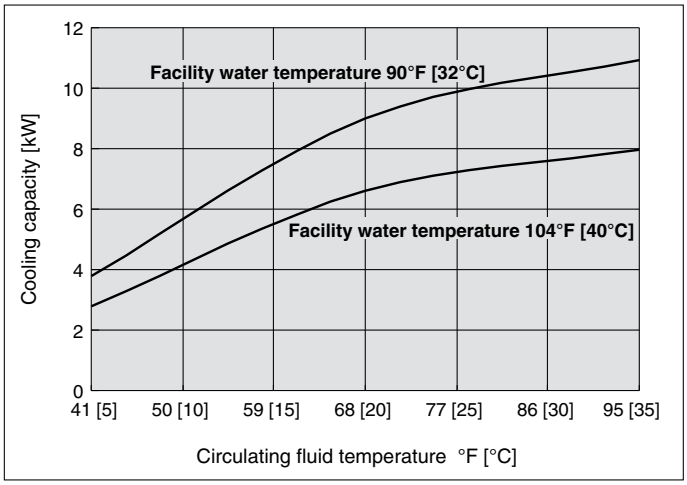

HRS090-W-20/40 (60 Hz)

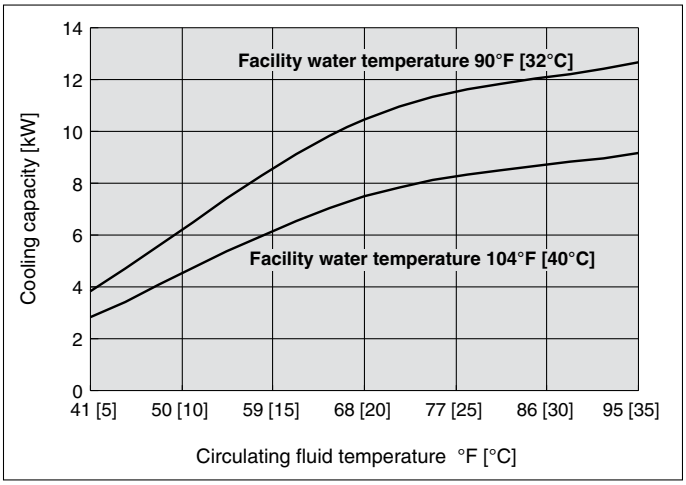

Pump Capacity

HRS090-A-20/40
HRS090-W-20/40

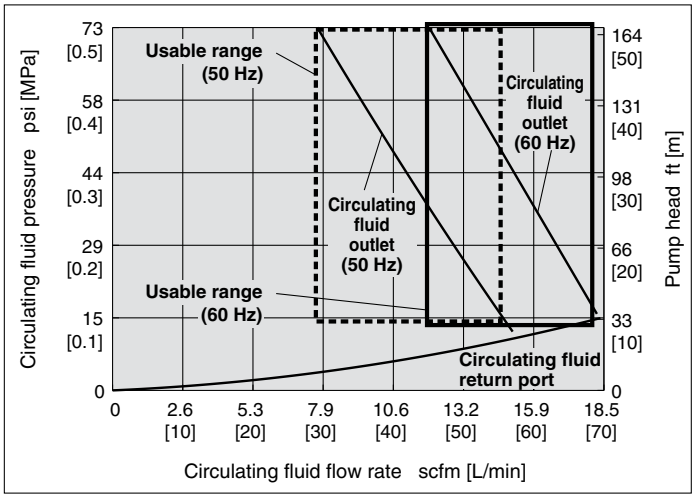

Dimensions

inch [mm]

HRS090-□-20/40

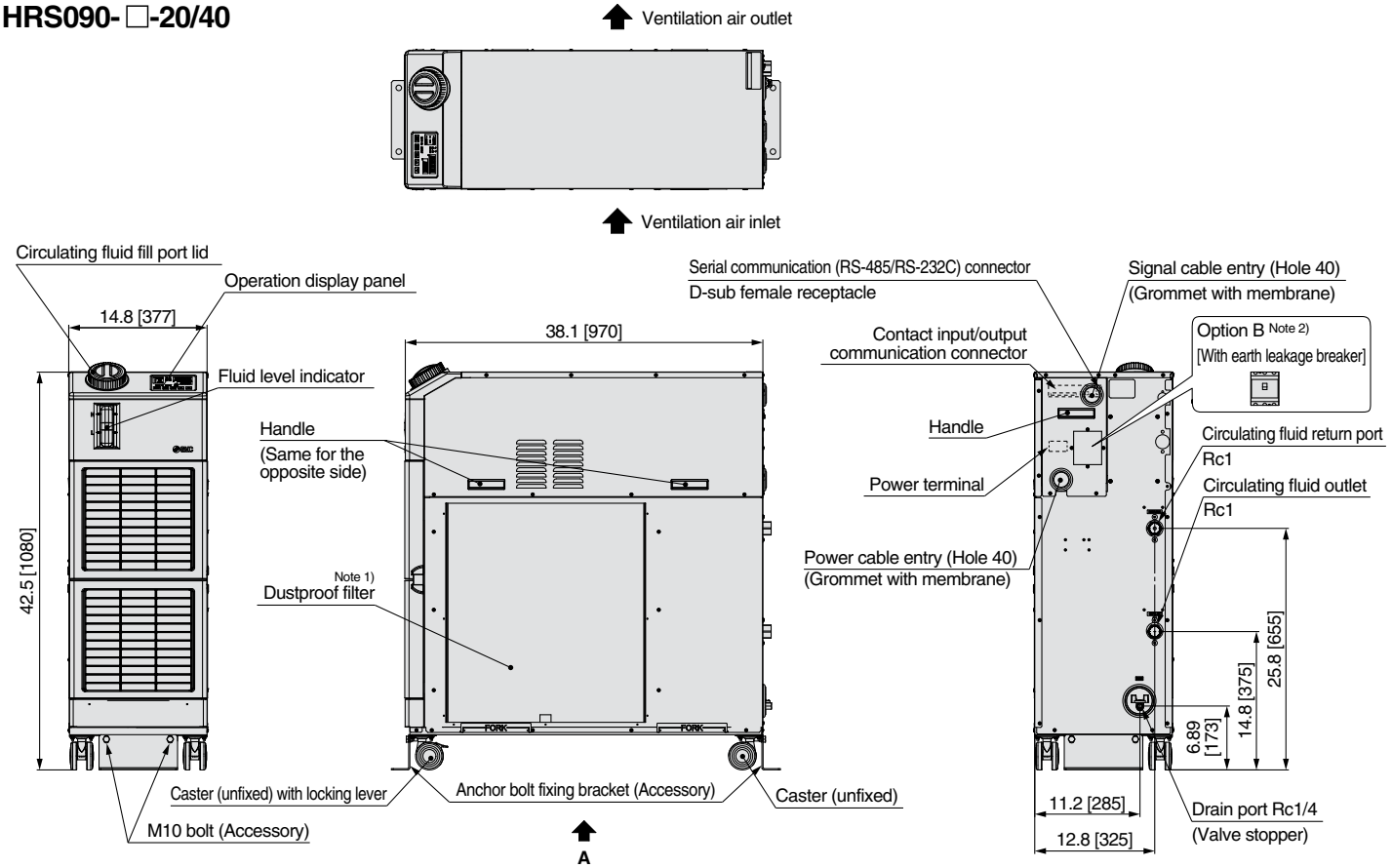

Anchor bolt fixing position

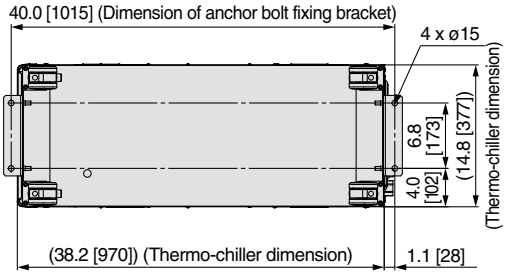

View A

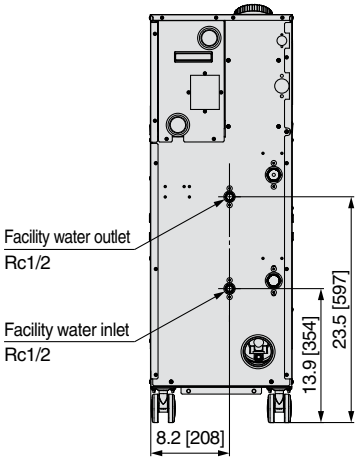

For water-cooled type

Accessory: Y-strainer mounting view

∗ Mount it by yourself on the circulating fluid return port.

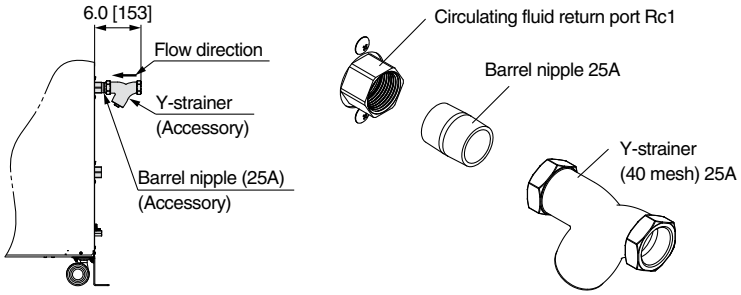

Operation Display Panel

The basic operation of this unit is controlled through the operation display panel on the front of the product.

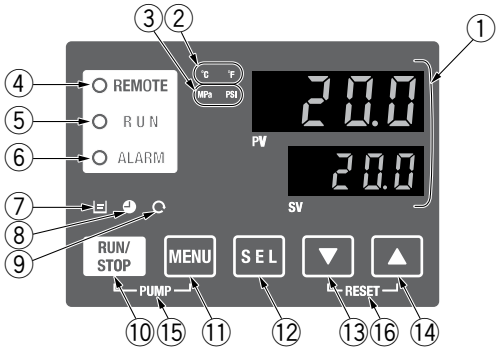

No.	Description	Function	
①	**Digital display (7 segment, 4 digits)**	PV	Displays the circulating fluid current discharge temperature and pressure and alarm codes and other menu items (codes).
		SV	Displays the circulating fluid discharge temperature and the set values of other menus.
②	**[°C] [°F] lamp**	Equipped with a unit conversion function. Displays the unit of displayed temperature (default setting: °C).	
③	**[MPa] [PSI] lamp**	Equipped with a unit conversion function. Displays the unit of displayed pressure (default setting: MPa).	
④	**[REMOTE] lamp**	Enables remote operation (start and stop) by communication. Lights up during remote operation.	
⑤	**[RUN] lamp**	Lights up when the product is started, and goes off when it is stopped. Flashes during stand-by for stop or anti-freezing function, or independent operation of the pump.	
⑥	**[ALARM] lamp**	Flashes with buzzer when alarm occurs.	
⑦	**[⊨] lamp**	Lights up when the surface of the fluid level indicator falls below the L level.	
⑧	**[◕] lamp**	Equipped with a timer for start and stop. Lights up when this function is operated.	
⑨	**[◯] lamp**	Equipped with a power failure auto-restart function, which restarts the product automatically after stopped due to a power failure. Lights up when this function is operated.	
⑩	**[RUN/STOP] key**	Makes the product start or stop.	
⑪	**[MENU] key**	Shifts the main menu (display screen of circulating fluid discharge temperature and pressure) and other menus (for monitoring and entry of set values).	
⑫	**[SEL] key**	Changes the item in menu and enters the set value.	
⑬	**[▼] key**	Decreases the set value.	
⑭	**[▲] key**	Increases the set value.	
⑮	**[PUMP] key**	Press the [MENU] and [RUN/STOP] keys simultaneously. The pump starts running independently to make the product ready for start-up (release the air).	
⑯	**[RESET] key**	Press the [▼] and [▲] keys simultaneously. The alarm buzzer is stopped and the [ALARM] lamp is reset.	

List of Function

No.	Function	Outline
1	**Main display**	Displays the current and set temperature of the circulating fluid, discharge pressure of the circulating fluid. Changes the circulating fluid set temperature.
2	**Alarm display menu**	Indicates alarm number when an alarm occurs.
3	**Inspection monitor menu**	Product temperature, pressure and accumulated operating time can be checked as daily inspection. Use these for daily inspection.
4	**Key-lock**	Keys can be locked so that set values cannot be changed by operator error.
5	**Timer for operation start/stop**	Timer is used to set the operation start/stop.
6	**Signal for the completion of preparation**	A signal is output when the circulating fluid temperature reaches the set temperature, when using contact input/output and serial communication.
7	**Offset function**	Use this function when there is a temperature offset between the discharge temperature of the thermo-chiller and user's equipment.
8	**Reset after power failure**	Start operation automatically after the power supply is turned on.
9	**Key click sound setting**	Operation panel key sound can be set on/off.
10	**Changing temp. unit**	Temperature unit can be changed. Centigrade (°C) ⇔ Fahrenheit (°F)
11	**Changing pressure unit**	Pressure unit can be changed. MPa ⇔ PSI
12	**Data reset**	Functions can be reset to the default settings (settings when shipped from the factory).
13	**Accumulation time reset**	Reset function when the pump, the fan or the compressor is replaced. Reset the accumulated time here.
14	**Anti-freezing function**	Circulating fluid is protected from freezing during winter or at night. Set beforehand if there is a risk of freezing.
15	**Warming-up function**	When circulating fluid temperature rising time at starting needs shortening during winter or at night, set beforehand.
16	**Alarm buzzer sound setting**	Alarm sound can be set to on/off.
17	**Alarm customizing**	Operation during alarm condition and threshold values can be changed depending on the alarm type.
18	**Communication**	This function is used for contact input/output or serial communication.

Alarm

This unit has alarms as standard, and displays each of them by its alarm code on the PV screen with the [ALARM] lamp ([LOW LEVEL] lamp) lit up on the operation display panel. The alarm can be read out through communication.

Code	Alarm message
AL01	Low level in tank
AL02	High circulating fluid discharge temp.
AL03	Circulating fluid discharge temp. rise
AL04	Circulating fluid discharge temp. drop
AL05	High circulating fluid return temp.
AL06	High circulating fluid discharge pressure
AL07	Abnormal pump operation
AL08	Circulating fluid discharge pressure rise
AL09	Circulating fluid discharge pressure drop
AL10	High compressor intake temp.
AL11	Low compressor intake temp.
AL12	Low super heat temp.
AL13	High compressor discharge pressure
AL15	Refrigeration circuit pressure (high pressure side) drop
AL16	Refrigeration circuit pressure (low pressure side) rise

Code	Alarm message
AL17	Refrigeration circuit pressure (low pressure side) drop
AL18	Compressor running failure
AL19	Communication error
AL20	Memory error
AL21	DC line fuse cut
AL22	Circulating fluid discharge temp. sensor failure
AL23	Circulating fluid return temp. sensor failure
AL24	Compressor intake temp. sensor failure
AL25	Circulating fluid discharge pressure sensor failure
AL26	Compressor discharge pressure sensor failure
AL27	Compressor intake pressure sensor failure
AL28	Pump maintenance
AL29	Fan maintenance
AL30	Compressor maintenance
AL31	Contact input 1 signal detection

Code	Alarm message
AL32	Contact input 2 signal detection
AL37	Compressor discharge temp. sensor failure
AL38	Compressor discharge temp. rise
AL40	Dustproof filter maintenance Note)
AL41	Power stoppage
AL42	Compressor waiting
AL43	Fan failure Note)
AL45	Compressor over current
AL47	Pump over current
AL50	Incorrect phase error
AL51	Phase board over current

Note) Does not occur on the product of water-cooled refrigeration type.

∗ For details, read the Operation Manual.

For details, refer to the Operation Manual. Please download it via our website, http://www.smcworld.com

Communication Function

Contact Input/Output

Item		Specifications
Connector type		M3 terminal block
Input signal	**Insulation method**	Photocoupler
	Rated input voltage	24 VDC
	Operating voltage range	21.6 to 26.4 VDC
	Rated input current	5 mA TYP
	Input impedance	4.7 kΩ
Contact output signal	**Rated load voltage**	48 VAC or less/30 VDC or less
	Maximum load current	500 mA AC/DC (resistance load)
	Minimum load current	5 VDC 10 mA
Output voltage		24 VDC ±10% 500 mA MAX (No inductive load)
Circuit diagram		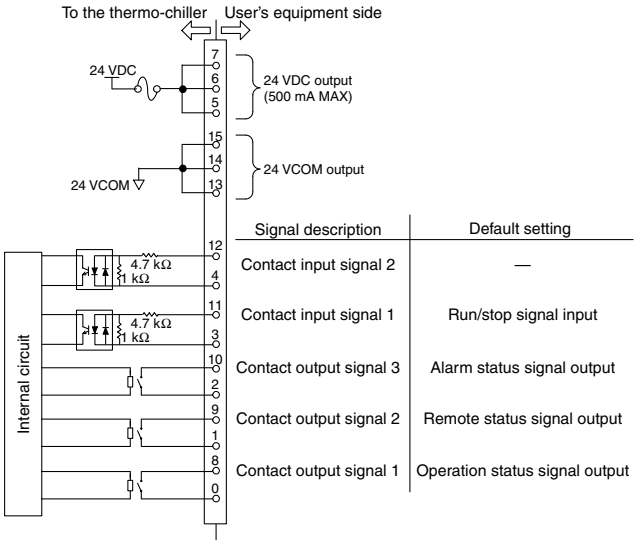

∗ The pin numbers and output signals can be set by user. For details, refer to the Operation Manual for communication.

Serial Communication

The serial communication (RS-485/RS-232C) enables the following items to be written and read out.
For details, refer to the Operation Manual for communication.

Writing

Run/Stop
Circulating fluid temperature setting (SV)

Readout

Circulating fluid present temperature
Circulating fluid discharge pressure
Status information
Alarm occurrence information

Item	Specifications	
Connector type	D-sub 9-pin, Female connector	
Protocol	Modicon Modbus compliant/Simple communication protocol	
Standards	EIA standard RS-485	EIA standard RS-232C
Circuit diagram	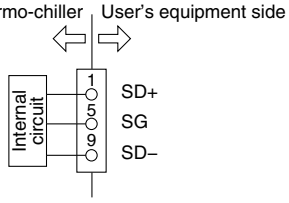	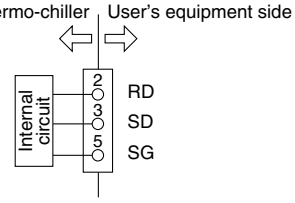

∗ The terminal resistance of RS-485 (120 Ω) can be switched by the operation display panel. For details, refer to the Operation Manual for communication.
Do not connect other than in the way shown above, as it can result in failure.

Please download the Operation Manual via our website, http://www.smcworld.com

Options

Note) Select the option when ordering the thermo-chiller because the option cannot be added after purchasing the unit.

B Option symbol

With Earth Leakage Breaker

HRS090−□□−20−B

With automatic fluid fill function

A leakage breaker is built in to automatically stop the supply power when it has short-circuit, over current or electrical leakage. (For models with power supply specification '- 4 0 ', it is not necessary to select this option because an earth leakage breaker is equipped as standard.)

Applicable model	Rated current [A]	Sensitivity of leak current [mA]	Short circuit display method
HRS090-□□-20-B	30	30	Mechanical button

∗ 400 V type is equipped as standard.

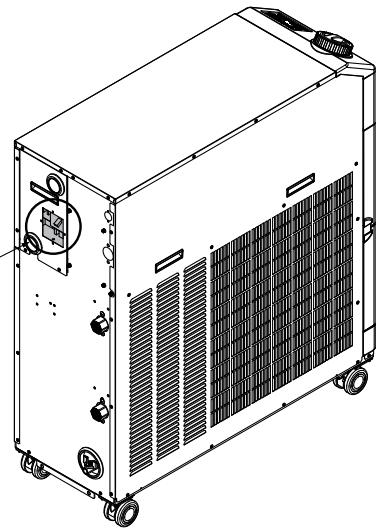

J Option symbol

With Automatic Fluid Fill Function

HRS090−□□−□−J

With earth leakage breaker

By installing this at the automatic fluid fill port, the circulating fluid can be automatically supplied to the product using a built-in solenoid valve for filling fluid while the circulating fluid is decreasing.

Applicable model	**HRS090-□□-□-J**
Fluid fill method	Built-in solenoid valve for automatic fluid filling
Fluid fill pressure	29 to 73 psi [0.2 to 0.5 MPa]
Feed water temperature	41 to 104°F [5 to 40°C]

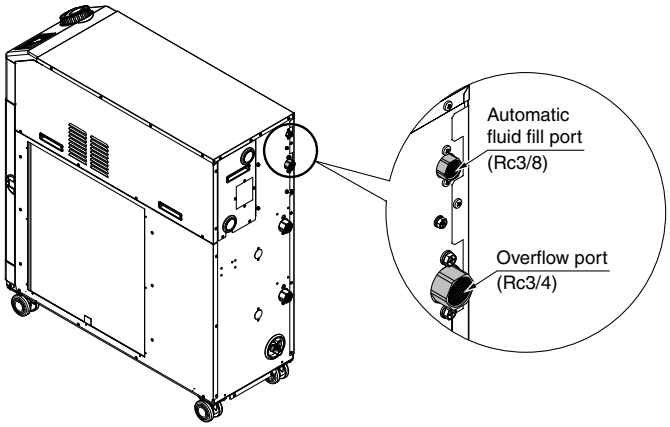

M Option symbol

Applicable to Deionized Water Piping

HRS090−□□−□−M

Applicable to deionized water piping

Contact material of the circulating fluid circuit is made from non-copper materials.

Applicable model	**HRS090-□□-□-M**
Contact material for circulating fluid	Stainless steel (including heat exchanger brazing), SiC, Carbon, PP, PE, POM, FKM, NBR, EPDM, PVC, PTFE

∗ No change in external dimensions.

Optional Accessories

① Piping Conversion Fitting

This is a fitting to change the port from Rc to G or NPT.
· Circulating fluid outlet, Circulating fluid return port Rc1 → NPT1 or G1
· Drain port Rc1/4 → NPT1/4 or G1/4
(It is not necessary to purchase this when pipe thread type F or N is selected in "How to Order" since it is included in the product.)

Part no.	Contents	Applicable model
HRS-EP018	NPT thread conversion fitting set	**HRS090-A-20**
HRS-EP019	G thread conversion fitting set	

Part no.	Contents	Applicable model
HRS-EP022	NPT thread conversion fitting set	**HRS090-W-20**
HRS-EP023	G thread conversion fitting set	

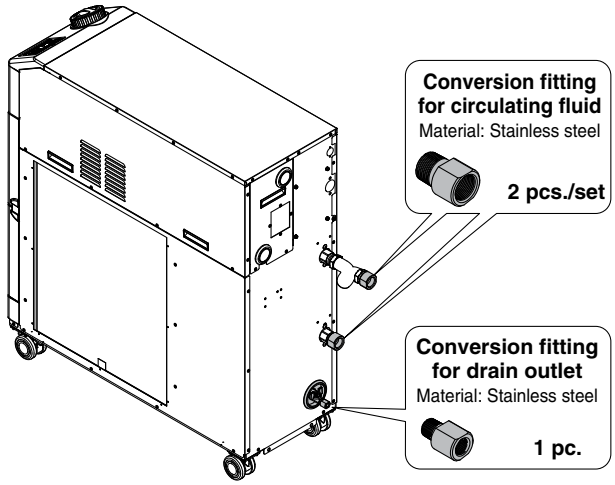

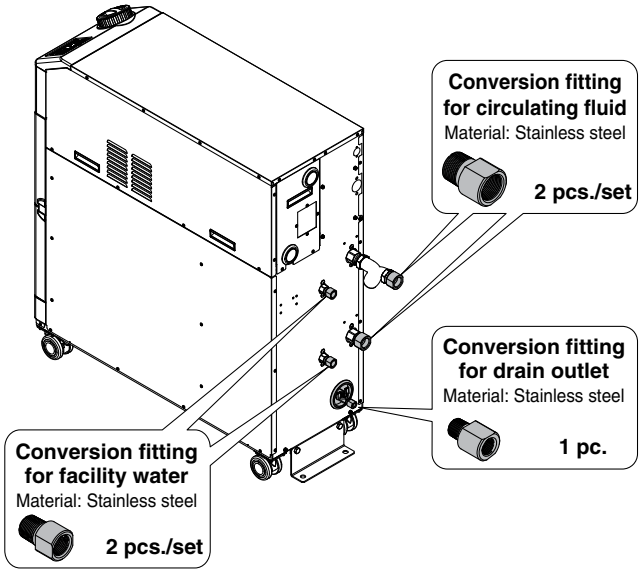

When option J (With automatic fluid fill function) is included, use the following part numbers.
· Automatic fluid fill port Rc3/8 → NPT3/8 or G3/8
· Overflow port Rc3/4 → NPT3/4 or G3/4
∗ The conversion fittings for circulating fluid outlet/return port, drain port, facility water inlet/outlet (for water-cooled refrigeration) are also included.

Part no.	Contents	Applicable model
HRS-EP020	NPT thread conversion fitting set	**HRS090-A-J**
HRS-EP021	G thread conversion fitting set	

Part no.	Contents	Applicable model
HRS-EP024	NPT thread conversion fitting set	**HRS090-W-J**
HRS-EP025	G thread conversion fitting set	

② Bypass Piping Set

When the circulating fluid goes below the minimum operating flow rate (as shown below), cooling capacity will be reduced and the temperature stability will be badly affected. Use the bypass piping set to ensure a circulating fluid flow rate of the minimum operating flow rate or more.

Part no.	Applicable model	Minimum operating flow rate (50/60 Hz) [L/min]
HRS-BP005	**HRS090-□□-20/40**	29/45

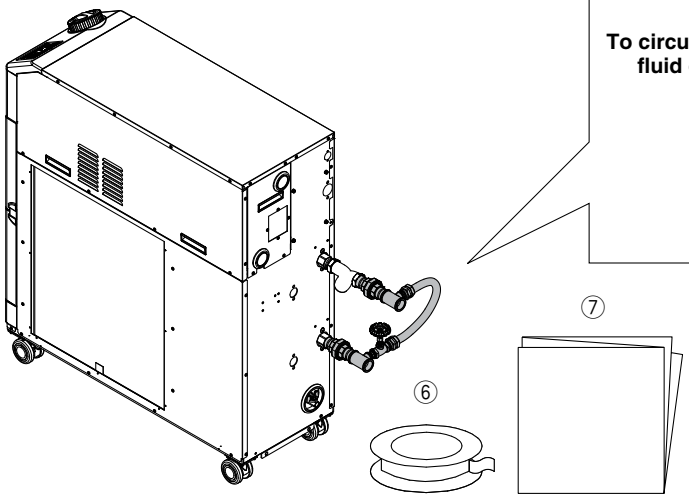

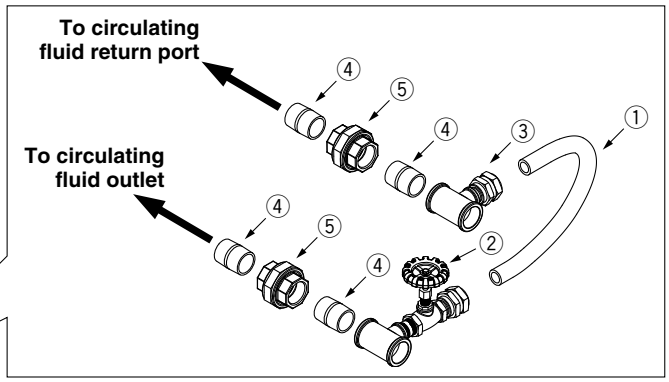

Parts List

No.	Description
①	Hose (I.D.: 0.6 in [15 mm], Length: 27.6 in [700 mm)]
②	Outlet piping assembly (With globe valve)
③	Return piping assembly
④	Barrel nipple (Size: 1 inch) (2 pcs.)
⑤	Union (Size: 1 inch) (2 pcs.)
⑥	Sealant tape
⑦	Operation Manual

③ Electric Conductivity Control Set

inch [mm]

The set indicates and controls the electric conductivity of the circulating fluid. Refer to the Operation Manual for details.

Part no.	Applicable model
HRS-DI007	**HRS090-□□-20/40**

Measurement range of electric conductivity	2.0 to 48.0 μS/cm
Set range of electric conductivity target	5.0 to 45.0 μS/cm
Set range of electric conductivity hysteresis	2.0 to 10.0 μS/cm
Operating temperature range (Circulating fluid temperature)	41 to 140°F [5 to 60°C]
Power consumption	400 mA or less

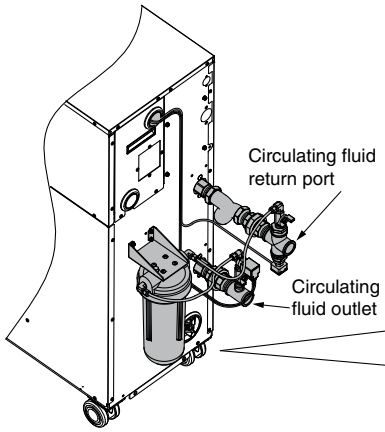

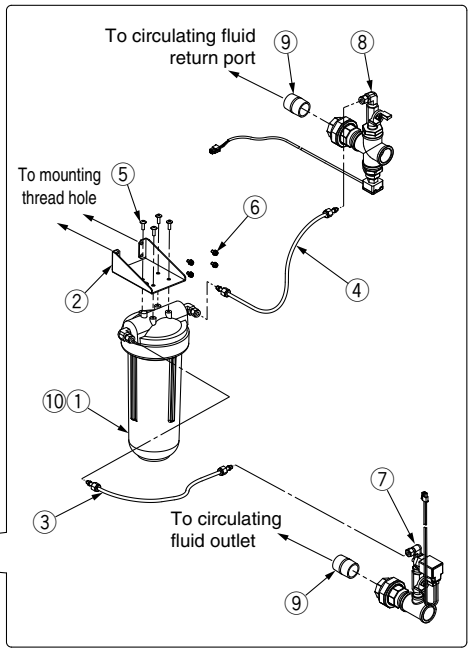

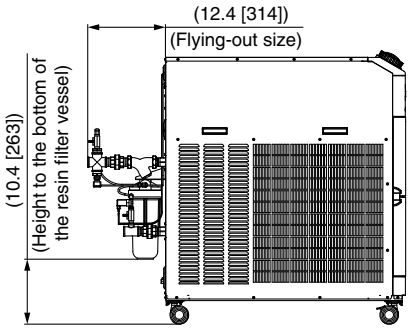

Parts List

No.	Description
①	DI filter vessel (resin)
②	Mounting bracket
③	DI filter inlet tube
④	DI filter outlet tube
⑤	Tapping screw (4 pcs.)
⑥	Mounting screw (4 pcs.)
⑦	DI control piping assembly
⑧	DI sensor assembly
⑨	Nipple (2 pcs.)
⑩	DI filter cartridge (Part no.: HRS-DF001)

④ Particle Filter Set

Removes foreign matter in the circulating fluid. This set cannot be directly connected to the thermo-chiller. Install it in the user's piping system. Refer to the Operation Manual for details.

Particle Filter Set

HRS−PF005−H

Accessory

Symbol	Accessory
Nil	None
H	With handle

Fluid	Tap water
Max. operating pressure	94 psi [0.65 MPa]
Operating temperature range	41 to 95°F [5 to 35°C]
Nominal filtration accuracy	5 μm
Installation environment	Indoors

Parts List

No.	Description	Material	Q'ty	Note
①	Body	PC, PP	1	—
②	Element	PP	1	—
③	Extension piece	Stainless steel	2	Conversion from NPT to Rc
④	Handle	—	1	When -H is selected
⑤	Sealant tape	PTFE	1	—

Replacement Element

HRS−PF006

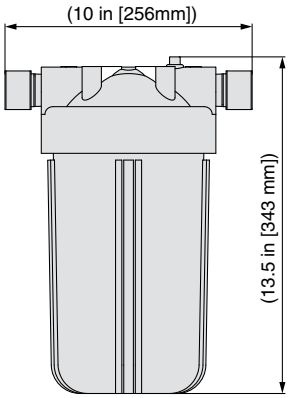

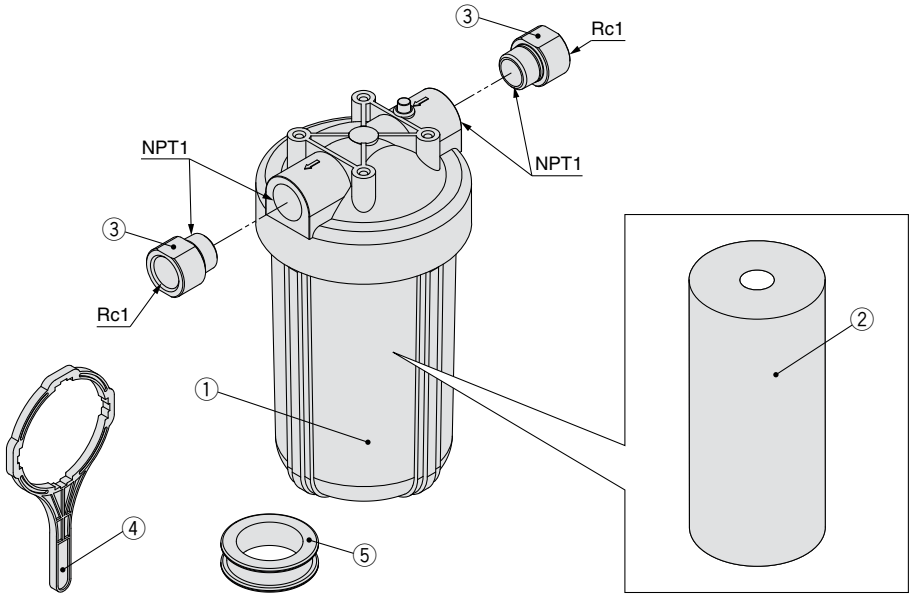

⑤ Filter for Circulating Fluid Fill Port

Prevents foreign matter from entering the tank when supplying the circulating fluid. Can be used just by fitting into the circulating fluid fill port.

■ Filter for circulating fluid fill port
HRS-PF007

Material	Stainless steel 304, Stainless steel 316
Mesh size	200

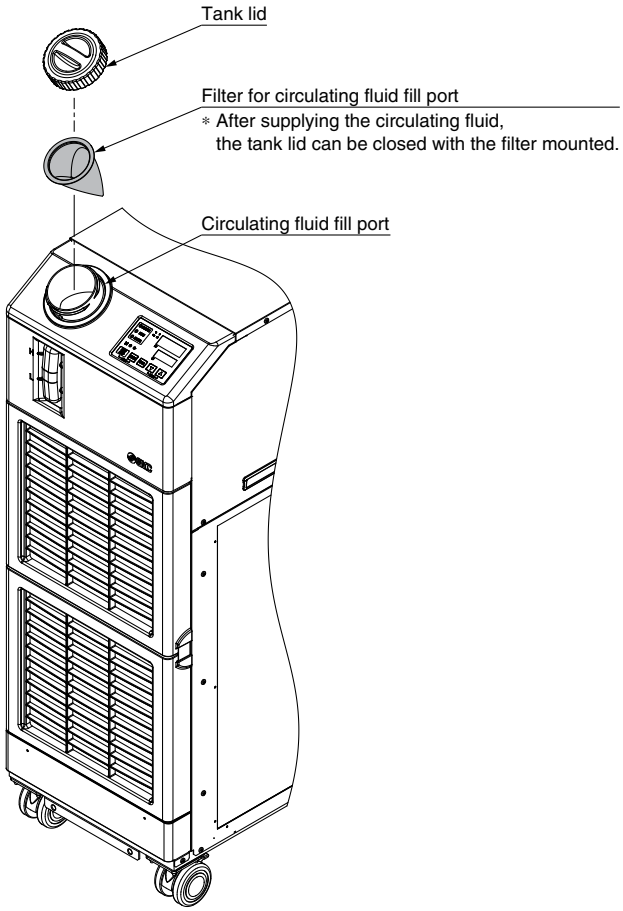

Cooling Capacity Calculation

Required Cooling Capacity Calculation

Example 1: When the heat generation amount in the user's equipment is known.

The heat generation amount can be determined based on the power consumption or output of the heat generating area — i.e. the area requiring cooling — within the user's equipment.*

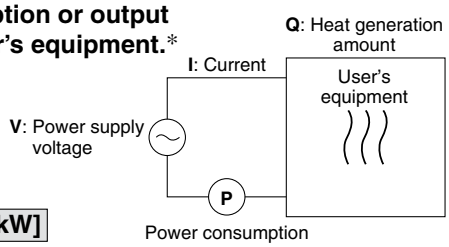

① **Derive the heat generation amount from the power consumption.**

Power consumption **P**: 7 [kW]

Q = P = 7 [kW]

Cooling capacity = Considering a safety factor of 20%, **7 [kW] x 1.2 = 8.4 [kW]**

② **Derive the heat generation amount from the power supply output.**

Power supply output **VI**: 8.8 [kVA]

Q = P = V x I x Power factor

In this example, using a power factor of 0.85:

= 8.8 [kVA] x 0.85 = 7.5 [kW]

Cooling capacity = Considering a safety factor of 20%,

7.5 [kW] x 1.2 = 9.0 [kW]

③ **Derive the heat generation amount from the output.**

Output (shaft power etc.) **W**: 13 [kW]

$$Q = P = \frac{W}{\text{Efficiency}}$$

In this example, using an efficiency of 0.7:

$$= \frac{5.1}{0.7} = 7.3\ [\text{kW}]$$

Cooling capacity = Considering a safety factor of 20%,

7.3 [kW] x 1.2 = 8.8 [kW]

* The above examples calculate the heat generation amount based on the power consumption.
The actual heat generation amount may differ due to the structure of the user's equipment.
Be sure to check it carefully.

Example 2: When the heat generation amount in the user's equipment is not known.

Obtain the temperature difference between inlet and outlet by circulating the circulating fluid inside the user's equipment.

Heat generation amount by user's equipment **Q**	: Unknown [W] ([J/s])
Circulating fluid	: Tap water*
Circulating fluid mass flow rate **qm**	: (= ρ x **qv** ÷ 60) [kg/s]
Circulating fluid density ρ	: 1 [kg/L]
Circulating fluid (volume) flow rate **qv**	: 35 [L/min]
Circulating fluid specific heat **C**	: 4.186 x 10^3 [J/(kg·K)]
Circulating fluid outlet temperature T_1	: 293 [K] (20 [°C])
Circulating fluid return temperature T_2	: 296 [K] (23 [°C])
Circulating fluid temperature difference ΔT	: 3 [K] (= $T_2 - T_1$)
Conversion factor: minutes to seconds (SI units)	: 60 [s/min]

* Refer to page 11 for the typical physical property value of tap water or other circulating fluids.

$$Q = qm \times C \times (T_2 - T_1)$$

$$= \frac{\rho \times qv \times C \times \Delta T}{60} = \frac{1 \times 35 \times 4.186 \times 10^3 \times 3.0}{60}$$

$$= 7325\ [\text{J/s}] \approx 7325\ [\text{W}] = 7.3\ [\text{kW}]$$

Cooling capacity = Considering a safety factor of 20%,

7.3 [kW] x 1.2 = 8.8 [kW]

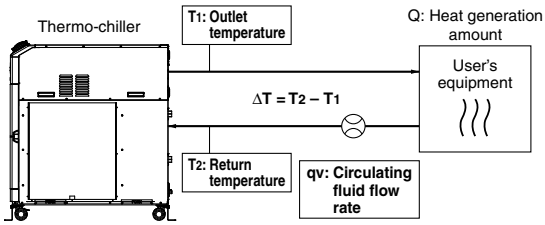

HRS090-A

Example of conventional measurement units (Reference)

Heat generation amount by user's equipment **Q**	: Unknown [cal/h] → [W]
Circulating fluid	: Tap water*
Circulating fluid weight flow rate **qm**	: (= ρ x **qv** x 60) [kgf/h]
Circulating fluid weight volume ratio γ	: 1 [kgf/L]
Circulating fluid (volume) flow rate **qv**	: 35 [L/min]
Circulating fluid specific heat **C**	: 1.0 x 10^3 [cal/(kgf·°C)]
Circulating fluid outlet temperature T_1	: 20 [°C]
Circulating fluid return temperature T_2	: 23 [°C]
Circulating fluid temperature difference ΔT	: 3 [°C] (= $T_2 - T_1$)
Conversion factor: hours to minutes	: 60 [min/h]
Conversion factor: kcal/h to kW	: 860 [(cal/h)/W]

$$Q = \frac{qm \times C \times (T_2 - T_1)}{860}$$

$$= \frac{\gamma \times qv \times 60 \times C \times \Delta T}{860}$$

$$= \frac{1 \times 35 \times 60 \times 1.0 \times 1.0^3 \times 3.0}{860}$$

$$\approx 7325\ [\text{W}] = 7.3\ [\text{kW}]$$

Cooling capacity = Considering a safety factor of 20%,

7.3 [kW] x 1.2 = 8.8 [kW]

Required Cooling Capacity Calculation

Example 3: When there is no heat generation, and when cooling the object below a certain temperature and period of time.

Heat quantity by cooled substance (per unit time) **Q** : Unknown [W] ([J/s])
Cooled substance : Water
Cooled substance mass **m** : (= ρ x **V**) [kg]
Cooled substance density ρ : 1 [kg/L]
Cooled substance total volume **V** : 150 [L]
Cooled substance specific heat **C** : 4.186 x 10^3 [J/(kg·K)]
Cooled substance temperature when cooling begins T_0 : 303 [K] (30 [°C])
Cooled substance temperature after t hour T_t : 293 [K] (20 [°C])
Cooling temperature difference ΔT : 10 [K] (= $T_0 - T_t$)
Cooling time Δt : 900 [s] (= 15 [min])

∗ Refer to the following for the typical physical property values by circulating fluid.

$$Q = \frac{m \times C \times (T_0 \times T_t)}{\Delta t} = \frac{\rho \times V \times C \times \Delta T}{\Delta t}$$

$$= \frac{1 \times 150 \times 4.186 \times 10^3 \times 10}{900} = 6977\ [J/s] \approx 7.0\ [kW]$$

Cooling capacity = Considering a safety factor of 20%,

7.0 [kW] x 1.2 = 8.4 [kW]

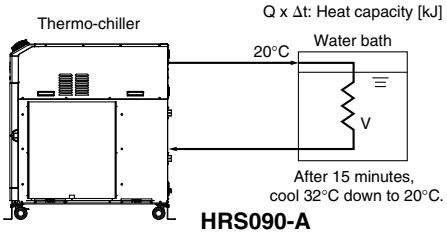

HRS090-A

Example of conventional measurement units (Reference)

Heat quantity by cooled substance (per unit time) **Q** : Unknown [cal/h] → [W]
Cooled substance : Water
Cooled substance weight **m** : (= ρ x **V**) [kgf]
Cooled substance weight volume ratio γ : 1 [kgf/L]
Cooled substance total volume **V** : 150 [L]
Cooled substance specific heat **C** : 1.0 x 10^3 [cal/(kgf·°C)]
Cooled substance temperature when cooling begins T_0 : 30 [°C]
Cooled substance temperature after t hour T_t : 20 [°C]
Cooling temperature difference ΔT : 10 [°C] (= $T_0 - T_t$)
Cooling time Δt : 15 [min]
Conversion factor: hours to minutes : 60 [min/h]
Conversion factor: kcal/h to kW : 860 [(cal/h)/W]

$$Q = \frac{m \times C \times (T_0 - T_t)}{\Delta t \times 860} = \frac{\gamma \times V \times 60 \times C \times \Delta T}{\Delta t \times 860}$$

$$= \frac{1 \times 150 \times 60 \times 1.0 \times 10^3 \times 10}{15 \times 860}$$

$$\approx 6977\ [W] = 7.0\ [kW]$$

Cooling capacity = Considering a safety factor of 20%,

7.0 [kW] x 1.2 = 8.4 [kW]

Note) This is the calculated value by changing the fluid temperature only.
Thus, it varies substantially depending on the water bath or piping shape.

Precautions on Cooling Capacity Calculation

1. Heating capacity

When the circulating fluid temperature is set above room temperature, it needs to be heated by the thermo-chiller. The heating capacity depends on the circulating fluid temperature. Consider the radiation rate and heat capacity of the user's equipment and check beforehand if the required heating capacity is provided.

2. Pump capacity

<Circulating fluid flow rate>

Circulating fluid flow rate varies depending on the circulating fluid discharge pressure. Consider the installation height difference between the thermo-chiller and the user's equipment, and the piping resistance such as circulating fluid pipings, or piping size, or piping curves in the machine. Check beforehand if the required flow is achieved, using the pump capacity curves.

<Circulating fluid discharge pressure>

Circulating fluid discharge pressure has the possibility to increase up to the maximum pressure in the pump capacity curves.
Check beforehand if the circulating fluid pipings or circulating fluid circuit of the user's equipment are fully durable against this pressure.

Circulating Fluid Typical Physical Property Values

1. This catalog uses the following values for density and specific heat in calculating the required cooling capacity.

Density ρ: 1 [kg/L] (or, using conventional unit system, weight volume ratio γ = 1 [kgf/L])
Specific heat **C**: 4.19 x 10^3 [J/(kg·K)] (or, using conventional unit system, 1 x 10^3 [cal/(kgf·°C)])

2. Values for density and specific heat change slightly according to temperature shown below. Use this as a reference.

Water

Physical property value / Temperature	Density ρ [kg/L]	Specific heat C [J/(kg·K)]	Conventional unit system	
			Weight volume ratio γ [kgf/L]	Specific heat C [cal/(kgf·°C)]
41°F [5°C]	1.00	4.2 x 10^3	1.00	1 x 10^3
50 [10]	1.00	4.19 x 10^3	1.00	1 x 10^3
59 [15]	1.00	4.19 x 10^3	1.00	1 x 10^3
68 [20]	1.00	4.18 x 10^3	1.00	1 x 10^3
77 [25]	1.00	4.18 x 10^3	1.00	1 x 10^3
86 [30]	1.00	4.18 x 10^3	1.00	1 x 10^3
95 [35]	0.99	4.18 x 10^3	0.99	1 x 10^3
104 [40]	0.99	4.18 x 10^3	0.99	1 x 10^3

15% Ethylene Glycol Aqueous Solution

Physical property value / Temperature	Density ρ [kg/L]	Specific heat C [J/(kg·K)]	Conventional unit system	
			Weight volume ratio γ [kgf/L]	Specific heat C [cal/(kgf·°C)]
41°F [5°C]	1.02	3.91 x 10^3	1.02	0.93 x 10^3
50 [10]	1.02	3.91 x 10^3	1.02	0.93 x 10^3
59 [15]	1.02	3.91 x 10^3	1.02	0.93 x 10^3
68 [20]	1.01	3.91 x 10^3	1.01	0.93 x 10^3
77 [25]	1.01	3.91 x 10^3	1.01	0.93 x 10^3
86 [30]	1.01	3.91 x 10^3	1.01	0.94 x 10^3
95 [35]	1.01	3.91 x 10^3	1.01	0.94 x 10^3
104 [40]	1.01	3.92 x 10^3	1.01	0.94 x 10^3

Note) The above shown are reference values. Contact circulating fluid supplier for details.

Series HRS090
Specific Product Precautions 1

Be sure to read this before handling. Refer to the back cover for Safety Instructions. For Temperature Control Equipment Precautions, refer to "Handling Precautions for SMC Products" and the Operation Manual on the SMC website, http://www.smcworld.com

Design

⚠ Warning

1. This catalog shows the specifications of a single unit.
1. Check the specifications of the single unit (contents of this catalog) and thoroughly consider the adaptability between the user's system and this unit.
2. Although the protection circuit as a single unit is installed, prepare a drain pan, water leakage sensor, discharge air facility, and emergency stop equipment, depending on the user's operating condition. Also, the user is requested to carry out the safety design for the whole system.

2. When attempting to cool areas that are open to the atmosphere (tanks, pipes), plan your piping system accordingly.
When cooling open-air external tanks, arrange the piping so that there are coil pipes for cooling inside the tanks, and to carry back the entire flow volume of circulating fluid that is released.

3. Use non-corrosive materials for fluid contact parts of circulating fluid.
Using corrosive materials such as aluminum or iron for fluid contact parts such as piping may cause clogging or leakage in the circulating fluid (facility water) circuits. Provide protection against corrosion when you use the product.

4. The facility water outlet temperature (water-cooled type) may increase up to around 140°F [60°C].
When selecting the facility water pipings, consider the suitability for temperature.
Selection

Selection

⚠ Warning

Model selection
For selecting a model of thermo-chiller, it is required to know the heat generation amount of the user's equipment. Obtain the heat generation amount, referring to "Cooling Capacity Calculation" on pages 19 and 20 before selecting a model.
Handling

Handling

⚠ Warning

Thoroughly read the Operation Manual.
Read the Operation Manual completely before operation, and keep this manual available whenever necessary.

Operating Environment / Storage Environment

⚠ Warning

1. Do not use in the following environment as it will lead to a breakdown.
1. Outdoors
2. In locations where water, water vapor, salt water, and oil may splash on the product.
3. In locations where there are dust and particles.
4. In locations where corrosive gases, organic solvents, chemical fluids, or flammable gases are present. (This product is not explosion proof.)
5. In locations where the ambient temperature/humidity exceeds the limits as mentioned below or where condensation occurs.
   During transportation/storage: 5 to 122°F [–15°C to 50°C], 15% to 85% (But as long as water or circulating fluid are not left inside the pipings)
   During operation: 41 to 113°F [5°C to 45°C], 30% to 70% (However, use a 15% ethylene glycol aqueous solution if operating in a place where the ambient temperature or circulating fluid temperature is 50°F [10°C] or less.)
6. In locations where condensation may occur.
7. In locations which receive direct sunlight or radiated heat.
8. In locations where there is a heat source nearby and the ventilation is poor.
9. In locations where temperature substantially changes.
10. In locations where strong magnetic noise occurs.
    (In locations where strong electric fields, strong magnetic fields and surge voltage occur.)
11. In locations where static electricity occurs, or conditions which make the product discharge static electricity.
12. In locations where high frequency occurs.
13. In locations where damage is likely to occur due to lightning.
14. In locations at altitude of 9542 ft [3000 m] or higher (Except during storage and transportation)
    ∗ For altitude of 3280 ft [1000 m] or higher
    Because of lower air density, the heat radiation efficiencies of the devices in the product will be lower in the location at altitude of 1000 m or higher. Therefore, the maximum ambient temperature to use and the cooling capacity will lower according to the descriptions in the table below.
    Select the thermo-chiller considering the descriptions.
    ① Upper limit of ambient temperature: Use the product in ambient temperature of the described value or lower at each altitude.
    ② Cooling capacity coefficient: The product's cooling capacity will lower to one that multiplied by the described value at each altitude.

Altitude ft [m]	①Upper limit of ambient temperature	②Cooling capacity
Less than 3280 [1000]	113°F [45°C]	1.00
Less than 4921 [1500]	108°F [42°C]	0.85
Less than 6562 [2000]	100°F [38°C]	0.80
Less than 8202 [2500]	95°F [35°C]	0.75
Less than 9842 [3000]	90°F [32°C]	0.70

15. In locations where strong impacts or vibrations occur.
16. In locations where a massive force strong enough to deform the product is applied or a weight from a heavy object is applied.
17. In locations where there is not sufficient space for maintenance.
18. Bevelled place
19. Insects or plants may enter the unit.

2. The product is not designed for clean room usage. It generates particles internally.

Series HRS090
Specific Product Precautions 2

Be sure to read this before handling. Refer to the back cover for Safety Instructions. For Temperature Control Equipment Precautions, refer to "Handling Precautions for SMC Products" and the Operation Manual on the SMC website, http://www.smcworld.com

Transportation / Carriage / Movement

⚠ Warning

1. **This product is heavy. Pay attention to safety and position of the product when it is transported, carried and moved.**
2. **Read the Operation Manual carefully to move the product after unpacking.**

⚠ Caution

1. **Never put the product down sideway as this may cause a failure.**
   The product will be delivered in the packaging shown below.

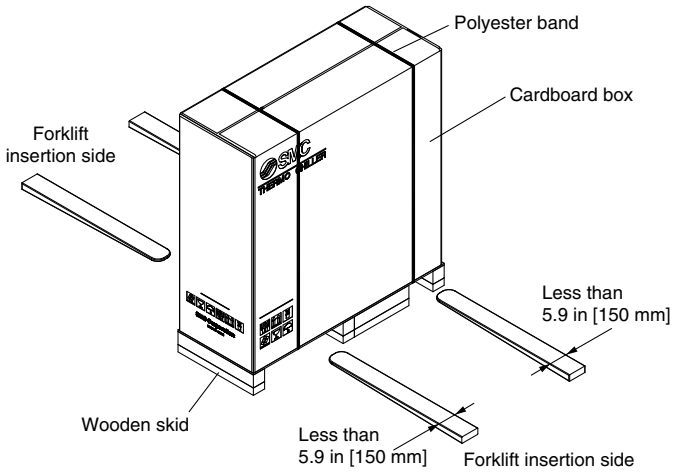

<When packaged>

Model	Weight lbs [kg]	Dimensions inch [mm]
HRS090-A-20/40	359 [163]	Height 50.8 x Width 18.5 x Depth 46.5 [Height 1290 x Width 470 x Depth 1180]
HRS090-W-20/40	333 [151]	

2. Moving with forklift

1. A licensed driver should drive the forklift.
2. Insert the fork to the place specified on the label. The fork should reach through to the other side of the product.
3. Be careful not to bump the fork to the cover panel or piping ports.

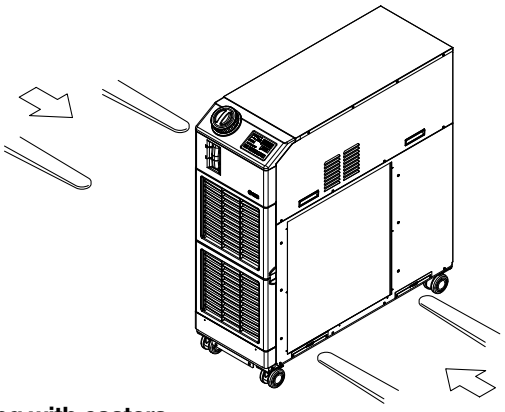

3. Moving with casters

1. This is a heavy product. Make sure this product is lifted by at least two people to avoid falling.
2. Do not grip the piping port on the back side or the handles of the panel.
3. Do not pass over bumps etc. with the casters.

Installation

⚠ Warning

1. **Do not use the product outdoors.**
2. **Do not place heavy objects on top of this product, or step on it.**
   The external panel can be deformed and danger can result.

⚠ Caution

1. **Install on a rigid floor which can withstand this product's weight.**
2. **Refer to the Operation Manual for this product, and secure an installation space that is necessary for the maintenance and ventilation.**
   <Air-cooled refrigeration>
   1. The air-cooled type product exhausts heat using the fan that is mounted to the product. If the product is operated with insufficient ventilation, ambient temperature may exceed 45°C, and this will affect the performance and life of the product. To prevent this ensure that suitable ventilation is available (see below).
   2. For installation indoors, ventilation ports and a ventilation fan should be equipped as needed.

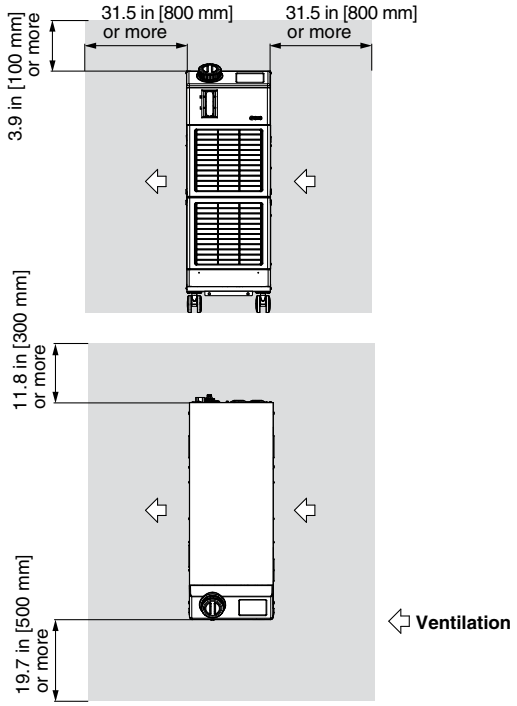

3. If it is impossible to exhaust heat from the installation area indoors, or when the installation area is conditioned, provide a duct for heat exhaustion to the air outlet port of this product for ventilation. Do not mount the inlet of the duct (flange) directly to the air vent of the product, and keep a space larger than the diameter of the duct. Additionally, consider the resistance of the duct when making the air vent port for the duct.

<Heat radiation amount/Required ventilation rate>

Model	Heat	Required ventilation rate ft³/min[m³/min]	
		Differential temp. of 5.4°F [3°C] between inside and outside	Differential temp. of 10.8°F [6°C] between inside and outside of installation
HRS090-A-20/40	17	10241 [290]	5121 [145]

Series HRS090
Specific Product Precautions 3

Be sure to read this before handling. Refer to the back cover for Safety Instructions. For Temperature Control Equipment Precautions, refer to "Handling Precautions for SMC Products" and the Operation Manual on the SMC website, http://www.smcworld.com

Piping

⚠ Caution

1. Regarding the circulating fluid and facility water pipings, consider carefully the suitability for temperature, circulating fluid.
If the operating performance is not sufficient, the pipings may burst during operation. Using corrosive materials such as aluminum or iron for fluid contact parts such as piping may cause clogging or leakage in the circulating fluid and facility water circuits. Provide protection against corrosion when you use the product.

2. Select the piping port size which can exceed the rated flow.
For the rated flow, refer to the pump capacity table.

3. When tightening at the drain port of this product, use a pipe wrench to clamp the connection ports.

4. For the circulating fluid piping connection, install a drain pan and wastewater collection pit just in case the circulating fluid may leak.

5. This product series are constant-temperature fluid circulating machines with built-in tanks.
Do not install equipment on your system side such as pumps that forcibly return the circulating fluid to the unit. Also, if you attach an external tank that is open to the air, it may become impossible to circulate the circulating fluid. Proceed with caution.

Circulating Fluid

⚠ Caution

1. Avoid oil or other foreign objects entering the circulating fluid.

2. When water is used as a circulating fluid, use tap water that conforms to the appropriate water quality standards.
Use tap water that conforms to the standards shown below (including water used for dilution of ethylene glycol aqueous solution).

Tap Water (as Circulating Fluid) Quality Standards

The Japan Refrigeration and Air Conditioning Industry Association
JRA GL-02-1994 "Cooling water system – Circulation type – Make-up water"

	Item	Unit	Standard value	Influence	
				Corrosion	Scale generation
Standard item	pH (at 77°F [25°C])	—	6.0 to 8.0	○	○
	Electric conductivity (25°C)	[μS/cm]	100* to 300*	○	○
	Chloride ion (Cl^-)	[mg/L]	50 or less	○	
	Sulfuric acid ion (SO_4^{2-})	[mg/L]	50 or less	○	
	Acid consumption amount (at pH4.8)	[mg/L]	50 or less		○
	Total hardness	[mg/L]	70 or less		○
	Calcium hardness ($CaCO_3$)	[mg/L]	50 or less		○
	Ionic state silica (SiO_2)	[mg/L]	30 or less		○
Reference item	Iron (Fe)	[mg/L]	0.3 or less	○	○
	Copper (Cu)	[mg/L]	0.1 or less	○	
	Sulfide ion (S_2^-)	[mg/L]	Should not be detected.	○	
	Ammonium ion (NH_4^+)	[mg/L]	0.1 or less	○	
	Residual chlorine (Cl)	[mg/L]	0.3 or less	○	
	Free carbon (CO_2)	[mg/L]	4.0 or less	○	

* In the case of [MΩ·cm], it will be 0.003 to 0.01.
• ○: Factors that have an effect on corrosion or scale generation.
• Even if the water quality standards are met, complete prevention of corrosion is not guaranteed.

3. Use an ethylene glycol aqueous solution that does not contain additives such as preservatives.

4. When using ethylene glycol aqueous solution, maintain a maximum concentration of 15%.
Overly high concentrations can cause a pump overload.
Low concentrations, however, can lead to freezing when circulating fluid temperature is 10°C or lower and cause the thermo-chiller to break down.

Circulating Fluid

⚠ Caution

5. When deionized water is used, the electric conductivity should be 1μS/cm or higher (Electric resistivity: 1 MΩ·cm or lower).

Electrical Wiring

⚠ Warning

Grounding should never be connected to a water line, gas line or lightning rod.

⚠ Caution

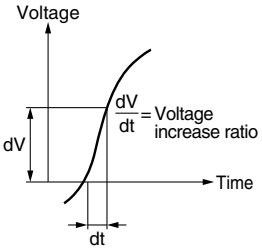

1. Power supply and communication cables should be prepared by user.

2. Provide a stable power supply which is not affected by surge or distortion.
If the voltage increase ratio (dV/dt) at the zero cross should exceed 40 V/200 μsec., it may result in a malfunction.

<For option B [With earth leakage breaker]>

3. This product is installed with a breaker with the following operating characteristics.
For the user's equipment (inlet side), use a breaker whose operating time is equal to or longer than the breaker of this product. If a breaker with shorter operating time is connected, the user's equipment could be cut off due to the inrush current of the motor of this product.

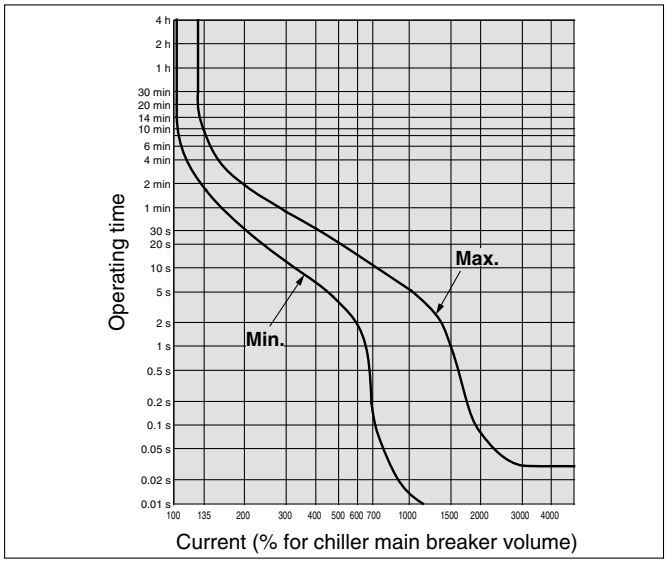

Facility Water Supply

⚠ Warning

<Water-cooled refrigeration>

1. The water-cooled refrigeration type thermo-chiller radiates heat to the facility water. Prepare the facility water system that satisfies the heat radiation and the facility water specifications below.
■ Required facility water system
<Heat radiation amount/Facility water specifications>

Model	Heat radiation	Facility water specifications
HRS090-W□-□	17	Refer to "Facility water system" in the specifications on page 10.

Series HRS090
Specific Product Precautions 4

Be sure to read this before handling. Refer to the back cover for Safety Instructions. For Temperature Control Equipment Precautions, refer to "Handling Precautions for SMC Products" and the Operation Manual on the SMC website, http://www.smcworld.com

Facility Water Supply

⚠ Warning

2. When using tap water as facility water, use tap water that conforms to the appropriate water quality standards.
Use tap water that conforms to the standards shown below.

The Japan Refrigeration and Air Conditioning Industry Association
JRA GL-02-1994 "Cooling water system – Circulation type – Circulating water"

	Item	Unit	Standard value	Influence	
				Corrosion	Scale generation
Standard item	pH (at 77°F [25°F])	—	6.5 to 8.2	○	○
	Electric conductivity (25°C)	[μS/cm]	100* to 800*	○	○
	Chloride ion (Cl^-)	[mg/L]	200 or less	○	
	Sulfuric acid ion (SO_4^{2-})	[mg/L]	200 or less	○	
	Acid consumption amount (at pH4.8)	[mg/L]	100 or less		○
	Total hardness	[mg/L]	200 or less		○
	Calcium hardness ($CaCO_3$)	[mg/L]	150 or less		○
	Ionic state silica (SiO_2)	[mg/L]	50 or less		○
Reference item	Iron (Fe)	[mg/L]	1.0 or less	○	○
	Copper (Cu)	[mg/L]	0.3 or less	○	
	Sulfide ion (S_2^-)	[mg/L]	Should not be detected.	○	
	Ammonium ion (NH_4^+)	[mg/L]	1.0 or less	○	
	Residual chlorine (Cl)	[mg/L]	0.3 or less	○	
	Free carbon (CO_2)	[mg/L]	4.0 or less	○	

* In the case of [MΩ·cm], it will be 0.001 to 0.01.
- ○: Factors that have an effect on corrosion or scale generation.
- Even if the water quality standards are met, complete prevention of corrosion is not guaranteed.

3. Set the supply pressure between 44 to 73 psi [0.3 to 0.5 MPa.] Ensure a pressure difference at the facility water inlet/outlet of 44 psi [0.3 MPa] or more.
If the supply pressure is high, it will cause water leakage. If the supply pressure and pressure difference at the facility water inlet/outlet is low, it will cause an insufficient flow rate of the facility water, and poor temperature control.

Operation

⚠ Warning

1. Confirmation before operation
1) The fluid level of a tank should be within the specified range of H (High) and L (Low). When exceeding the specified level, the circulating fluid will overflow.
2) Remove the air.
Conduct a trial operation, looking at the fluid level.
Since the fluid level will go down when the air is removed from the user's piping system, supply water once again when the fluid level is reduced. When there is no reduction in the fluid level, the job of removing the air is completed.
Pump can be operated independently.

2. Confirmation during operation
- Check the circulating fluid temperature.
The operating temperature range of the circulating fluid is between 41 to 95°F [5 and 35°C].
When the amount of heat generated from the user's equipment is greater than the product's capability, the circulating fluid temperature may exceed this range. Use caution regarding this matter.

3. Emergency stop method
- When an abnormality is confirmed, stop the machine immediately. After stopping operation, disconnect the power supply from the user's equipment.

Operation Restart Time

⚠ Caution

Wait five minutes or more before restarting operation after it has been stopped. If the operation is restarted within five minutes, the protection circuit may activate and the operation may not start properly.

Protection Circuit

⚠ Caution

If operating in the below conditions, the protection circuit will activate and an operation may not be performed or will stop.
- Power supply voltage is not within the rated voltage range of ±10%.
- In case the water level inside the tank is reduced abnormally.
- Circulating fluid temperature is too high.
- Compared to the cooling capacity, the heat generation amount of the user's equipment is too high.
- Ambient temperature is too high. (Check the ambient temperature in the specifications.)
- Ventilation hole is clogged with dust or dirt.

Maintenance

⚠ Caution

<Periodical inspection every one month>
Clean the ventilation hole.
If the dustproof filter of water-cooled type product becomes clogged with dust or debris, a decline in cooling performance can result.
In order to avoid deforming or damaging the dustproof filter, clean it with a long-haired brush or air gun.

<Periodical inspection every three months>
Inspect the circulating fluid.
1. When using tap water or deionized water
- Replacement of circulating fluid
Failure to replace the circulating fluid can lead to the development of bacteria or algae. Replace it regularly depending on your usage conditions.
- Tank cleaning (same as the HRS series)
Consider whether dirt, slime or foreign objects may be present in the circulating fluid inside the tank, and carry out regular cleanings of the tank.

2. When using ethylene glycol aqueous solution
Use a concentration meter to confirm that the concentration does not exceed 15%.
Dilute or add as needed to adjust the concentration.

<Periodical inspection during the winter season>
1. Make water-removal arrangements beforehand.
If there is a risk of the circulating fluid and facility water freezing when the product is stopped, release the circulating fluid and facility water in advance.

2. Consult a professional.
This product has an "anti-freezing function" and "warming-up function." Read the Operation Manual carefully, and if any additional anti-freezing function (e.g. tape heater) is needed, ask for it from the vendor.

⚠ Safety Instructions

These safety instructions are intended to prevent hazardous situations and/or equipment damage. These instructions indicate the level of potential hazard with the labels of **"Caution," "Warning"** or **"Danger."** They are all important notes for safety and must be followed in addition to International Standards (ISO/IEC)*1), and other safety regulations.

⚠ Caution: **Caution** indicates a hazard with a low level of risk which, if not avoided, could result in minor or moderate injury.

⚠ Warning: **Warning** indicates a hazard with a medium level of risk which, if not avoided, could result in death or serious injury.

⚠ Danger : **Danger** indicates a hazard with a high level of risk which, if not avoided, will result in death or serious injury.

*1) ISO 4414: Pneumatic fluid power – General rules relating to systems.
ISO 4413: Hydraulic fluid power – General rules relating to systems.
IEC 60204-1: Safety of machinery – Electrical equipment of machines. (Part 1: General requirements)
ISO 10218-1: Manipulating industrial robots – Safety.
etc.

⚠ Warning

1. The compatibility of the product is the responsibility of the person who designs the equipment or decides its specifications.

Since the product specified here is used under various operating conditions, its compatibility with specific equipment must be decided by the person who designs the equipment or decides its specifications based on necessary analysis and test results. The expected performance and safety assurance of the equipment will be the responsibility of the person who has determined its compatibility with the product. This person should also continuously review all specifications of the product referring to its latest catalog information, with a view to giving due consideration to any possibility of equipment failure when configuring the equipment.

2. Only personnel with appropriate training should operate machinery and equipment.

The product specified here may become unsafe if handled incorrectly. The assembly, operation and maintenance of machines or equipment including our products must be performed by an operator who is appropriately trained and experienced.

3. Do not service or attempt to remove product and machinery/ equipment until safety is confirmed.

1. The inspection and maintenance of machinery/equipment should only be performed after measures to prevent falling or runaway of the driven objects have been confirmed.
2. When the product is to be removed, confirm that the safety measures as mentioned above are implemented and the power from any appropriate source is cut, and read and understand the specific product precautions of all relevant products carefully.
3. Before machinery/equipment is restarted, take measures to prevent unexpected operation and malfunction.

4. Contact SMC beforehand and take special consideration of safety measures if the product is to be used in any of the following conditions.

1. Conditions and environments outside of the given specifications, or use outdoors or in a place exposed to direct sunlight.
2. Installation on equipment in conjunction with atomic energy, railways, air navigation, space, shipping, vehicles, military, medical treatment, combustion and recreation, or equipment in contact with food and beverages, emergency stop circuits, clutch and brake circuits in press applications, safety equipment or other applications unsuitable for the standard specifications described in the product catalog.
3. An application which could have negative effects on people, property, or animals requiring special safety analysis.
4. Use in an interlock circuit, which requires the provision of double interlock for possible failure by using a mechanical protective function, and periodical checks to confirm proper operation.

⚠ Caution

1. The product is provided for use in manufacturing industries.

The product herein described is basically provided for peaceful use in manufacturing industries.
If considering using the product in other industries, consult SMC beforehand and exchange specifications or a contract if necessary.
If anything is unclear, contact your nearest sales branch.

Limited warranty and Disclaimer/ Compliance Requirements

The product used is subject to the following "Limited warranty and Disclaimer" and "Compliance Requirements".
Read and accept them before using the product.

Limited warranty and Disclaimer

1. The warranty period of the product is 1 year in service or 1.5 years after the product is delivered, whichever is first.*2)
   Also, the product may have specified durability, running distance or replacement parts. Please consult your nearest sales branch.
2. For any failure or damage reported within the warranty period which is clearly our responsibility, a replacement product or necessary parts will be provided.
   This limited warranty applies only to our product independently, and not to any other damage incurred due to the failure of the product.
3. Prior to using SMC products, please read and understand the warranty terms and disclaimers noted in the specified catalog for the particular products.

***2) Vacuum pads are excluded from this 1 year warranty.**
A vacuum pad is a consumable part, so it is warranted for a year after it is delivered.
Also, even within the warranty period, the wear of a product due to the use of the vacuum pad or failure due to the deterioration of rubber material are not covered by the limited warranty.

Compliance Requirements

1. The use of SMC products with production equipment for the manufacture of weapons of mass destruction (WMD) or any other weapon is strictly prohibited.
2. The exports of SMC products or technology from one country to another are governed by the relevant security laws and regulations of the countries involved in the transaction. Prior to the shipment of a SMC product to another country, assure that all local rules governing that export are known and followed.

⚠ Caution

SMC products are not intended for use as instruments for legal metrology.

Measurement instruments that SMC manufactures or sells have not been qualified by type approval tests relevant to the metrology (measurement) laws of each country. Therefore, SMC products cannot be used for business or certification ordained by the metrology (measurement) laws of each country.

⚠ Safety Instructions	Be sure to read the "Handling Precautions for SMC Products" (M-E03-3) and "Operation Manual" before use.

Global Manufacturing, Distribution and Service Network

Worldwide Subsidiaries

EUROPE

AUSTRIA
SMC Pneumatik GmbH (Austria)

BELGIUM
SMC Pneumatics N.V./S.A.

BULGARIA
SMC Industrial Automation Bulgaria EOOD

CROATIA
SMC Industrijska Automatika d.o.o.

CZECH
SMC Industrial Automation CZ s.r.o.

DENMARK
SMC Pneumatik A/S

ESTONIA
SMC Pneumatics Estonia

FINLAND
SMC Pneumatics Finland OY

FRANCE
SMC Pneumatique S.A.

GERMANY
SMC Pneumatik GmbH

GREECE
SMC Hellas EPE

HUNGARY
SMC Hungary Ipari Automatizálási Kft.

IRELAND
SMC Pneumatics (Ireland) Ltd.

ITALY
SMC Italia S.p.A.

LATVIA
SMC Pneumatics Latvia SIA

LITHUANIA
SMC Pneumatics Lietuva, UAB

NETHERLANDS
SMC Pneumatics BV

NORWAY
SMC Pneumatics Norway A/S

POLAND
SMC Industrial Automation Polska Sp.z.o.o.

ROMANIA
SMC Romania S.r.l.

RUSSIA
SMC Pneumatik LLC.

SLOVAKIA
SMC Priemyselná Automatizáciá, s.r.o.

SLOVENIA
SMC Industrijska Avtomatika d.o.o.

SPAIN / PORTUGAL
SMC España, S.A.

SWEDEN
SMC Pneumatics Sweden AB

SWITZERLAND
SMC Pneumatik AG

UK
SMC Pneumatics (U.K.) Ltd.

ASIA

CHINA
SMC (China) Co., Ltd.

HONG KONG
SMC Pneumatics (Hong kong) Ltd.

INDIA
SMC Pneumatics (India) Pvt. Ltd.

JAPAN
SMC Corporation

MALAYSIA
SMC Pneumatics (S.E.A.) Sdn. Bhd.

PHILIPPINES
SMC Pneumatics (Philippines), Inc.

SINGAPORE
SMC Pneumatics (S.E.A.) Pte. Ltd.

SOUTH KOREA
SMC Pneumatics Korea Co., Ltd.

TAIWAN
SMC Pneumatics (Taiwan) Co., Ltd.

THAILAND
SMC Thailand Ltd.

NORTH AMERICA

CANADA
SMC Pneumatics (Canada) Ltd.

MEXICO
SMC Corporation (Mexico) S.A. DE C.V.

USA
SMC Corporation of America

SOUTH AMERICA

ARGENTINA
SMC Argentina S.A.

BOLIVIA
SMC Pneumatics Bolivia S.R.L.

BRAZIL
SMC Pneumaticos do Brazil Ltda.

CHILE
SMC Pneumatics (Chile) S.A.

PERU
SMC Corporation Peru S.A.C.

VENEZUELA
SMC Neumatica Venezuela S.A.

OCEANIA

AUSTRALIA
SMC Pneumatics (Australia) Pty. Ltd.

NEW ZEALAND
SMC Pneumatics (N.Z.) Ltd.

U.S. & Canadian Sales Offices

WEST
- Austin
- Dallas
- Los Angeles
- Phoenix
- Portland
- San Francisco

CENTRAL
- Chicago
- Cincinnati
- Cleveland
- Detroit
- Indianapolis
- Milwaukee
- Minneapolis
- St. Louis

EAST
- Atlanta
- Birmingham
- Boston
- Charlotte
- Nashville
- New Jersey
- Rochester
- Tampa

CANADA
- Montreal
- Toronto
- Vancouver
- Windsor

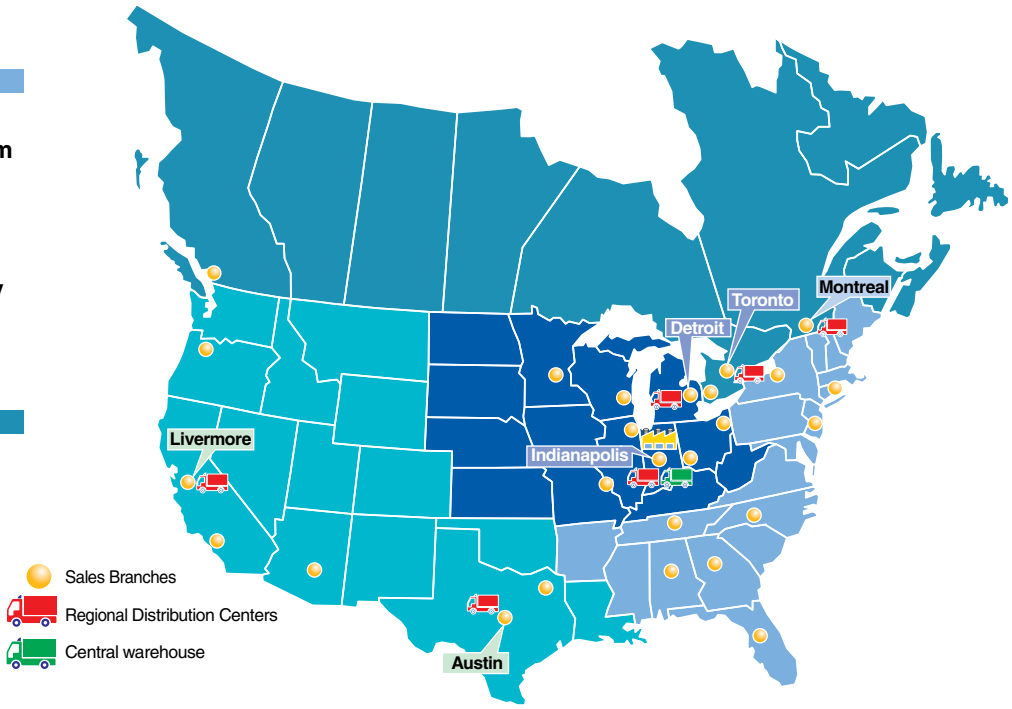

SMC Corporation of America
10100 SMC Blvd., Noblesville, IN 46060
www.smcusa.com

SMC Pneumatics (Canada) Ltd.
www.smcpneumatics.ca

(800) SMC.SMC1 (762-7621)
e-mail: **sales@smcusa.com**
International inquiries: **www.smcworld.com**

© 2016 SMC Corporation of America, All Rights Reserved.

All reasonable efforts to ensure the accuracy of the information detailed in this catalog were made at the time of publishing. However, SMC can in no way warrant the information herein contained as specifications are subject to change without notice.

UO-RRD-2.5M