Magnet Gripper

for Collaborative Robots

Mitsubishi Electric Corporation

collaborative robot

MELFA ASSISTA compliant

MELFA assista

MHM-X7400A-ASSISTA

More information can be viewed here.

P-E20-33

Magnet Gripper
for Collaborative Robots

Mitsubishi Electric Corporation

MELFA ASSISTA compliant

- **Attracts and holds heavy objects with a magnet**
- **Supports workpieces with holes and uneven surfaces**
- **Compact with high holding force**
  - **Holding force: Max. 200 N (ø25, Workpiece thickness 6 mm)**
- **Continues to hold workpieces even when the air is shut off**
- **Operate by simply connecting 1 air supply tube and an electrical wiring M12 connector.**
- **Integrated solenoid valve, auto switch, and piston speed adjustment mechanism**

Component Parts

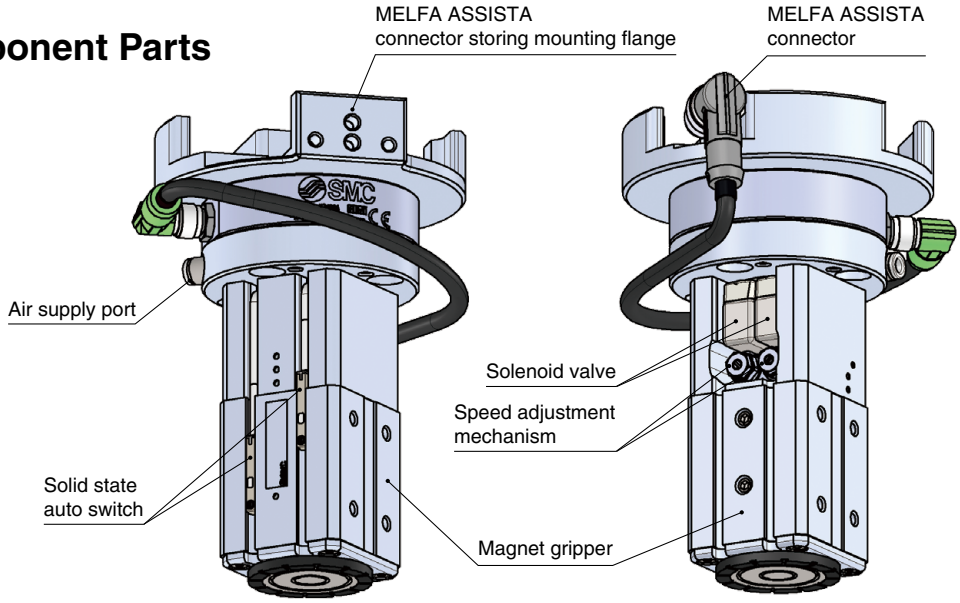

Learn more about the MHM series here.

How to Order

CE RoHS

MHM-25D-X7400A-ASSISTA-P

Auto switch output type

Symbol	Auto switch model	Output type
Nil	D-M9N	NPN
P	D-M9P	PNP

Specifications

Fluid		Air
Action		Double acting
Operating pressure [MPa]		0.2 to 0.6
Proof pressure [MPa]		0.9
Ambient and fluid temperatures [°C]		−10 to 50 (No freezing)
Holding force [N]	Workpiece thickness: 2 mm	160
	Workpiece thickness: 6 mm	200
Residual holding force [N]		0.3 or less
Lubrication		Non-lube
Weight [g]		780
Standards		ISO 9409-1-31.5-4-M5
Auto switch model		D-M9N, D-M9P
Connector type		M12 8-pin connector (Plug)

Included parts: Connector storing flange, Mounting bolt, Positioning pin, Coil tube for piping (ø4), Piping fittings (2 types)

Characteristics

Holding force

The holding force graph shows the theoretical value for low-carbon steel plates. Holding forces vary depending on the material and shape of the workpiece. Please perform a holding test while referring to the value selected based on the graph.

MHM-25

Dimensions

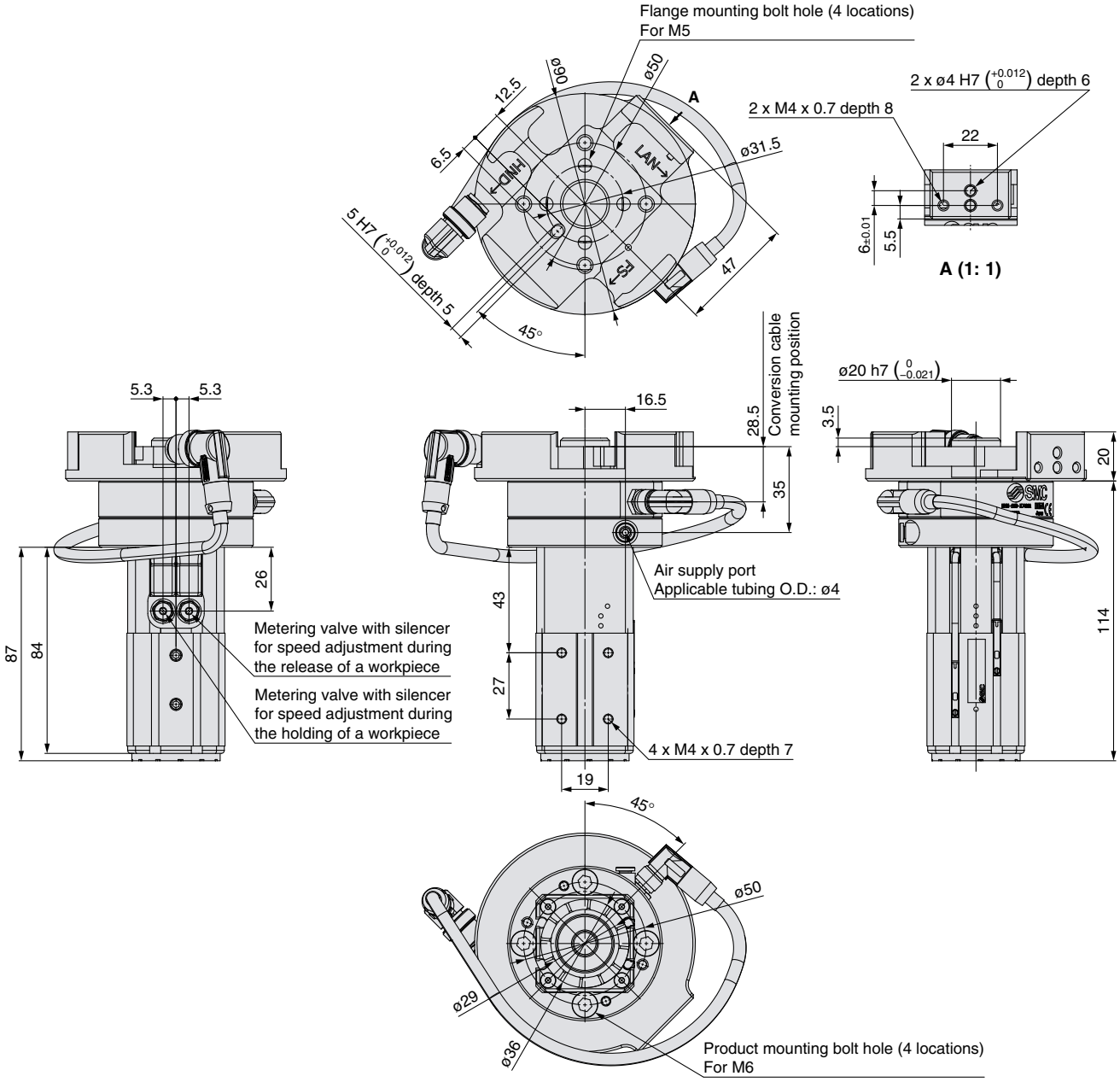

Magnet Gripper

for Collaborative Robots

MELFA assista

⚠ **Safety Instructions** Be sure to read the “Handling Precautions for SMC Products” (M-E03-3) and “Operation Manual” before use.

SMC Corporation

Akihabara UDX 15F,
4-14-1, Sotokanda, Chiyoda-ku, Tokyo 101-0021, JAPAN
Phone: 03-5207-8249 Fax: 03-5298-5362
https://www.smcworld.com

© 2021 SMC Corporation All Rights Reserved

Specifications are subject to change without prior notice
and any obligation on the part of the manufacturer.