# Power Clamp Cylinder

## *CKZ5T Series*

RoHS

## ø40, ø50, ø63, ø80

### A new structure has achieved downsizing. Overall length reduced by 49 mm max.

CKZ3T63 392 mm → CKZ5T63 **343 mm**

### Depth reduced by 17.3 mm max.

CKZ3T63 148.5 mm → CKZ5T63 **131.2 mm**

∗ When a proximity switch (by P&F) is attached

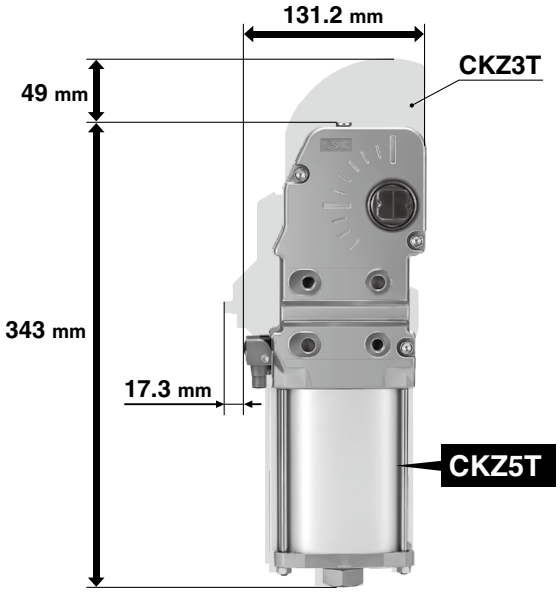


- **Interchangeable with existing product CKZT and CKZ3T in terms of installation**

### Weight reduced by up to 23%

- Aluminum body with greatly reduced weight

CKZ3T63 4.3 kg → CKZ5T63 **3.3 kg**

∗ Arm opening angle: 90°

New **Bore sizes ø40 and ø80 have been added.**

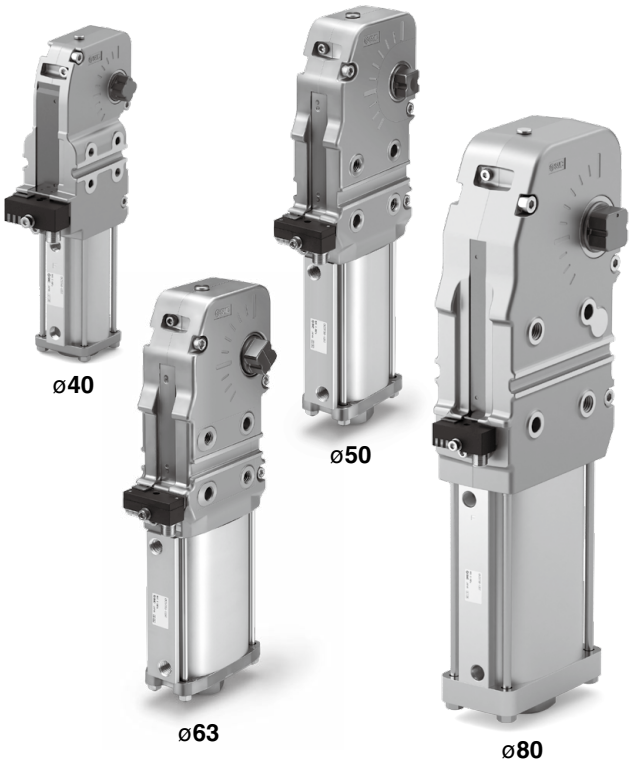


### High clamping force 4000 N

(ø63, Arm length: 100 mm, 0.5 MPa)

### Manual lock release operability has been improved.

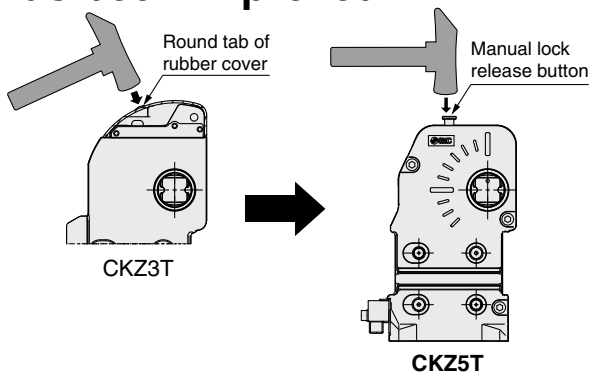


### Spatter-proof construction

Fully enclosed structure by means of an aluminum body

# Power Clamp Cylinder
# *CKZ5T Series*
## ø40, ø50, ø63, ø80

RoHS

## How to Order

### Base type

**CKZ5T 50 [ ] – 90 T**

**Bore size**

| | |
|---|---|
| **40** | ø40 equivalent |
| **50** | ø50 equivalent |
| **63** | ø63 equivalent |
| **80** | ø80 equivalent |

**Cylinder port**

| | |
|---|---|
| **Nil** | G |
| **TN** | NPT |
| **TP** | Rc |

**Arm opening angle**

| Symbol | Arm opening angle |
|---|---|
| **15** | 15° |
| **30** | 30° |
| **45** | 45° |
| **60** | 60° |
| **75** | 75° |
| **90** | 90° |
| **105** | 105° |
| **120** | 120° |
| **135** | 135° |

**Proximity switch**

| | |
|---|---|
| **T** | TURCK |
| **P** | P&F |
| **W** | None |

### Clamp arm

**CKZT 50 – A015 C S**

**Mounted arm**

**Bore size**

| | |
|---|---|
| **40** | ø40 equivalent |
| **50** | ø50 equivalent |
| **63** | ø63 equivalent |
| **80** | ø80 equivalent |

**Offset**

| Symbol | Bore size | Offset |
|---|---|---|
| **A015** | 40, 50, 63 | 15 |
| | 80 | 20 |
| **A045** | 40, 50, 63, 80 | 45 |

**Mounting hole**

| Symbol | Bore size | $D_1$ | $D_2$ |
|---|---|---|---|
| **S** | 40 | 6 | 7 |
| | 50, 63, 80 | 6 | 9 |
| **B**∗1 | 40, 50, 63, 80 | 8 | 10.2 |

∗1 Only A045 (offset 45) is available for bore size 40, mounting hole "B."

**Arm mounting position**

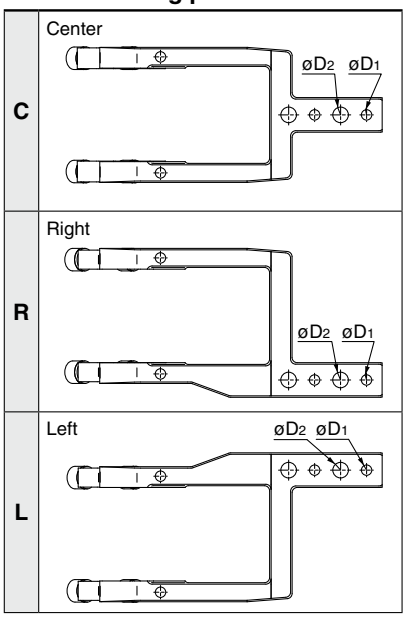

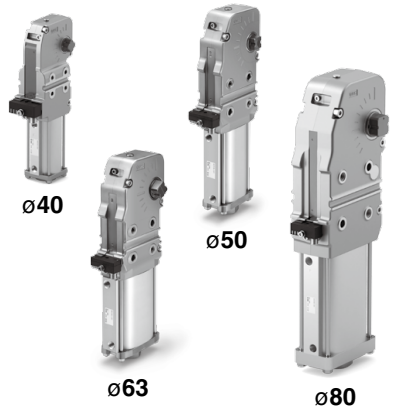


## Cylinder Specifications

| Bore size | 40 | 50 | 63 | 80 |
|---|---|---|---|---|
| **Action** | Double acting | | | |
| **Fluid** | Air | | | |
| **Proof pressure** | 0.9 MPa | | | |
| **Max. operating pressure** | 0.6 MPa | | | |
| **Min. operating pressure** | 0.3 MPa | | | |
| **Ambient and fluid temperatures** | –10 to 60°C (No freezing) | | | |
| **Cushion** | Clamping side: None<br>Unclamping side: Rubber bumper | | | |
| **Operating time** | Clamping: 1 s or more, Unclamping: 1 s or more | | | |
| **Max. allowable holding moment**∗1 | 380 N·m | 800 N·m | 1500 N·m | 2500 N·m |

∗1 Refer to the maximum holding force (torque) while clamped with the operating air exhausted. This is not the possible holding force (torque) for normal use.

## Weight (Cylinder Without Clamp Arm)

[kg]

| Bore size | Arm opening angle | | | | | | | | |
|---|---|---|---|---|---|---|---|---|---|
| | 15° | 30° | 45° | 60° | 75° | 90° | 105° | 120° | 135° |
| **40** | 1.4 | 1.4 | 1.4 | 1.4 | 1.4 | 1.4 | 1.4 | 1.4 | 1.4 |
| **50** | 2.9 | 2.9 | 2.9 | 2.9 | 2.8 | 2.8 | 2.8 | 2.8 | 2.8 |
| **63** | 3.4 | 3.4 | 3.4 | 3.3 | 3.3 | 3.3 | 3.3 | 3.3 | 3.3 |
| **80** | 9.0 | 8.9 | 8.9 | 8.8 | 8.8 | 8.7 | 8.7 | 8.6 | 8.6 |

## Cylinder Stroke

[mm]

| Bore size | Arm opening angle | | | | | | | | |
|---|---|---|---|---|---|---|---|---|---|
| | 15° | 30° | 45° | 60° | 75° | 90° | 105° | 120° | 135° |
| **40** | 18.5 | 26.3 | 32.8 | 39.1 | 45.4 | 51.8 | 57.9 | 63.1 | 66.8 |
| **50** | 22.9 | 32.5 | 40.6 | 48.4 | 56.4 | 64.5 | 72.4 | 79.4 | 84.4 |
| **63** | 22.9 | 32.5 | 40.6 | 48.4 | 56.4 | 64.5 | 72.4 | 79.4 | 84.4 |
| **80** | 35.5 | 49.8 | 61.9 | 73.6 | 85.7 | 98.2 | 110.5 | 121.6 | 129.8 |

## Proximity Switch Specifications

| Manufacturer | TURCK | P&F |
|---|---|---|
| **Power supply voltage** | 10 to 30 VDC | 10 to 30 VDC |
| **Output** | N.O., PNP | N.O., PNP |
| **Continuous load current** | 150 mA | 100 mA |
| **Response frequency** | 30 Hz | 25 Hz |
| **Housing material** | PBT | PA6, PBT |
| **Output indication** | Clamping side: Red<br>Unclamping side: Yellow | Clamping side: Red<br>Unclamping side: Yellow |
| **Power supply indication** | Green | Green |
| **Connector** | M12 connector | M12 connector |

∗ Switch specifications correspond to the manufacturers' technical information.

### Wiring Diagram (PNP Connection Circuit)

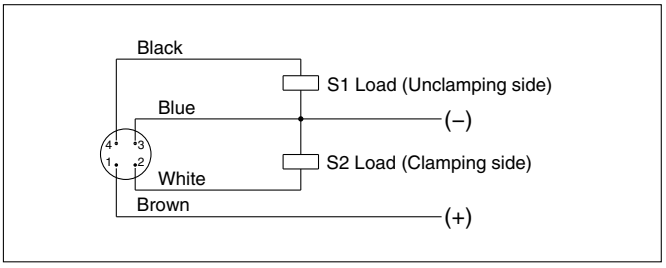


∗ Applicable to both TURCK and P&F
∗ NPN specifications are made to order

## Replacement Parts

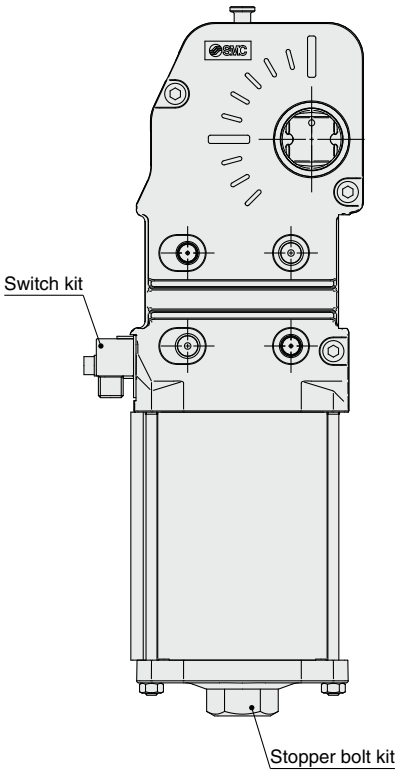


### Switch Kit No.

**CKZ5 – S0 63 T**

| Bore size | |
|---|---|
| 40 | ø40 equivalent |
| 63 | ø50, ø63 equivalent |
| 80 | ø80 equivalent |

| Proximity switch | |
|---|---|
| T | TURCK |
| P | P&F |
| W | None |

∗ The switch kit includes mounting brackets.

### Stopper Bolt Kit No.

**CKZ5 – B0 63 D**

| Bore size | |
|---|---|
| 40 | ø40 equivalent |
| 63 | ø50, ø63 equivalent |
| 80 | ø80 equivalent |

| Arm opening angle | |
|---|---|
| J | 15° |
| H | 30° |
| G | 45° |
| F | 60° |
| E | 75° |
| D | 90° |
| C | 105° |
| B | 120° |
| A | 135° |

∗ The stopper bolt kit includes a stopper bolt and an O-ring seal.

### Conversion Mounting Plate No.

**CKZ5 – P040**

∗ This is a conversion mounting plate for the CKZ5T40 (plate thickness: 2 mm). It allows for an existing CKZT40 (mounting width: 54 mm) to be replaced with a CKZ5T40 (mounting width: 50 mm).

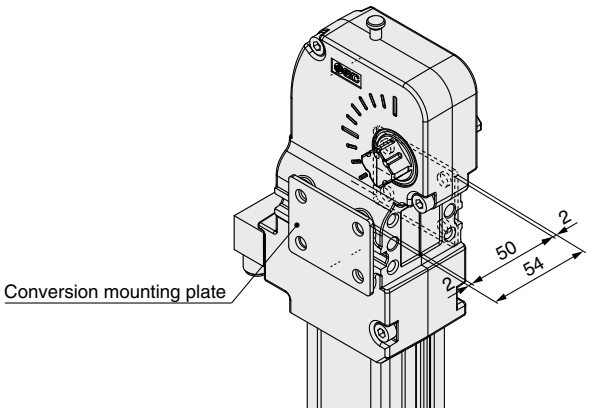

## Dimensions

### CKZ5T40-□

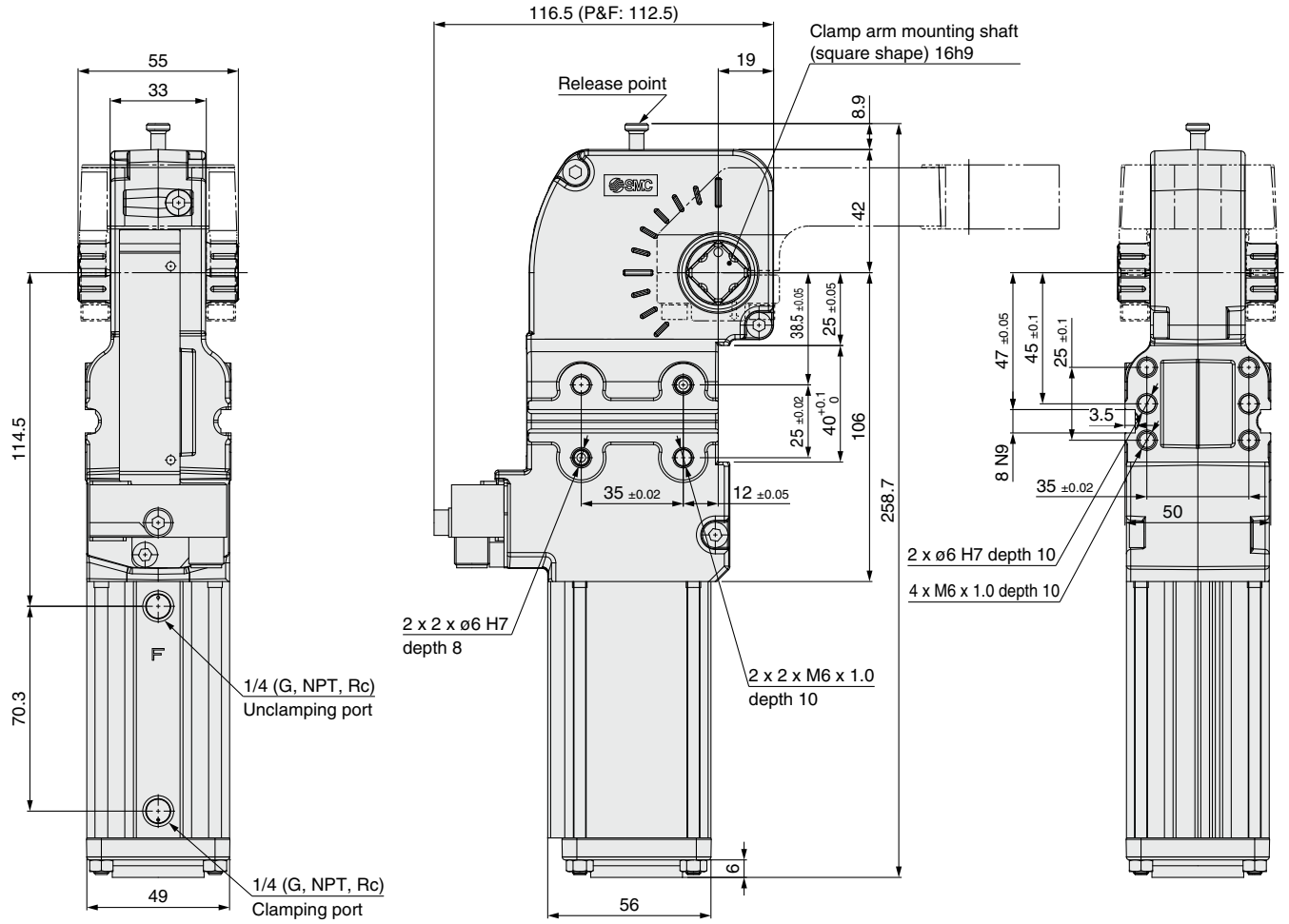

## Dimensions

### CKZ5T50/63/80-□

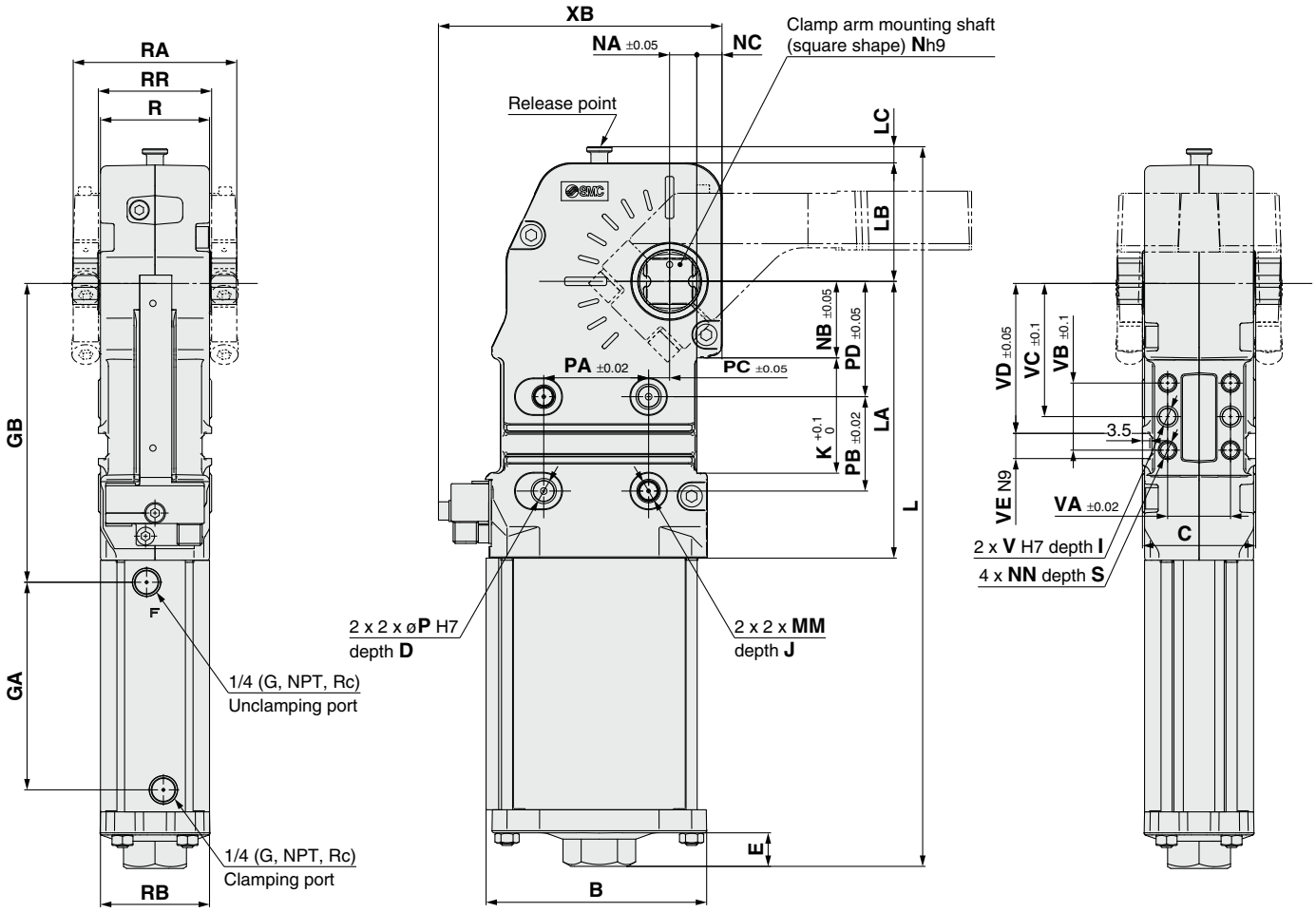


[mm]

| Bore size | B | C | D | E | GA | GB | I | J | K | L | LA | LB | LC | MM | N | NA | NB | NC | NN |
|---|---|---|---|---|---|---|---|---|---|---|---|---|---|---|---|---|---|---|---|
| **50** | 86 | 48 | 12 | 16 | 99 | 142.5 | 10 | 12 | 55 | 343 | 132 | 56.5 | 7.7 | M10 x 1.5 | 19 | 13 | 36.5 | 9.5 | M8 x 1.25 |
| **63** | 105 | 54 | 12 | 16 | 99 | 142.5 | 10 | 12 | 55 | 343 | 132 | 56.5 | 7.7 | M10 x 1.5 | 22 | 13 | 36.5 | 12 | M8 x 1.25 |
| **80** | 132.5 | 76 | 18 | 15 | 141 | 200.5 | 12 | 18 | 80 | 478 | 190 | 80 | 10.7 | M12 x 1.75 | 30 | 21 | 50 | 15 | M10 x 1.5 |

| Bore size | P | PA | PB | PC | PD | R | RA | RB | RR | S | V | VA | VB | VC | VD | VE | XB | |
|---|---|---|---|---|---|---|---|---|---|---|---|---|---|---|---|---|---|---|
| | | | | | | | | | | | | | | | | | With TURCK switch | With P&F switch |
| **50** | 10 | 50 | 45 | 10 | 55 | 46.6 | 68 | 47 | 48 | 11 | 8 | 30 | 32 | 63.5 | 71.5 | 12 | 132.7 | 128.7 |
| **63** | 10 | 50 | 45 | 10 | 55 | 52 | 78 | 52 | 54 | 11 | 8 | 30 | 32 | 63.5 | 71.5 | 12 | 135.2 | 131.2 |
| **80** | 12 | 70 | 75 | 15 | 65 | 72 | 108 | 70 | 76 | 15 | 8 | 50 | 50 | 90 | 96.5 | 12 | 178.6 | 174.6 |

## Dimensions: Clamp Arm Bore Size 40

### Offset 15

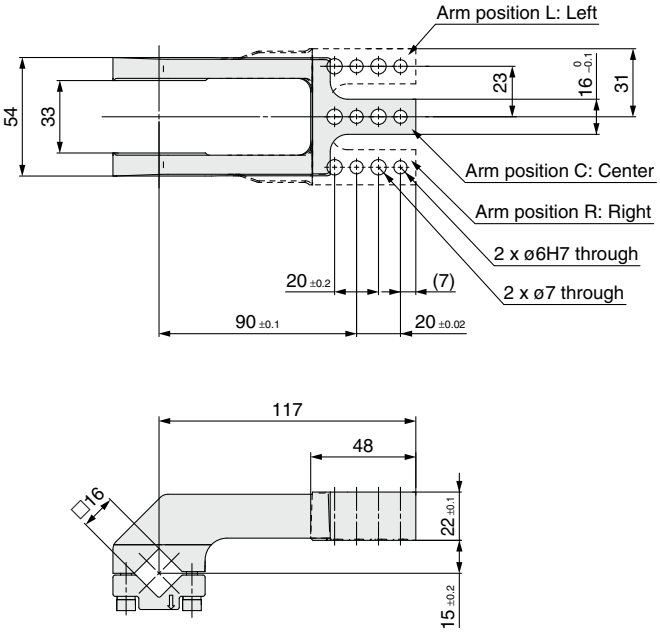


**How to Order**

**CKZT40 − A015 C S**

**Arm position**

| | |
|---|---|
| C | Center |
| R | Right |
| L | Left |

**Weight**

| | |
|---|---|
| CKZT40-A015CS | 0.49 kg |
| CKZT40-A015RS | 0.51 kg |
| CKZT40-A015LS | 0.51 kg |

### Offset 45

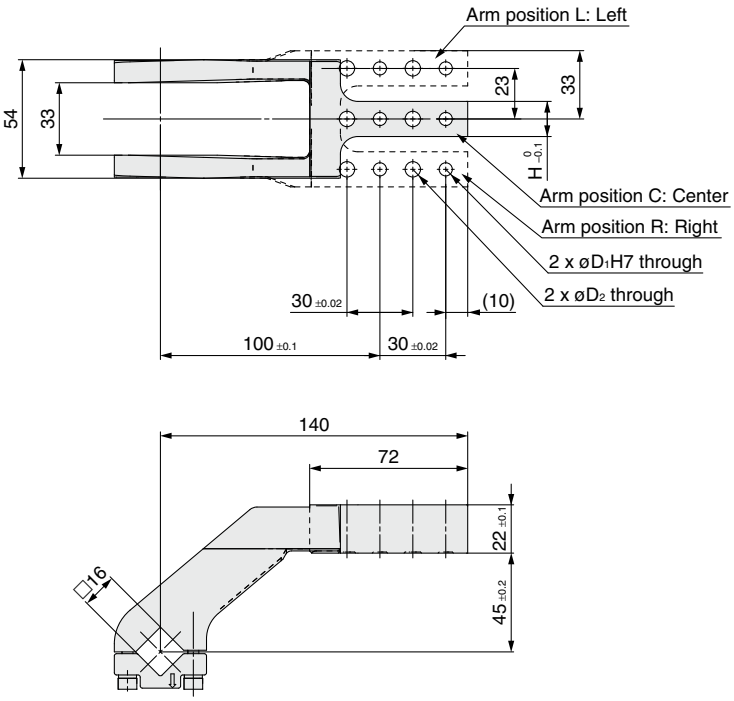


**How to Order**

**CKZT40 − A045 C S**

**Arm position**

| | |
|---|---|
| C | Center |
| R | Right |
| L | Left |

**Mounting hole**

| Symbol | $D_1$ | $D_2$ | H |
|---|---|---|---|
| S | 6 | 7 | 16 |
| B | 8 | 10.2 | 20 |

**Weight**

| | |
|---|---|
| CKZT40-A045CS | 0.63 kg |
| CKZT40-A045CB | 0.64 kg |
| CKZT40-A045RS | 0.64 kg |
| CKZT40-A045RB | 0.66 kg |
| CKZT40-A045LS | 0.64 kg |
| CKZT40-A045LB | 0.66 kg |

## Dimensions: Clamp Arm Bore Size 50

### Offset 15 mm

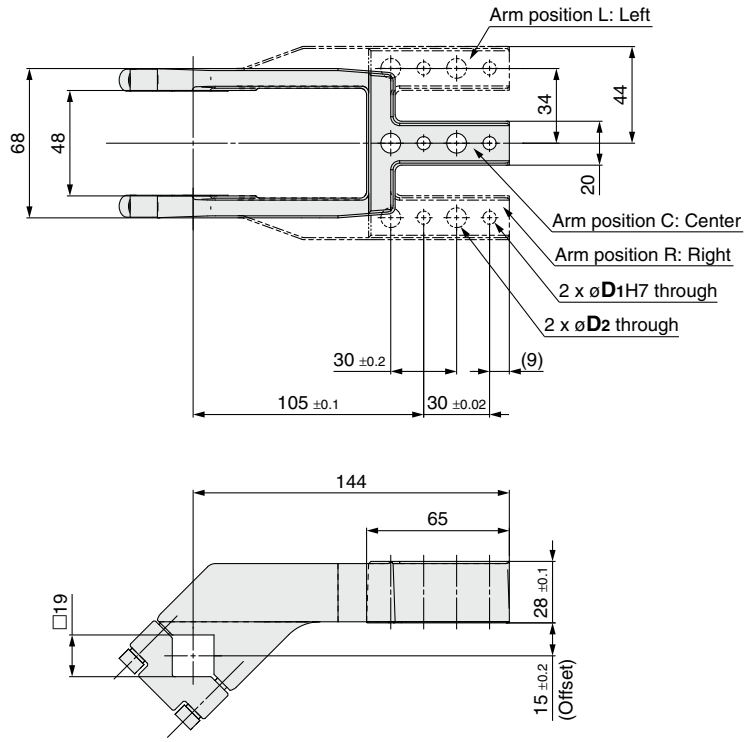


**How to Order**

**CKZT50−A015 C S**

**Arm position**

| | |
|---|---|
| C | Center |
| R | Right |
| L | Left |

**Mounting hole**

| Symbol | $D_1$ | $D_2$ |
|---|---|---|
| S | 6 | 9 |
| B | 8 | 10.2 |

**Weight**

| | |
|---|---|
| CKZT50-A015CS | 0.8 kg |
| CKZT50-A015CB | 0.8 kg |
| CKZT50-A015RS | 0.9 kg |
| CKZT50-A015RB | 0.9 kg |
| CKZT50-A015LS | 0.9 kg |
| CKZT50-A015LB | 0.9 kg |

### Offset 45 mm

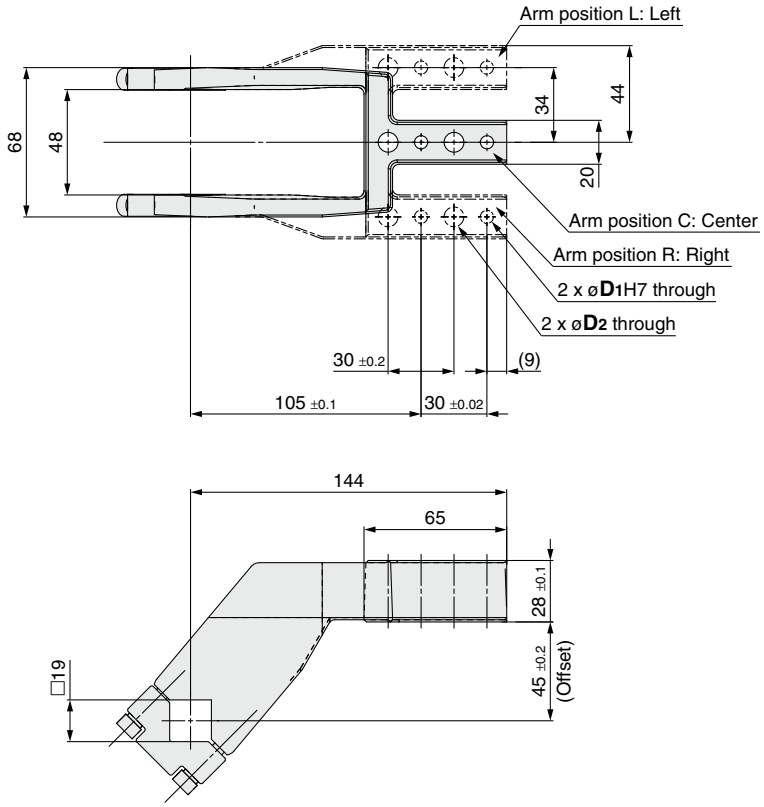


**How to Order**

**CKZT50−A045 C S**

**Arm position**

| | |
|---|---|
| C | Center |
| R | Right |
| L | Left |

**Mounting hole**

| Symbol | $D_1$ | $D_2$ |
|---|---|---|
| S | 6 | 9 |
| B | 8 | 10.2 |

**Weight**

| | |
|---|---|
| CKZT50-A045CS | 0.9 kg |
| CKZT50-A045CB | 0.9 kg |
| CKZT50-A045RS | 1.0 kg |
| CKZT50-A045RB | 1.0 kg |
| CKZT50-A045LS | 1.0 kg |
| CKZT50-A045LB | 1.0 kg |

## Dimensions: Clamp Arm Bore Size 63

### Offset 15 mm

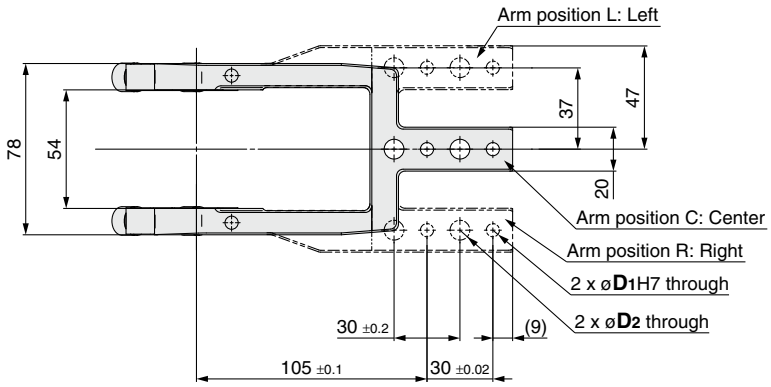


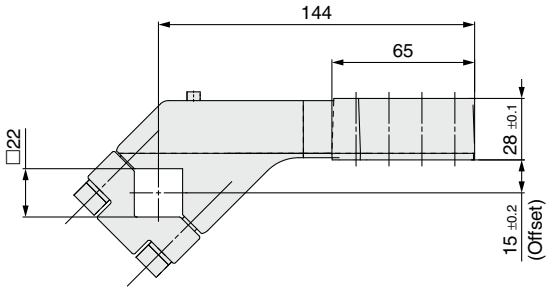


### How to Order

**CKZT63 − A015 C S**

**Arm position**

| | |
|---|---|
| C | Center |
| R | Right |
| L | Left |

**Mounting hole**

| Symbol | $D_1$ | $D_2$ |
|---|---|---|
| S | 6 | 9 |
| B | 8 | 10.2 |

**Weight**

| | |
|---|---|
| CKZT63-A015CS | 1.0 kg |
| CKZT63-A015CB | 1.0 kg |
| CKZT63-A015RS | 1.1 kg |
| CKZT63-A015RB | 1.1 kg |
| CKZT63-A015LS | 1.1 kg |
| CKZT63-A015LB | 1.1 kg |

### Offset 45 mm

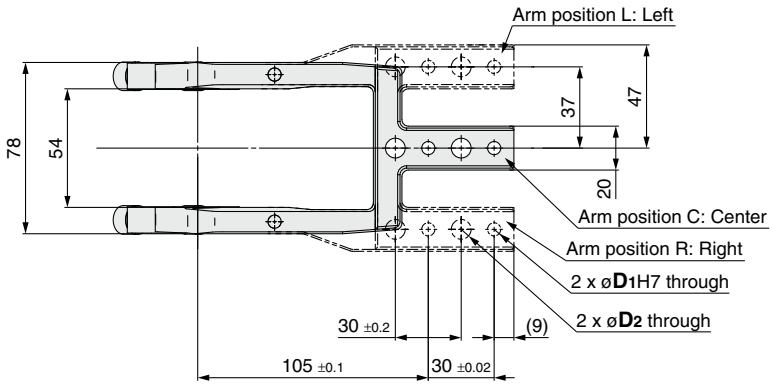


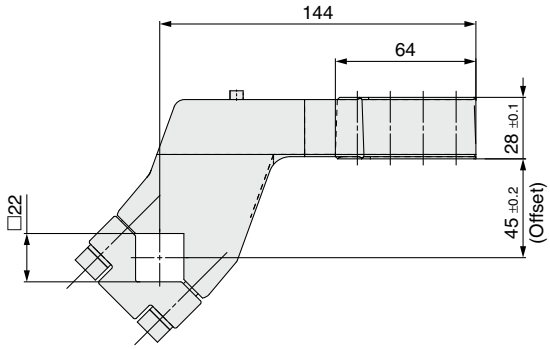


### How to Order

**CKZT63 − A045 C S**

**Arm position**

| | |
|---|---|
| C | Center |
| R | Right |
| L | Left |

**Mounting hole**

| Symbol | $D_1$ | $D_2$ |
|---|---|---|
| S | 6 | 9 |
| B | 8 | 10.2 |

**Weight**

| | |
|---|---|
| CKZT63-A045CS | 1.2 kg |
| CKZT63-A045CB | 1.2 kg |
| CKZT63-A045RS | 1.3 kg |
| CKZT63-A045RB | 1.2 kg |
| CKZT63-A045LS | 1.3 kg |
| CKZT63-A045LB | 1.2 kg |

## Dimensions: Clamp Arm Bore Size 80

### Offset 20

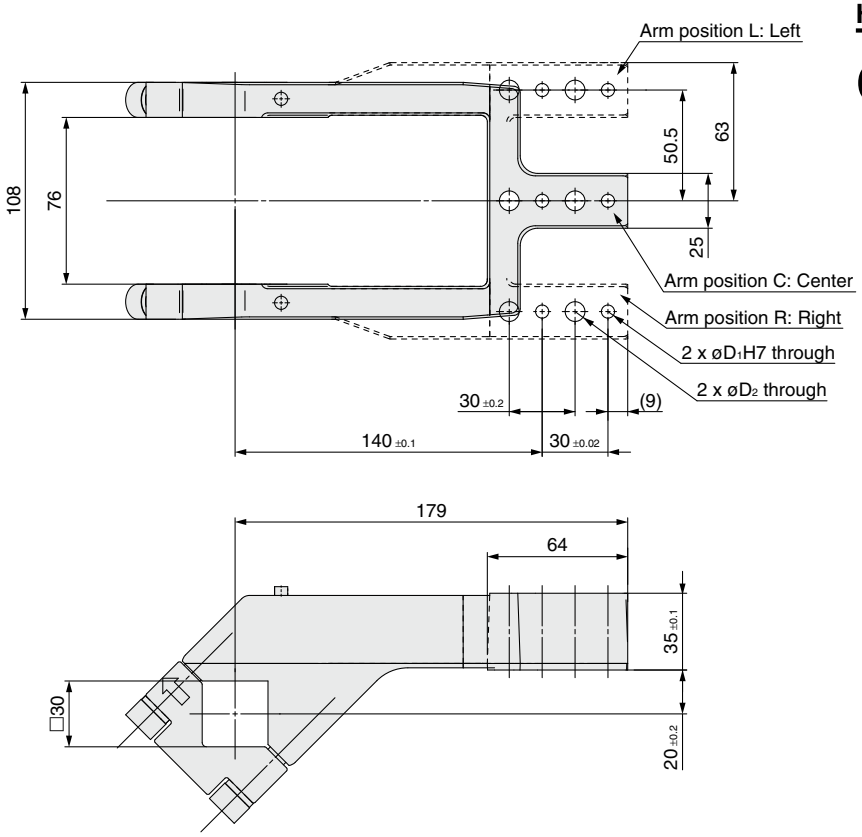


**How to Order**

**CKZT80 − A015 C S**

**Arm position**

| | |
|---|---|
| C | Center |
| R | Right |
| L | Left |

**Mounting hole**

| Symbol | $D_1$ | $D_2$ |
|---|---|---|
| S | 6 | 9 |
| B | 8 | 10.2 |

**Weight**

| | |
|---|---|
| CKZT80-A015CS | 2.17 kg |
| CKZT80-A015CB | 2.16 kg |
| CKZT80-A015RS | 2.21 kg |
| CKZT80-A015RB | 2.19 kg |
| CKZT80-A015LS | 2.21 kg |
| CKZT80-A015LB | 2.19 kg |

### Offset 45

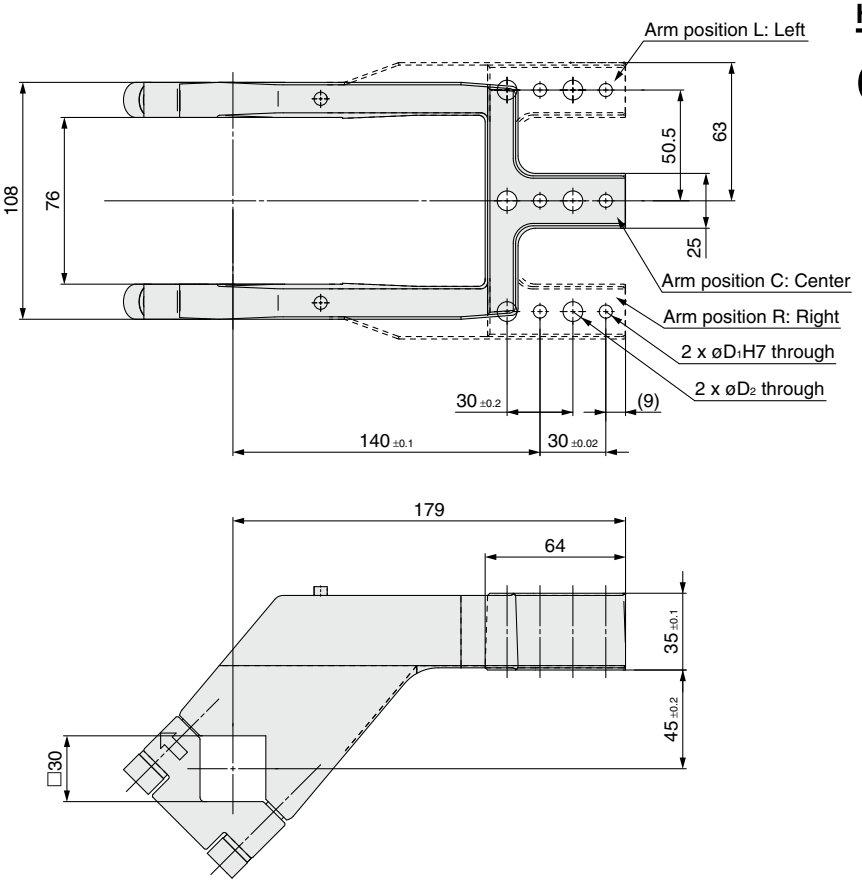


**How to Order**

**CKZT80 − A045 C S**

**Arm position**

| | |
|---|---|
| C | Center |
| R | Right |
| L | Left |

**Mounting hole**

| Symbol | $D_1$ | $D_2$ |
|---|---|---|
| S | 6 | 9 |
| B | 8 | 10.2 |

**Weight**

| | |
|---|---|
| CKZT80-A045CS | 2.46 kg |
| CKZT80-A045CB | 2.44 kg |
| CKZT80-A045RS | 2.61 kg |
| CKZT80-A045RB | 2.59 kg |
| CKZT80-A045LS | 2.61 kg |
| CKZT80-A045LB | 2.59 kg |

# *CKZ5T Series*
# Model Selection

## Relation between arm length and clamping force

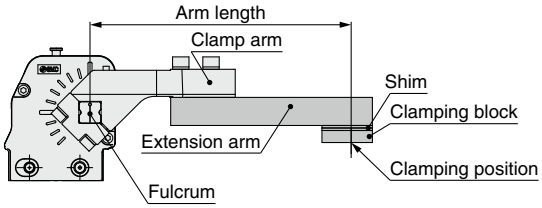


### Bore Size: 40

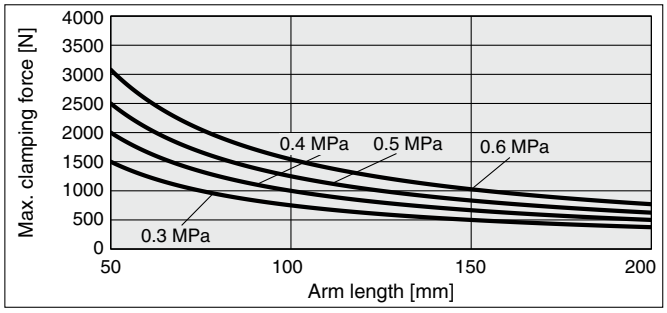


### Bore Size: 50

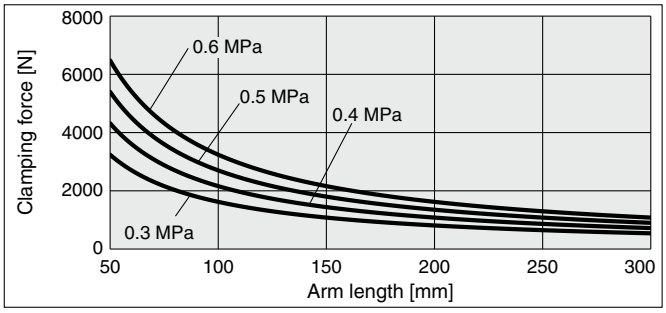


### Bore Size: 63

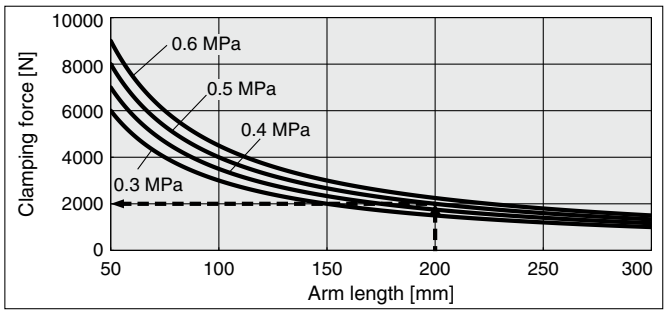


**Calculation example**

**Bore size: 63, Arm length: 200 mm, Operating pressure: 0.5 MPa**

With an arm length of 200 mm and an operating pressure of 0.5 MPa, according to the graph, the maximum clamping force is 2000 N.

### Bore Size: 80

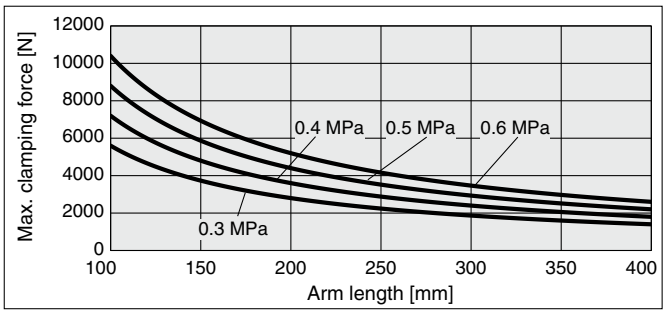


## Allowable arm length

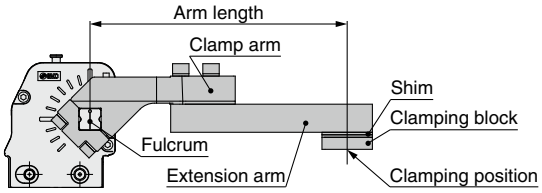


[mm]

| Bore size | Allowable arm length |
|---|---|
| **40** | 200 |
| **50** | 300 |
| **63** | 300 |
| **80** | 400 |

## Allowable load mass

The allowable load mass changes depending on the arm opening angle.
Be sure to use the product within the allowable values shown in the graph below.

∗ The load indicates the total weight of the clamp arm, extension arm, and clamping block.
∗ When the operating time is 1 second

**Calculation procedure for allowable load mass**

① Calculate the distance **L** from the fulcrum to the load center of gravity.
② Check the arm opening angle of the product.
③ Read the allowable load mass from the graph.

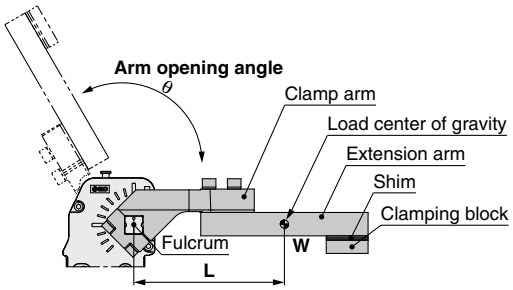


### Bore Size: 40

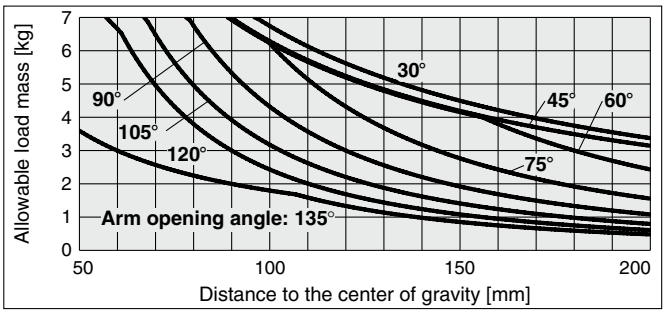


### Bore Size: 50

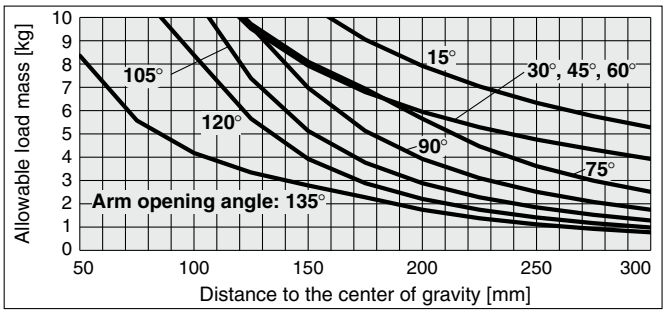


### Bore Size: 63

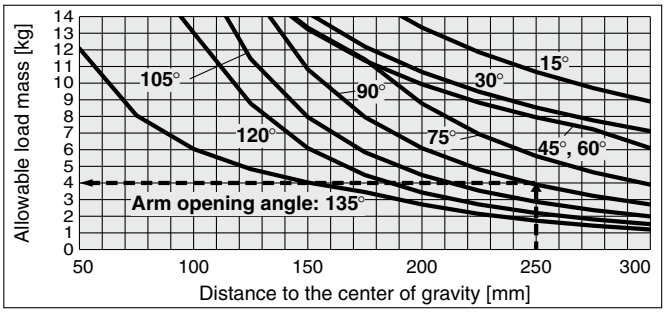


**Calculation example**

**Bore size: 63, Arm opening angle: 90°, Distance to the center of gravity L: 250 mm**

With an arm opening angle of 90° and a 250 mm distance to the center of gravity, according to the graph, the maximum allowable load mass is 4.0 kg.

### Bore Size: 80

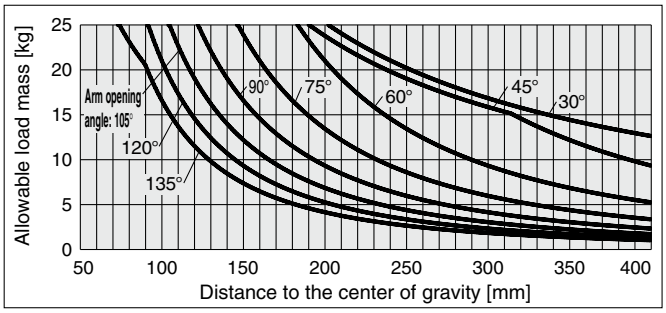

# *CKZ5T Series*
# Setup Procedure

## Precautions

1) Refer to the table below for the clamp arm tightening torque. Refer to pages 43 and 44 for details on the clamp arm.

**Tightening torque of the clamp arm**

| Bore size | Tightening torque [N·m] |
|---|---|
| **40** | 6 to 9 |
| **50** | 12 to 15 |
| **63** | 15 to 20 |
| **80** | 18 to 24 |

2) There is a mechanical difference of −0.25° to +0.25° at the clamping end as shown in Figure 1. Be sure to make adjustments externally using a shim. Refer to page 48.
3) Be sure to use a speed controller, and make adjustments according to the following conditions.
   **Unclamping to clamping: 1 second or more**
   **Clamping to unclamping: 1 second or more**
   If excessive kinetic energy is applied, there is a possibility of damage.
4) When using a side guide (Figure 2):
   Attach the side guide so that lateral loads, such as galling, etc., are not applied to the clamp arm.

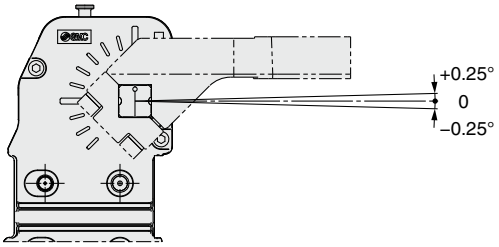


**Figure 1**

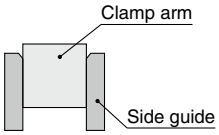


**Figure 2**

## Power clamp cylinder mounting and setup procedure

### <Ex. 1 When using clamping force only: When equipped with a workpiece receptacle>

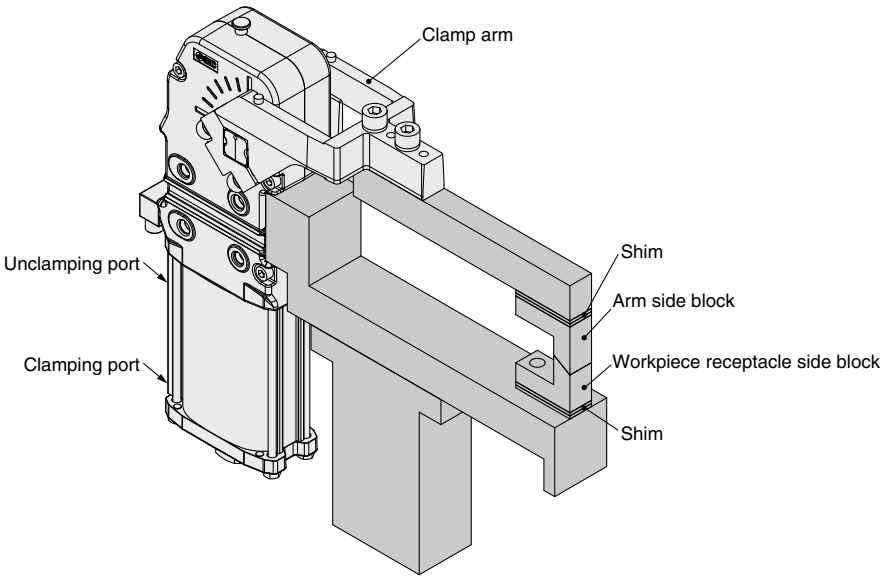


### ■ Procedure

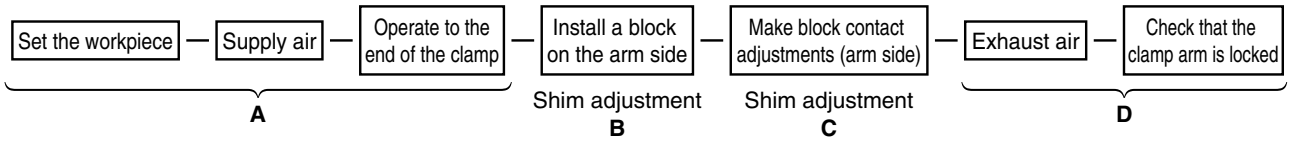


A) Place the workpiece, supply air to the clamping port without attaching the block on the arm side, and operate the clamp arm to the end of the clamp.
B) In the state of A), attach the workpiece and the arm side block, and adjust the shim so that there is a space of about 0 mm.
   During this step, theoretically, there is no clamping force pressing down on the workpiece.
C) In order to generate a clamping force from the state described in step B), insert an additional shim.
   The thickness of the shim changes depending on the arm length and the operating pressure. Refer to page 48.
   Please note that the graph should only be used as a guide as there is a tolerance of about 10% in the clamp cylinder body.
D) Exhaust the air while in the clamped state, and confirm that the clamp arm does not open.

## Power clamp cylinder mounting and setup procedure

### <Ex. 2 When using a hard stop: When not equipped with a workpiece receptacle>

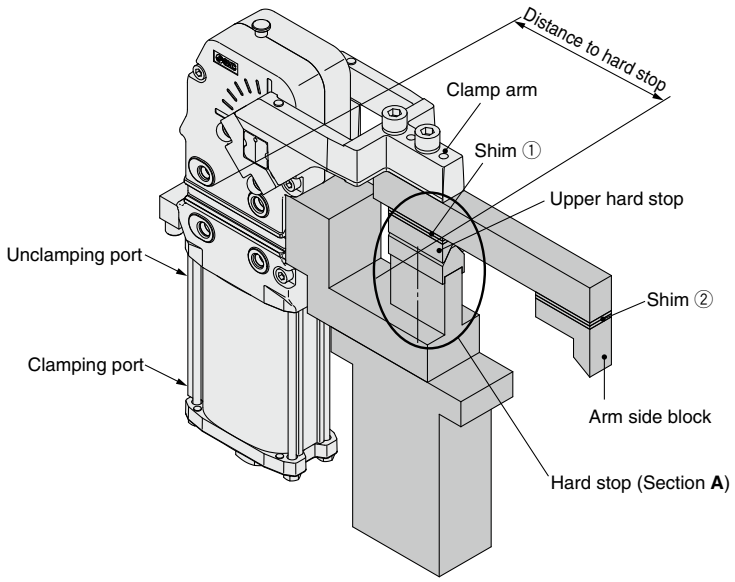


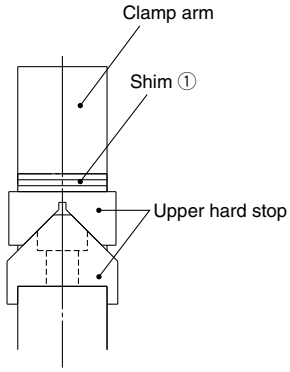


**Section A details**

### ■ Procedure

Set the hard stop — Supply air — Operate to the end of the clamp — Install the upper hard stop — Make upper hard stop contact adjustments — Set the workpiece — Make block contact adjustments (arm side) — Exhaust air — Check that the clamp arm is locked

**A** | Shim adjustment **B** | Shim adjustment **C** | Shim adjustment **D** | **E**

A) Supply air to the clamping port without installing the upper hard stop, and operate the clamp arm to the end of the clamp.

B) In the state of A), attach the upper hard stop and adjust shim ① so that there is a space of about 0 mm between the upper hard stop and the hard stop.
During this step, theoretically, there is no clamping force applied to the hard stop.

C) In order to generate a clamping force from the state described in step B), insert an additional shim ①.
The thickness of the shim changes depending on the distance to the hard stop and the operating pressure. Refer to page 48, and consider the distance to the hard stop as the arm length.
Please note that the graph should only be used as a guide as there is a tolerance of about 10% in the clamp cylinder body.

D) In the state of C), adjust shim ② so that the arm side block contacts the workpiece.

E) Exhaust the air while in the clamped state, and confirm that the clamp arm does not open.

## Relation between shim thickness and clamping force

∗ Use this figure as a guide as there is a tolerance of about 10% in the clamp cylinder body.

∗ When a shim exceeding the peak clamping force position on the graph is inserted, the lock will not be activated when clamped. Insert a shim of the appropriate thickness.

∗1 The arm length indicates the distance between the clamp arm shaft and the clamping position.

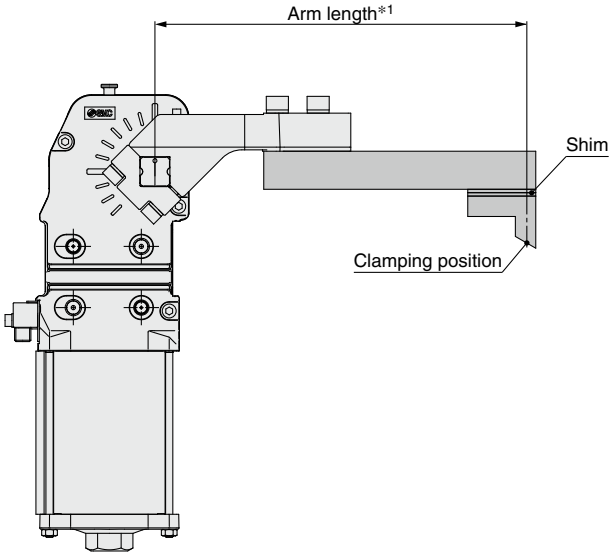


**Bore Size: 40**

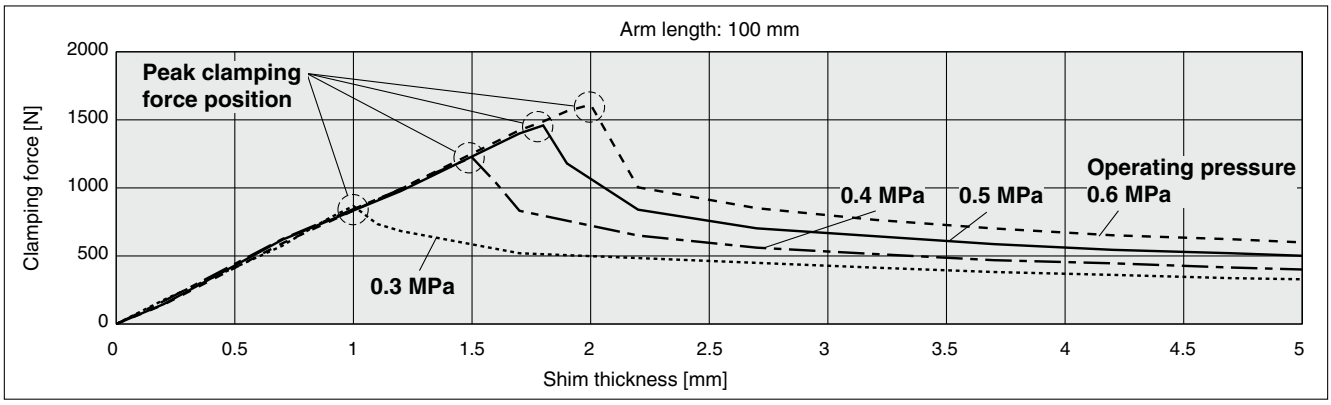


**Bore Size: 50**

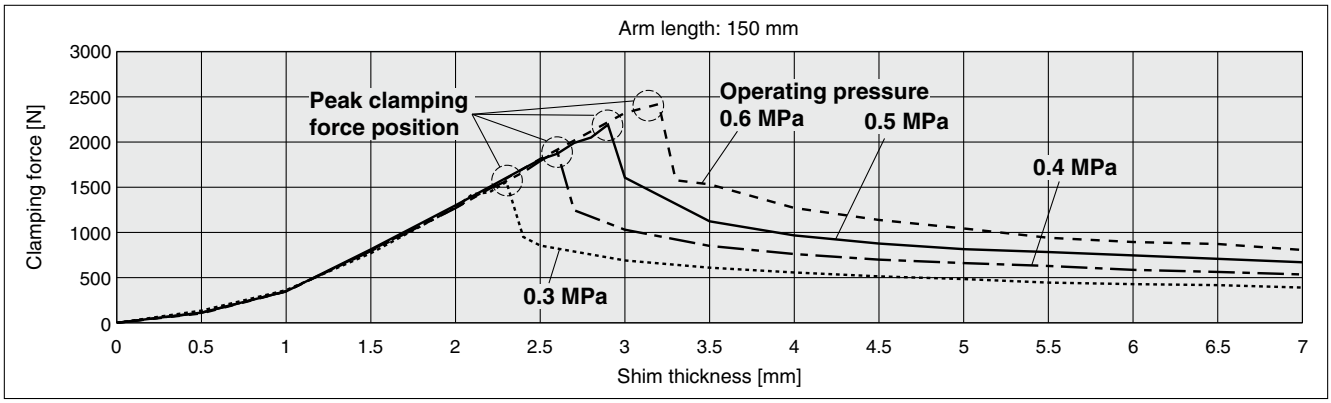

## Relation between shim thickness and clamping force

**Bore Size: 63**

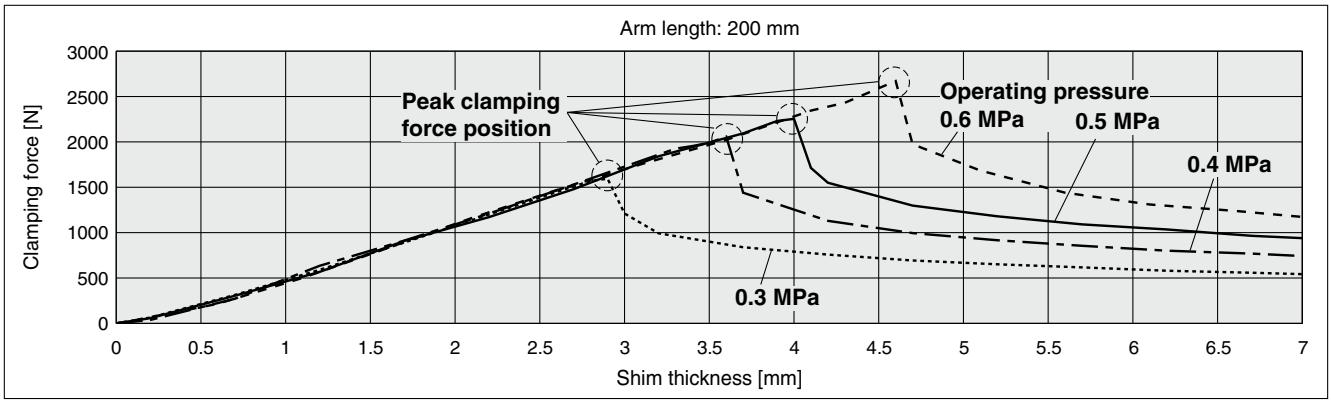


**Bore Size: 80**

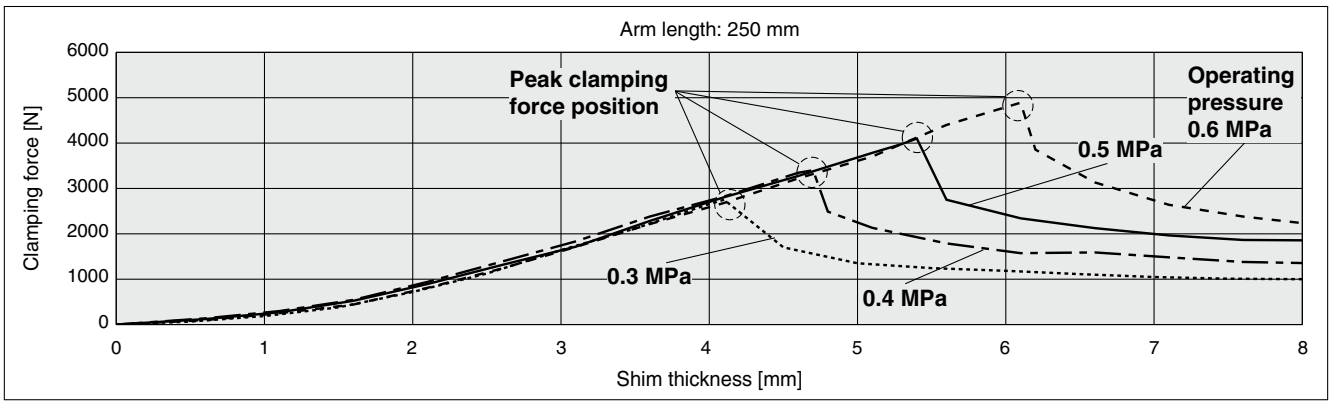

## To change the arm opening angle

⚠ **Caution** Be sure to confirm safety, and perform the work while the air is exhausted.

### 1 Procedure for changing the stopper bolt

1) Remove the stopper bolt of the head cover, and replace with a stopper bolt for the desired angle using the tightening torque below.
   When tightening the stopper bolt, hold the head cover.
   Refer to “Replacement Parts” (page 41) for the part numbers of the applicable stopper bolts.

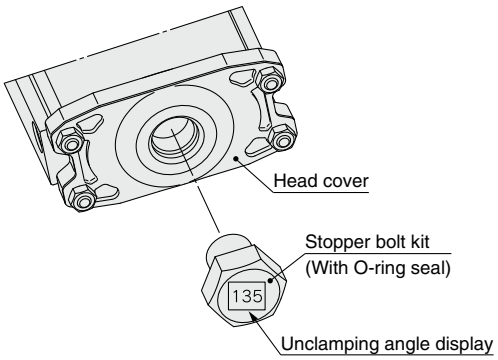


**Stopper Bolt Tightening Torque**

| Bore size | Tightening torque [N·m] |
|---|---|
| **40** | 12.5 to 16.3 |
| **50** | 45 to 65 |
| **63** | 45 to 65 |
| **80** | 130 to 190 |

### 2 Procedure for changing the switch position

1) Set the arm opening to 15° or above.
2) Loosen the switch cassette mounting bolt, and remove the switch cassette.
3) Remove the switch on the unclamping side, and attach it in the position of the desired angle. Store the lead wire in the storage space.
4) Mount the switch cassette to the body, and tighten the switch cassette mounting bolt to the tightening torque shown below.
   Refer to “Replacement Parts Switch Kit No.” (page 41) for the part numbers of the switch cassette replacement parts.

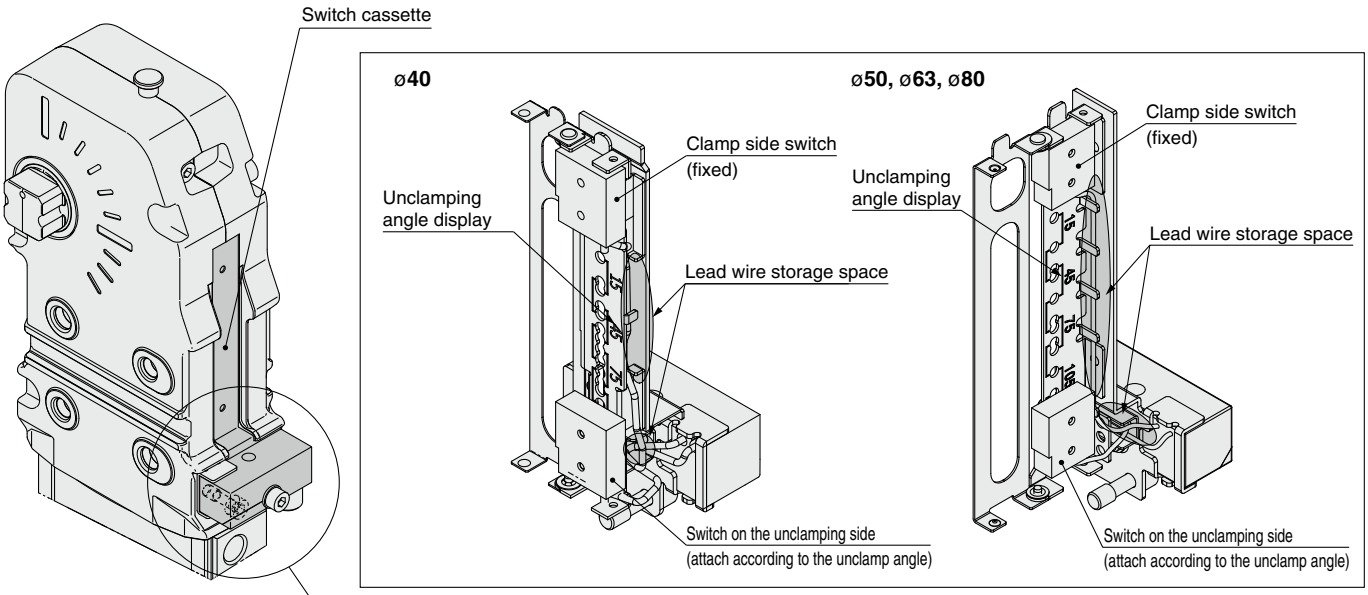


**Inside of the switch cassette**

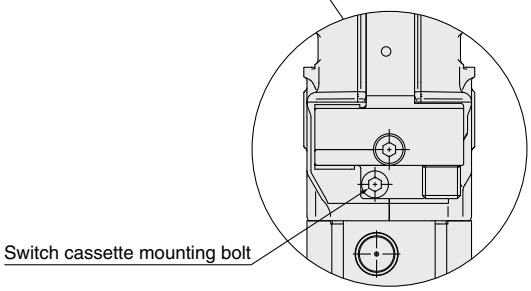


**Switch Cassette Mounting Bolt Tightening Torque**

| Bore size | Tightening torque [N·m] |
|---|---|
| **40** | 3 to 4 |
| **50** | |
| **63** | |
| **80** | |

# Specific Product Precautions

**Be sure to read this before handling the products. Refer to page 179 for safety instructions. For actuator precautions, refer to the "Handling Precautions for SMC Products" and the "Operation Manual" on the SMC website: https://www.smcworld.com**

## ⚠Caution

**1. Manual lock release**

Be sure to confirm safety before manually releasing the lock, and only perform work **while the air is exhausted**. Otherwise, the clamp arm may operate unexpectedly.

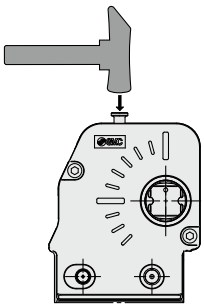

● Provide enough space to perform a manual lock release.

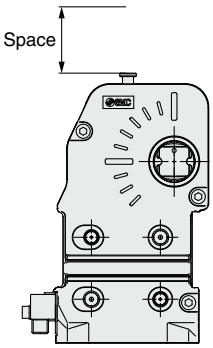


## ⚠Caution

**2. Do not disassemble the power clamp cylinder.**

The power clamp cylinder consists of a completely sealed structure in order to protect it from welding spatter. Do not disassemble, except for when replacing any of the replaceable parts, as this may cause the performance to deteriorate.

**3. Vertical clamping**

When mounting the clamp arm in a vertical clamping position, mount as shown in the figure below. The maximum arm opening angle is 105°.

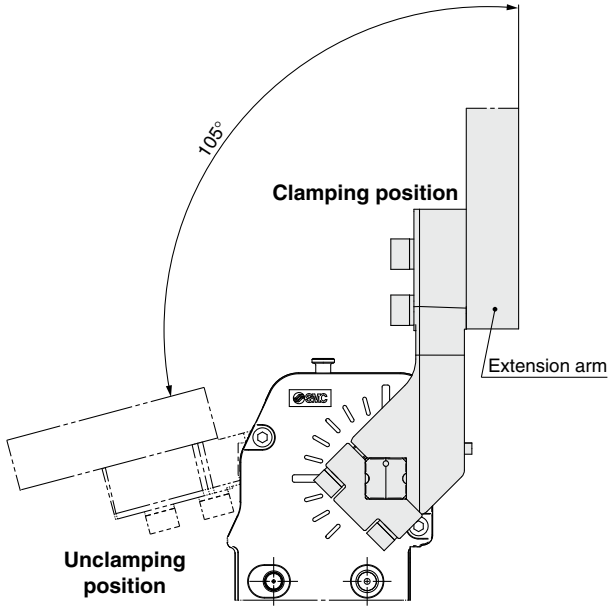


**4. Proximity switch output**

The switch output signal is output near the clamping end and the unclamping end respectively. The switch output signal on the clamping side does not output the status where the power clamp cylinder is locked by the toggle mechanism.

**5. Operating time and allowable load mass**

If the operating time is short or a load exceeding the allowable load mass is applied, a failure of the product, such as breakage and deformation, may occur. If load mass or operating speed exceed the specifications, install external buffers, such as shock absorbers.