SMC

RoHS

Vacuum Gripper Unit

for Collaborative Robots

Plug and Play

configuration for immediate use

URCap Easy programming

UNIVERSAL ROBOTS+
Certified

ZXP-X1

More information
can be viewed here.

P-E20-5

Vacuum Gripper Unit

for Collaborative Robots

For use with: UR3(e), UR5(e), UR10(e), UR16e

Plug and Play

Operate by simply connecting 1 compressed air supply tube and an electrical wiring M8 connector.

- Integrated vacuum ejector, air supply/release valve, pressure sensor, and cups
- Standards: ISO9409-1-50-4-M6
- URCap (Refer to page 5.)

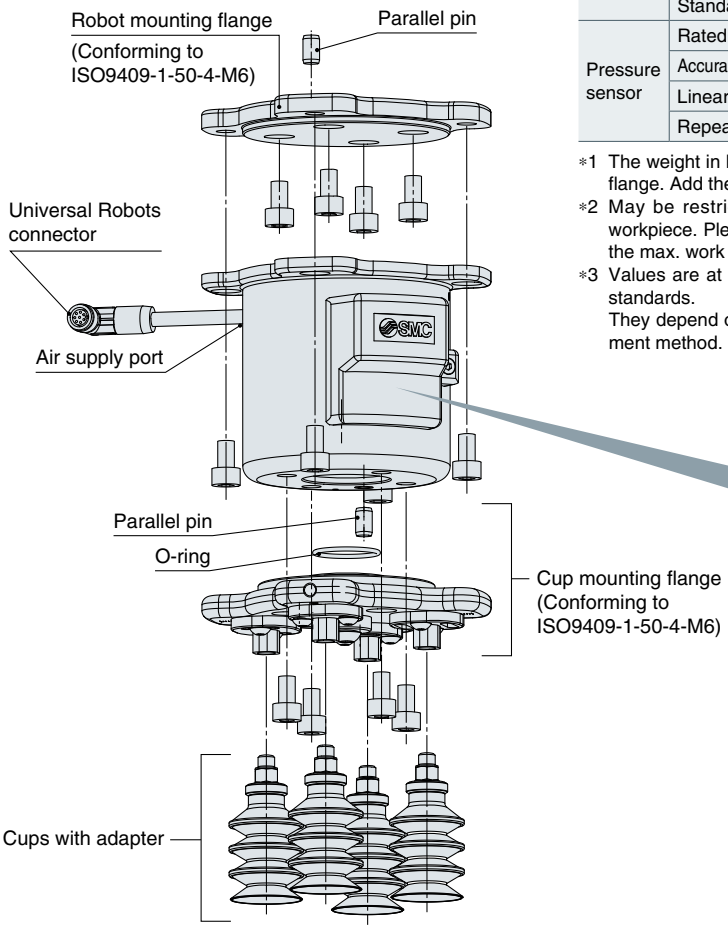

Specifications

Common	Mounting	Conforming to ISO9409-1-50-4-M6
	Applicable fluid	Air
	Operating temperature range [°C]	5 to 50
	Weight [g]*1	840 (612)
	Max. work load [kg]*2	7
	Air pressure supply (P) port	One-touch fitting (ø6)
	Power supply voltage [V]	24 VDC ±10%
Vacuum Ejector	Max. vacuum pressure [kPa]*3	−84
	Suction flow rate [L/min (ANR)]*3	17
	Air consumption [L/min (ANR)]*3	57
	Supply pressure range [MPa]	0.3 to 0.55
	Standard supply pressure [MPa]	0.5
Pressure sensor	Rated pressure range [kPa]	0 to −101
	Accuracy (Ambient temperature at 25°C)	±2% F.S.
	Linearity	±0.4% F.S.
	Repeatability	±0.2% F.S.

*1 The weight in brackets refers to the weight of the product without a cup mounting flange. Add the weight of the suction cups with adapter for the weight with cups.
*2 May be restricted depending on the cup diameter, mounting orientation, or workpiece. Please use within the max. work load. Suction and transfer exceeding the max. work load may result in reduced vacuum pressure due to air leakage.
*3 Values are at the standard supply pressure and based on SMC's measurement standards.
They depend on atmospheric pressure (weather, altitude, etc.) and the measurement method.

Details of internal parts

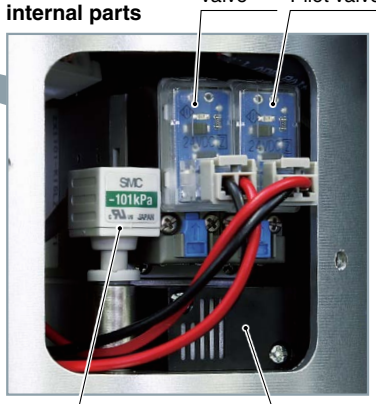

Adsorption Unit Variations

The number of cups can be changed.

1 cup

2 cups

4 cups

The cup type can be changed. (For details on selectable cups, refer to “How to Order.”)

Flat (ø8), Silicone

Bellows (ø20), NBR

Thin flat (ø16), NBR

Flat (ø32), Silicone

Flat (ø32), Urethane

ø32, 2.5-stage, Silicone

ø25, 5.5-stage, Silicone

ø25, 5.5-stage, Silicone
With vacuum saving valve

Vacuum saving valve
ZP2V series
(To be ordered separately)
Applicable part no.: **ZP2V-B6-05**

∗ The silicone material is compliant with the FDA (U.S. Food and Drug Administration) regulation 21CFR§177.

The cup pitch can be changed.

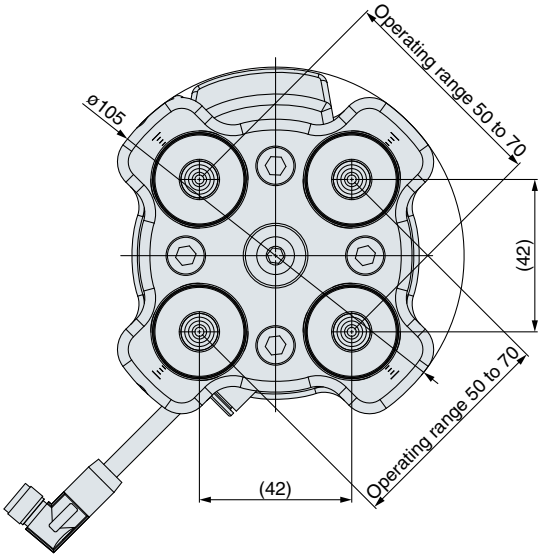

The cup with flange can be used separately

(if using an external vacuum source).

∗1 When using a cup with flange, be sure to order a One-touch fitting for vacuum pressure supply (part number: KQ2L08-01NS) and a vacuum port plug (part number: M-5P) separately.

How to Order

RoHS

ZXP 7 A 01 – ZP 20 U N – X1

❶ ❷ ❸ ❹ ❺ ❻ ❼

❶ Unit size

Symbol	Size
7	75 mm

❷ Cup flange shape

Symbol	Shape
A	42 mm x 42 mm
N	Without flange*1

With flange **Without flange**

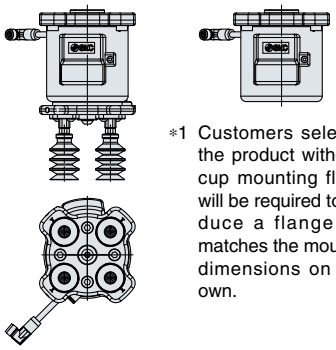

*1 Customers selecting the product without a cup mounting flange will be required to produce a flange that matches the mounting dimensions on their own.

❸ Compatible manufacturer

Symbol	Robot manufacturer
01	UR: 3(e), 5(e), 10(e), 16e

❹ Cup series

Symbol	Series
ZP	Basic
ZP3P	Bellows type for film packaging workpieces
Nil	Without cup

❺ Cup diameter

Symbol	Cup diameter	Symbol	Cup diameter
08	ø8	25	ø25
10	ø10	B25	ø25
13	ø13	B30	ø30
16	ø16	32	ø32
20	ø20	Nil	Without cup

❻ Cup form

Symbol	Type
U	Flat
C	Flat with rib
B	Bellows
UT	Thin flat
J	Multistage bellows
JT5	5-stage bellows
Nil	Without cup

❼ Cup material

Symbol	Material
N	NBR
S	Silicone (White)*2
U	Urethane
F	FKM
SF	Silicone (Blue)*2
Nil	Without cup

*2 The silicone material is compliant with the FDA (U.S. Food and Drug Administration) regulation 21CFR§177.

Suction Cup Variations

Part No. ZXP7(A,N)01 – □□□□ – X1

❹ ❺ ❻ ❼

Cup part numbers

* Refer to the **Web Catalog** for details on suction cups.

❹ Cup series	❺ Cup diameter	❻ Cup form	❼ Cup material	Cup with adapter: Part no.	Weight by cup material (g/cup) N (NBR)	S/SF (Silicone)	U (Urethane)	F (FKM)	Adapter unit (Vacuum inlet: Male thread M6 x 1)	Cup unit
ZP	08	U	□	ZPT08U□-A6	4	4	4	4	ZPT1-A6	ZP08U□
ZP	08	B	□	ZPT08B□-A6	4	4	4	4		ZP08B□
ZP	10	UT	□	ZPT10UT□-A6	4	4	4	4		ZP10UT□
ZP	13	UT	□	ZPT13UT□-A6	4	4	4	4		ZP13UT□
ZP	16	UT	□	ZPT16UT□-A6	4	4	4	4		ZP16UT□
ZP	10	U	□	ZPG10U□-7A-X2	7	7	7	7	ZPT2-7A-X2	ZP10U□
ZP	13	U	□	ZPG13U□-7A-X2	7	7	7	8		ZP13U□
ZP	16	U	□	ZPG16U□-7A-X2	7	7	7	8		ZP16U□
ZP	20	U	□	ZPG20U□-7A-X2	9	10	10	10	ZPT3-7A-X2	ZP20U□
ZP	25	U	□	ZPG25U□-7A-X2	10	10	10	11		ZP25U□
ZP	32	U	□	ZPG32U□-7A-X2	10	11	11	12		ZP32U□
ZP	10	C	□	ZPG10C□-7A-X2	7	7	7	7	ZPT2-7A-X2	ZP10C□
ZP	13	C	□	ZPG13C□-7A-X2	7	7	7	7		ZP13C□
ZP	16	C	□	ZPG16C□-7A-X2	7	7	7	8		ZP16C□
ZP	20	C	□	ZPG20C□-7A-X2	9	10	10	11	ZPT3-7A-X2	ZP20C□
ZP	25	C	□	ZPG25C□-7A-X2	10	10	10	11		ZP25C□
ZP	32	C	□	ZPG32C□-7A-X2	10	11	11	12		ZP32C□
ZP	10	B	□	ZPG10B□-7A-X2	7	7	7	8	ZPT2-7A-X2	ZP10B□
ZP	13	B	□	ZPG13B□-7A-X2	7	8	8	8		ZP13B□
ZP	16	B	□	ZPG16B□-7A-X2	8	8	8	9		ZP16B□
ZP	20	B	□	ZPG20B□-7A-X2	11	11	11	13	ZPT3-7A-X2	ZP20B□
ZP	25	B	□	ZPG25B□-7A-X2	11	12	12	14		ZP25B□
ZP	32	B	□	ZPG32B□-7A-X2	14	15	15	18		ZP32B□
ZP	20	UT	□	ZPG20UT□-7A-X2	4	4	4	4	ZPT1-A6	ZP20UT□
ZP	16	J	□	ZPG16J□-7A-X2	8	8	8	9	ZPT2-7A-X2	ZP16J□
ZP	B25	J	□	ZPGB25J□-7A-X2	14	15	15	18	ZPT3-7A-X2	ZPB25J
ZP	B30	J	□	ZPGB30J□-7A-X2	18	19	19	25		ZPB30J□
ZP3P	20	JT5	SF	ZP3PG20JT5SF-7A-X2	—	23	—	—	ZP3PA-T1JT-7A-X2	ZP3P-20JT5SF-WG
ZP3P	25	JT5	SF	ZP3PG25JT5SF-7A-X2	—	25	—	—		ZP3P-25JT5SF-WG
ZP3P	32	JT5	SF	ZP3PG32JT5SF-7A-X2	—	54	—	—	ZP3PA-T2JT-7A-X2	ZP3P-32JT5SF-WG

Input the material symbol (“N,” “S,” “U,” or “F”) into the □ in the part number.

Dimensions

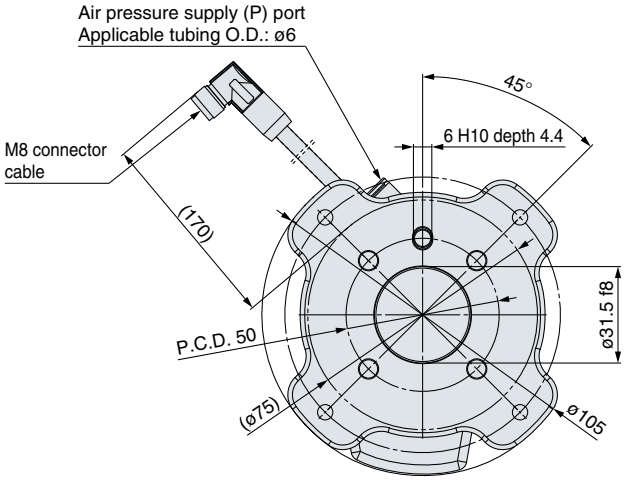

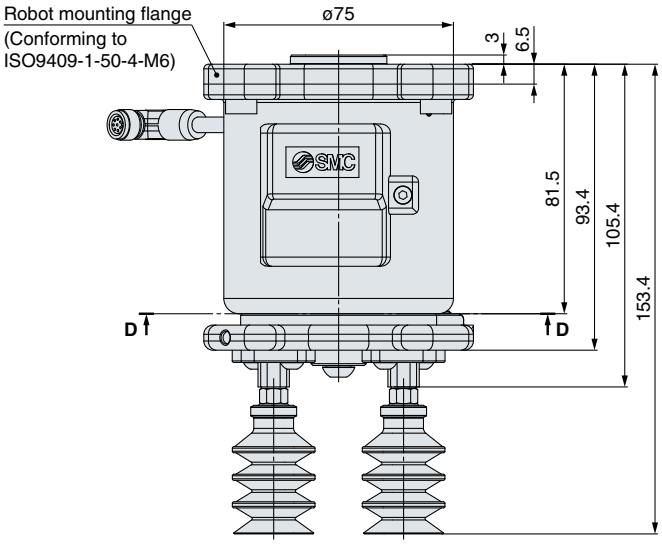

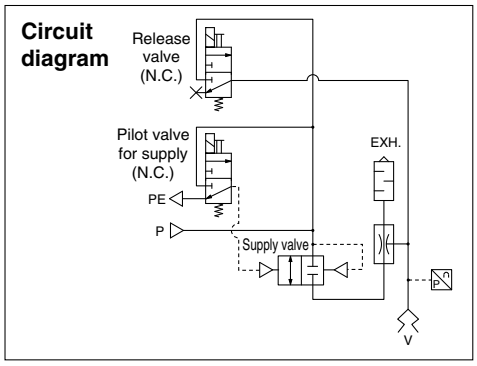

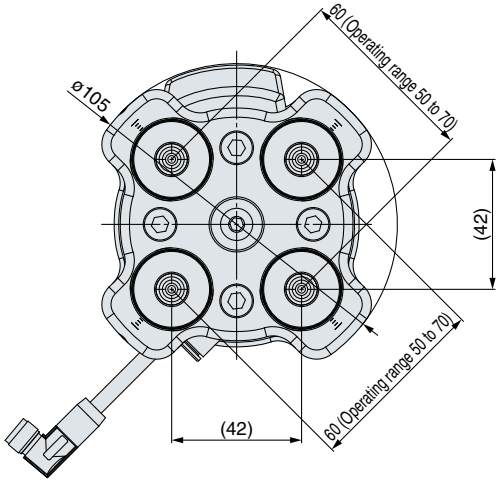

Without cup mounting flange

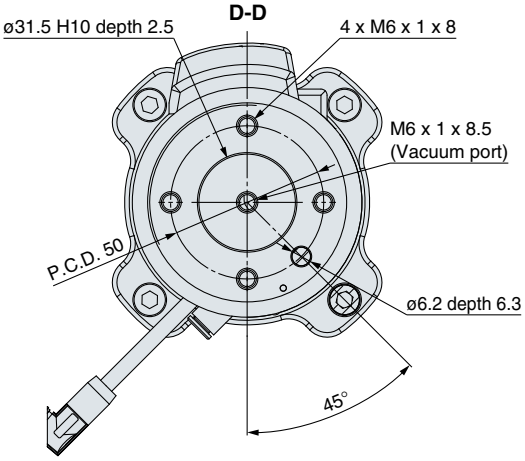

∗ The dimensions and mounting method described in this drawing (example) are for the following part number: ZXP7A01-ZPB25JS-X1

URCap

More information
on the URCap software
can be viewed here.

Easy programming

By using the dedicated software certified for universal robots, URCap, the teaching pendant can conduct various operations intuitively, allowing for sensor signals to be easily incorporated.
Save a copy of the URCap software to a USB memory and insert it into the teaching pendant to easily install the software.

∗ Please download the URCap software from the website, and save it to a USB memory.

Robot arm

Control box

Teach pendant

USB memory∗1
∗1 Provided by the customer
(Saved copy of URCap software)

Vacuum Gripper Unit program screen

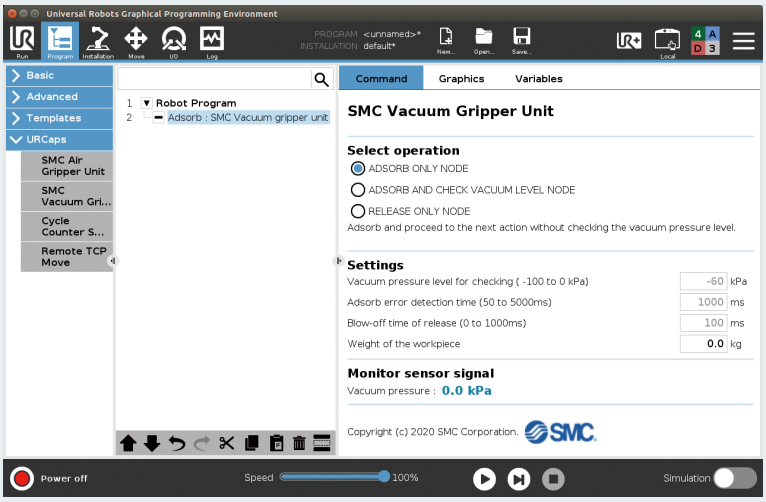

ZXP-X1
Specific Product Precautions

Be sure to read this before handling the products. For safety instructions and vacuum equipment precautions, refer to the "Handling Precautions for SMC Products" and the "Operation Manual" on the SMC website: https://www.smcworld.com

Handling

⚠ Caution

1. **Strictly observe the precautions on vacuum equipment and safety when using the product. Additionally, select a cup size and material suitable to both the workpiece to be adsorbed and the atmosphere. Take safety measures so that any accident, such as the dropping of a workpiece, does not occur during adsorption transfer. For details, refer to the Web Catalog.**
2. **Use the product within the specification range. Use exceeding the compressed air pressure or voltage may result in serious damage due to reduced product performance.**
3. **Exhaust air is released from the opening in the product. Therefore, this exhaust air opening must not be blocked or restricted.**

Mounting

⚠ Caution

1. **For details on the mounting method, refer to the Operation Manual.**
2. **Tighten to the specified tightening torque. If the tightening torque is exceeded, the body and the mounting screws may break. However, insufficient torque may cause displacement of the body and loosening of the mounting screws.**
3. **Do not drop, strike, or apply excessive impact to this product.**
   Doing so may result in damage to the internal parts of the body, solenoid valve, or pressure sensor. In some cases, this damage may result in a malfunction.
4. **Hold the body when handling the product. Do not pull excessively on the M8 connector cable or pinch the cable when lifting the body. Failure to do so may result in damage to the solenoid valve or pressure sensor. In some cases, this damage may result in a failure or malfunction.**
5. **The bolts may loosen due to the operating conditions and environment. Be sure to conduct maintenance such as tightening the bolts periodically.**

Wiring

⚠ Caution

1. **Avoid repeatedly bending or stretching the M8 connector cable as well as applying force to it.**
2. **Do not wire while energizing the product. Doing so may result in damage to the internal parts of the solenoid valve or pressure sensor. In some cases, this damage may result in a malfunction.**
3. **Do not disassemble the M8 connector cable or make any modifications, including additional machining. Doing so may cause human injury and/or an accident.**

Piping

⚠ Caution

1. **Flushing of the inside of the pipes**
   Before piping is connected, it should be thoroughly blown out with air (flushing) or washed to remove chips, cutting oil, and other debris from inside the pipe.
2. **Tube attachment**
   - Take a tube having no flaws on its periphery and cut it off at a right angle. When cutting the tube, use tube cutters TK1-1, 2, or 3. Do not use pliers, nippers, scissors, etc. If cutting is done with tools other than tube cutters, the tube may be cut diagonally or become flattened, etc., making a secure installation impossible, and causing problems such as the tube pulling out after installation or air leakage. Allow some extra length in the tube.
   - Grasp the tube and push it in slowly, inserting it securely all the way into the fitting.
   - After inserting the tube, pull on it lightly to confirm that it will not come out. If it is not installed securely all the way into the fitting, this can cause problems such as air leakage or the tube pulling out.
3. **Tube detachment**
   - Push in the release button sufficiently, pushing its collar equally around the circumference.
   - Pull out the tube while holding down the release button so that it does not come out. If the release button is not pressed down sufficiently, there will be increased bite on the tube and it will become more difficult to pull it out.
   - When the removed tube is to be used again, cut off the portion which has been chewed before reusing it. If the chewed portion of the tube is used as is, this can cause trouble such as air leakage or difficulty in removing the tube.
4. **Other Tube Brands**
   When using other than SMC brand tube, confirm that the following specifications are satisfied with respect to the tube outside diameter tolerance.
   - Nylon tube — within ±0.1 mm
   - Soft nylon tube — within ±0.1 mm
   - Polyurethane tube — within ±0.15 mm, within –0.2 mm

   Do not use tube which do not meet these outside diameter tolerances. It may not be possible to connect them, or they may cause other trouble, such as air leakage or the tube pulling out after connection.
5. **Piping**
   - Do not apply unnecessary forces, such as twisting, pulling, moment loads, vibration, impact, etc., on fittings or tubing. This will cause damage to fittings and will crush, burst, or release tubing.
   - Do not lift the product by the piping after the tube is connected. Doing so may result in damage to the One-touch tube fitting. For details, refer to the "Handling Precautions for SMC Products" on the SMC website: https://www.smcworld.com

Vacuum Gripper Unit

for Collaborative Robots

⚠ Safety Instructions	Be sure to read the “Handling Precautions for SMC Products” (M-E03-3) and “Operation Manual” before use.