Vacuum Pad: Lateral Vacuum Entry with Barb Fitting With Buffer

Series ZPY

Specifications

Vacuum entry	Direction		Lateral
	Connection		Barb fitting
	Applicable tubing dia.	2 x 4, 3.5 x 7, 4 x 10 ø10 to ø16 (Thin section series) ø2 to ø8	ø4, ø6 Nylon tube, ø4, ø6 Urethane tube
		ø10 to ø16	ø4, ø6 Nylon tube, ø4, ø6 Urethane tube
		ø20 to ø32	ø4, ø6 Nylon tube, ø4, ø6 Urethane tube
		ø40, ø50	ø6 Nylon tube, ø6 Urethane tube
Mounting	Thread dia.	2 x 4, 3.5 x 7, 4 x 10 ø10 to ø16 (Thin section series) ø2 to ø8	M8 x 1 Male thread
		ø10 to ø16	M10 x 1 Male thread
		ø20 to ø32	M10 x 1 Male thread
		ø40 to ø50	M14 x 1 Male thread
Buffer type			Rotating (J)/Non-rotating (K)
Buffer stroke			For ø2 to ø8 ——— 6, 10, 15, 25 mm
			For ø10 to ø32 ——— 10, 20, 30, 40, 50 mm For ø40, ø50 ——— 10, 20, 30, 50 mm

Pad Type

Pad form	Flat	Flat with ribs	Deep	Bellows	Thin flat/Thin flat with ribs
Pad dia. (mm)	2, 4, 6, 8, 2 x 4, 3.5 x 7, 4 x 10, 10, 13, 16, 20, 25, 32, 40, 50	10, 13, 16, 20, 25, 32, 40, 50	10, 16, 25, 40	6, 8, 10, 13, 16, 20, 25, 32, 40, 50	10, 13, 16
Material (Color)	NBR (Black), Silicon rubber (White), Urethane rubber (Brown), Fluoro rubber (Black with green mark) Conductive NBR (Black with one white mark), Conductinve silicon rubber (Black with two white marks)				
Durometer	NBR (50°), Silicon rubber (40°), Urenthane rubber/Fluoro rubber (60°) Conductive NBR (50°), Conductive silicon rubber (50°)				

Spring Reactive Force (N)

Dia. (mm)	0 stroke	Stroke end
ø2 to ø8 *	0.8 N	1.2 N
ø10 to ø32	1.0 N	3.0 N
ø40, ø50	2.0 N	5.0 N

* Refer to ø2 to ø8 for Thin flat, Thin flat with ribs and Elipse type.

Weight (g)

Stroke (mm)	Model \ Pad form	Flat/ Flat with ribs	Deep	Bellows
6	**ZPY2004** **ZPY3507** **ZPY4010** **ZPY02 to 08** **ZPY10 to 16** (Thin section series)	33	—	33
10	**ZPY 10 to 16**	45	45	46
10	**ZPY 20 25**	50	51	53
	ZPY 32	52	—	58
10	**ZPY 40**	115	117	127
	ZPY 50	132	—	134

Weight by Stroke (g)

Model \ Stroke (mm)	10	15	20	25	30	40	50
ZPY02 to 08	+7	+8	—	+9	—	—	—
ZPY10 to 25	—	—	+12	—	+14	+26	+28
ZPY40, 50	—	—	–5.5	—	–5.5	—	+30

Made to Order P. 13-11-65 to 13-11-68

How to Order

Series ZPY With buffer

ZPY 16 U GS K 20 — U6 — A10

Pad diameter (mm)

2004	2 x 4
3507	3.5 x 7
4010	4 x 10
02	ø2
04	ø4
06	ø6
08	ø8
10	ø10
13	ø13
16	ø16
20	ø20
25	ø25
32	ø32
40	ø40
50	ø50

Pad type
(Refer to "Table (1)" for applications.)

U	Flat
C	Flat with ribs
D	Deep
B	Bellows
UT	Thin flat
CT	Thin flat with ribs

Material

N	NBR
S	Silicon rubber
U	Urethane rubber
F	Fluoro rubber
GN *	Conductive NBR (ø2 to ø16)
GS *	Conductive silicon rubber (ø2 to ø16)

* ø20 or large are manufactured upon receipt of order.

Buffer type

J	Rotating
K	Non-rotating

Buffer stroke
(Refer to "Table (2)" for applications.)

Vacuum entry port
(Refer to "Table (3)" for applications.)

Mounting thread
(Refer to "Table (3)" for applications.)

Table (1) Pad Diameter/Pad Type

Type \ Dia. (mm)	2 x 4	3.5 x 7	4 x 10	2	4	6	8	10	13	16	20	25	32	40	50
Flat	●	●	●	●	●	●	●	●	●	●	●	●	●	●	●
Flat with ribs	—	—	—	—	—	—	—	●	●	●	●	●	●	●	●
Deep	—	—	—	—	—	—	—	●	—	●	—	●	—	●	—
Bellows	—	—	—	—	—	●	●	●	●	●	●	●	●	●	●
Thin flat	—	—	—	—	—	—	—	●	●	●	—	—	—	—	—
Thin flat with ribs	—	—	—	—	—	—	—	●	●	●	—	—	—	—	—

Table (2) Pad Diameter/Stroke

Stroke \ Dia. (mm)	2 x 4	3.5 x 7	4 x 10	2	4	6	8	Thin flat/Thin flat with ribs 10	13	16	10	13	16	20	25	32	40	50
6	●	●	●	●	●	●	●	●	●	●	—	—	—	—	—	—	—	—
10	●	●	●	●	●	●	●	●	●	●	●	●	●	●	●	●	●	●
15	●	●	●	●	●	●	●	●	●	●	—	—	—	—	—	—	—	—
20	—	—	—	—	—	—	—	—	—	—	●	●	●	●	●	●	●	●
25	●	●	●	●	●	●	●	●	●	●	—	—	—	—	—	—	—	—
30	—	—	—	—	—	—	—	—	—	—	●	●	●	●	●	●	●	●
40	—	—	—	—	—	—	—	—	—	—	●	●	●	●	●	●	—	—
50	—	—	—	—	—	—	—	—	—	—	●	●	●	●	●	●	●	●

Table (3) Vacuum Entry/Mounting Thread Diameter

		Symbol	Thread dia./ Port size	ø2 to ø8 2 x 4, 3.5 x 7 4 x 10 ø10 to ø16 (Thin section series)	ø10 to ø32	ø40, ø50
Vacuum entry	One-touch fitting	**N4**	ø4 Nylon tube	●	●	—
		N6	ø6 Nylon tube	●	●	●
		U4	ø4 Urethane tube	●	●	—
		U6	ø6 Urethane tube	●	●	●
Mounting	Male thread	**A8**	M8 x 1	●	—	—
		A10	M10 x 1	—	●	—
		A14	M14 x 1	—	—	●

Connection	Barb fitting	Pad Form	Flat/Thin flat/Thin flat with ribs/Elliptic
Vacuum Entry Port	Lateral	Mounting	Male thread

Flat	ø2, ø4, ø6, ø8

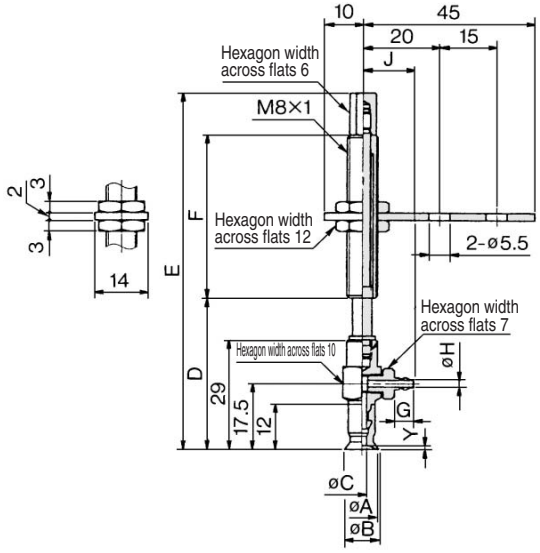

Elliptic

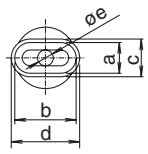

Flat

Model	A	B	C	Y
ZPY02U□□□□□-□□-A8	2	2.6	1.2	0.8
ZPY04U□□□□□-□□-A8	4	4.8	1.6	
ZPY06U□□□□□-□□-A8	6	7	2.5	
ZPY08U□□□□□-□□-A8	8	9		1

Elliptic

Model	a	b	c	d	øe	Y
ZPY2004U	2	4	2.6	4.6	1.2	0.3
ZPY3507U	3.5	7	4.3	7.8	1.8	0.5
ZPY4010U	4	10	5	11	2	0.8

Thin Flat/Thin Flat with Ribs

Model	A	B	C	Y
ZPY10UT	10	11	2.5	1
ZPY13UT	13	14		1.5
ZPY16UT	16	17		
ZPY10CT	10	11		0.8
ZPY13CT	13	14		1
ZPY16CT	16	17		

Dimensions by Stroke

Model	D	E	F	ø4 tube			ø6 tube		
				G	H	J	G	H	J
ZPY□□U□□□16-□□-A8	37	63	15	5	1.8	12.5	7	2.5	15.5
ZPY□□U□□□10-□□-A8	40	94	43						
ZPY□□U□□□15-□□-A8	45	99							
ZPY□□U□□□25-□□-A8	55	109							

Connection	**Barb fitting**	**Pad Form**	**Flat/Flat with ribs/Deep**
Vacuum Entry Port	**Lateral**	**Mounting**	**Male thread**

Flat/Flat with ribs	**ø10, ø13, ø16**	**Deep**	**ø10, ø16**

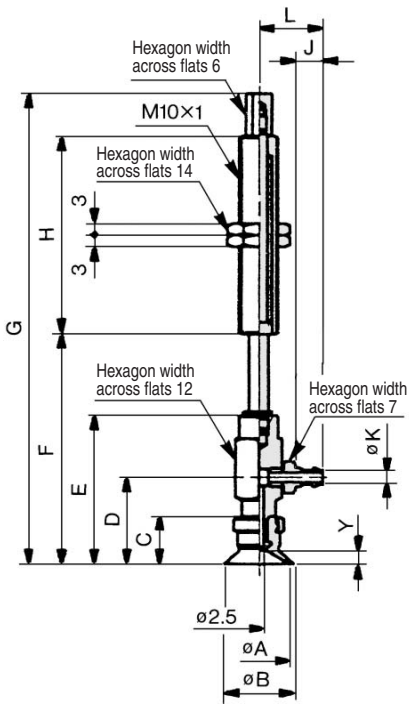

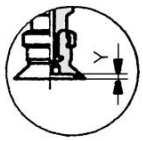

Flat with ribs

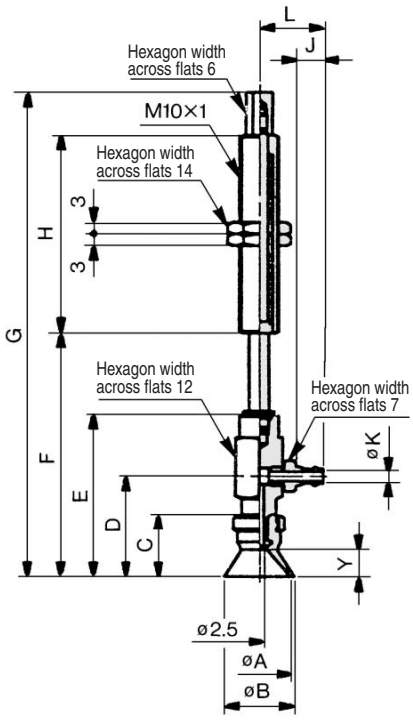

Flat/Flat with Ribs

Model	A	B	C	D	E	Y	
						Flat	Flat with ribs
ZPY10$^{U}_{C}$□□□□□-□□A10	10	12	12	22	38	3	1.7
ZPY13$^{U}_{C}$□□□□□-□□A10	13	15					1.8
ZPY16$^{U}_{C}$□□□□□-□□A10	16	18	12.5	22.5	38.5	3.5	1.2

Dimensions by Stroke

Model	ø10, ø13		ø16		H
	F	G	F	G	
ZPY□□$^{U}_{C}$□□□10-□□-A10	49	83	49.5	83.5	23
ZPY□□$^{U}_{C}$□□□20-□□-A10	59	121	59.5	121.5	51
ZPY□□$^{U}_{C}$□□□30-□□-A10	69	131	69.5	131.5	
ZPY□□$^{U}_{C}$□□□40-□□-A10	79	167	79.5	167.5	77
ZPY□□$^{U}_{C}$□□□50-□□-A10	89	177	89.5	177.5	

Deep

Model	A	B	C	D	E	Y
ZPY10D□□□□□-□□-A10	10	12	15	25	41	6
ZPY16D□□□□□-□□-A10	16	18	16	26	42	7

Dimensions by Stroke

Model	ø10		ø16		H
	F	G	F	G	
ZPY□□D□□□10-□□-A10	52	86	53	87	23
ZPY□□D□□□20-□□-A10	62	124	63	125	51
ZPY□□D□□□30-□□-A10	72	134	73	135	
ZPY□□D□□□40-□□-A10	82	170	83	171	77
ZPY□□D□□□50-□□-A10	92	180	93	181	

Dimensions by Tubing

Model	J	K	L
ZPY□□□□□□□□-□4-A10	5	1.8	14.5
ZPY□□□□□□□□-□6-A10	7	2.5	16.5

Connection	Barb fitting	Pad Form	Flat/Flat with ribs/Deep
Vacuum Entry Port	Lateral	Mounting	Male thread

Flat/Flat with ribs	ø20, ø25, ø32	Deep	ø25

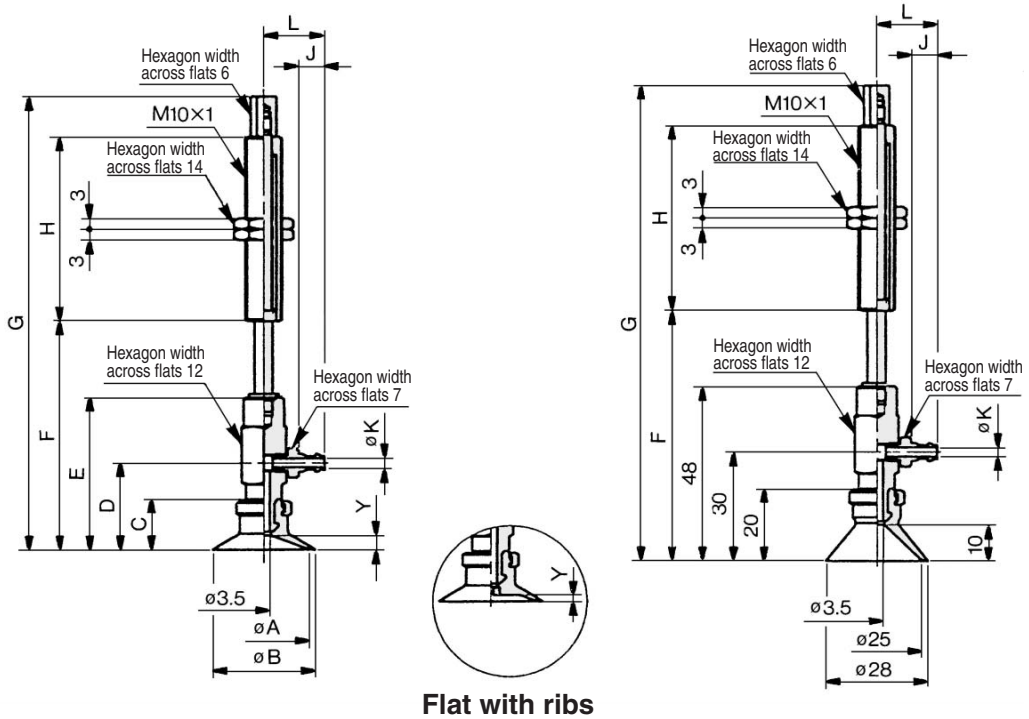

Flat with ribs

Flat/Flat with Ribs

Model	A	B	C	D	E	Y	
						Flat	Flat with ribs
ZPY20 U/C □□□□□-□□A10	20	23	14	24	42	4	1.7
ZPY25 U/C □□□□□-□□A10	25	28					1.8
ZPY32 U/C □□□□□-□□A10	32	35	14.5	24.5	42.5	4.5	2.3

Dimensions by Stroke

Model	ø20, ø25		ø32		H
	F	G	F	G	
ZPY□□ U/C □□□10-□□-A10	53	87	53.5	87.5	23
ZPY□□ U/C □□□20-□□-A10	63	125	63.5	125.5	51
ZPY□□ U/C □□□30-□□-A10	73	135	73.5	135.5	
ZPY□□ U/C □□□40-□□-A10	83	171	83.5	171.5	77
ZPY□□ U/C □□□50-□□-A10	93	181	93.5	181.5	

Deep

Model	F	G	H
ZPY25D□□□10-□□-A10	59	93	23
ZPY25D□□□20-□□-A10	69	131	51
ZPY25D□□□30-□□-A10	79	141	
ZPY25D□□□40-□□-A10	89	177	77
ZPY25D□□□50-□□-A10	99	187	

Dimensions by Tubing

Model	J	K	L
ZPY□□□□□□□□□-□4-A10	5	1.8	14.5
ZPY□□□□□□□□□-□6-A10	7	2.5	16.5

Connection	**Barb fitting**	**Pad Form**	**Flat/Flat with ribs/Deep**
Vacuum Entry Port	**Lateral**	**Mounting**	**Male thread**

Flat/Flat with ribs	**ø40, ø50**	**Deep**	**ø40**

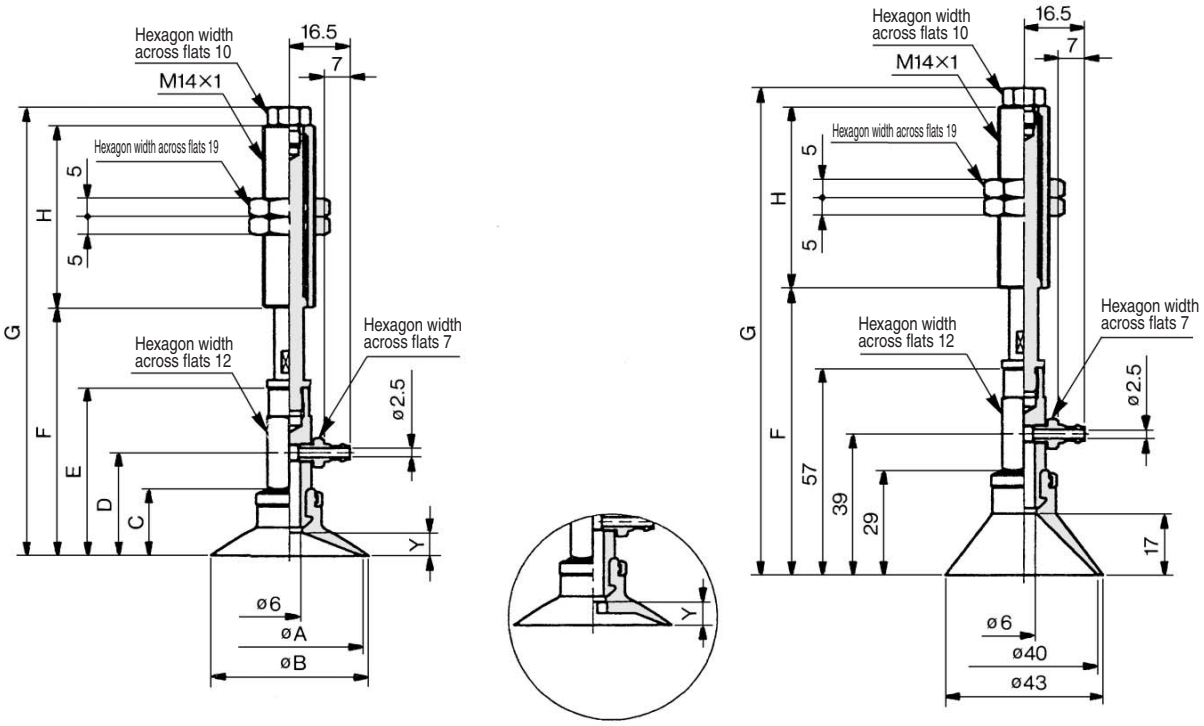

Flat with ribs

Flat/Flat with Ribs

Model	A	B	C	D	E	Y	
						Flat	Flat with ribs
ZPY40 U/C □□□□□-□6-A14	40	43	18.5	28.5	46.5	6.5	3.3
ZPY50 U/C □□□□□-□6-A14	50	53	19.5	29.5	47.5	7.5	3.8

Deep

Model	F	G	H
ZPY40D□□□10-□6-A14	69	137	50
ZPY40D□□□20-□6-A14	79	134	
ZPY40D□□□30-□6-A14	89	144	
ZPY40D□□□50-□6-A14	109	189	75

Dimensions by Stroke

Model	ø40		ø50		H
	F	G	F	G	
ZPY□□ U/C □□□10-□6-A14	58.5	126.5	59.5	127.5	50
ZPY□□ U/C □□□20-□6-A14	68.5	123.5	69.5	124.5	
ZPY□□ U/C □□□30-□6-A14	78.5	133.5	79.5	134.5	
ZPY□□ U/C □□□50-□6-A14	98.5	178.5	99.5	179.5	75

Connection	Barb fitting	Pad Form	Bellows
Vacuum Entry Port	Lateral	Mounting	Male thread

Bellows ø6, ø8

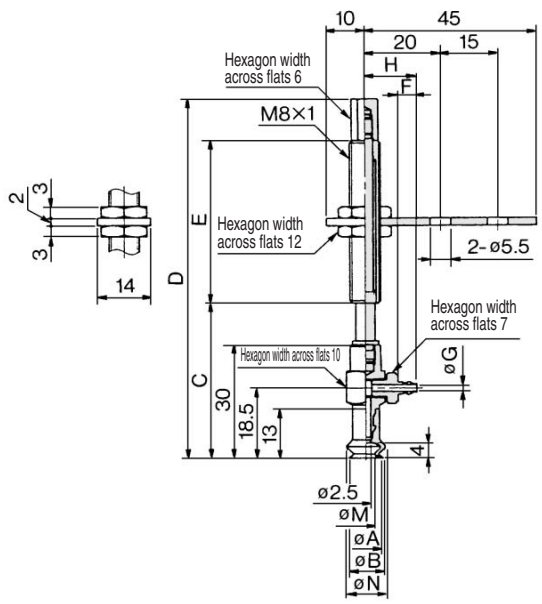

Bellows ø10, ø13, ø16

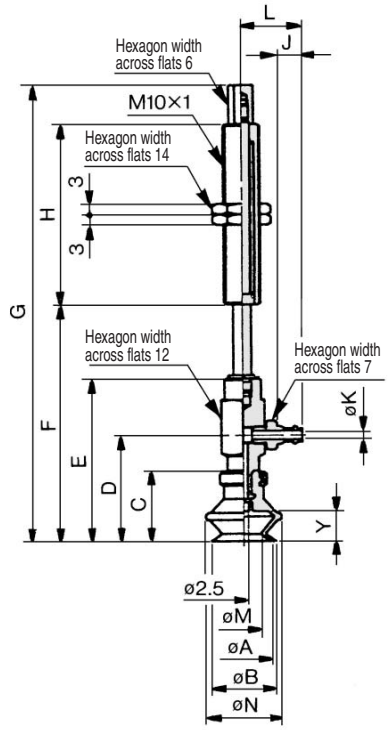

Bellows

Model	A	B	M	N
ZPY06B□□□□□-□□-A8	6	7	3.3	9.1
ZPY08B□□□□□-□□-A8	8	9	4.7	10.1

Dimensions by Stroke

Model	C	D	E	ø4 tube			ø6 tube		
				F	G	H	F	G	H
ZPY□□B□□□16-□□-A8	38	64	15	5	1.8	13.5	7	2.5	15.5
ZPY□□B□□□10-□□-A8	41	95	43						
ZPY□□B□□□15-□□-A8	46	100							
ZPY□□B□□□25-□□-A8	56	110							

Bellows

Model	A	B	C	D	E	M	N	Y
ZPY10B□□□□□-□□-A10	10	12	16	25	42	5.5	13.8	5.5
ZPY13B□□□□□-□□-A10	13	15	18.5	28.5	44.5	8.7	19	7.5
ZPY16B□□□□□-□□-A10	16	18	20	30	46	9.9	21	8.5

Dimensions by Stroke

Model	ø10		ø13		ø16		H	ø4 tube			ø6 tube		
	F	G	F	G	F	G		J	K	L	J	K	L
ZPY□□B□□□10-□□-A10	53	87	55.5	89.5	57	91	23	5	1.8	14.5	7	2.5	16.5
ZPY□□B□□□20-□□-A10	63	125	65.5	127.5	67	129	51						
ZPY□□B□□□30-□□-A10	73	135	75.5	137.5	77	139							
ZPY□□B□□□40-□□-A10	83	171	85.5	173.5	87	175	77						
ZPY□□B□□□50-□□-A10	93	181	95.5	183.5	97	185							

Connection	Barb fitting	Pad Form	Bellows
Vacuum Entry Port	Lateral	Mounting	Male thread

Bellows ø20, ø25, ø32

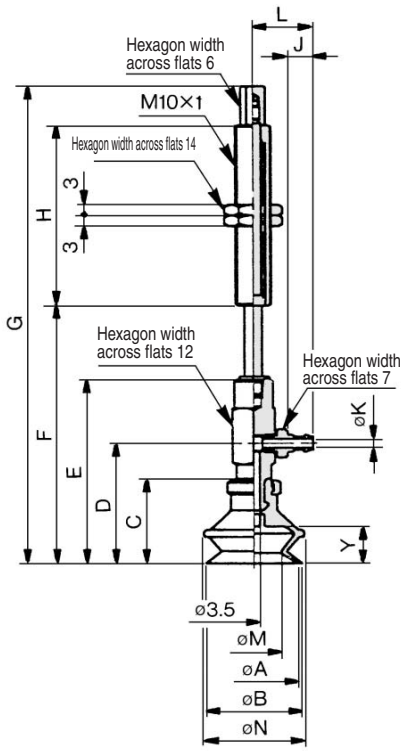

Bellows ø40, ø50

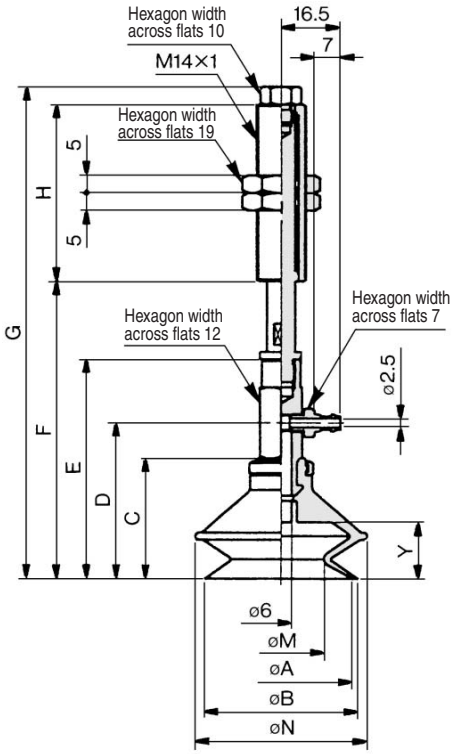

Bellows

Model	A	B	C	D	E	M	N	Y
ZPY20B□□□□□-□□-A10	20	22	23.5	33.5	51.5	12.4	25	10.5
ZPY25B□□□□□-□□-A10	25	27	24	34	52	15.6	28	
ZPY32B□□□□□-□□-A10	32	34	29	39	57	18.9	37	14

Dimensions by Stroke

Model	ø20		ø25		ø32		H	ø4 tube			ø6 tube		
	F	G	F	G	F	G		J	K	L	J	K	L
ZPY□□B□□□10-□□-A10	62.5	96.5	63	97	68	102	23	5	1.8	14.5	7	2.5	16.5
ZPY□□B□□□20-□□-A10	74.5	136.5	75	137	80	142	51						
ZPY□□B□□□30-□□-A10	84.5	146.5	85	147	90	152							
ZPY□□B□□□40-□□-A10	94.5	182.5	95	183	100	188	77						
ZPY□□B□□□50-□□-A10	104.5	192.5	105	193	110	198							

Bellows

Model	A	B	C	D	E	M	N	Y
ZPY40B□□□□□-□6-A14	40	43	34	44	62	24.4	48	16
ZPY50B□□□□□-□6-A14	50	53	38	48	66	32.4	57	19

Dimensions by Stroke

Model	ø40		ø50		H
	F	G	F	G	
ZPY□□B□□□10-□6-A14	74	142	78	146	50
ZPY□□B□□□20-□6-A14	84	139	88	143	
ZPY□□B□□□30-□6-A14	94	149	98	153	
ZPY□□B□□□50-□6-A14	114	194	118	198	75