Vacuum Pads

Basic Pad **ZP** Series / Compact Type **ZP3** Series
Oval Pad **ZP/ZP2** Series / High Rigidity Pad **ZP3E** Series
Pads for Special Applications



SMC

CAT.E104A

Basic Pad *ZP* Series

p. 26

Pad diameter	ø2, ø4, ø6, ø8, ø10, ø13, ø16, ø20, ø25, ø32, ø40, ø50
Pad form	Flat type, Flat type with ribs, Bellows type, Thin flat type, Thin flat type with ribs, Deep type
Mounting	Male thread, Female thread
Vacuum inlet direction	Vertical, Lateral
Vacuum inlet	Male thread, Female thread, One-touch fitting, Barb fitting
Buffer	Without, With [Buffer stroke [mm]: 6, 10, 15, 20, 25, 30, 40, 50]
Ball joint	Without, With (Flat type only)

12 sizes, 6 types of pad forms
The mounting bracket can be selected according to the application.



Compact Type *ZP3* Series

p. 132

Pad diameter	ø1.5, ø2, ø3.5, ø4, ø6, ø8, ø10, ø13, ø16
Pad form	Flat type, Flat type with groove, Bellows type, Bellows type with ribs
Mounting	Male thread, Female thread
Vacuum inlet direction	Vertical, Lateral
Vacuum inlet	Male thread, Female thread, One-touch fitting, Barb fitting
Buffer	Without, With [Buffer stroke [mm]: 3, 6, 10, 15, 20]



Overall length shortened **For the flat type** (Pad diameter: ø2)

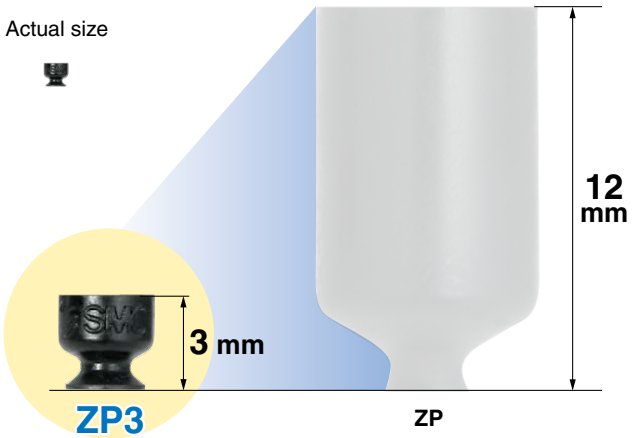

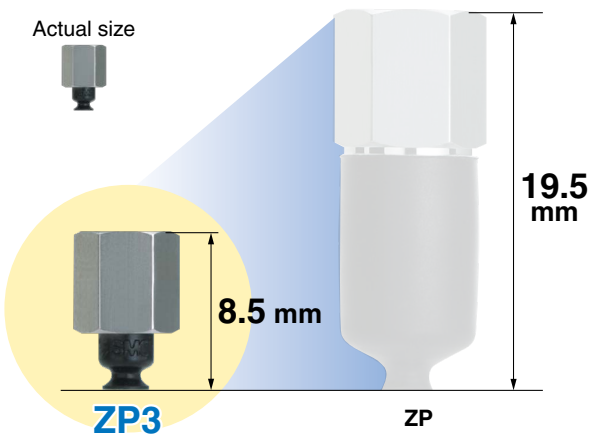

Oval Pad *ZP/ZP2 Series*

p. 166

Pad size	2 x 4, 3.5 x 7, 4 x 10, 4 x 20, 4 x 30, 5 x 10, 5 x 20, 5 x 30, 6 x 10, 6 x 20, 6 x 30, 8 x 20, 8 x 30
Pad form	Oval flat type
Mounting	Male thread, Female thread
Vacuum inlet direction	Vertical, Lateral
Vacuum inlet	Male thread, Female thread, One-touch fitting, Barb fitting
Buffer	Without, With [Buffer stroke [mm] ZP: 6, 10, 15, 20 / ZP2: 10, 20, 30, 40, 50]

For rectangular, vertically long, and horizontally long workpieces

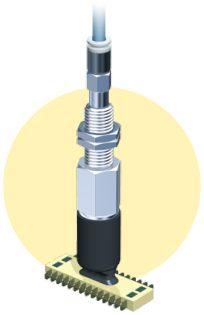

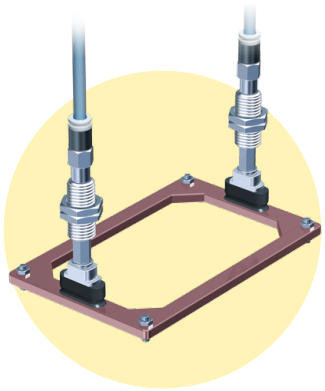



ZP Series



ZP2 Series

High Rigidity Pad *ZP3E Series*

p. 200

Pad diameter	ø32, ø40, ø50, ø63, ø80, ø100, ø125
Pad form	Flat type with groove, Bellows type with ribs and groove
Mounting	Male thread, Female thread
Vacuum inlet direction	Vertical, Lateral
Vacuum inlet	Male thread, Female thread
Buffer	Without, With [Buffer stroke [mm]: 10, 30, 50]
Ball joint	Without, With



Stable suction position, Improved ease of removal

Stable suction position

Groove and rib formed to adsorb with entire surface



Improved ease of removal

With groove

The dents and bumps on the adsorption surface prevent workpieces from sticking to the pad.
This facilitates easy removal.

Shot-blasted

Micro-dents and bumps are formed on the adsorption surface. Workpieces can be removed easily.



Pads for Special Applications *ZP2/ZP3P Series*

p. 248

Mark-free Pad

For use where adsorption marks must not be left on workpieces





For Film Adsorption

Good for film packaging applications

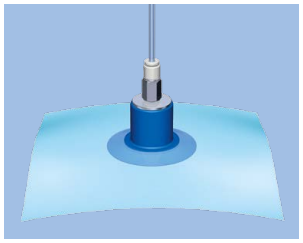



Multistage

For use where there is no space for a buffer (spring type)

For workpieces with inclined adsorption surfaces

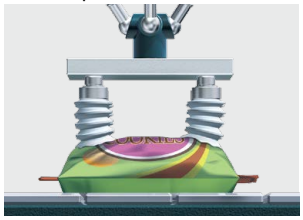



Flat Pad

For the adsorption of flexible sheets or film

Reduced deformation of flat surfaces during adsorption

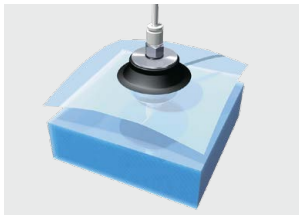



Nozzle Pad

For the adsorption of small components such as IC chips





Sponge Pad

For the adsorption of workpieces with bumps

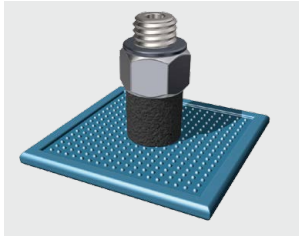



Vacuum Pad for Disk Adsorption

For the adsorption of circular components like CDs and DVDs

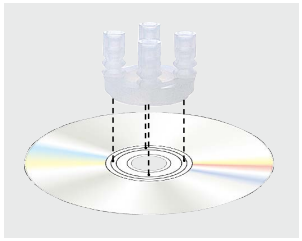



Vacuum Pad for Panel Holding

For the adsorption and holding of the stage of panels, glass circuit boards, etc.

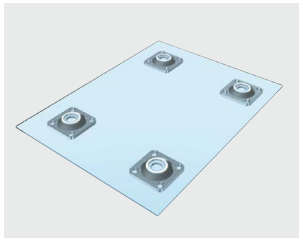



Pad with Ball Spline Buffer

The ball spline guide is used for buffers.





Made to Order *ZP/ZP2 Series*

p. 298

Compact Pad

Pad diameter: ø3, ø4, ø5, ø6, ø7, ø8
Pad form: Flat type, Flat type with ribs, Thin flat type, Bellows type

Compact, Space saving

Blast-type pad
Workpieces can be removed easily.



Short-type Pad

Pad diameter: ø2, ø3, ø3.5, ø4, ø5, ø6, ø8, ø10, ø15
Pad form: Flat type

Space saving in the height direction

Blast-type pad
Workpieces can be removed easily.



Thin Flat Pad

Pad diameter: ø5, ø6, ø11, ø14, ø18, ø20

For the adsorption of soft workpieces such as thin sheets or vinyl
Wrinkling or deformation during adsorption is reduced.



Bellows Pad

Pad diameter: ø2, ø4, ø5, ø6, ø8, ø10, ø15, ø20

For use where there is no space for a buffer (spring type)
For the adsorption of workpieces with inclined surfaces



High Rigidity Pad

Pad diameter: ø32, ø40, ø50, ø63, ø80, ø100, ø125, ø150, ø250, ø300, ø340, 30 x 50
Pad form: Flat type with ribs, Thin flat type with ribs, Bellows type, Oval type



Ball joint

p. 344

Non-contact Gripper

Assists in non-contact workpiece transfer

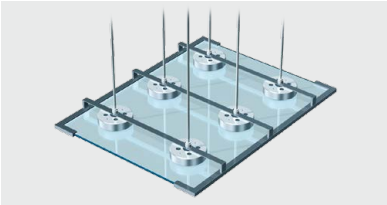



Vacuum Saving Valve

Can restrict the reduction of vacuum pressure even when there is no workpiece





Magnet Gripper

Steel plates can be transferred without vacuum.

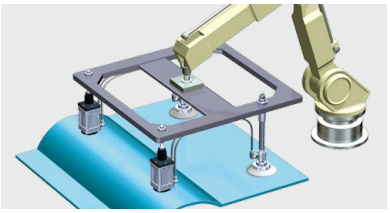



Pad Form/Pad Diameter Variations List

Vacuum Pad ZP Series

Variations ▸ p. 27

Pad form		Symbol	Pad diameter [mm] ø1.5	ø2	ø3.5	ø4	ø6	ø8	ø10	ø13	ø16	ø20	ø25	ø32	ø40	ø50	Page: Dimensions/ Models	Page: Construction	Page: Mounting bracket assembly
Flat		—	●	●		●	●	●	●	●	●	●	●	●	●	From p. 32	From p. 115	From p. 121
		With ribs							●	●	●	●	●	●	●	●	From p. 51	From p. 117	From p. 121
	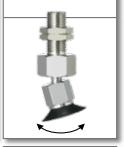	Ball joint							●	●	●	●	●	●	●	●	From p. 62	From p. 119	From p. 127
Bellows		—					●	●	●	●	●	●	●	●	●	●	From p. 68	From p. 115	From p. 121
Thin flat		—							●	●	●						From p. 87	From p. 115	From p. 121
		With ribs							●	●	●						From p. 96	From p. 115	From p. 121
Deep		—									●		●		●		From p. 105	From p. 117	From p. 121

Vacuum Pad/Compact Type ZP3 Series

Variations ▸ p. 134

Pad form		Symbol	Pad diameter [mm] ø1.5	ø2	ø3.5	ø4	ø6	ø8	ø10	ø13	ø16	ø20	ø25	ø32	ø40	ø50	Page: Dimensions/ Models	Page: Construction	Page: Mounting bracket assembly
Flat		—	●	●	●												From p. 137	From p. 160	From p. 162
		With groove				●	●	●	●	●	●						From p. 143	From p. 160	From p. 162
Bellows		—				●	●	●									From p. 149	From p. 160	From p. 162
		With ribs							●	●	●						From p. 155	From p. 160	From p. 162

Oval Pad ZP/ZP2 Series

Variations ▸ p. 167

Pad form		Series	Symbol	Pad size (Breadth x Length) [mm] 2 x 4	3.5 x 7	4 x 10	4 x 20	4 x 30	5 x 10	5 x 20	5 x 30	6 x 10	6 x 20	6 x 30	8 x 20	8 x 30	Page: Dimensions/ Models	Page: Construction	Page: Mounting bracket assembly
Oval		ZP	U	●	●	●											From p. 171	From p. 185	From p. 189
		ZP2	W				●	●	●	●	●	●	●	●	●	●	From p. 180	From p. 187	From p. 195

High Rigidity Pad ZP3E Series

Variations ▸ p. 203

Pad form		Symbol	Pad diameter [mm] ø32	ø40	ø50	ø63	ø80	ø100	ø125	Page: Dimensions/ Models	Page: Construction	Page: Mounting bracket assembly
Flat		With groove	●	●	●	●	●	●	●	From p. 209	From p. 233	From p. 237
		Ball joint, With groove	●	●	●	●	●	●	●	From p. 215	From p. 235	From p. 241
Bellows		With ribs and groove	●	●	●	●	●	●	●	From p. 221	From p. 233	From p. 237
		Ball joint, With ribs and groove	●	●	●	●	●	●	●	From p. 227	From p. 235	From p. 241

Pads for Special Applications

Variations ▸ p. 249

Pad form				Series	Symbol	Pad diameter [mm]	Page (How to order)
Mark-free pad	Flat	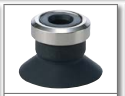	—	ZP2	U, CL	ø4 ø6 ø8 ø10 ø16 ø25 ø32 ø40 ø50	p. 253
			With ribs	ZP2	H, CL/ NT/FT	ø40 ø50 ø63 ø80 ø100 ø125	p. 254
			With groove	ZP3E	UM, CL	ø32 ø40 ø50 ø63 ø80 ø100 ø125	p. 208
			With groove, Ball joint type	ZP3E	F, UM, CL	ø32 ø40 ø50 ø63 ø80 ø100 ø125	p. 214
	Bellows		With ribs and groove	ZP3E	BM, CL	ø32 ø40 ø50 ø63 ø80 ø100 ø125	p. 220
			With groove, Ball joint type	ZP3E	F, BM, CL	ø32 ø40 ø50 ø63 ø80 ø100 ø125	p. 226
	Resin attachment		—	ZP2	K	ø6 ø8 ø10 ø13 ø16 ø20 ø25 ø32	p. 264
For film adsorption			With groove	ZP3P	PT	ø20 ø25 ø35 ø50	p. 267
Multistage			4.5-stage	ZP2	ZJ	ø15 ø20 ø30 ø40 ø46	p. 276
			2.5-stage 3.5-stage	ZP2	J	ø6 ø9 ø10 ø14 ø15 ø16 ø25 ø30	p. 282
Flat pad			With groove	ZP2	MT	ø10 ø15 ø20 ø25 ø30	p. 286
Nozzle type			—	ZP2	AN	ø0.8 ø1.1	p. 289
Sponge			—	ZP2	S	ø4 ø6 ø8 ø10 ø15	p. 290
For disk adsorption			—	ZP2	Z1		p. 294
For panel holding			—	ZP2	Z		p. 295
With ball spline buffer			Flat type	ZP2	U, S	ø2 ø4 ø6 ø8	p. 297
Vacuum saving valve				ZP2V			p. 346
Non-contact gripper				XT661			p. 362
Magnet gripper				MHM			p. 373

Select from pad forms

			Basic	Compact	High rigidity	Oval	
			ZP	ZP3	ZP3E	ZP	ZP2
Flat	Flat type	• For the adsorption of general workpieces • For the adsorption of workpieces with flat and non-deformed surfaces	p. 31	p. 136			
	Flat type with ribs	• For workpieces which are likely to become deformed • For the reliable release of workpieces	p. 50				
	Flat type with groove	• For workpieces which are likely to become deformed • For the reliable release of workpieces		p. 142	p. 208		
	Ball joint, Flat type	• For the adsorption of workpieces with inclined or curved surfaces	p. 61				
	Ball joint, Flat type with groove	• For the adsorption of workpieces with inclined or curved surfaces • For workpieces which are likely to become deformed • For the reliable release of workpieces			p. 214		
Bellows	Bellows type	• For the adsorption of workpieces with inclined surfaces • For workpieces of varying heights	p. 67	p. 148			
	Bellows type with ribs	• For the adsorption of workpieces with inclined surfaces • For workpieces of varying heights • For the reliable release of workpieces		p. 154			
	Bellows type with ribs and groove	• To be used when the adsorption surface of the workpieces is slanted • For the reliable release of workpieces			p. 220		
	Ball joint, Bellows type with ribs and groove	• For the adsorption of workpieces with inclined or curved surfaces • For the reliable release of workpieces			p. 226		
Thin flat	Thin flat type	• For workpieces which are likely to become deformed	p. 86				
	Thin flat type with ribs	• For workpieces which are likely to become deformed • For the reliable release of workpieces	p. 95				
Deep	Deep type	• For workpieces with curved surfaces	p. 104				
Oval	Oval flat type	• For workpieces with adsorption surface limitations • For use when a large adsorption area is required for long and narrow workpieces				p. 170	p. 179

Select according to the workpiece, application, or industry

Film packaging

Packaging facility | Food

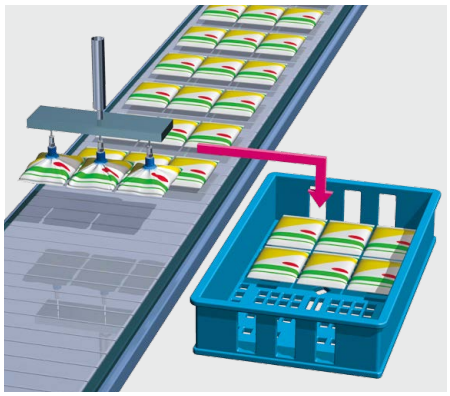

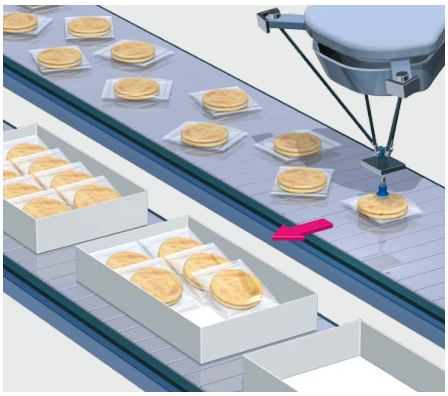

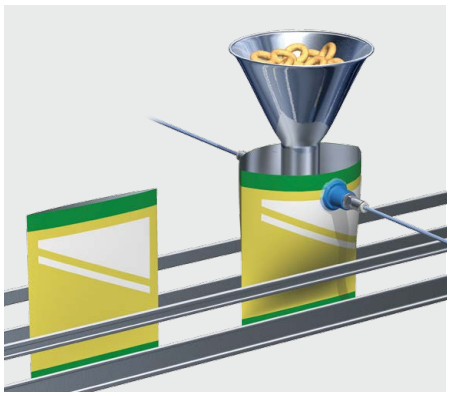

· Good for film packaging applications



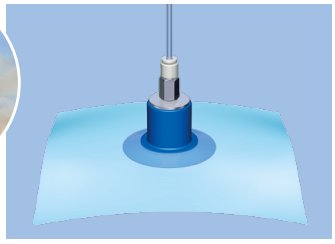

· For the adsorption of workpieces randomly moving at high speed

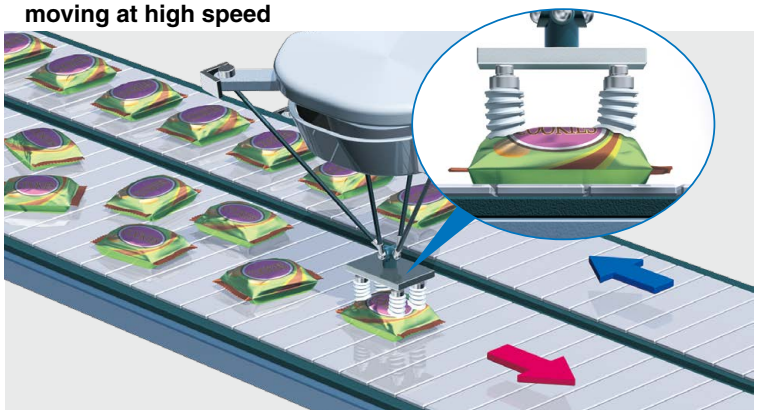

Applicable Pads

FDA regulation compliant

For Film Adsorption ZP3P

p. 266



4.5-Stage Bellows Pad ZP2

p. 276



Corrugated boards

Carton former | Palletizer | Food

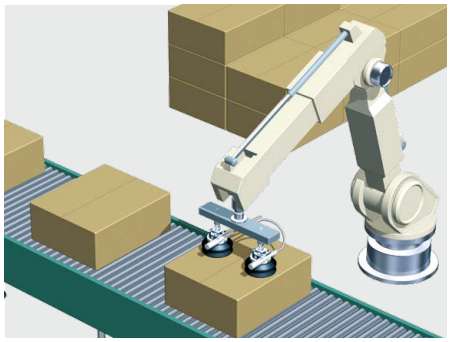

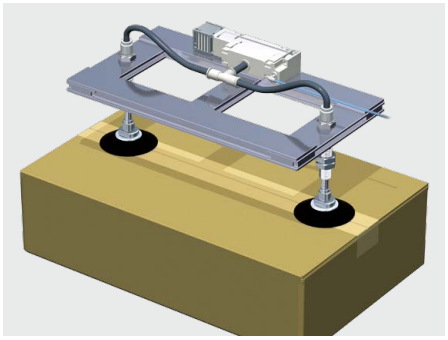

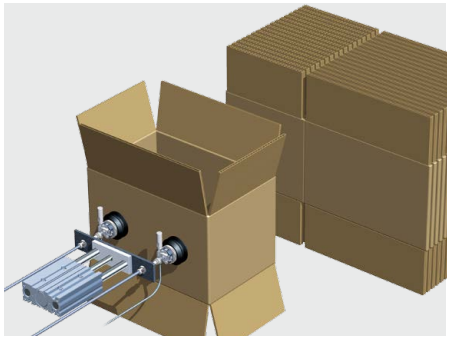

Applicable Pads

High Rigidity Pad ZP3E

p. 200





Select according to the workpiece, application, or industry

Glass

Automobile Electronics

· For use where adsorption marks must not be left on workpieces

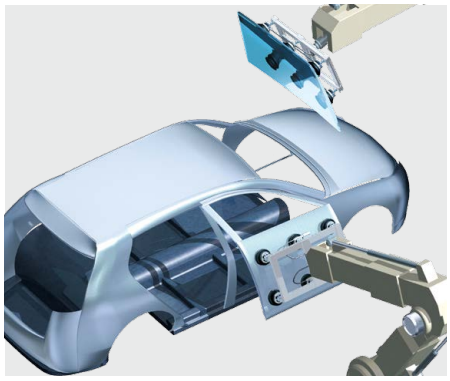



Applicable Pads

Mark-free Pad ZP3E
p. 200



Mark-free Pad ZP2
p. 251



FPD, Glass circuit boards

Automobile Electronics

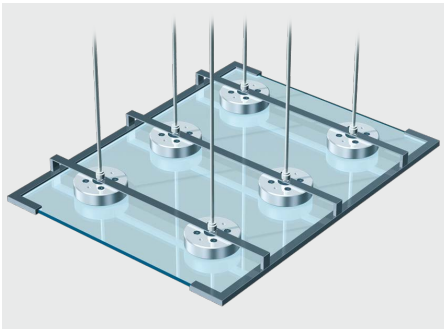

Applicable Pads

Mark-free Pad ZP3E
p. 200



Mark-free Pad ZP2
p. 251



Non-contact Gripper XT661
p. 353



Iron plates, Metal

Automobile

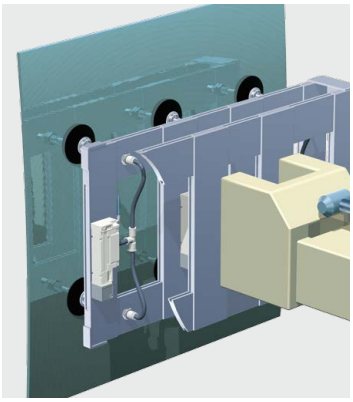

Applicable Pads

High Rigidity Pad ZP3E
p. 200



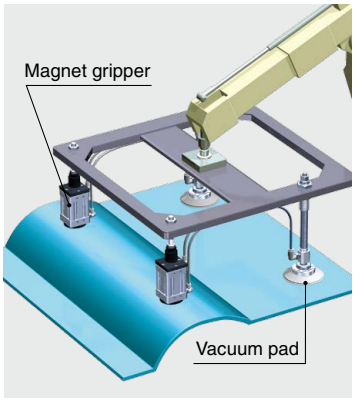

Applicable Pads

Magnet Gripper MHM
p. 372



IC chips

Electronics



Applicable Pads

Nozzle Pad ZP2
p. 289



Compact Type ZP3
p. 132



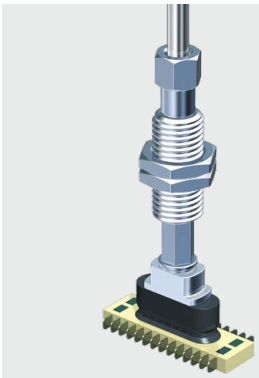

Applicable Pads

Oval Pad ZP
p. 170



Oval Pad ZP2
p. 179





Applicable Pads

Pad with Ball Spline Buffer ZP2
p. 297



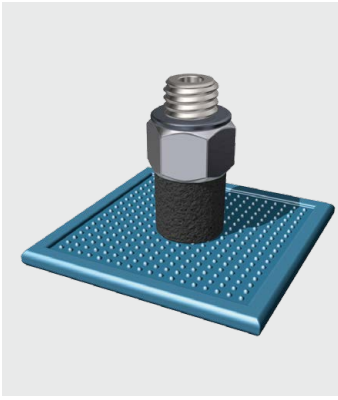

Applicable Pads

Sponge Pad ZP2
p. 290



Solar battery cells

Electronics

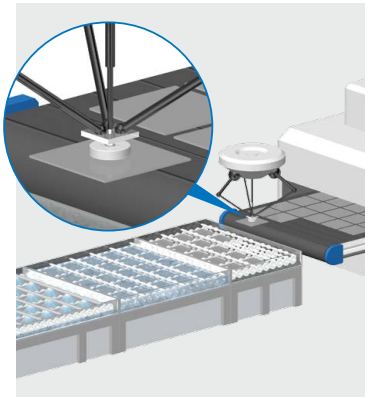

Applicable Pads

Non-contact Gripper XT661
p. 353



Circuit boards with holes

Electronics

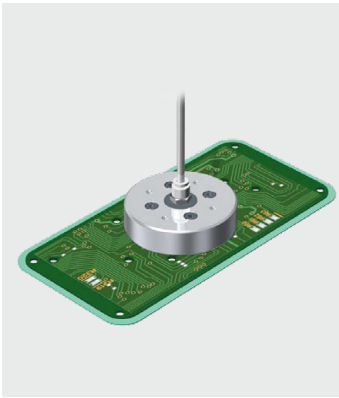

Applicable Pads

Non-contact Gripper XT661
p. 353



Mounting Bracket Assembly Model Index

	Assembly part no.		Basic ZP Standard	Basic ZP Ball joint	Compact ZP3 Standard	Oval ZP Standard	Oval ZP2 Standard	High Rigidity ZP3E Standard	High Rigidity ZP3E Ball joint	Special applications: Mark-free ZP2 Standard	Mark-free ZP2 Ball joint	Mark-free ZP3E Standard	Mark-free ZP3E Ball joint	Multistage ZP2 J	Multistage ZP2 ZJ	Flat ZP2 MT	Nozzle ZP2 AN	Sponge ZP2 S	For film adsorption ZP3P Standard
ZP	ZPB1	Buffer plate	From p. 124			From p. 192				From p. 124									
ZP	ZPB(1/2/3)(J/K)-	Buffer assembly	From p. 124	From p. 124		From p. 192	From p. 196			From p. 124									p. 275
ZP	ZPR(S/L)-	Adapter assembly	From p. 122			From p. 190	From p. 195			From p. 122				p. 284					
ZP	ZPRF(1/2/3)-	Adapter assembly/ Ball joint		From p. 128															
ZP	ZPT(1/2/3/4)-	Adapter assembly	From p. 121			From p. 189				From p. 121				From p. 283					
ZP	ZPTF(1/2/3)-	Adapter assembly/ Ball joint		From p. 127															
ZP	ZPY(1/2/3/4)-	Adapter assembly	From p. 123			From p. 191				From p. 123				p. 285					
ZP2	ZPA-	Adapter assembly								From p. 255									
ZP2	ZPB-	Buffer assembly								From p. 257									
ZP2	ZP2A-	Adapter					From p. 195				p. 261				p. 281	p. 288	p. 289	p. 293	
ZP2	ZP2B-	Buffer assembly									From p. 262								
ZP3	ZP3A-	Adapter assembly			From p. 162														
ZP3	ZP3B-	Buffer assembly			p. 164														
ZP3E	ZP3EA-	Holder, Plate, Stopper, Set screw, Adapter						From p. 237	From p. 241			From p. 237	From p. 241						
ZP3E	ZP3EA-F	Ball joint assembly							p. 241				p. 241						
ZP3E	ZP3EB-	Buffer assembly						p. 240				p. 240							
ZP3E	ZP3EU-(T/Y)F	Ball joint buffer unit							p. 244				p. 244						
ZP3E	ZP3EU-F	Ball joint unit							From p. 242				From p. 242						
ZP3P	ZP3PA-	Adapter assembly																	p. 275
Mounting nut	NTJ-015A		From p. 121			From p. 190	p. 195			From p. 121				From p. 283					
Mounting nut	ZPNA-M6		From p. 121			From p. 190			p. 241	From p. 121				From p. 283					
Mounting nut	ZPNA-M6A				From p. 163														
Mounting nut	ZPNA-M8		From p. 121	p. 127		From p. 192				From p. 121				From p. 283					
Mounting nut	ZPNA-M8A				p. 164														
Mounting nut	ZPNA-M10		From p. 124	From p. 127	p. 163		From p. 196			From p. 124									p. 124
Mounting nut	ZPNA-M12								p. 241										
Mounting nut	ZPNA-M12A				p. 163														
Mounting nut	ZPNA-M12C														p. 281				
Mounting nut	ZPNA-M14		From p. 124	From p. 127				From p. 237	From p. 242	From p. 124									p. 124
Mounting nut	ZPNA-M14A														p. 281				
Mounting nut	ZPNA-M16							From p. 237	From p. 242			p. 237	p. 242						
Mounting nut	ZPNA-M18							p. 240	p. 244			p. 240	p. 244						
Mounting nut	ZPNA-M22							p. 240	p. 244			p. 240	p. 244						

Vacuum Pads

Basic Pad
ZP Series

p. 26

Compact Type
ZP3 Series

p. 132

Oval Pad
ZP/ZP2 Series
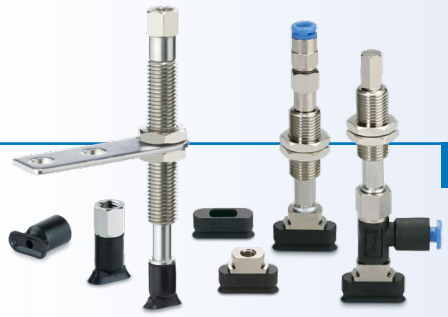
p. 166

High Rigidity Pad
ZP3E Series

p. 200

Pads for Special Applications
ZP2/ZP3P Series

p. 248

Made to Order
ZP/ZP2 Series

p. 298

Vacuum Saving Valve
ZP2V Series

p. 344

Non-contact Gripper
XT661 Series

p. 353

Magnet Gripper
MHM-X6400

p. 372

CONTENTS

Model Selection ..... p. 4

Basic Pad *ZP Series* p. 26

ø2, ø4, ø6, ø8, ø10, ø13, ø16, ø20, ø25, ø32, ø40, ø50



Variations ..... p. 27
Specifications ..... p. 29

Flat Type
How to Order ..... p. 31
Dimensions/Models ..... p. 32

Flat Type with Ribs
How to Order ..... p. 50
Dimensions/Models ..... p. 51

Flat, Ball Joint Type
How to Order ..... p. 61
Dimensions/Models ..... p. 62

Bellows Type
How to Order ..... p. 67
Dimensions/Models ..... p. 68

Thin Flat Type
How to Order ..... p. 86
Dimensions/Models ..... p. 87

Thin Flat Type with Ribs
How to Order ..... p. 95
Dimensions/Models ..... p. 96

Deep Type
How to Order ..... p. 104
Dimensions/Models ..... p. 105

Construction
Flat type/Flat type with ribs/Bellows type/Thin flat type/
Thin flat type with ribs/Deep type ..... p. 115
Flat, Ball joint type ..... p. 119

Mounting Bracket Assembly
Flat type/Flat type with ribs/Bellows type/Thin flat type/
Thin flat type with ribs/Deep type ..... p. 121
Flat, Ball joint type ..... p. 127

Specific Product Precautions ..... p. 165

Compact Type *ZP3 Series* p. 132

ø1.5, ø2, ø3.5, ø4, ø6, ø8, ø10, ø13, ø16



Features ..... p. 133
Variations ..... p. 134
Specifications ..... p. 135

Flat Type
How to Order ..... p. 136
Dimensions/Models ..... p. 137

Flat Type with Groove
How to Order ..... p. 142
Dimensions/Models ..... p. 143

Bellows Type
How to Order ..... p. 148
Dimensions/Models ..... p. 149

Bellows Type with Ribs
How to Order ..... p. 154
Dimensions/Models ..... p. 155

Construction ..... p. 160
Mounting Bracket Assembly ..... p. 162

Specific Product Precautions ..... p. 165

Oval Pad *ZP/ZP2 Series* p. 166

2 x 4, 3.5 x 7, 4 x 10, 4 x 20, 4 x 30, 5 x 10, 5 x 20, 5 x 30, 6 x 10, 6 x 20, 6 x 30, 8 x 20, 8 x 30



ZP Series **ZP2 Series**

Variations ..... p. 167
Specifications ..... p. 168

Oval Flat Type/ZP Series
How to Order ..... p. 170
Dimensions/Models ..... p. 171

Oval Flat Type/ZP2 Series
How to Order ..... p. 179
Dimensions/Models ..... p. 180

Construction
ZP Series ..... p. 185
ZP2 Series ..... p. 187
Mounting Bracket Assembly
ZP Series ..... p. 189
ZP2 Series ..... p. 195

Specific Product Precautions ..... p. 198

High Rigidity Pad *ZP3E Series* p. **200**
ø32, ø40, ø50, ø63, ø80, ø100, ø125



Features ..... p. 201
Variations ..... p. 203
Specifications ..... p. 204

Flat Type with Groove
How to Order ..... p. 208
Dimensions/Models ..... p. 209

Ball Joint, Flat Type with Groove
How to Order ..... p. 214
Dimensions/Models ..... p. 215

Bellows Type with Ribs and Groove
How to Order ..... p. 220
Dimensions/Models ..... p. 221

Ball Joint, Bellows Type with Ribs and Groove
How to Order ..... p. 226
Dimensions/Models ..... p. 227

Construction
Standard Type ..... p. 233
Ball Joint Type ..... p. 235
Mounting Bracket Assembly
Standard Type ..... p. 237
Ball Joint Type ..... p. 241

How to Replace the Pad ..... p. 245
Specific Product Precautions ..... p. 246

Pads for Special Applications *ZP2/ZP3P Series* p. **248**
ø0.8 to ø125

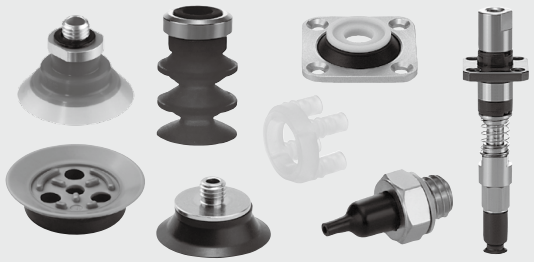

Pad Material ..... p. 248
Variations ..... p. 249

Mark-free
Mark-free Pad Series ZP2/ZP3E Series ..... p. 251
Mark-free Pad
ø4, ø6, ø8, ø10, ø16, ø25, ø32, ø40, ø50 ..... p. 253
Mark-free Pad/High Rigidity
ø40, ø50, ø63, ø80, ø100, ø125 ..... p. 254
Mounting Bracket Assembly ..... p. 255
Mounting Bracket Assembly (Ball Joint Type) ..... p. 261
Resin Attachment
ø6, ø8, ø10, ø13, ø16, ø20, ø25, ø32 ..... p. 264

Specific Product Precautions ..... p. 265

For Film Adsorption
Vacuum Pad ZP3P Series
ø20, ø25, ø35, ø50 ..... p. 266
[Pad Unit] How to Order, Dimensions ..... p. 267
[With Adapter] How to Order, Dimensions ..... p. 268
[With Buffer] How to Order, Dimensions ..... p. 271
Construction ..... p. 274
Parts Structure ..... p. 275

Multistage
Bellows Pad (4.5-Stage)
ø15, ø20, ø30, ø40, ø46 ..... p. 276
[Pad Unit] How to Order, Dimensions ..... p. 276
[With Adapter] How to Order, Dimensions ..... p. 277
Component Parts ..... p. 279
Pad Displacement to Vacuum Pressure ..... p. 280
Mounting Bracket Assembly ..... p. 281
Bellows Pad (2.5/3.5-Stage)
ø6, ø9, ø10, ø14, ø15, ø16, ø25, ø30 ..... p. 282
Mounting Bracket Assembly ..... p. 283

Flat

Flat Pad
ø10, ø15, ø20, ø25, ø30 ..... p. 286
[Pad Unit] How to Order, Dimensions ..... p. 286
[With Adapter] How to Order, Dimensions ..... p. 287
Mounting Bracket Assembly ..... p. 288

Nozzle

Nozzle Pad
ø0.8, ø1.1 ..... p. 289

Sponge

Sponge Pad
ø4, ø6, ø8, ø10, ø15 ..... p. 290
[Pad Unit] How to Order, Dimensions ..... p. 290
[With Adapter] How to Order, Dimensions ..... p. 291
Mounting Bracket Assembly ..... p. 293

For Disk Adsorption

Vacuum Pad for Disk Adsorption ..... p. 294

For Panel Holding

Vacuum Pad for Panel Holding ..... p. 295

Ball Spline Buffer

Pad with Ball Spline Buffer
ø2, ø4, ø6, ø8 ..... p. 297

Made to Order *ZP/ZP2 Series* p. **298**
ø2 to ø340



Pad Material ..... p. 298
Variations ..... p. 299

Compact/Short-type

Compact Pad
ø3, ø4, ø6, ø7, ø8 ..... p. 304

Short-type Pad (Flat type)
ø2, ø3.5, ø4, ø5, ø6, ø8, ø10, ø15 ..... p. 305

Short-type Pad (Flat type)
ø2, ø4, ø6, ø8, ø15 ..... p. 308

Short-type Pad (Flat type)
ø2, ø3, ø4, ø6, ø8 ..... p. 311

Thin Flat

Thin Flat Pad
ø5, ø6, ø11, ø14, ø18, ø20 ..... p. 312
Mounting Bracket Assembly ..... p. 313

Bellows

Bellows Pad (Bellows type)
ø4, ø6, ø8, ø10, ø15, ø20 ..... p. 314

Bellows Pad (Bellows type)
ø2, ø4, ø5, ø6 ..... p. 316

High Rigidity

High Rigidity Pad (Flat type with ribs/Thin flat type with ribs)
ø32, ø150, ø250, ø300, ø340 ..... p. 317

High Rigidity Pad (Bellows type)
ø32, ø150 ..... p. 319

High Rigidity Pad (Oval type)
30 x 50 ..... p. 320

High Rigidity Ball Joint Pad (Flat type with ribs)
ø40, ø50, ø63, ø80, ø100, ø125 ..... p. 321

High Rigidity Ball Joint Pad (Bellows type)
ø40, ø50, ø63, ø80, ø100, ø125 ..... p. 327

High Rigidity Pad (Flat type with ribs/Bellows type)
ø40, ø50, ø63, ø80, ø100, ø125 ..... p. 333

Specific Product Precautions ..... p. 343

Vacuum Saving Valve *ZP2V Series* p. **344**



Non-contact Gripper *XT661 Series* p. **353**



Magnet Gripper *MHM-X6400* p. **372**



Safety Instructions ..... p. 375
Vacuum Equipment Precautions ..... p. 376
Vacuum Pads Precautions ..... p. 379

Vacuum Equipment Model Selection

1 Features and Precautions for Vacuum Adsorption p. 5

2 Vacuum Pad Selection p. 5

- **Vacuum Pad Selection Procedures**
- **Points for Selecting Vacuum Pads**
  - A. Shear Force and Moment Applied to Vacuum Pads
  - B. Theoretical Lifting Force
- **Lifting Force and Vacuum Pad Diameter**
- **Vacuum Pad Type**
- **Vacuum Pad Material**
- **Rubber Material and Properties**
- **Buffer Attachment**
- **Pad Selection by Workpiece Type**
- **Vacuum Pad Durability**

3 Vacuum Ejector and Vacuum Switching Valve Selection p. 12

- **Formula for Calculating Vacuum Ejector and Switching Valve Size**

4 Leakage Volume during Workpiece Adsorption p. 12

- **Leakage Volume from Conductance of Workpieces**
- **Leakage Volume from Suction Test**

5 Adsorption Response Time p. 13

- **Relationship between Vacuum Pressure and Response Time after Supply Valve (Switching Valve) is Operated**
- **Formula for Calculating Adsorption Response Time**
- **Adsorption Response Time from the Selection Graph**

6 Precautions for Vacuum Equipment Selection and SMC's Proposals p. 15

- **Safety Measures**
- **Precautions for Vacuum Equipment Selection**
- **Vacuum Ejector or Pump and Number of Vacuum Pads**
- **Vacuum Ejector Selection and Handling Precautions**
- **Supply Pressure of Vacuum Ejector**
- **Timing for Vacuum Generation and Suction Verification**
  - A. Timing for Vacuum Generation
  - B. Suction Verification
  - C. Set Pressure for Vacuum Pressure Switch
- **Dust and Vacuum Equipment**

7 Vacuum Equipment Selection Example p. 19

- **Transfer of Semiconductor Chips**

8 Data p. 20

- **Selection Graph**
- **Glossary of Terms**
- **Countermeasures for Vacuum Adsorption Problems (Troubleshooting)**
- **Examples of Non-conformance**
- **Vacuum Pad Replacement Period**

1 Features and Precautions for Vacuum Adsorption

Systems which use vacuum adsorption as a method to hold workpieces have the following features.

- Compared with mechanical grippers and other similar products, they have a simpler construction and fewer moving parts.
- Workpieces of any shape can be adsorbed if they have an adsorption surface.
- No need for accurate positioning
- Compatible with soft and easily-deformed workpieces

However, special care is required regarding the following.

- Be careful not to drop workpieces during transfer. (Make sure there is no excessive acceleration, vibration, or impact.)
- The piping may become clogged by liquid or particles suctioned near the workpieces.
- It is necessary to appropriately position the pads in order to transfer heavy objects.
- The vacuum pads (rubber) will deteriorate at a rate depending on the operating environment and conditions.
- As the product life (replacement period) depends on the customer's operating conditions, it cannot be estimated beforehand.

A suction test with the actual equipment is recommended before selecting the product model.

Consider the features and precautions shown above, perform periodic maintenance, and take corrective actions regarding the operating conditions.

2 Vacuum Pad Selection

Vacuum Pad Selection Procedures

1) Fully taking into account the balance of a workpiece, identify the suction position, number of pads, and applicable pad diameter (or pad area).
   * When selecting a model based on workpiece mass, there is a possibility that the workpieces won't be able to be adsorbed or that they will be dropped depending on the operating conditions (workpiece balance, transfer acceleration, pressure or friction force applied to the workpieces during transfer, etc.).
2) Find the theoretical lifting force from the identified adsorption area (pad area x number of pads) and the vacuum pressure, and then find the lifting force considering the safety factor of the actual lifting method and transfer conditions.
   * Use the calculated values as a guideline (reference value) and check the actual values by performing a suction test as necessary.
3) Determine the necessary pad diameter (pad area) and suction position (workpiece balance) so that the lift force is larger than the weight of the workpieces.
4) Determine the pad form and materials, the necessity of a buffer based on the operating environment, and the workpiece shape and materials.
5) This product is not designed to hold vacuum.
6) Perform a suction test with the actual equipment to determine whether or not the product can be used.

The above shows the selection procedure for general vacuum pads; thus, it is not applicable to all pads. Customers are required to conduct a test on their own and to select applicable suction conditions and pads based on their test results.

Points for Selecting Vacuum Pads

A. Shear Force and Moment Applied to Vacuum Pads

a) Vacuum pads are susceptible to shear force (parallel force with adsorption surface) and moment.
b) Minimize the moment applied to the vacuum pads with the position of the workpiece center of gravity in mind.
c) The acceleration rate of the movement must be as small as possible, so be sure to take into consideration the wind pressure and impact. If measures to slow down the acceleration rate are introduced, workpieces will be less likely to be dropped.
d) Avoid lifting workpieces by adsorbing the vertical side with vacuum pads (vertical lifting).
   When it is unavoidable, a sufficient safety factor must be secured.

Lifting Force, Moment, Horizontal Force

(Refer to Fig. 1) To lift workpieces vertically, be sure to take into consideration the acceleration rate, wind pressure, impact, etc., in addition to the mass of the workpieces.
(Refer to Fig. 2) Because the pads are susceptible to moments, mount the pads so as not to allow the workpieces to create a moment.
(Refer to Fig. 3) When workpieces that are suspended horizontally are moved laterally, they could shift depending on the extent of the acceleration rate or the size of the friction coefficient between the pad and the workpiece. Therefore, the acceleration rate of the lateral movement must be minimized.

Fig. 1

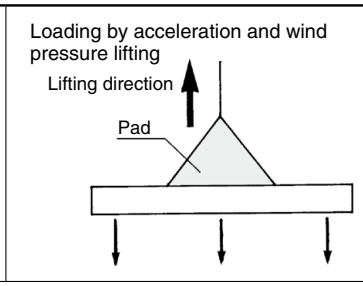

Fig. 2

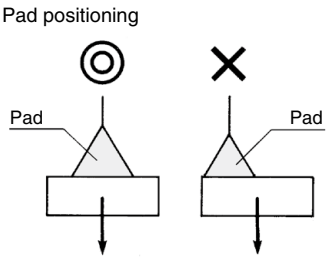

Fig. 3

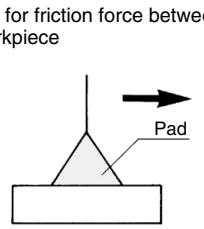

Balance of Pad and Workpiece

1) Make sure that the pad's adsorption area is not larger than the surface of the workpiece to prevent vacuum leakage and unstable suction.

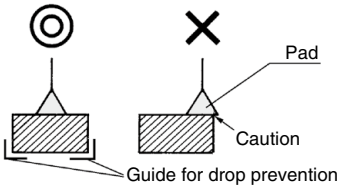

2) If multiple pads are used for transferring a flat object with a large surface area, properly allocate the pads to maintain balance. Also, make sure that the pads are aligned properly to prevent them from becoming disengaged along the edges.

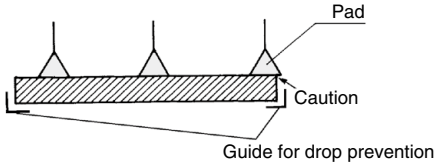

Provide an auxiliary device (example: a guide for preventing workpieces from dropping) as necessary.

* Mount the guide for drop prevention so that no load is applied to the workpieces (it does not push the workpieces up). If a load is applied, it is applied to the pad when the guide for drop prevention is removed. This may cause workpieces to be dropped.

3) Consider that the load may increase at a certain place due to the suction balance.

Formula examples with beams (Reference)

Load/Shape conditions	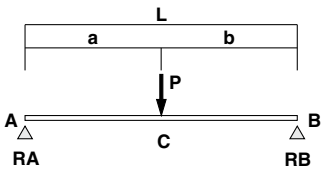	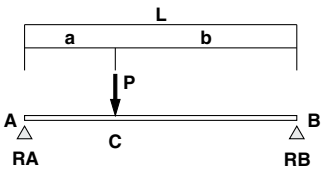	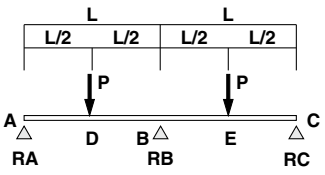
Formula (Reactive force: **R**, Total load: **W**)	**RA = RB = P/2** **W = P**	**RA = Pb/L** **RB = Pa/L** **W = P**	**RA = RC = 5Pb/16** **RB = 11P/8**

Mounting Position

The basic mounting method is a horizontal lift.
Do not perform suction when tilted, vertical suction, or holding suction (as the pads receive the load of the workpieces). If the unit must be installed in such a manner, be sure to provide a guide and take appropriate safety measures.
The vacuum pad is designed for workpiece transfer while suctioned from above. If workpieces are to be suctioned from below or held with the pad after being positioned by other components, perform a suction test to determine whether or not the transfer method is applicable.

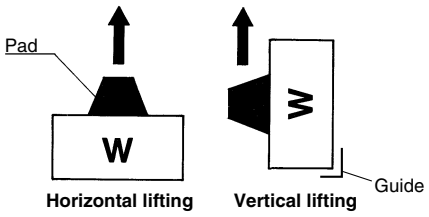

B. Theoretical Lifting Force

- The theoretical lifting force is determined by the vacuum pressure and the contact area of the vacuum pad.
- Since the theoretical lifting force is the value measured at the static state, the safety factor responding to the actual operating conditions must be estimated.
- It is not necessarily true that higher vacuum pressure is better. Extremely high vacuum pressure may cause problems.
  - If the vacuum pressure is higher than necessary, an increase in the friction of the pads, the generation of cracks, the sticking of the pads to workpieces, and the sticking of the pads (bellows pad) are more likely to occur, possibly shortening the life of the pads.
  - Doubling the vacuum pressure makes the theoretical lifting force double, while doubling the pad diameter makes the theoretical lifting force quadruple.
  - When the vacuum pressure (set pressure) is high, it makes not only the response time longer but also the necessary energy to generate vacuum larger.

Example) Theoretical lifting force = Pressure x Area

2 times

Pad diameter	Area [cm²]	**Vacuum pressure [–40 kPa]**	Vacuum pressure [–80 kPa]
ø20	3.14	**Theoretical lifting force 12 N**	Theoretical lifting force 25 N
ø40	12.56	**Theoretical lifting force 50 N**	Theoretical lifting force 100 N

4 times

Lifting Force and Vacuum Pad Diameter

- The vacuum pressure should be set below the pressure that has been stabilized after adsorption. However, when workpieces are permeable or have a rough surface, note that the vacuum pressure drops since the workpieces take in air. In such cases, it is necessary to perform a suction test to check the vacuum pressure reached during suction.
- The vacuum pressure when using an ejector is approximately –40 to –60 kPa as a guide.

The theoretical lifting force of a pad can be found by calculation or from the theoretical lifting force table.

Calculation

$$W = P \times S \times 0.1 \times \frac{1}{t}$$

W: Lifting force [N]
P: Vacuum pressure [kPa]
S: Pad area [cm²]
t: Safety factor Horizontal lifting: 4 or more
Vertical lifting: 8 or more

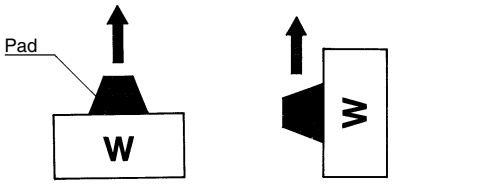

Horizontal lifting **Vertical lifting**

(This type of application should generally be avoided.)

Theoretical Lifting Force

The theoretical lifting force (not including the safety factor) can be determined by the pad diameter and vacuum pressure.
The required lifting force can then be determined by dividing the theoretical lifting force by the safety factor t.

Lifting force = **Theoretical lifting force** ÷ **t**

Theoretical Lifting Force (Theoretical lifting force = P x S x 0.1)

Pad Size (ø1.5 to ø50) [N]

Pad size [mm]		ø1.5	ø2	ø3.5	ø4	ø6	ø8	ø10	ø13	ø16	ø20	ø25	ø32	ø40	ø50
S: Pad area [cm²]		0.02	0.03	0.10	0.13	0.28	0.50	0.79	1.33	2.01	3.14	4.91	8.04	12.6	19.6
Vacuum pressure [kPa]	**–85**	0.15	0.27	0.82	1.07	2.40	4.2	6.6	11	17	26	41	68	106	166
	–80	0.14	0.25	0.77	1.00	2.26	4.0	6.2	10	16	25	39	64	100	157
	–75	0.13	0.24	0.72	0.94	2.12	3.7	5.8	10	15	23	36	60	94	147
	–70	0.12	0.22	0.67	0.88	1.98	3.5	5.5	9.3	14	22	34	56	87	137
	–65	0.11	0.20	0.63	0.82	1.84	3.2	5.1	8.6	13	20	31	52	81	127
	–60	0.11	0.19	0.58	0.75	1.70	3.0	4.7	8.0	12	18	29	48	75	117
	–55	0.10	0.17	0.53	0.69	1.55	2.7	4.3	7.3	11	17	27	44	69	107
	–50	0.09	0.16	0.48	0.63	1.41	2.5	3.9	6.7	10	15	24	40	62	98
	–45	0.08	0.14	0.43	0.57	1.27	2.2	3.5	6.0	9.0	14	22	36	56	88
	–40	0.07	0.13	0.38	0.50	1.13	2.0	3.1	5.3	8.0	12	19	32	50	78

Pad Size (ø63 to ø340) [N]

Pad size [mm]		ø63	ø80	ø100	ø125	ø150	ø200	ø250	ø300	ø340
S: Pad area [cm²]		31.2	50.2	78.5	122.7	176.6	314.0	490.6	706.5	907.5
Vacuum pressure [kPa]	**–85**	265	427	667	1043	1501	2669	4170	6005	7714
	–80	250	402	628	982	1413	2512	3925	5652	7260
	–75	234	377	589	920	1325	2355	3680	5299	6806
	–70	218	351	550	859	1236	2198	3434	4946	6353
	–65	203	326	510	798	1148	2041	3189	4592	5899
	–60	187	301	471	736	1060	1884	2944	4239	5445
	–55	172	276	432	675	971	1727	2698	3886	4991
	–50	156	251	393	614	883	1570	2453	3533	4538
	–45	140	226	353	552	795	1413	2208	3179	4084
	–40	125	201	314	491	706	1256	1962	2826	3630

Oval Pad (2 x 4 to 8 x 30, 30 x 50) [N]

Pad size [mm]		2 x 4	3.5 x 7	4 x 10	5 x 10	6 x 10	4 x 20	5 x 20	6 x 20	8 x 20	4 x 30	5 x 30	6 x 30	8 x 30	30 x 50
S: Pad area [cm²]		0.07	0.21	0.36	0.44	0.52	0.76	0.94	1.12	1.46	1.16	1.44	1.72	2.26	13.07
Vacuum pressure [kPa]	**–85**	0.60	1.79	3.0	3.7	4.4	6.4	7.9	9.5	12.4	9.8	12.2	14.6	19.2	112
	–80	0.56	1.68	2.8	3.5	4.1	6.0	7.5	8.9	11.6	9.2	11.5	13.7	18.0	105
	–75	0.53	1.58	2.7	3.3	3.9	5.7	7.0	8.4	10.9	8.7	10.8	12.9	16.9	98
	–70	0.49	1.47	2.5	3.0	3.6	5.3	6.5	7.8	10.2	8.1	10.0	12.0	15.8	92
	–65	0.46	1.37	2.3	2.8	3.3	4.9	6.1	7.2	9.4	7.5	9.3	11.1	14.6	85
	–60	0.42	1.26	2.1	2.6	3.1	4.5	5.6	6.7	8.7	6.9	8.6	10.3	13.5	79
	–55	0.39	1.16	1.9	2.4	2.8	4.1	5.1	6.1	8.0	6.3	7.9	9.4	12.4	72
	–50	0.35	1.05	1.8	2.2	2.6	3.8	4.7	5.6	7.3	5.8	7.2	8.6	11.3	66
	–45	0.32	0.95	1.6	1.9	2.3	3.4	4.2	5.0	6.5	5.2	6.4	7.7	10.1	59
	–40	0.28	0.84	1.4	1.7	2.0	3.0	3.7	4.4	5.8	4.6	5.7	6.8	9.0	53

Vacuum Pad Type

- Various types of vacuum pads are available such as flat, deep, bellows, thin flat, with ribs, oval, etc. Select the optimal form in accordance with the workpiece type and the operating environment. Please contact SMC for shapes not included in this catalog.

Pad Type

Pad form	Application
Flat type **Flat type with groove** 	To be used when the adsorption surface of workpieces is flat and not deformed
Flat type with ribs 	To be used when workpieces are likely to become deformed or for the reliable release of workpieces
Deep type 	To be used when workpieces are curved in shape
Bellows type **Bellows type with groove** 	To be used when there is not enough space to install a buffer or when the adsorption surface of workpieces is slanted
Oval type 	To be used when workpieces have a limited adsorption surface or are long in length and when the accurate positioning of workpieces is required

Pad form	Application
Ball joint pad 	To be used when the adsorption surface of workpieces is not horizontal
Conductive pad 	As a countermeasure against static electricity, rubber material with reduced resistance is used.
For film adsorption 	For film packaging applications
Nozzle type 	For small workpieces such as IC chips
Sponge 	For workpieces with bumps

Vacuum Pad Material

- It is necessary to determine vacuum pad materials carefully taking into account the shape of the workpieces, adaptability in the operating environment, effect after being adsorbed, electrical conductivity, etc.
- Based on the workpiece transfer example for each material, select after confirming the characteristics (adaptability) of the rubber.

Vacuum Pad/Workpiece Transfer Examples for Each Material

Material	Application
NBR	General workpieces, Corrugated boards, Veneer plates, Iron plates, etc.
Silicone rubber	Semiconductors, Removal from die-casting, Thin workpieces, Food processors
Urethane rubber	Corrugated boards, Iron plates, Veneer plates
FKM	Chemical workpieces
Conductive NBR	General semiconductor workpieces (Countermeasure against static electricity)
Conductive silicone rubber	Semiconductors (Countermeasure against static electricity)

- As the following materials are not suitable for use in specific environments, please select from the recommended materials.

Material	Specific environment	Example of problem	Recommended material
NBR, Conductive NBR	• Ozone environments <Examples> In clean rooms Around static removal equipment Around motor devices	Cracks are generated earlier on the portions to which stress is applied.	Silicone rubber Urethane rubber FKM Conductive silicone rubber
Urethane rubber	• High-temperature, high-humidity environments	Deformation, discoloration, or cracking occurs Adhesiveness increases	NBR Silicone rubber FKM Conductive silicone rubber

Rubber Material and Properties

◎ = Excellent --- Not affected at all, or almost no effect
○ = Good --- Affected a little, but adequate resistance depending on conditions
△ = Better not to use if possible
× = Unsuitable for usage. Severely affected.

	General name	NBR (Nitrile rubber)	Silicone rubber	Urethane rubber	FKM (Fluoro rubber)	CR (Chloroprene rubber)	EPR (Ethylene propylene rubber)	Conductive NBR (Nitrile rubber)	Conductive silicone rubber	Conductive silicone sponge	Conductive CR sponge (Chloroprene sponge)
	Main features	Good oil resistance, abrasion resistance, and aging resistance	Excellent heat resistance and cold resistance	Excellent mechanical strength	Best heat resistance and chemical resistance	Well balanced weather resistance, ozone resistance, and chemical resistance	Good aging resistance, ozone resistance, and electrical properties	Good oil resistance, abrasion resistance, and aging resistance Conductive	Excellent heat resistance and cold resistance Conductive	Excellent heat insulation and impact resilience	Excellent impact resilience and sound insulation Flame retardance
	Pure rubber property (specific gravity)	1.00-1.20	0.95-0.98	1.00-1.30	1.80-1.82	1.15-1.25	0.86-0.87	1.00-1.20	0.95-0.98	0.4 g/cm³	0.161 g/cm³
Physical properties of compounded rubber	Impact resilience	○	◎	◎	△	◎	○	○	◎	× to △	× to △
	Abrasion resistance	◎	× to △	◎	◎	◎	○	◎	× to △	×	×
	Tear resistance	○	× to △	◎	○	○	△	○	× to △	×	×
	Flex crack resistance	○	× to ○	◎	○	○	○	○	× to ○	×	×
	Max. operating temperature [°C]	120	200	60	250	150	150	100	200	180	120
	Min. operating temperature [°C]	0	–30	0	0	–40	–20	0	–10	–30	–20
	Volume resistivity [Ωcm]	—	—	—	—	—	—	10^4 or less	10^4 or less	10^5 or less	10^5 or less
	Heat aging	○	◎	△	◎	○	○	○	◎	△	△
	Weather resistance	×	◎	◎	◎	◎	○	×	◎	△	△
	Ozone resistance	×	◎	◎	◎	○	◎	×	◎	△	△
	Gas permeability resistance	○	× to △	× to △	× to △	○	× to △	○	× to △	×	×
Solvent resistance Oil resistance	Gasoline/Gas oil	◎	× to △	◎	◎	○	×	◎	× to △	×	×
	Benzene/Toluene	× to △	×	× to △	◎	× to △	×	× to △	×	×	×
	Alcohol	◎	◎	△	△ to ◎	◎	◎	◎	◎	△	△
	Ether	× to △	× to △	×	× to △	× to △	○	× to △	× to △	×	×
	Ketone (MEK)	×	○	×	×	△ to ○	◎	×	○	×	×
	Ethyl acetate	× to △	△	× to △	×	× to △	◎	× to △	△	×	×
Alkaline resistance Acid resistance	Water	◎	○	×	◎	◎	◎	◎	○	○	○
	Organic acid	× to △	○	×	△ to ○	× to △	×	× to △	○	×	×
	Organic acid of high concentration	△ to ○	△	×	◎	○	○	△ to ○	△	×	×
	Organic acid of low concentration	○	○	△	◎	◎	◎	○	○	×	×
	Strong alkali	○	◎	×	○	◎	◎	○	◎	△	△
	Weak alkali	○	◎	×	○	◎	◎	○	◎	△	△

∗ The indicated physical properties, chemical resistance, and other numerical values are only approximate values to be used for reference. They are not guaranteed values.
· The above general characteristics may change according to the working conditions and the working environment.
· When determining the material, carry out adequate confirmation and verification in advance.
· SMC will not bear responsibility concerning the accuracy of data or any damage arising from this data.

Buffer Attachment

- Choose the buffer type when the workpieces are of varying heights, the workpieces are fragile, or you need to reduce the impact to the pads. If rotation needs to be limited, use a non-rotating buffer.
- The buffer is manufactured for the purpose of protecting the pads from impact when the pads are applied to workpieces. An eccentric load applied to the buffer caused by piping (tubing) or the position of the attachment, or an improper tightening torque used when the buffer is attached may lead to poor sliding or a shortened product life. Also, minimize the load in the lateral direction.
- Prevent eccentric loads caused by piping (tubing) from being applied to the buffer. Route the tube piping with some degree of freedom, and ensure that it extends in the direction of the fitting. Also, make adjustments as required to prevent long piping, piping bundles, piping material, etc., from becoming a load.
- Use the buffer within the stroke.

Unsteady Distance between Pads and Workpieces

When the workpieces are of varying heights, use the buffer type pad with a built-in spring. The spring creates a cushion effect between the pads and the workpieces. If rotation needs to be limited further, use the non-rotating buffer type.

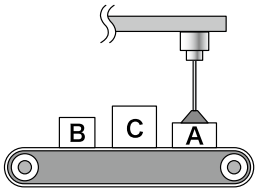

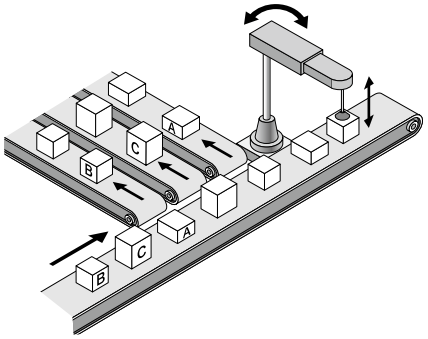

Pad Selection by Workpiece Type

- Carefully select the pads for the following workpieces.

1. Porous Workpieces

To adsorb permeable workpieces such as paper, select pads with a small diameter that are sufficient to lift the workpieces. Because a large amount of air leakage could reduce the pads' suction force, it may be necessary to increase the capacity of the ejector or vacuum pump or to enlarge the conductance area of the piping passage.

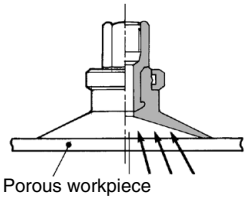

2. Flat Plate Workpieces

When workpieces with a large surface area such as sheet glass or PCB are suspended, the workpieces could move in a wavelike motion if a large force is applied by wind pressure or impact. Therefore, it is necessary to ensure the proper allocation and size of pads.

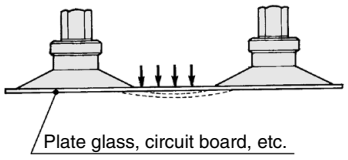

3. Soft Workpieces

When soft workpieces such as vinyl, paper, or thin sheets are adsorbed, the vacuum pressure could cause the workpieces to become deformed or wrinkle. In such cases, it will be necessary to use small pads or ribbed pads and reduce the vacuum pressure.

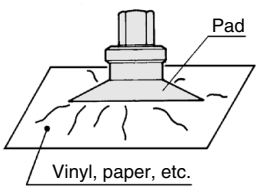

4. Impact to Pads

When pushing a pad to a workpiece, make sure not to apply an impact or a large force which would lead to premature deformation, cracking, or wearing of the pad. Pads should only be pushed against workpieces to the extent that their skirt portion deforms or their ribbed portion comes into slight contact with the workpieces. Especially, when using smaller diameter pads, make sure to position them correctly.

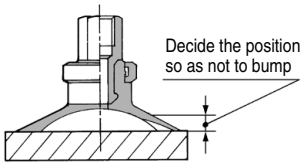

Pad Selection by Workpiece Type

5. Adsorption Marks

The main causes of adsorption marks are as follows:

	Before suction	After suction	Countermeasure
Marks due to deformed (lined) workpieces		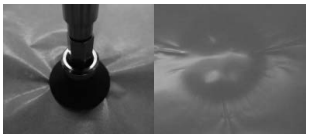	1) Reduce the vacuum pressure. If the lifting force is inadequate, increase the number of pads. 2) Select a pad with a smaller center area.
	Suction conditions: Workpiece: Vinyl Vacuum pad: ZP20CS Vacuum pressure: –40 kPa		
Marks due to components contained in the rubber pads (material) moving to the workpieces			Use the following products. 1) Mark-free NBR pad 2) ZP2 series • Fluororesin-coated pad • Resin attachment
	Suction conditions: Workpiece: Glass Vacuum pad: ZP20CS Vacuum pressure: –40 kPa		
Marks which remain on the rough surface of the workpieces due to wearing of the rubber (pad material)	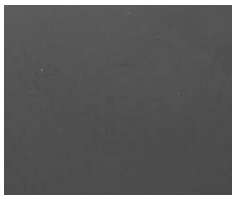		Use the following products. 1) ZP2 series • Fluororesin-coated pad • Resin attachment
	Suction conditions: Workpiece: Resin plate (Surface roughness 2.5 μ) Vacuum pad: ZP20CS Vacuum pressure: –80 kPa		

Vacuum Pad Durability

- The vacuum pads (rubber) need to be checked periodically for deterioration.
- When vacuum pads are used continuously, the following problems may occur.
  1) Wearing of the adsorption surface
     Shrinkage of the pad dimensions, sticking of the part where the rubber materials come into contact with each other (bellows pad)
  2) Weakening of the rubber parts (skirt of the adsorption surface, bending parts, etc.)

  ∗ This may occur at an early stage depending on the operating conditions (high vacuum pressure, suction time [vacuum holding], etc.).
- Decide when to replace the pads, referring to the signs of deterioration, such as changes in the appearance due to wear, reduction in the vacuum pressure, or delay in the transport cycle time.

3 Vacuum Ejector and Vacuum Switching Valve Selection

Formula for Calculating Vacuum Ejector and Switching Valve Size

Average suction flow rate for achieving adsorption response time

$$Q = \frac{V \times 60}{T_1} + Q_L$$

$$T_2 = 3 \times T_1$$

Q: Average suction flow rate [L/min (ANR)]
V: Piping capacity [L]
T_1: Arrival time to stable **Pv** 63% after adsorption [sec]
T_2: Arrival time to stable **Pv** 95% after adsorption [sec]
Q_L: Leakage volume during workpiece adsorption [L/min (ANR)] *1

Max. suction flow rate

Qmax = (2 to 3) x Q [L/min (ANR)]

<Selection Procedure>

- **Ejector**
  Select an ejector with a maximum suction flow rate greater than the **Qmax** indicated above.
- **Direct operation valve**

$$\text{Conductance } C = \frac{Qmax}{55.5} \text{ [dm}^3\text{/(s·bar)]}$$

∗ Select a valve (solenoid valve) with a conductance that is greater than that of the conductance **C** formula given above from the related equipment (**Web Catalog**).

∗1 Q_L: **0** when no leakage occurs during workpiece adsorption
If there is leakage during workpiece adsorption, find the leakage volume based on "4. Leakage Volume during Workpiece Adsorption."

∗ The tube piping capacity can be found in "8 Data: Piping Capacity by Tube I.D. (Selection Graph (2))."

4 Leakage Volume during Workpiece Adsorption

Air could be drawn in depending on the type of workpiece. As a result, the vacuum pressure in the pads declines and the amount of vacuum that is necessary for adsorption cannot be attained.
When this type of workpiece must be handled, it is necessary to select an ejector and vacuum switching valve of the proper size by taking into consideration the amount of air that could leak through the workpieces.

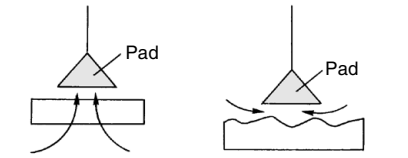

Leakage Volume from Conductance of Workpieces

Leakage volume $Q_L = 55.5 \times C_L$

Q_L: Leakage volume [L/min (ANR)]
C_L: Conductance between workpieces and pads, and workpiece opening area [dm³/(s·bar)]

Leakage Volume from Suction Test

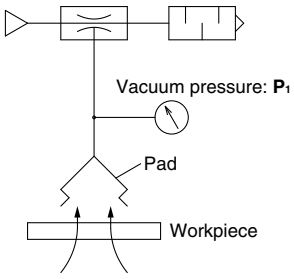

As described in the illustration to the left, adsorb the workpiece with the ejector, using the ejector, pad, and vacuum gauge. At this time, read the vacuum pressure **P_1**, obtain the suction flow rate from the flow rate characteristics graph for the ejector that is being used, and render this amount as the leakage of the workpiece.

Exercise: Using a supply pressure of 0.45 MPa, when the ejector (ZH07□S) adsorbed a workpiece that leaks air, the vacuum gauge indicated a pressure of –53 kPa. Calculate the leakage volume from the workpiece.

<Selection Procedure>

When obtaining the suction flow rate at a vacuum pressure of –53 kPa from the ZH07DS flow rate characteristics graph, the suction flow rate is 5 L/min (ANR). (Ⓐ→Ⓑ→Ⓒ)

Leakage volume ≈ Suction flow rate 5 L/min (ANR)

ZH07BS, ZH07DS

Exhaust Characteristics

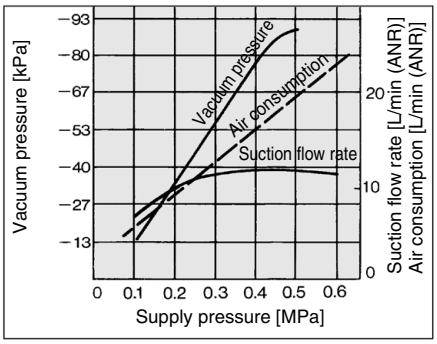

Flow Rate Characteristics
Supply pressure {0.45 MPa}

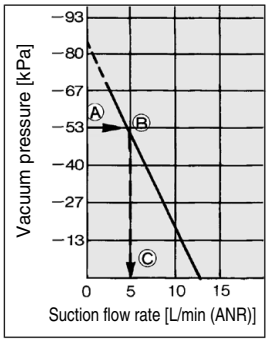

5 Adsorption Response Time

When vacuum pads are used for the adsorption transfer of workpieces, the approximate adsorption response time can be obtained (the length of time it takes for the pads' internal vacuum pressure to reach the pressure that is required for adsorption after the supply valve {vacuum switching valve} has been operated). An approximate adsorption response time can be obtained through formulas and selection graphs.

Relationship between Vacuum Pressure and Response Time after Supply Valve (Switching Valve) is Operated

The relationship between the vacuum pressure and the response time after the supply valve (switching valve) is operated is shown below.

Vacuum System Circuit

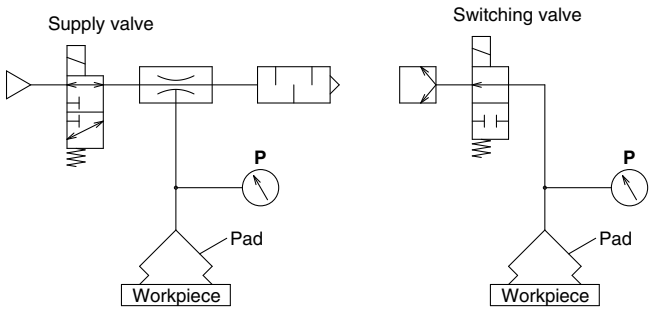

Vacuum Pressure and Response Time after Supply Valve (Switching Valve) is Operated

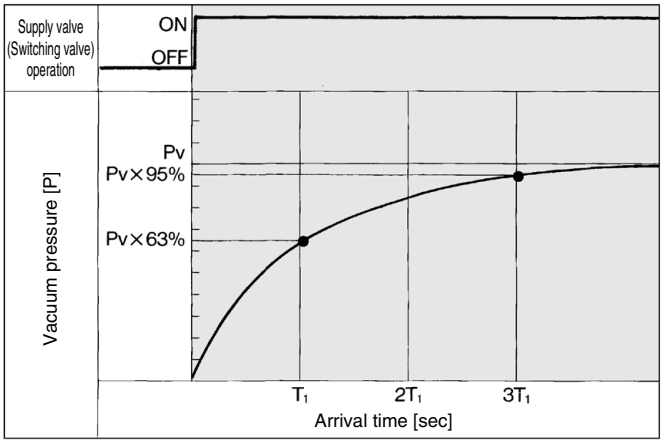

Pv: Final vacuum pressure
T1: Arrival time to 63% of final vacuum pressure **Pv**
T2: Arrival time to 95% of final vacuum pressure **Pv**

Formula for Calculating Adsorption Response Time

Adsorption response times **T1** and **T2** can be obtained through the formulas given below.

Adsorption response time $T_1 = \frac{V \times 60}{Q}$

Adsorption response time $T_2 = 3 \times T_1$

Piping capacity

$V = \frac{3.14}{4} D^2 \times L \times \frac{1}{1000}$ [L]

T1: Arrival time to 63% of final vacuum pressure **Pv** [sec]
T2: Arrival time to 95% of final vacuum pressure **Pv** [sec]
Q1: Average suction flow rate [L/min (ANR)]
Calculation of average suction flow rate
• Ejector
Q1 = (1/2 to 1/3) x Ejector max. suction flow rate [L/min (ANR)]
• Vacuum pump
Q1 = (1/2 to 1/3) x 55.5 x Conductance of switching valve [dm³/(s·bar)]
D: Piping diameter [mm]
L: Length from ejector and switching valve to pad [m]
V: Piping capacity from ejector and switching valve to pad [L]
Q2: Max. flow from ejector and switching valve to pad by piping system
Q2 = C x 55.5 L/min (ANR)
Q: Smaller one between the **Q1** and **Q2** [L/min (ANR)]
C: Conductance of piping [dm³/(s·bar)]

For the conductance, the equivalent conductance can be found in "**8 Data: Conductance by Tube I.D. (Selection Graph (3))**.

Adsorption Response Time from the Selection Graph

1. Tube Piping Capacity

The piping capacity from the ejector and the switching valve of the vacuum pump system to the pad can be found in "**8** Data: Piping Capacity by Tube I.D. (Selection Graph (2))."

2. Obtain the adsorption response times.

By operating the supply valve (switching valve) that controls the ejector (vacuum pump), the adsorption response times T_1 and T_2 that elapsed before the prescribed vacuum pressure is reached can be obtained from Selection Graph (1).

Selection Graph (1) Adsorption Response Time

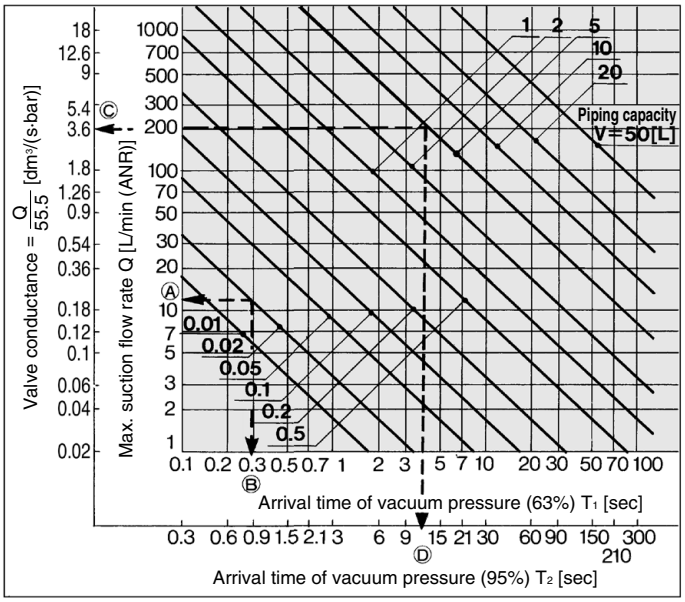

∗ Conversely, the size of the ejector or the size of the switching valve of the vacuum pump system can be obtained from the adsorption response time.

How to read the graph

Example 1: For obtaining the adsorption response time until the pressure in the piping system with a piping capacity of 0.02 L is discharged to 63% (**T_1**) of the final vacuum pressure through the use of a ZH07□S vacuum ejector with a maximum suction flow rate of 12 L/min (ANR)

<Selection Procedure>

From the point at which the vacuum ejector's maximum vacuum suction flow rate of 12 L/min (ANR) and the piping capacity of 0.02 L intersect, the adsorption response time **T_1** that elapses until 63% of the maximum vacuum pressure is reached can be obtained. (Sequence in Selection Graph (1), Ⓐ→Ⓑ) **T_1 ≈ 0.3 seconds**

Example 2: For obtaining the discharge response time until the internal pressure in the 5 L tank is discharged to 95% (**T_2**) of the final vacuum pressure through the use of a valve with a conductance of 3.6 dm³/(s·bar)

<Selection Procedure>

From the point at which the valve's conductance of 3.6 dm³/(s·bar) and the piping capacity of 5 L intersect, the discharge response time (**T_2**) that elapses until 95% of the final vacuum pressure is reached can be obtained. (Sequence in Selection Graph (1), Ⓒ→Ⓓ) **T_2 ≈ 12 seconds**

6 Precautions for Vacuum Equipment Selection and SMC's Proposals

Safety Measures

- Make sure to provide a safe design that takes into account vacuum pressure drops caused by power supply disruptions or a lack of supply air. Drop prevention measures must be taken in particular when the dropping of workpieces presents some degree of danger.

Precautions for Vacuum Equipment Selection

As a countermeasure for power outages, select a supply valve that is normally open or one that is equipped with a self-holding function.

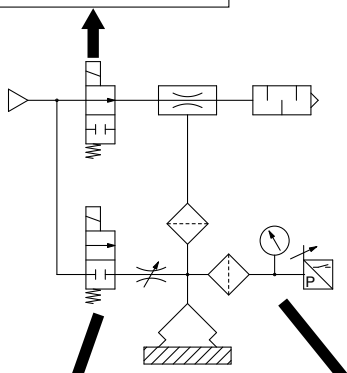

Be aware that the composite conductance consisting of the areas from the pad to the ejector of a vacuum switching valve does not decrease.

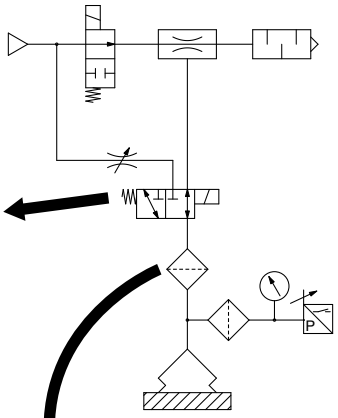

For the release valve, select a 2/3-port valve with a low-vacuum specification. Also, use a needle valve to regulate the release flow rate.

- During the adsorption and transfer of workpieces, checking of the vacuum switch values is recommended.
- In addition, visually check the vacuum gauge values when handling a heavy or a hazardous item.
- Install a filter (ZFA, ZFB, ZFC series) before the pressure switch if the ambient air is of low quality.

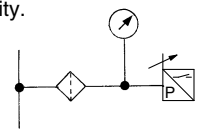

Use a suction filter (ZFA, ZFB, ZFC series) to protect the switching valve and to prevent the ejector from becoming clogged. Also, a suction filter must be used in dusty environments. If only the unit's filter is used, it will become clogged quickly.

Vacuum Ejector or Pump and Number of Vacuum Pads

Ejector and number of pads		Vacuum pump and number of pads	
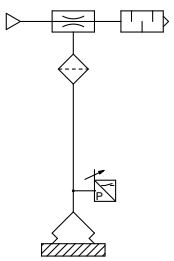	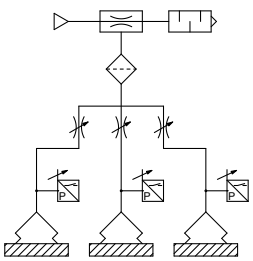	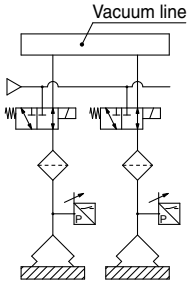	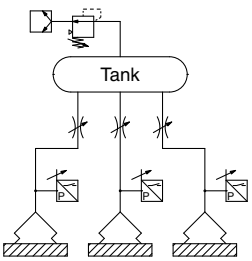
Ideally, one pad should be used for each ejector.	When more than one pad is attached to a single ejector, if one of the workpieces becomes detached, the vacuum pressure will drop, causing the other workpieces to become detached. Therefore, the countermeasures listed below must be taken. • Adjust the needle valve to minimize the pressure fluctuation between adsorption and non-adsorption operations. • Provide a vacuum switching valve to each individual pad to minimize the influence on other pads if an adsorption error occurs.	Ideally, one pad should be used for each line.	When more than one pad is attached to a single vacuum line, take the countermeasures listed below. • Adjust the needle valve to minimize the pressure fluctuation between adsorption and non-adsorption operation. • Include a tank and a vacuum pressure reduction valve (vacuum pressure regulator valve) to stabilize the source pressure. • Provide a vacuum switching valve to each individual pad to minimize the influence on other pads if an adsorption error occurs.

Vacuum Ejector Selection and Handling Precautions

Ejector Selection

There are 2 types of ejector flow rate characteristics: the high-vacuum type (S type) and the high-flow type (L type).
During selection, pay particular attention to the vacuum pressure when adsorbing workpieces that leak.

High Vacuum Type Flow Rate Characteristics/ ZH13□S

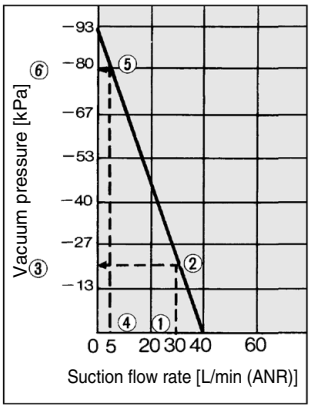

High Flow Type Flow Rate Characteristics/ ZH13□L

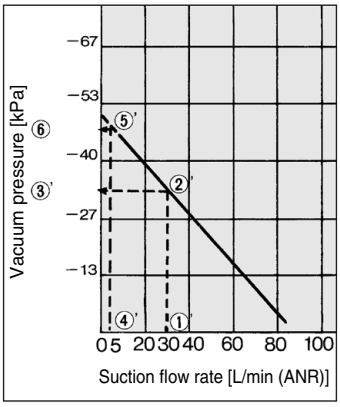

The vacuum pressure varies in accordance with the leakage volumes indicated in the above diagrams.
If the leakage volume is 30 L/min (ANR), the vacuum pressure of the S type is –20 kPa ① → ② → ③, and for the L type it is –33 kPa ①' → ②' → ③'. If the leakage volume is 5 L/min (ANR), the vacuum pressure of the S type is –80 kPa ④ → ⑤ → ⑥, and for the L type it is –47 kPa ④' → ⑤' → ⑥'. Thus, if the leakage volume is 30 L/min (ANR), the L type can attain a higher vacuum pressure, and if the leakage volume is 5 L/min (ANR), the S type can attain a higher vacuum pressure.
Thus, during the selection process, make sure to take the flow rate characteristics of the high-vacuum type (S type) and the high-flow type (L type) into consideration in order to select the type that is optimal for your application.

Ejector Nozzle Diameter Selection

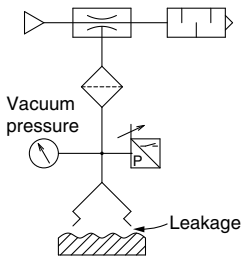

If a considerable amount of leakage occurs between the workpieces and the pads, resulting in incomplete adsorption, or to shorten the adsorption and transfer time, select an ejector nozzle with a larger diameter from the ZH, ZR, or ZL series.

Manifold Use

Individual exhaust

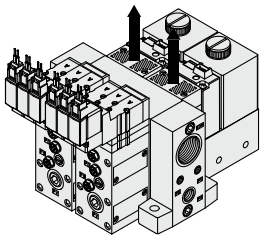

If there are a large number of ejectors that are linked on a manifold and operated simultaneously, use the built-in silencer type or the port exhaust type.

Centralized exhaust

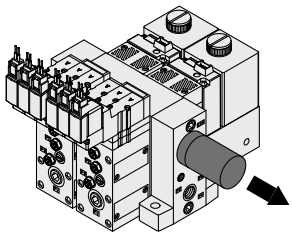

If there are a large number of ejectors that are linked on a manifold, which exhaust collectively, install a silencer at both ends. If the exhaust must be discharged outdoors through piping, make the diameter of the piping larger to control its back pressure to 5 kPa or less so that the back pressure will not affect the operation of the ejectors.

- If the vacuum ejector makes an intermittent noise (abnormal noise) from the exhaust at a certain supply pressure, the vacuum pressure may not be stable. No problems should arise from using the vacuum ejector in this state. However, if the noise is disturbing or affects the operation of the vacuum pressure switch, lower or raise the supply pressure a little at a time, and use within an air pressure range that does not produce the intermittent noise.

Supply Pressure of Vacuum Ejector

- It is recommended to use the vacuum ejector at the standard supply pressure.
  The maximum vacuum pressure and suction flow rate can be obtained when the vacuum ejector is used at the standard supply pressure, and as a result, the adsorption response time also improves. From the viewpoint of energy saving, it is most effective to use the ejector at the standard supply pressure. Since using it at an excessive supply pressure may cause the ejector performance to decline, it is recommended that it be used at the standard supply pressure.

Timing for Vacuum Generation and Suction Verification

A. Timing for Vacuum Generation

The time for opening/closing the valve will be counted if vacuum is generated after the adsorption pad descends to adsorb a workpiece. Also, there may be a delay in the generation of vacuum since the operational pattern of the verification switch, which is used for detecting the descending vacuum pad, is varied.
To solve this issue, we recommend that vacuum be generated in advance, before the vacuum pads begin to descend to the workpieces. Adopt this method after confirming that there will be no misalignment resulting from the workpieces' light weight.

B. Suction Verification

When lifting a vacuum pad after adsorbing a workpiece, confirm that there is a suction verification signal from the vacuum pressure switch before the vacuum pad is lifted. If the vacuum pad is lifted based on the timing of a timer, etc., the workpiece may be left behind.
In general adsorption transfer, the time for adsorbing a workpiece is slightly different since the position of the vacuum pad and the workpiece are different after every operation. Therefore, program a sequence in which the suction completion is verified by a vacuum pressure switch, etc., before moving to the next operation.

C. Set Pressure for the Vacuum Pressure Switch

Set the optimum value after calculating the required vacuum pressure for lifting workpieces.
If a higher pressure than required is set, there is a possibility of being unable to confirm the suction even though a workpiece is being adsorbed. This will result in a suction error.
When setting vacuum pressure switch set values, you should set using a lower pressure, with which workpieces can be adsorbed, only after considering the acceleration or vibration when the workpieces are transferred. The set value of the vacuum pressure switch shortens the time required to lift the workpieces. Since a switch detects whether a workpiece is being lifted or not, the pressure must be set high enough to detect it.

Vacuum Pressure Switch (ZSE series)
Flow Sensor (PFMV series)
Vacuum Pressure Gauge (GZ series)

When adsorbing and transferring workpieces, check the vacuum pressure switch values as much as possible. (In addition, visually check the vacuum gauge values, especially when handling a heavy or hazardous item.)

Approx. ø1 adsorption nozzle
The difference in pressure between ON and OFF is reduced depending on the capacity of the ejector and the vacuum pump.
In such cases, it is necessary to use **a ZSE10 or ZSE30A digital pressure switch with a fine smallest settable increment or a flow switch for flow rate detection**.

* • **A vacuum generator with a large suction capacity will not be detected properly**, so an ejector with an appropriate capacity must be selected.
• Since the hysteresis is small, vacuum pressure must be stabilized.



Vacuum pressure switch
ZSE10, ZSE30A



Flow sensor
PFMV



Vacuum pressure gauge
GZ46

Refer to the **Web Catalog** for details.

Timing Chart Example

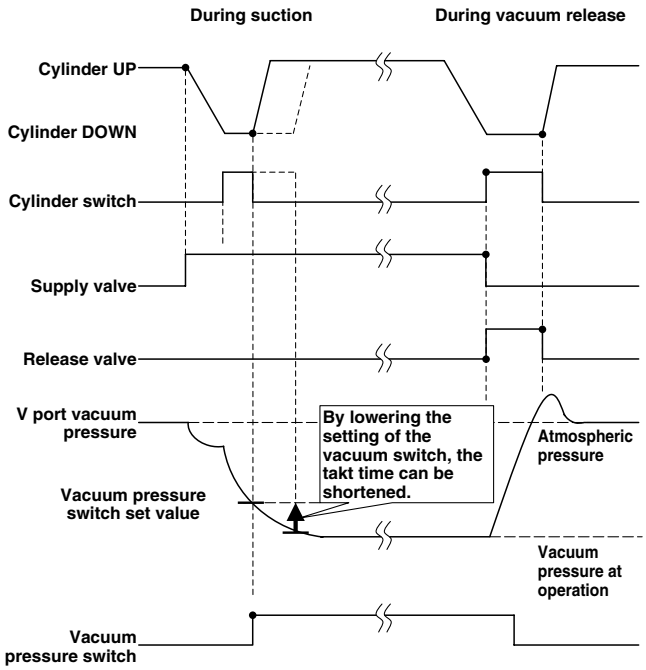

Dust and Vacuum Equipment

- When vacuum equipment is used, not only the workpieces but also the dust in the surrounding environment is taken into the equipment. Preventing the intrusion of dust is more important for vacuum equipment than it is for any other kind of pneumatic equipment. Some of SMC's vacuum equipment comes with a filter, but when there is a large amount of dust, an additional filter must be installed.
- When vaporized materials such as oil or adhesive are sucked into the equipment, they accumulate inside, which may cause problems.
- It is important to prevent dust from entering the vacuum equipment as much as possible.
  (1) Make sure to keep the working environment and the surrounding area of the workpieces clean so that dust will not be sucked into the equipment.
  (2) Check the amount and types of dust before using the equipment and install a filter, etc., in the piping when necessary.
  (3) Conduct a test and make sure that operating conditions are cleared before using the equipment.
  (4) Perform filter maintenance according to how dirty the filter becomes.
  (5) Filter clogging generates a pressure difference between the adsorption and ejector parts. This requires attention since clogging can prevent proper adsorption from being achieved.

Air Suction Filter (ZFA, ZFB, ZFC series)

- To protect the switching valve and the ejector from becoming clogged, a suction filter in the vacuum circuit is recommended.
- When using an ejector in dusty environments, the unit's filter will become clogged quickly, so it is recommended that a ZFA, ZFB, or ZFC series filter be used concurrently.

Vacuum Line Equipment Selection

Determine the volume of the suction filter and the conductance of the switching valve in accordance with the maximum suction flow rate of the ejector and the vacuum pump. Make sure that the conductance is greater than the value that has been obtained through the formula given below. (If the devices are connected in series in the vacuum line, their conductance values must be combined.)

$$C = \frac{Q_{max}}{55.5}$$

C: Conductance [dm³/(s·bar)]
Q_{max}: Max. suction flow rate [L/min (ANR)]

7 Vacuum Equipment Selection Example

Transfer of Semiconductor Chips

Selection conditions

(1) Workpiece: Semiconductor chips, Dimensions: 8 mm x 8 mm x 1 mm, Weight: 1 g
(2) Vacuum piping length: 1 m
(3) Adsorption response time: 300 ms or less

1. Vacuum Pad Selection

(1) Based on the workpiece size, the pad diameter is 4 mm (1 pc.).

(2) Using the formula on page 7, check the lifting force.

W = P x S x 0.1 x 1/t
0.0098 = P x 0.13 x 0.1 x 1/4
P = 3.0 kPa

W = 1 g = 0.0098 N
S = π/4 x $(0.4)^2$ = 0.13 cm^2
t = 4 (Horizontal lifting)

According to the calculation, –3.0 kPa or more of vacuum pressure can adsorb the workpieces.

(3) Based on the workpiece shape and type, select:
Pad form: Flat type with groove
Pad material: Silicone rubber

(4) According to the results above, select the vacuum pad part number ZP3-04UMS.

2. Vacuum Ejector Selection

(1) Find the vacuum piping capacity.
Assuming that the tube I.D. is 2 mm, the piping capacity is as follows:

$V = \pi/4 \times D^2 \times L \times 1/1000 = \pi/4 \times 2^2 \times 1 \times 1/1000$
$= 0.0031$ L

(2) Assuming that leakage (Q_L) during adsorption is 0, find the average suction flow rate to meet the adsorption response time using the formula on page 12.

$Q = (V \times 60)/T_1 + Q_L = (0.0031 \times 60)/0.3 + 0 = 0.62$ L

From the formula on page 12, the maximum suction flow rate Q_{max} is

Q_{max} = (2 to 3) x Q = (2 to 3) x 0.62
= 1.24 to 1.86 L/min (ANR)

According to the maximum suction flow rate of the vacuum ejector, a nozzle with a 0.5 diameter can be used.
If a ZX series vacuum ejector is used, the ZX105□ representative model can be selected.
(Based on the operating conditions, specify the complete part number for the vacuum ejector to be used.)

3. Adsorption Response Time Confirmation

Confirm the adsorption response time based on the characteristics of the vacuum ejector selected.

(1) The maximum suction flow rate of the ZX105□ vacuum ejector is 5 L/min (ANR).
From the formula on page 13, the average suction flow rate Q_1 is as follows:

Q_1 = (1/2 to 1/3) x Ejector max. suction flow rate
= (1/2 to 1/3) x 5 = 2.5 to 1.7 L/min (ANR)

(2) Next, find the maximum flow rate Q_2 of the piping. The conductance **C is 0.22** from Selection Graph (3).
From the formula on page 13, the maximum flow rate is as follows:

$Q_2 = C \times 55.5 = 0.22 \times 55.5 = 12.2$ L/min (ANR)

(3) Since Q_2 is smaller than Q_1, **$Q = Q_1$**.
Thus, from the formula on page 13, the adsorption response time is as follows:

$T = (V \times 60)/Q = (0.0031 \times 60)/1.7 = 0.109$ s
= 109 ms

It is possible to confirm that the calculation result satisfies the required specification of 300 ms.

8 Data

Selection Graph

Selection Graph (2) Piping Capacity by Tube I.D.

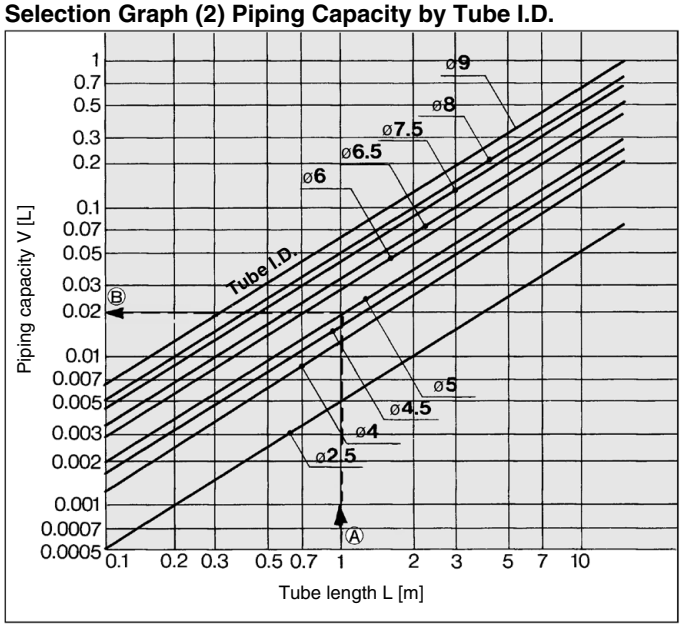

How to read the graph

Example: For obtaining the capacity of a tube with an I.D. of ø5 and a length of 1 meter

<Selection Procedure>

By extending leftward from the point at which the 1 meter tube length on the horizontal axis intersects the line for a tube with an I.D. of ø5, a piping capacity approximately equivalent to 0.02 L can be obtained on the vertical axis.

Piping capacity ≈ 0.02 L

Selection Graph (3) Conductance by Tube I.D.

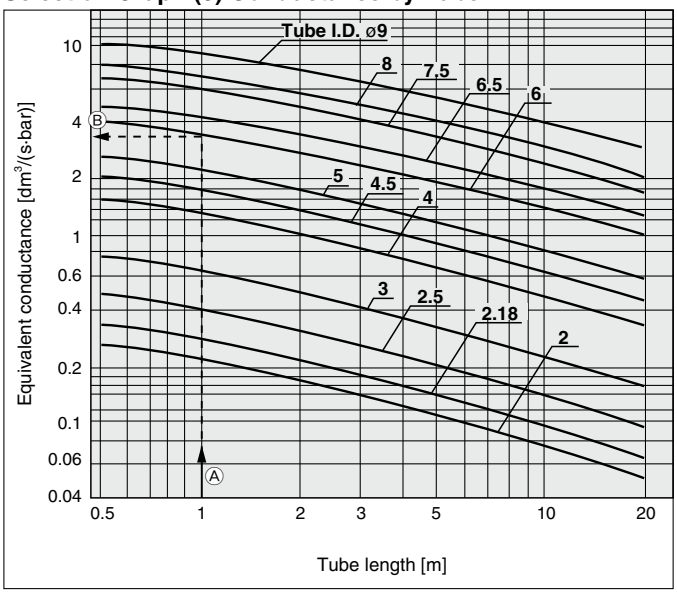

How to read the graph

Example: A ø8/ø6 sized tube with a length of 1 meter

<Selection Procedure>

By extending leftward from the point at which the 1 meter tube length on the horizontal axis intersects the line for a tube with an I.D. of ø6, an equivalent conductance of approximately 3.6 dm³/(s·bar) can be obtained on the vertical axis.

Equivalent conductance ≈ 3.6 dm³/(s·bar)

Glossary of Terms

Terms	Description
(Max.) suction flow rate	Volume of air taken in by the ejector The maximum value is the volume of air taken in without having anything connected to the vacuum port.
Maximum vacuum pressure	The maximum value of the vacuum pressure generated by the ejector
Air consumption	The compressed volume of air consumed by the ejector
Standard supply pressure	The optimal supply pressure for operating the ejector
Exhaust characteristics	The relationship between the vacuum pressure and the suction flow rate when the supply pressure to the ejector has been changed
Flow rate characteristics	The relationship between the vacuum pressure and the suction flow rate with the standard supply pressure supplied to the ejector
Vacuum pressure switch	Pressure switch for verifying the adsorption of a workpiece
(Air) supply valve	Valve for supplying compressed air to the ejector
(Vacuum) release valve	Valve for supplying positive pressure or air for breaking the vacuum state of the adsorption pad
Flow adjustment valve	Valve for adjusting the volume of air for breaking the vacuum
Pilot pressure	Pressure for operating the ejector valve
External release	The action of breaking the vacuum using externally supplied air instead of using the ejector unit
Vacuum port	Port for generating vacuum
Exhaust port	Port for exhausting air consumed by the ejector, and air taken in from the vacuum port
Supply port	Port for supplying air to the ejector
Back pressure	Pressure inside the exhaust port
Leakage	The entry of air into the vacuum passage, such as from an area between a workpiece and a pad, or between a fitting and a tube The vacuum pressure decreases when leakage occurs.
Response time	The time from the application of the rated voltage to the supply valve or release valve until the V port pressure reaches the specified pressure
Average suction flow rate	The suction flow rate by the ejector or pump for calculating the response speed It is 1/2 to 1/3 of the maximum suction flow rate.
Conductive pad	A low-electrical resistance pad for electrostatic prevention
Vacuum pressure	Any pressure below the atmospheric pressure When the atmospheric pressure is used as a reference, the pressure is represented by –kPa (G), and when the absolute pressure is used as a reference, the pressure is represented by kPa (abs). When referencing a piece of vacuum equipment such as an ejector, the pressure is generally represented by –kPa.
Ejector	A unit for generating vacuum by discharging the compressed air from a nozzle at a high speed, which is based on the phenomenon in which the pressure is reduced when the air around the nozzle is sucked in
Air suction filter	Vacuum filter provided in the vacuum passage for preventing the intrusion of dust into the ejector, vacuum pump, or peripheral equipment

Countermeasures for Vacuum Adsorption Problems (Troubleshooting)

Condition & Description of improvement	Contributing factor	Countermeasure
Initial adsorption problem (During trial operation)	The adsorption area is too small. (The lifting force is lower than the workpiece mass.)	Recheck the relationship between the workpiece mass and the lifting force. • Use vacuum pads with a larger adsorption area. • Increase the quantity of vacuum pads.
	The vacuum pressure is too low. (Leakage from adsorption surface) (Air permeable workpiece)	Eliminate (reduce) the leakage from the adsorption surface. • Reconsider the form of the vacuum pads. Check the relationship between the suction flow rate and the arrival pressure of the vacuum ejector. • Use a vacuum ejector with a high suction flow rate. • Increase the adsorption area.
	The vacuum pressure is too low. (Leakage from vacuum piping)	Repair the leakage point.
	The internal volume of the vacuum circuit is too large.	Check the relationship between the internal volume of the vacuum circuit and the suction flow rate of the vacuum ejector. • Reduce the internal volume of the vacuum circuit. • Use a vacuum ejector with a high suction flow rate.
	The pressure drop in the vacuum piping is too large.	Reconsider the vacuum piping. • Use a shorter or larger tube (of an appropriate diameter).
	Inadequate supply pressure of vacuum ejector	Measure the supply pressure in a vacuum generation state. • Use the standard supply pressure. • Reconsider the compressed air circuit (line).
	Clogging of nozzle or diffuser (Infiltration of foreign matter during piping)	Remove foreign matter.
	The supply valve (switching valve) is not being activated.	Measure the supply voltage at the solenoid valve with a tester. • Reconsider the electric circuits, wiring, and connectors. • Use within the rated voltage range.
	The workpieces become deformed during adsorption.	Since the workpieces are thin, they become deformed easily and leakage occurs. • Use pads for the adsorption of thin objects.
Slow vacuum achieving time (Shortening of response time)	The internal volume of the vacuum circuit is too large.	Check the relationship between the internal volume of the vacuum circuit and the suction flow rate of the vacuum ejector. • Reduce the internal volume of the vacuum circuit. • Use a vacuum ejector with a high suction flow rate.
	The pressure drop in the vacuum piping is too large.	Reconsider the vacuum piping. • Use a shorter or larger tube (of an appropriate diameter).
	The vacuum pressure required is too high.	Set the vacuum pressure to the minimum necessary value by optimizing the pad diameter, etc. As the vacuum power of an ejector (venturi) rises, the vacuum flow actually lowers. When an ejector is used at its highest possible vacuum value, the vacuum flow will lower. Due to this, the amount of time needed to achieve adsorption increases. One should consider an increase in the diameter of the ejector nozzle or an increase in the size of the vacuum pads utilized in order to lower the required vacuum pressure, maximize the vacuum flow, and speed up the adsorption process.
	The setting of the vacuum pressure switch is too high.	Set to a suitable setting pressure.
Fluctuation in vacuum pressure	Fluctuation in supply pressure	Reconsider the compressed air circuit (line). (Addition of a tank, etc.)
	The vacuum pressure fluctuates under certain conditions due to the ejector characteristics.	Lower or raise the supply pressure a little at a time, and use within a supply pressure range where the vacuum pressure does not fluctuate.
Occurrence of abnormal noise (intermittent noise) from exhaust of vacuum ejector	An intermittent noise occurs under certain conditions due to the ejector characteristics.	Lower or raise the supply pressure a little at a time, and use within a supply pressure range where the intermittent noise does not occur.
Air leakage from vacuum port of manifold type vacuum ejector	Exhaust air from the ejector enters the vacuum port of another ejector that is stopped.	Use a vacuum ejector with a check valve. (Please contact SMC for the part number of an ejector with a check valve.)

Countermeasures for Vacuum Adsorption Problems (Troubleshooting)

Condition & Description of improvement	Contributing factor	Countermeasure
Adsorption problem over time (Adsorption is normal during trial operation.)	Clogging of suction filter	Replace the filters. Improve the installation environment.
	Clogging of sound absorbing material	Replace the sound absorbing materials. Add a filter to the supply (compressed) air circuit. Install an additional suction filter.
	Clogging of nozzle or diffuser	Remove foreign matter. Add a filter to the supply (compressed) air circuit. Install an additional suction filter.
	Vacuum pad (rubber) deterioration, cracking, etc.	Replace the vacuum pads. Check the compatibility between the vacuum pad material and the workpieces.
Workpieces are not released.	Inadequate release flow rate	Open the release flow adjustment needle.
	The vacuum pressure is too high. Excessive force (adhesiveness of the rubber + vacuum pressure) is applied to the pads (rubber part).	Reduce the vacuum pressure. If inadequate lifting force causes a problem in transferring the workpieces, increase the number of pads.
	Effects due to static electricity	Use conductive pads.
	The adhesiveness of the rubber increases due to the operating environment or wearing of the pad. • The adhesiveness of the rubber material is too high. • The adhesiveness increases due to the wearing of the vacuum pads (rubber).	Replace the pads. Reconsider the pad material and check the compatibility between the pad material and the workpieces. Reconsider the pad form. (Change to rib, groove, blast options) Reconsider the pad diameter and quantity of pads.

Examples of Non-conformance

Phenomenon	Possible causes	Countermeasure
No problem occurs during the test, but adsorption becomes unstable after starting operation.	• The setting of the vacuum switch is not appropriate. The supply pressure is unstable. The vacuum pressure does not reach the set pressure. • There is leakage between the workpieces and the vacuum pads.	1) Set the pressure for the vacuum equipment (supply pressure, if using an ejector) to the necessary vacuum pressure during the adsorption of the workpieces. And set the set pressure for the vacuum switch to the necessary vacuum pressure for adsorption. 2) It is presumed that there was leakage during the test, but it was not serious enough to prevent adsorption. Reconsider the vacuum ejector and the form, diameter, and material of the vacuum pads. Reconsider the vacuum pads.
Adsorption becomes unstable after replacing the pads.	• The initial setting conditions (vacuum pressure, vacuum switch setting, height of the pads) have changed. The settings have changed because the pads were worn out due to the operating environment. • When the pads were replaced, leakage was generated from the screw connection part or the engagement between the pad and the adapter.	1) Reconsider the operating conditions including vacuum pressure, the set pressure of the vacuum switch, and the height of the pads. 2) Reconsider the engagement.
Identical pads are used to adsorb identical workpieces, but some of the pads cannot adsorb the workpieces.	• There is leakage between the workpieces and the vacuum pads. • The supply circuit for the cylinder, the solenoid valve, and the ejector are in the same pneumatic circuit system. The supply pressure decreases when they are used simultaneously. (Vacuum pressure does not increase.) • There is leakage from the screw connection part or the engagement between the pad and the adapter.	1) Reconsider the pad diameter, form, material, vacuum ejector (suction flow rate), etc. 2) Reconsider the pneumatic circuit. 3) Reconsider the engagement.
The bellows of the bellows pad sticks and/or there are recovery delays. (This may occur at an early stage.)	When the vacuum pad (bellows type) reaches the end of its life, the weakening of bent parts or the wear or sticking of rubber parts may occur.	The operating conditions will determine the product life. Inspect it sufficiently and determine the replacement period. • Replace the pads. • Reconsider the diameter, form, and material of the vacuum pads. • Reconsider the quantity of the vacuum pads.
	The vacuum pressure is higher than necessary, so excessive force (adhesiveness of the rubber + vacuum pressure) is applied to the pads (rubber part).	Reduce the vacuum pressure. If an inadequate lifting force causes a problem in transferring the workpieces due to the reduction of vacuum pressure, increase the number of pads.
	A load is applied to the bellows due to the following operations, leading to the sticking of rubber parts or a reduction of the pad recovery performance. • Pushing exceeding pad displacement (operating range), external load • Workpiece holding/waiting Waiting 10 seconds or more while a workpiece is being held * Even when under 10 seconds, the sticking of pads or recovery delay issues may occur earlier depending on the operating environment and operating method. Longer workpiece holding times lead to longer recovery times and a shorter life.	Reduce the load applied to the pads. • Review the equipment so that an external load exceeding the pad displacement (operating range) is not applied. • Avoid workpiece holding and waiting. The operating conditions will determine the product life. Inspect it and determine the replacement period.
The product life has been shortened after the replacement of the product (pad, buffer, etc.).	• The settings of the product changed. • A tube is being pulled. Unbalanced load in the clockwise direction. • The transfer speed increased. • The workpiece to be transferred was changed. (Shape, center of gravity, weight, etc.) • The mounting orientation was at an angle. • The operating environment changed. • The buffer (mounting nut) was not tightened with the appropriate torque.	If the problem (inability to adsorb) does not occur when starting the operation, the product may reach the end of its life due to the customer's specification conditions. Reconsider the piping and operation (specifications). The selected model may not be appropriate for the current workpieces to be transferred or for the specifications. Select a different product model by reconsidering the pad form, diameter, quantity, and suction balance.

Examples of Non-conformance

Phenomenon	Possible causes	Countermeasure
The pads come out from the adapter during operation. **Cracks are generated on the pads.**	A load is applied to the pads (rubber part) due to the following factors. • Inadequate lifting force • Incorrect suction balance • Loads due to transfer acceleration were not considered when selecting the product model.	The selected model may not be appropriate for the current workpieces to be transferred or for the specifications. Select a different product model by reconsidering the pad form, diameter, quantity, and suction balance.
Cracks are generated on the rubber (NBR, conductive NBR). 	• The product is operated in an ozone environment. • An ionizer is used. ∗ This phenomenon occurs earlier if pushing or high vacuum pressure is used.	Reconsider the operating environment. Reconsider the materials to be used.
Even when a mark-free pad is used, the pad end wears out quickly. (Suction marks are generated.)	If the pad adsorbs an extremely clean workpiece, slippage is minimized, and a load (impact) is applied to the pad end.	Use the following products. • Fluororesin-coated pad • Clean attachment
Even when a mark-free pad is used, suction marks are generated.	• Incorrect application (The mark was generated due to a deformation.) • Contamination (insufficient cleaning) was left on the pad when installing the equipment, dust was present in the operating environment, etc.	Check the marks generated on the workpieces. 1) Marks due to deformed (lined) workpieces Reconsider the pad diameter, form, material, vacuum ejector (suction flow rate), etc. 2) Marks due to worn rubber Reconsider the pad diameter, form, material, vacuum ejector (suction flow rate), etc. 3) Marks generated by moving components If the suction marks disappear or become smaller after wiping with a cloth or waste cloth (without using solutions), clean the pads as they may have been contaminated. Refer to “Cleaning method (Mark-free NBR pad)” in this catalog.
Sometimes the buffer operation is not smooth, or the buffer does not slide.	The tightening torque of the nut for mounting the buffer is outside of the specified range.	Tighten the nut to the recommended tightening torque. Refer to the Specific Product Precautions on pages 165, 198, 246, and 343.
	Particles are stuck to the sliding surface, or it is scratched.	Reconsider the ambient environment.
	A lateral load was applied to the piston rod, causing eccentric wearing.	Review whether a radial load was applied due to piping, etc.

Vacuum Pad Replacement Period

- Vacuum pads are disposable. Replace them on a regular basis.

  Continued use of vacuum pads will cause wear and tear on the adsorption surface, and the exterior dimensions will gradually get smaller and smaller. As the pads' diameter gets smaller, their lifting force will decrease, though adsorption will still remain possible.

  It is extremely difficult to provide advice on the frequency of vacuum pad replacement. This is because there are numerous factors at work, including surface roughness, operating environment (temperature, humidity, ozone, solvents, etc.), and operating conditions (vacuum pressure, workpiece weight, pressing force of the vacuum pads on the workpieces, presence or absence of a buffer, etc.).

  (The weakening of bent parts or the wear or sticking of rubber parts may occur with the bellows type pad.)

  Thus, the customer should decide when vacuum pads should be replaced, based on their condition at the time of initial use.

  The bolts may become loose depending on the operating conditions and environment. Be sure to perform regular maintenance.

Basic Pad *ZP* Series

RoHS

ø2, ø4, ø6, ø8, ø10, ø13, ø16, ø20, ø25, ø32, ø40, ø50

Flat Type, Flat Type with Ribs, Bellows Type, Thin Flat Type, Thin Flat Type with Ribs, Deep Type

12 sizes, 6 types of pad forms, and a wide range of adapter variations

Pad form	Application
Flat type	For workpieces with flat and undeformed surfaces
Flat type with ribs	For workpieces which are easily deformed Workpieces can be removed easily thanks to the ribs.
Bellows type	For use where there is no space for a buffer or for workpieces with inclined surfaces
Thin flat type	For soft workpieces such as thin sheets or vinyl Wrinkling or deformation during adsorption can be reduced.
Thin flat type with ribs	For soft workpieces such as thin sheets or vinyl Workpieces can be removed easily thanks to the ribs.
Deep type	For workpieces with curved surfaces or for spherical workpieces

Mounting bracket	Application
Ball joint	For workpieces with inclined or curved surfaces
With adapter	The adapter can be selected according to the installation conditions.
With buffer	For workpieces of varying heights The buffer can reduce the impact to the workpiece during adsorption.



CONTENTS

Basic Pad *ZP* Series

Variations ..... p. 27
Specifications ..... p. 29

Flat Type
· How to Order ..... p. 31
· Dimensions/Models ..... p. 32

Flat Type with Ribs
· How to Order ..... p. 50
· Dimensions/Models ..... p. 51

Flat, Ball Joint Type
· How to Order ..... p. 61
· Dimensions/Models ..... p. 62

Bellows Type
· How to Order ..... p. 67
· Dimensions/Models ..... p. 68

Thin Flat Type
· How to Order ..... p. 86
· Dimensions/Models ..... p. 87

Thin Flat Type with Ribs
· How to Order ..... p. 95
· Dimensions/Models ..... p. 96

Deep Type
· How to Order ..... p. 104
· Dimensions/Models ..... p. 105

Construction ..... p. 115
(Flat type/Flat type with ribs/Bellows type/Thin flat type/Thin flat type with ribs/Deep type)
Construction ..... p. 119
(Flat, Ball joint type)
Mounting Bracket Assembly ..... p. 121
(Flat type/Flat type with ribs/Bellows type/Thin flat type/Thin flat type with ribs/Deep type)
Mounting Bracket Assembly ..... p. 127
(Flat, Ball joint type)

Specific Product Precautions ..... p. 165

Variations

Vacuum inlet direction			Flat type	Flat type with ribs	Bellows type	Thin flat type	Thin flat type with ribs	Deep type
Vacuum inlet direction	Single unit	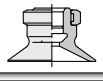	p. 32	p. 51	p. 68	p. 87	p. 96	p. 105
Vertical	ZPT With adapter	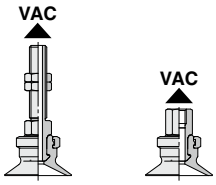	p. 33 p. 34	p. 51 p. 52	p. 69 p. 70	p. 87	p. 96	p. 105 p. 106
Lateral	ZPR With adapter	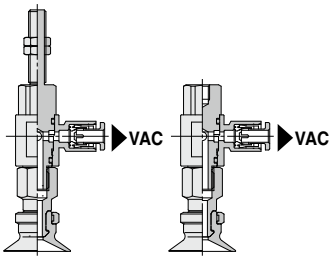	p. 35 p. 37	p. 53 p. 54	p. 71 p. 73	p. 88 p. 89	p. 97 p. 98	p. 107 p. 108
	ZPY With adapter	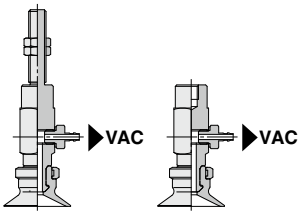	p. 39 p. 41	p. 55 p. 56	p. 75 p. 77	p. 90 p. 91	p. 99 p. 100	p. 109 p. 110
Vertical	ZPT With buffer	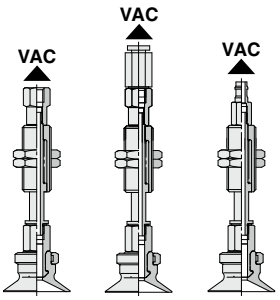	p. 43	p. 57	p. 79	p. 92	p. 101	p. 111
Lateral	ZPR With buffer	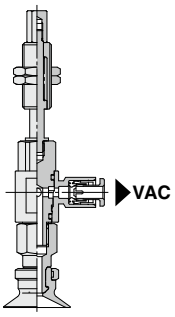	p. 46	p. 59	p. 82	p. 93	p. 102	p. 113
	ZPY With buffer	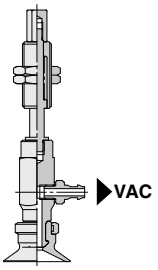	p. 48	p. 60	p. 84	p. 94	p. 103	p. 114

Ball Joint Type

Vacuum inlet direction		Vacuum inlet direction	Flat type
	Single unit	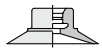	p. 62
Vertical	ZPT With adapter	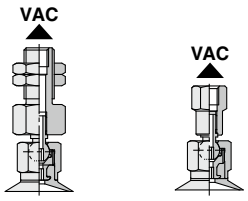	p. 62 p. 63
Lateral	ZPR With adapter	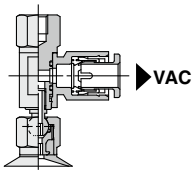	p. 64
Vertical	ZPT With buffer	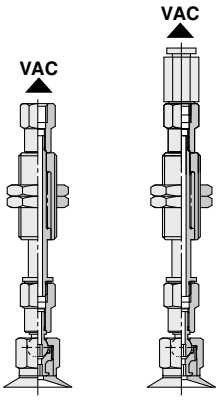	p. 65
Lateral	ZPR With buffer	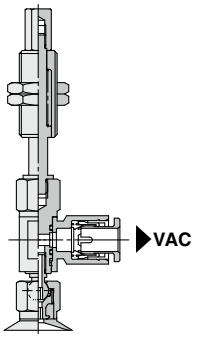	p. 66

Basic Pad *ZP Series*
Specifications

Pad Material

Material	NBR (Nitrile rubber)	Silicone rubber*1	Urethane rubber	FKM (Fluoro rubber)	Conductive NBR (Nitrile rubber)	Conductive silicone rubber
Color of rubber	Black	White	Brown	Black		
Rubber hardness HS (±5°)	A50/S	A40/S	A60/S		A50/S	
Identification (Dot)	—	—	—	· 1 green dot	· 1 silver dot	· 2 silver dots

*1 Compliant with the FDA (USA Food and Drug Administration) regulation 21CFR§177.2600 for "Rubber articles intended for repeated use"

Adapter Specifications

Vertical



Vacuum Inlet Direction Vertical T Type/ZPT

Connection	Male thread		Female thread			
Pad diameter	ø2 to ø16	ø20 to ø50	ø2 to ø8*1	ø10 to ø16	ø20 to ø32	ø40, ø50
Connection thread	M5 x 0.8 M6 x 1	M6 x 1 M8 x 1	M4 x 0.7 M5 x 0.8	M5 x 0.8 M6 x 1 1/8 (Rc, NPT, NPTF)	M5 x 0.8 M6 x 1 M8 x 1.25 1/8 (Rc, NPT, NPTF)	M6 x 1 M8 x 1.25 1/8 (Rc, NPT, NPTF)
Vacuum inlet	Use the connection thread.					

*1 Refer to ø2 to ø8 for the thin flat type and thin flat type with ribs.

Lateral



Vacuum Inlet Direction Lateral R Type/ZPR

Connection		Male thread			Female thread			
Pad diameter		ø2 to ø16	ø20 to ø32	ø40, ø50	ø2 to ø8*1	ø10 to ø16	ø20 to ø32	ø40, ø50
Connection thread		M5 x 0.8 M6 x 1	M6 x 1 M8 x 1		M4 x 0.7 M5 x 0.8	M5 x 0.8 M6 x 1	M5 x 0.8 M6 x 1 M8 x 1.25	M6 x 1 M8 x 1.25
Vacuum inlet	One-touch fitting	ø4, ø6	ø4, ø6, ø8	ø6, ø8	ø4, ø6		ø4, ø6, ø8	ø6, ø8

*1 Refer to ø2 to ø8 for the thin flat type and thin flat type with ribs.



Vacuum Inlet Direction Lateral Y Type/ZPY

Connection		Male thread			Female thread			
Pad diameter		ø2 to ø16	ø20 to ø32	ø40, ø50	ø2 to ø8*1	ø10 to ø16	ø20 to ø32	ø40, ø50
Connection thread		M5 x 0.8 M6 x 1	M6 x 1 M8 x 1		M4 x 0.7 M5 x 0.8	M5 x 0.8 M6 x 1	M5 x 0.8 M6 x 1 M8 x 1.25	M6 x 1 M8 x 1.25
Vacuum inlet	Barb fitting*2	ø4, ø6		ø6	ø4, ø6			ø6

*1 Refer to ø2 to ø8 for the thin flat type and thin flat type with ribs.
*2 Applicable tubing: Nylon tubing, Soft tubing

Buffer Specifications

Vertical
Lateral

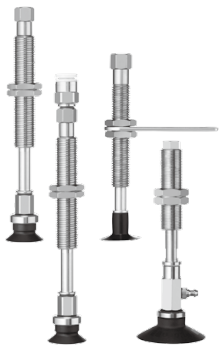

Pad diameter		ø2 to ø8*1	ø10 to ø32	ø40, ø50
Non-rotating specification		J: Rotating, K: Non-rotating		
Stroke [mm]		6, 10, 15, 25	10, 20, 30, 40, 50	10, 20, 30, 50
Connection thread		M8 x 1	M10 x 1	M14 x 1
Spring reactive force [N]	At 0 stroke	0.8	1.0	2.0
	At full stroke	1.2	3.0	5.0

*1 Refer to ø2 to ø8 for the thin flat type and thin flat type with ribs.

Specifications

Adapter Specifications (Ball Joint Type)

Ball joint rotating angle	30°

Vacuum Inlet Direction Vertical T Type/ZPT□F

Vertical

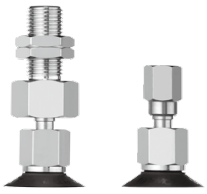

Connection	Male thread			Female thread		
Pad diameter	ø10 to ø16	ø20 to ø32	ø40, ø50	ø10 to ø16	ø20 to ø32	ø40, ø50
Connection thread	M8 x 1	M10 x 1	M14 x 1	M5 x 0.8	M5 x 0.8 M8 x 1.25 1/8 (Rc, NPT, NPTF)	M8 x 1.25 1/8 (Rc, NPT, NPTF)
Vacuum inlet	M5 x 0.8			Use the connection thread.		

Vacuum Inlet Direction Lateral R Type/ZPR□F

Lateral



Connection		Female thread		
Pad diameter		ø10 to ø16	ø20 to ø32	ø40, ø50
Connection thread		M5 x 0.8	M5 x 0.8 M8 x 1.25	M5 x 0.8 M8 x 1.25
Vacuum inlet	One-touch fitting	ø4, ø6	ø6, ø8	ø6, ø8

Buffer Specifications (Ball Joint Type)

Vertical Lateral

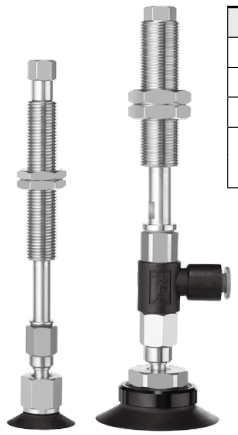

Pad diameter		ø10 to ø16	ø20 to ø50
Non-rotating specification		J: Rotating, K: Non-rotating	
Stroke [mm]		10, 20, 30, 40, 50	10, 20, 30, 50
Connection thread		M10 x 1	M14 x 1
Spring reactive force [N]	At 0 stroke	1.0	2.0
	At full stroke	3.0	5.0

Basic Pad
Flat Type
ZP Series



How to Order

		Dimensions/ Models	Construction	Mounting Bracket Assembly
Pad unit	ZP 02 U N – ☐	p. 32	p. 115 p. 117	From p. 121
With adapter	ZP T 02 U N – A5 – ☐	From p. 33	p. 115 p. 117	From p. 121
With buffer	ZP T 02 U N J 6 – B3 – A8	From p. 43	p. 116 p. 118	From p. 124

∗ Pad unit's sales unit: 10 pcs.

❶ Flat type

❶ Vacuum inlet direction

Nil	Pad unit
T	Vertical
R	Lateral (With One-touch fitting)
Y	Lateral (With barb fitting)

❷ Pad diameter

02	ø2	**16**	ø16
04	ø4	**20**	ø20
06	ø6	**25**	ø25
08	ø8	**32**	ø32
10	ø10	**40**	ø40
13	ø13	**50**	ø50

❸ Material

N	NBR
S	Silicone rubber∗1
U	Urethane rubber
F	FKM
GN	Conductive NBR
GS	Conductive silicone rubber

❹ Buffer specification

J	Rotating
K	Non-rotating

❺ Buffer stroke

Stroke [mm]	Pad diameter [mm]											
	ø2	ø4	ø6	ø8	ø10	ø13	ø16	ø20	ø25	ø32	ø40	ø50
6	●	●	●	●	—	—	—	—	—	—	—	—
10	●	●	●	●	●	●	●	●	●	●	●	●
15	●	●	●	●	—	—	—	—	—	—	—	—
20	—	—	—	—	●	●	●	●	●	●	●	●
25	●	●	●	●	—	—	—	—	—	—	—	—
30	—	—	—	—	●	●	●	●	●	●	●	●
40	—	—	—	—	●	●	●	●	●	●	—	—
50	—	—	—	—	●	●	●	●	●	●	●	●

∗1 Compliant with the FDA (USA Food and Drug Administration) regulation 21CFR§177.2600 for "Rubber articles intended for repeated use"

With adapter

❻ Vacuum inlet

○: ZPT/Vertical ●: ZPR/Lateral (With One-touch fitting) △: ZPY/Lateral (With barb fitting)

Type	Symbol	Size	Pad diameter [mm]			
			ø2 to ø8	ø10 to ø16	ø20 to ø32	ø40, ø50
Male thread	**A5**	M5 x 0.8	○	○	—	—
	A6	M6 x 1	○	○	○	○
	A8	M8 x 1	—	—	○	○
Female thread	**B4**	M4 x 0.7	○	—	—	—
	B5	M5 x 0.8	○	○	○	—
	B6	M6 x 1	—	○	○	○
	B8	M8 x 1.25	—	—	○	○
	B01	Rc1/8	—	○	○	○
	N01	NPT1/8	—	○	○	○
	T01	NPTF1/8	—	○	○	○
One-touch fitting	**04**	ø4	●	●	●	—
	06	ø6	●	●	●	●
	08	ø8	—	—	●	●
Barb fitting	**N4**	For ø4 nylon tubing	△	△	△	—
	N6	For ø6 nylon tubing	△	△	△	△
	U4	For ø4 soft tubing	△	△	△	—
	U6	For ø6 soft tubing	△	△	△	△

❼ Connection thread

●: ZPR/Lateral (With One-touch fitting) △: ZPY/Lateral (With barb fitting)

Type	Symbol	Size	Pad diameter [mm]			
			ø2 to ø8	ø10 to ø16	ø20 to ø32	ø40, ø50
Male thread	**A5**	M5 x 0.8	●△	●△	—	—
	A6	M6 x 1	●△	●△	●△	●△
	A8	M8 x 1	—	—	●△	●△
Female thread	**B4**	M4 x 0.7	●△	—	—	—
	B5	M5 x 0.8	●△	●△	●△	—
	B6	M6 x 1	—	●△	●△	●△
	B8	M8 x 1.25	—	—	●△	●△

It is not necessary to select a connection thread for ○: ZPT/Vertical. Use the vacuum inlet.

With buffer

❻ Vacuum inlet

○: ZPT/Vertical ●: ZPR/Lateral (With One-touch fitting) △: ZPY/Lateral (With barb fitting)

Type	Symbol	Size	Pad diameter [mm]			
			ø2 to ø8	ø10 to ø16	ø20 to ø32	ø40, ø50
Female thread	**B3**	M3 x 0.5	○	—	—	—
	B5	M5 x 0.8	○	○	○	○
	B01	Rc1/8	—	—	—	○
	N01	NPT1/8	—	—	—	○
	T01	NPTF1/8	—	—	—	○
One-touch fitting	**04**	ø4	○●	○●	○●	—
	06	ø6	○●	○●	○●	○●
	08	ø8	—	—	●	○●
Barb fitting	**N4**	For ø4 nylon tubing∗1	○△	△	△	—
	N6	For ø6 nylon tubing∗1	△	○△	○△	○△
	U4	For ø4 soft tubing∗2	○△	△	△	—
	U6	For ø6 soft tubing∗2	△	○△	○△	○△

∗1 Nylon tube piping ∗2 Soft nylon/Polyurethane tube piping

❼ Connection thread

○: ZPT/Vertical ●: ZPR/Lateral (With One-touch fitting) △: ZPY/Lateral (With barb fitting)

Type	Symbol	Size	Pad diameter [mm]			
			ø2 to ø8	ø10 to ø16	ø20 to ø32	ø40, ø50
Male thread	**A8**	M8 x 1	○●△	—	—	—
	A10	M10 x 1	—	○●△	○●△	—
	A14	M14 x 1	—	—	—	○●△

❽ Lock ring

Symbol	Pad diameter [mm]	
	ø2 to ø8	ø10 to ø50
Nil	None∗1	With lock ring
X19		Without lock ring

Lock ring unit

Part no.	Pad diameter [mm]
ZPL1	ø10 to ø16
ZPL2	ø20 to ø32
ZPL3	ø40, ø50

∗1 The lock ring cannot be used for pad diameters ø2 to ø8.

∗ The pad, lock ring, mounting nut, fitting, and buffer plate are shipped together but do not come assembled.

Dimensions/Models

Single unit ø2 to ø8

ZP 02 U N
❶ ❷

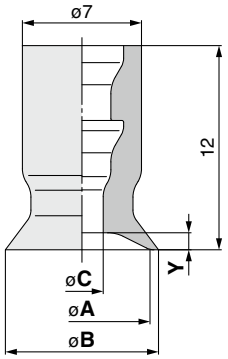

Construction	p. 115
Mounting Bracket Assembly	From p. 121

Model ❶ Pad dia.	Form	❷ *1 Material	A	B	C	Y
ZP 02	U	N S U F GN GS	2	2.6	1.2	0.5
ZP 04	U	N S U F GN GS	4	4.8	1.6	0.8
ZP 06	U	N S U F GN GS	6	7	2.5	0.8
ZP 08	U	N S U F GN GS	8	9	2.5	1

*1 N: NBR, S: Silicone rubber, U: Urethane rubber, F: FKM, GN: Conductive NBR, GS: Conductive silicone rubber

Single unit ø10 to ø50

ZP 10 U N
❶ ❷

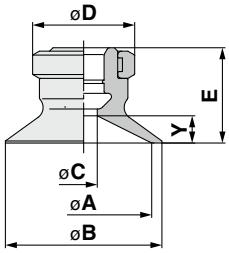

Construction	p. 117
Mounting Bracket Assembly	From p. 121

Model ❶ Pad dia.	Form	❷ *1 Material	A	B	C	D	E	Y
ZP 10	U	N S U F GN GS	10	12	4	13	12	3
ZP 13	U	N S U F GN GS	13	15	4	13	12	3
ZP 16	U	N S U F GN GS	16	18	4	13	12.5	3.5
ZP 20	U	N S U F GN GS	20	23	4	15	14	4
ZP 25	U	N S U F GN GS	25	28	4	15	14	4
ZP 32	U	N S U F GN GS	32	35	4	15	14.5	4.5
ZP 40	U	N S U F GN GS	40	43	7	18	18.5	6.5
ZP 50	U	N S U F GN GS	50	53	7	18	19.5	7.5

*1 N: NBR, S: Silicone rubber, U: Urethane rubber, F: FKM, GN: Conductive NBR, GS: Conductive silicone rubber

Dimensions/Models

With adapter ø2 to ø8

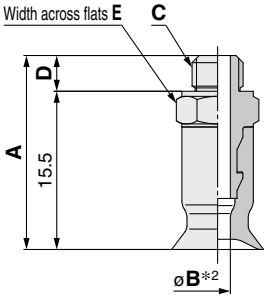

Construction	p. 115
Adapter Assembly	p. 121

ZPT 02 U N - A5
❶ ❷ ❸

❸ **Vacuum inlet (Male thread)**

A5	M5 x 0.8
A6	M6 x 1

Model						A	B*2	C	D	E
	Vacuum inlet direction	❶ Pad dia.	Form	❷ *1 Material	❸ Vacuum inlet					
ZP	T	02	U	N S U F GN GS	A5	19	1.2	M5 x 0.8	3.5	7
		04					1.6			
		06 08					2.5			
		02			A6	20	1.2	M6 x 1	4.5	8
		04					1.6			
		06 08					2.5			

*1 N: NBR, S: Silicone rubber, U: Urethane rubber, F: FKM, GN: Conductive NBR, GS: Conductive silicone rubber
*2 Indicates the minimum hole size of the adapter or vacuum pad

With adapter ø10 to ø50

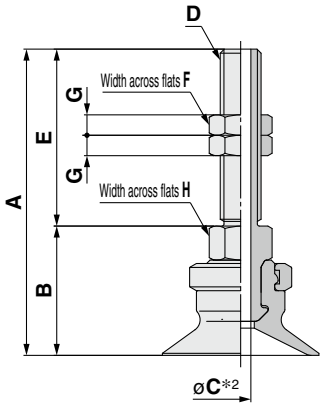

Construction	p. 117
Adapter Assembly	p. 121

ZPT 10 U N - A5
❶ ❷ ❸

❸ **Vacuum inlet (Male thread)**

A5	M5 x 0.8
A6	M6 x 1
A8	M8 x 1

Model						A	B	C*2	D	E	F	G	H
	Vacuum inlet direction	❶ Pad dia.	Form	❷ *1 Material	❸ Vacuum inlet								
ZP	T	10 13	U	N S U F GN GS	A5	38	17	2.5	M5 x 0.8	21	8	4	8
		16				38.5	17.5						
		10 13			A6	43	17	2.5	M6 x 1	26	8	3	8
		16				43.5	17.5						
		20 25				45	19	3					12
		32				45.5	19.5						
		40				50.5	24.5						
		50				51.5	25.5						
		20 25			A8	40	24	3.5	M8 x 1	16	12	3	12
		32				40.5	24.5	4.5					
		40											
		50				41.5	25.5						

*1 N: NBR, S: Silicone rubber, U: Urethane rubber, F: FKM, GN: Conductive NBR, GS: Conductive silicone rubber
*2 Indicates the minimum hole size of the adapter or vacuum pad

Recommended Gasket Part Nos.

Part no.	D vacuum inlet (Male thread)
WCS5X0.8	M5 x 0.8
WCS6X1	M6 x 1
WCS8X1	M8 x 1

Dimensions/Models

With adapter ø2 to ø8

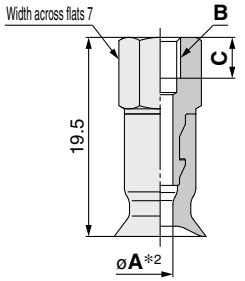

Construction	p. 115
Adapter Assembly	p. 121

ZPT 02 U N - B4
❶ ❷ ❸

❸ **Vacuum inlet (Female thread)**

B4	M4 x 0.7
B5	M5 x 0.8

Model						A*2	B	C
	Vacuum inlet direction	❶ Pad dia.	Form	❷ *1 Material	❸ Vacuum inlet			
ZP	T	02	U	N S U F GN GS	B4	1.2	M4 x 0.7	4
		04				1.6		
		06 08				2.5		
		02			B5	1.2	M5 x 0.8	5
		04				1.6		
		06 08				2.5		

*1 N: NBR, S: Silicone rubber, U: Urethane rubber, F: FKM, GN: Conductive NBR, GS: Conductive silicone rubber
*2 Indicates the minimum hole size of the adapter or vacuum pad

With adapter ø10 to ø50

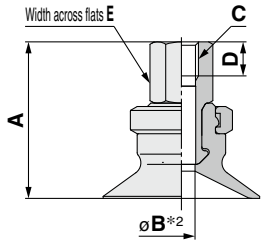

Construction	p. 117
Adapter Assembly	p. 121

ZPT 10 U N - B5
❶ ❷ ❸

❸ **Vacuum inlet (Female thread)**

B5	M5 x 0.8
B6	M6 x 1
B8	M8 x 1.25
B01	Rc1/8
N01	NPT1/8
T01	NPTF1/8

Model						A	B*2	C	D	E
	Vacuum inlet direction	❶ Pad dia.	Form	❷ *1 Material	❸ Vacuum inlet					
ZP	T	10 13	U	N S U F GN GS	B5	21	2.5	M5 x 0.8	5	8
		16				21.5				
		20 25				23	4			
		32				23.5				
		10 13			B6	21	2.5	M6 x 1	6	8
		16				21.5				
		20 25				23	4			
		32				23.5				
		40				32	4.9			12
		50				33				
		20 25			B8	29	3.5	M8 x 1.25	8	12
		32				29.5				
		40				32	6.6			
		50				33				
		10 13			B01 N01 T01	27	2.5	Rc1/8 NPT1/8 NPTF1/8	—	12
		16				27.5				
		20 25				29	3.5			
		32				29.5				
		40				32	7			
		50				33				

*1 N: NBR, S: Silicone rubber, U: Urethane rubber, F: FKM, GN: Conductive NBR, GS: Conductive silicone rubber
*2 Indicates the minimum hole size of the adapter or vacuum pad

Dimensions/Models

With adapter/One-touch fitting ø2 to ø8

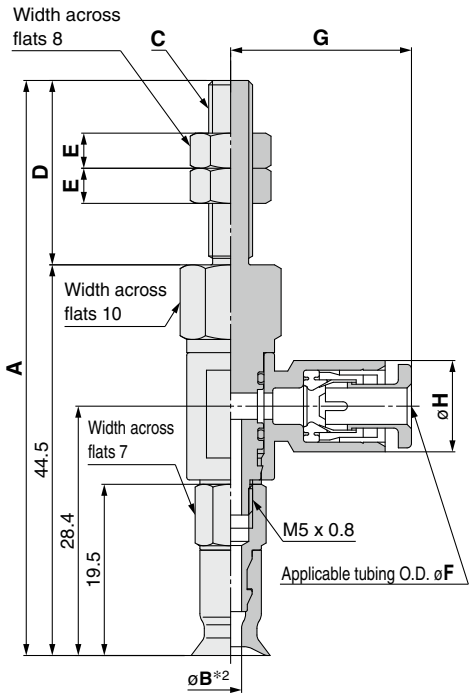

Construction	p. 115
Adapter Assembly	p. 122

ZPR 02 U N – 04 – A5

❶ ❷ ❸ ❹

❸ **Vacuum inlet (One-touch fitting)**

04	ø4
06	ø6

❹ **Connection thread (Male thread)**

A5	M5 x 0.8
A6	M6 x 1

Model							A	B*2	C	D	E
	Vacuum inlet direction	❶ Pad dia.	Form	❷ Material*1	❸ Vacuum inlet	❹ Connection thread					
ZP	R	02	U	N S U F GN GS	04 06	A5	65.5	1.2	M5 x 0.8	21	4
		04						1.6			
		06 08						2.5			
		02				A6	70.5	1.2	M6 x 1	26	3
		04						1.6			
		06 08						2.5			

Dimensions Per Vacuum Inlet

Model							F	G	H	Fitting part min. hole size
	Vacuum inlet direction	❶ Pad dia.	Form	❷ Material*1	❸ Vacuum inlet	❹ Connection thread				
ZP	R	02 04 06 08	U	N S U F GN GS	04	A5 A6	4	20.6	10.4	ø3
					06		6	21.6	12.8	ø4

*1 N: NBR, S: Silicone rubber, U: Urethane rubber, F: FKM, GN: Conductive NBR, GS: Conductive silicone rubber

*2 Indicates the minimum hole size of the adapter or vacuum pad

Dimensions/Models

With adapter/One-touch fitting ø10 to ø50

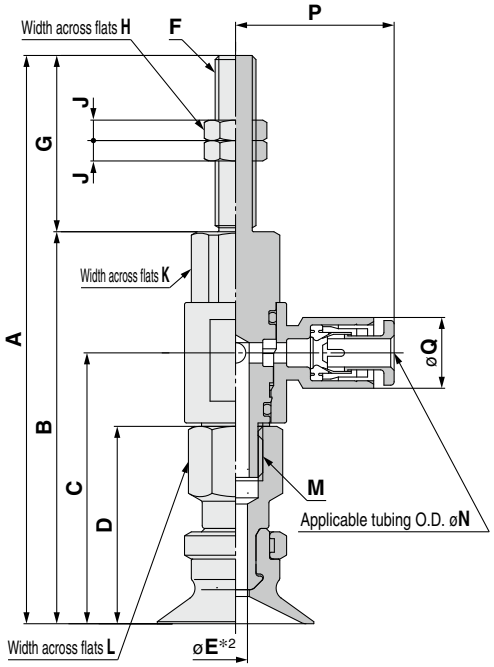

Construction p. 117
Adapter Assembly p. 122

ZPR 10 U N – 04 – A5

❶ ❷ ❸ ❹

❸ Vacuum inlet (One-touch fitting)

04	ø4
06	ø6
08	ø8

❹ Connection thread (Male thread)

A5	M5 x 0.8
A6	M6 x 1
A8	M8 x 1

Model							A	B	C	D	*2 E	F	G	H	J	K	L	M
Vacuum inlet direction		❶ Pad dia.	Form	❷ *1 Material	❸ Vacuum inlet	❹ Connection thread												
ZP	R	10 13	U	N S U F GN GS	04 06 08	A5	67	46	29.9	21	2.5	M5 x 0.8	21	8	4	10	8	M5 x 0.8
		16					67.5	46.5	30.4	21.5								
		10 13				A6	72	46	29.9	21	2.5	M6 x 1	26	8	3	10	8	M5 x 0.8
		16					72.5	46.5	30.4	21.5								
		20 25					83.5	57.6	39.8	29	3.5		25.9			12	12	M8 x 1.25
		32					84	58.1	40.3	29.5								
		40					86.5	60.6	42.8	32	4							
		50					87.5	61.6	43.8	33								
		20 25				A8	73.5	57.6	39.8	29	3.5	M8 x 1	15.9	12	3	12	12	M8 x 1.25
		32					74	58.1	40.3	29.5								
		40					76.5	60.6	42.8	32	4							
		50					77.5	61.6	43.8	33								

Dimensions Per Vacuum Inlet

Model							N	P	Q	Fitting part min. hole size
Vacuum inlet direction		❶ Pad dia.	Form	❷ *1 Material	❸ Vacuum inlet	❹ Connection thread				
ZP	R	10 13 16	U	N S U F GN GS	04	A5 A6	4	20.6	10.4	ø3
					06		6	21.6	12.8	ø4
		20 25 32			04	A6 A8	4	23.3	10.4	ø3
					06		6	24.3	12.8	ø4.5
					08		8	26.2	15.2	ø6
		40 50			06		6	24.3	12.8	ø4.5
					08		8	26.2	15.2	ø6

*1 N: NBR, S: Silicone rubber, U: Urethane rubber, F: FKM, GN: Conductive NBR, GS: Conductive silicone rubber

*2 Indicates the minimum hole size of the adapter or vacuum pad

Dimensions/Models

With adapter/One-touch fitting ø2 to ø8

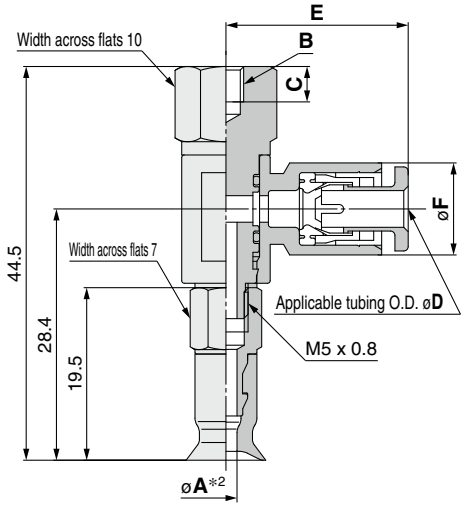

Construction	p. 115
Adapter Assembly	p. 122

ZPR 02 U N – 04 – B4

❶ ❷ ❸ ❹

❸ **Vacuum inlet (One-touch fitting)**

04	ø4
06	ø6

❹ **Connection thread (Female thread)**

B4	M4 x 0.7
B5	M5 x 0.8

Model							A*2	B	C
	Vacuum inlet direction	❶ Pad dia.	Form	❷ *1 Material	❸ Vacuum inlet	❹ Connection thread			
ZP	R	02	U	N S U F GN GS	04 06	B4	1.2	M4 x 0.7	4
		04					1.6		
		06 08					2.5		
		02				B5	1.2	M5 x 0.8	5
		04					1.6		
		06 08					2.5		

Dimensions Per Vacuum Inlet

Model							D	E	F	Fitting part min. hole size
	Vacuum inlet direction	❶ Pad dia.	Form	❷ *1 Material	❸ Vacuum inlet	❹ Connection thread				
ZP	R	02 04 06 08	U	N S U F GN GS	04	B4 B5	4	20.6	10.4	ø3
					06		6	21.6	12.8	ø4

*1 N: NBR, S: Silicone rubber, U: Urethane rubber, F: FKM, GN: Conductive NBR, GS: Conductive silicone rubber

*2 Indicates the minimum hole size of the adapter or vacuum pad

Dimensions/Models

With adapter/One-touch fitting ø10 to ø50

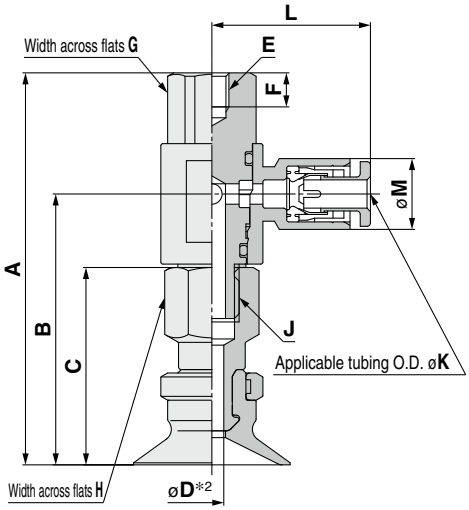

Construction	p. 117
Adapter Assembly	p. 122

ZPR 10 U N – 04 – B5

❶ ❷ ❸ ❹

❸ Vacuum inlet (One-touch fitting)

04	ø4
06	ø6
08	ø8

❹ Connection thread (Female thread)

B5	M5 x 0.8
B6	M6 x 1
B8	M8 x 1.25

Model: Vacuum inlet direction	❶ Pad dia.	Form	❷ Material *1	❸ Vacuum inlet	❹ Connection thread	A	B	C	D*2	E	F	G	H	J
ZP R	10 13	U	N S U F GN GS	04 06 08	B5	46	29.9	21	2.5	M5 x 0.8	5	10	8	M5 x 0.8
	16					46.5	30.4	21.5						
	20 25					57.6	39.8	29	3.5			12	12	M8 x 1.25
	32					58.1	40.3	29.5						
	10 13				B6	46	29.9	21	2.5	M6 x 1	6	10	8	M5 x 0.8
	16					46.5	30.4	21.5						
	20 25					57.6	39.8	29	3.5			12	12	M8 x 1.25
	32					58.1	40.3	29.5						
	40					60.6	42.8	32	4					
	50					61.6	43.8	33						
	20 25				B8	57.6	39.8	29	3.5	M8 x 1.25	8	12	12	M8 x 1.25
	32					58.1	40.3	29.5						
	40					60.6	42.8	32	4					
	50					61.6	43.8	33						

Dimensions Per Vacuum Inlet

Model: Vacuum inlet direction	❶ Pad dia.	Form	❷ Material *1	❸ Vacuum inlet	❹ Connection thread	K	L	M	Fitting part min. hole size
ZP R	10 13 16	U	N S U F GN GS	04	B5 B6	4	20.6	10.4	ø3
				06		6	21.6	12.8	ø4
	20 25 32			04	B5	4	23.3	10.4	ø3
				06	B6	6	24.3	12.8	ø4.5
				08	B8	8	26.2	15.2	ø6
	40 50			06	B6	6	24.3	12.8	ø4.5
				08	B8	8	26.2	15.2	ø6

*1 N: NBR, S: Silicone rubber, U: Urethane rubber, F: FKM, GN: Conductive NBR, GS: Conductive silicone rubber

*2 Indicates the minimum hole size of the adapter or vacuum pad

Dimensions/Models

With adapter/barb fitting ø2 to ø8

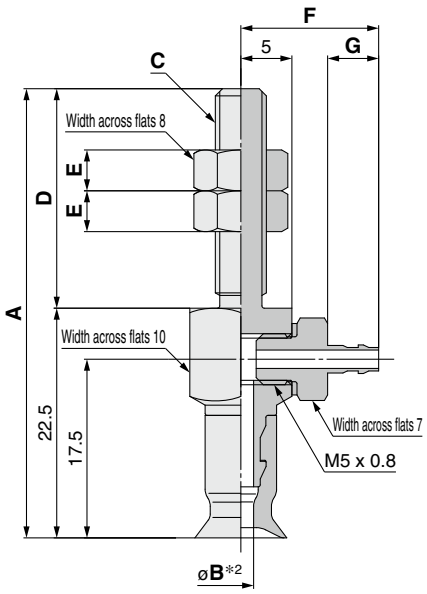

Construction	p. 115
Adapter Assembly	p. 123

ZPY 02 U N – N4 – A5
❶ ❷ ❸ ❹

❸ Vacuum inlet (Barb fitting)

N4	For ø4 nylon tubing	M-5AN-4
N6	For ø6 nylon tubing	M-5AN-6
U4	For ø4 soft tubing	M-5AU-4
U6	For ø6 soft tubing	M-5AU-6

❹ Connection thread (Male thread)

A5	M5 x 0.8
A6	M6 x 1

Model							A	B*2	C	D	E
Vacuum inlet direction	❶ Pad dia.	Form	❷ *1 Material	❸ Vacuum inlet	❹ Connection thread						
ZP	Y	02	U	N S U F GN GS	N4 N6 U4 U6	A5	44	1.2	M5 x 0.8	21.5	4
		04						1.6			
		06 08						2.5			
		02				A6	49.5	1.2	M6 x 1	27	3
		04						1.6			
		06 08						2.5			

Dimensions Per Vacuum Inlet

Model							F	G	Fitting part min. hole size
Vacuum inlet direction	❶ Pad dia.	Form	❷ *1 Material	❸ Vacuum inlet	❹ Connection thread				
ZP	Y	02 04 06 08	U	N S U F GN GS	N4 U4	A5 A6	13.5	5	ø1.8
					N6 U6		15.5	7	ø2.5

*1 N: NBR, S: Silicone rubber, U: Urethane rubber, F: FKM, GN: Conductive NBR, GS: Conductive silicone rubber
*2 Indicates the minimum hole size of the adapter or vacuum pad

Dimensions/Models

With adapter/barb fitting ø10 to ø50

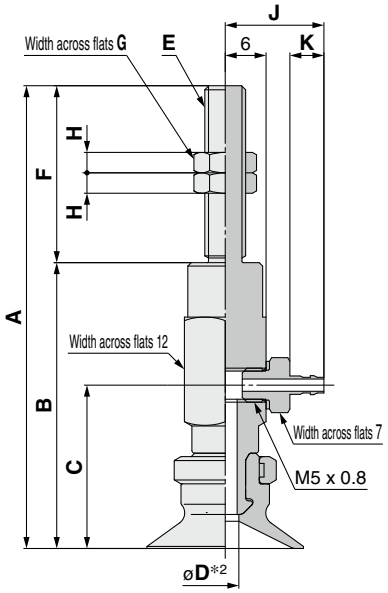

Construction	p. 117
Adapter Assembly	p. 123

ZPY 10 U N – N4 – A5
❶ ❷ ❸ ❹

❸ Vacuum inlet (Barb fitting)

N4	For ø4 nylon tubing	M-5AN-4
N6	For ø6 nylon tubing	M-5AN-6
U4	For ø4 soft tubing	M-5AU-4
U6	For ø6 soft tubing	M-5AU-6

❹ Connection thread (Male thread)

A5	M5 x 0.8
A6	M6 x 1
A8	M8 x 1

Model							A	B	C	D*2	E	F	G	H
	Vacuum inlet direction	❶ Pad dia.	Form	❷ *1 Material	❸ Vacuum inlet	❹ Connection thread								
ZP	Y	10 13	U	N S U F GN GS	N4 N6 U4 U6	A5	59	38	22	2.5	M5 x 0.8	21	8	4
		16					59.5	38.5	22.5					
		10 13				A6	64	38	22	2.5	M6 x 1	26	8	3
		16					64.5	38.5	22.5					
		20 25					68	42	24	3.5				
		32					68.5	42.5	24.5					
		40					72.5	46.5	28.5	6				
		50					73.5	47.5	29.5					
		20 25				A8	58	42	24	3.5	M8 x 1	16	12	3
		32					58.5	42.5	24.5					
		40					62.5	46.5	28.5	6				
		50					63.5	47.5	29.5					

Dimensions Per Vacuum Inlet

Model							J	K	Fitting part min. hole size
	Vacuum inlet direction	❶ Pad dia.	Form	❷ *1 Material	❸ Vacuum inlet	❹ Connection thread			
ZP	Y	10 13 16 20 25 32	U	N S U F GN GS	N4 U4	A5 A6	14.5	5	ø1.8
					N6 U6		16.5	7	ø2.5
		40 50			N6 U6	A6 A8	16.5	7	ø2.5

*1 N: NBR, S: Silicone rubber, U: Urethane rubber, F: FKM, GN: Conductive NBR, GS: Conductive silicone rubber
*2 Indicates the minimum hole size of the adapter or vacuum pad

Dimensions/Models

With adapter/barb fitting ø2 to ø8

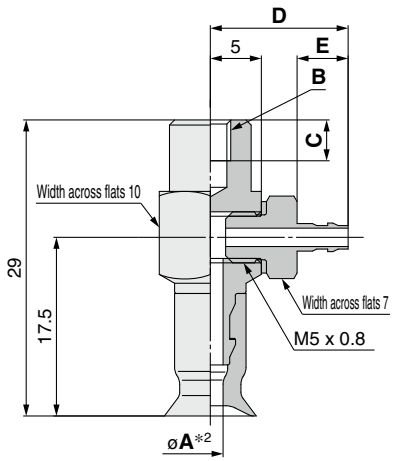

Construction	p. 115
Adapter Assembly	p. 123

ZPY ❶02 U ❷N – N4 – B4

❸ **Vacuum inlet (Barb fitting)**

N4	For ø4 nylon tubing	M-5AN-4
N6	For ø6 nylon tubing	M-5AN-6
U4	For ø4 soft tubing	M-5AU-4
U6	For ø6 soft tubing	M-5AU-6

❹ **Connection thread (Female thread)**

B4	M4 x 0.7
B5	M5 x 0.8

Model							A*2	B	C
	Vacuum inlet direction	❶ Pad dia.	Form	❷ *1 Material	❸ Vacuum inlet	❹ Connection thread			
ZP	Y	02	U	N S U F GN GS	N4 N6 U4 U6	B4	1.2	M4 x 0.7	4
		04					1.6		
		06 08					2.5		
		02				B5	1.2	M5 x 0.8	5
		04					1.6		
		06 08					2.5		

Dimensions Per Vacuum Inlet

Model							D	E	Fitting part min. hole size
	Vacuum inlet direction	❶ Pad dia.	Form	❷ *1 Material	❸ Vacuum inlet	❹ Connection thread			
ZP	Y	02 04 06 08	U	N S U F GN GS	N4 U4	B4 B5	13.5	5	ø1.8
					N6 U6		15.5	7	ø2.5

*1 N: NBR, S: Silicone rubber, U: Urethane rubber, F: FKM, GN: Conductive NBR, GS: Conductive silicone rubber

*2 Indicates the minimum hole size of the adapter or vacuum pad

Dimensions/Models

With adapter/barb fitting ø10 to ø50

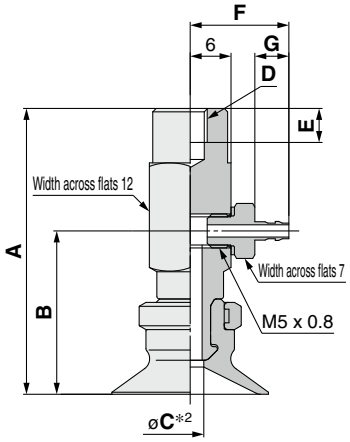

Construction	p. 117
Adapter Assembly	p. 123

ZPY ❶10 U ❷N – ❸N4 – ❹B5

❸ Vacuum inlet (Barb fitting)

N4	For ø4 nylon tubing	M-5AN-4
N6	For ø6 nylon tubing	M-5AN-6
U4	For ø4 soft tubing	M-5AU-4
U6	For ø6 soft tubing	M-5AU-6

❹ Connection thread (Female thread)

B5	M5 x 0.8
B6	M6 x 1
B8	M8 x 1.25

Model							A	B	C*2	D	E
Vacuum inlet direction		❶ Pad dia.	Form	❷ *1 Material	❸ Vacuum inlet	❹ Connection thread					
ZP	Y	10, 13	U	N, S, U, F, GN, GS	N4, N6, U4, U6	B5	38	22	2.5	M5 x 0.8	5
		16					38.5	22.5			
		20, 25					42	24	3.5		
		32					42.5	24.5			
		10, 13				B6	38	22	2.5	M6 x 1	6
		16					38.5	22.5			
		20, 25					42	24	3.5		
		32					42.5	24.5			
		40					46.5	28.5	6		
		50					47.5	29.5			
		20, 25				B8	42	24	3.5	M8 x 1.25	8
		32					42.5	24.5			
		40					46.5	28.5	6		
		50					47.5	29.5			

Dimensions Per Vacuum Inlet

Model							F	G	Fitting part min. hole size
Vacuum inlet direction		❶ Pad dia.	Form	❷ *1 Material	❸ Vacuum inlet	❹ Connection thread			
ZP	Y	10, 13, 16	U	N, S, U, F, GN, GS	N4, U4	B4, B5	14.5	5	ø1.8
					N6, U6		16.5	7	ø2.5
		20, 25, 32			N4, U4	B5, B6, B8	14.5	5	ø1.8
					N6, U6		16.5	7	ø2.5
		40, 50			N6, U6	B6, B8	16.5	7	ø2.5

*1 N: NBR, S: Silicone rubber, U: Urethane rubber, F: FKM, GN: Conductive NBR, GS: Conductive silicone rubber

*2 Indicates the minimum hole size of the adapter or vacuum pad

Dimensions/Models

With buffer ø2 to ø8

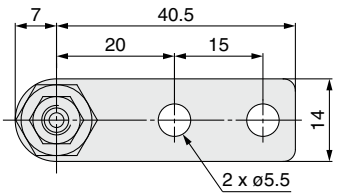

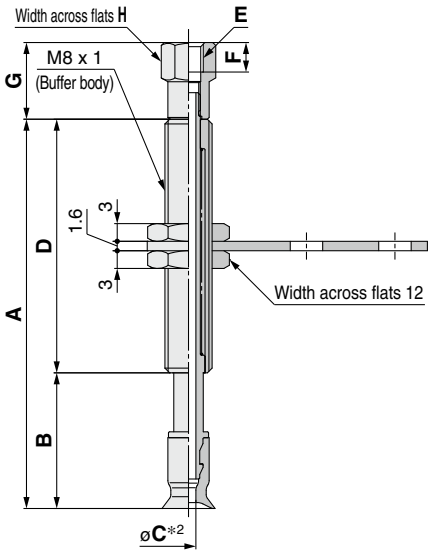

ZPT 02 U N J 6 – B3 – A8

❶ ❷ ❸ ❹ ❺ ❻

❸ Buffer specification

J	Rotating
K	Non-rotating

❻ Connection thread (Male thread)

A8	M8 x 1

❺ Vacuum inlet

B3	M3 x 0.5	Female thread	
B5	M5 x 0.8		
04	ø4	One-touch fitting	KQ2H04-M5N
06	ø6		KQ2H06-M5N
N4	For ø4 nylon tubing	Barb fitting	
U4	For ø4 soft tubing		

Model									A	B	C*2	D
	Vacuum inlet direction	❶ Pad dia.	Form	❷ *1 Material	❸ Buffer spec.	❹ Buffer stroke	❺ Vacuum inlet	❻ Connection thread				
ZP	T	02	U	N S U F GN GS	J K	6	B3 B5 04 06 N4 U4	A8	33	18	1.2	15
						10			66	23		43
						15			71	28		
						25			81	38		
		04				6			33	18	1.6	15
						10			66	23		43
						15			71	28		
						25			81	38		
		06 08				6			33	18	J: 2.5 K: 2	15
						10			66	23		43
						15			71	28		
						25			81	38		

Vacuum inlet: One-touch fitting

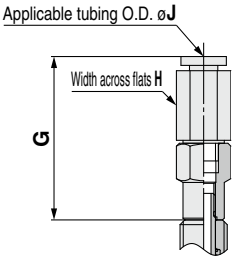

Vacuum inlet: Barb fitting

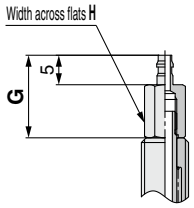

Construction	p. 116
Buffer Assembly	p. 124

Dimensions Per Vacuum Inlet: Female Thread

Model									E	F	G	H
	Vacuum inlet direction	❶ Pad dia.	Form	❷ *1 Material	❸ Buffer spec.	❹ Buffer stroke	❺ Vacuum inlet	❻ Connection thread				
ZP	T	02 04 06 08	U	N S U F GN GS	J K	6 10 15 25	B3	A8	M3 x 0.5	3	11	6
							B5		M5 x 0.8	5	13	8

Dimensions Per Vacuum Inlet: One-touch Fitting

Model									G	H	J	Fitting part min. hole size
	Vacuum inlet direction	❶ Pad dia.	Form	❷ *1 Material	❸ Buffer spec.	❹ Buffer stroke	❺ Vacuum inlet	❻ Connection thread				
ZP	T	02 04 06 08	U	N S U F GN GS	J K	6 10 15 25	04	A8	27.7	8	4	ø2.5
							06			10	6	

Dimensions Per Vacuum Inlet: Barb Fitting

Model									G	H	Fitting part min. hole size
	Vacuum inlet direction	❶ Pad dia.	Form	❷ *1 Material	❸ Buffer spec.	❹ Buffer stroke	❺ Vacuum inlet	❻ Connection thread			
ZP	T	02 04 06 08	U	N S U F GN GS	J K	6 10 15 25	N4	A8	14	6	ø1.8
							U4				

*1 N: NBR, S: Silicone rubber, U: Urethane rubber, F: FKM, GN: Conductive NBR, GS: Conductive silicone rubber

*2 Indicates the minimum hole size of the adapter or vacuum pad

Dimensions/Models

With buffer ø10 to ø50

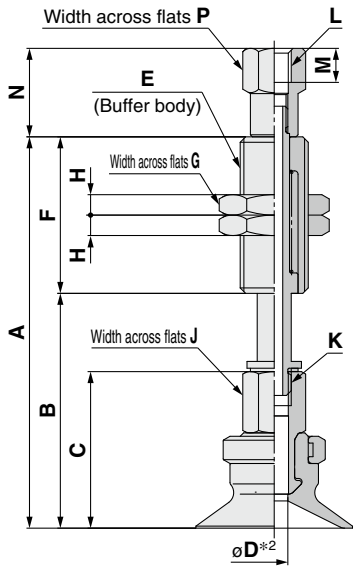

Construction	p. 118
Buffer Assembly	p. 124

ZPT 10 U N J 10 – B5 – A10
❶ ❷ ❸ ❹ ❺ ❻

❸ Buffer specification

J	Rotating
K	Non-rotating

❻ Connection thread (Male thread)

A10	M10 x 1
A14	M14 x 1

❺ Vacuum inlet (Female thread)

B5	M5 x 0.8
B01	Rc1/8
N01	NPT1/8
T01	NPTF1/8

Model									A	B	C	D*2	E	F	G	H	J	K
	Vacuum inlet direction	❶ Pad dia.	Form	❷ *1 Material	❸ Buffer spec.	❹ Buffer stroke	❺ Vacuum inlet	❻ Connection thread										
ZP	T	10 13	U	N S U F GN GS	J K	10	B5 04 06 N6 U6	A10	55.5	32.5	21	J: 2.5 K: 2	M10 x 1	23	14	3	8	M5 x 0.8
						20			93.5	42.5				51				
						30			103.5	52.5								
						40			139.5	62.5				77				
						50			149.5	72.5								
		16				10			56	33	21.5			23				
						20			94	43				51				
						30			104	53								
						40			140	63				77				
						50			150	73								
		20 25				10			57.5	34.5	23			23				
						20			95.5	44.5				51				
						30			105.5	54.5								
						40			141.5	64.5				77				
						50			151.5	74.5								
		32				10			58	35	23.5			23				
						20			96	45				51				
						30			106	55								
						40			142	65				77				
						50			152	75								
		40				10	B5 B01 N01 T01 06 08 N6 U6	A14	94.5	44.5	32	4	M14 x 1	50	19	5	12	M8 x 1.25
						20			104.5	54.5								
						30			114.5	64.5				75				
						50			159.5	84.5								
		50				10			95.5	45.5	33			50				
						20			105.5	55.5								
						30			115.5	65.5				75				
						50			160.5	85.5								

Dimensions Per Vacuum Inlet: Female Thread

Model									L	M	N	P
	Vacuum inlet direction	❶ Pad dia.	Form	❷ *1 Material	❸ Buffer spec.	❹ Buffer stroke	❺ Vacuum inlet	❻ Connection thread				
ZP	T	10 13 16 20 25 32	U	N S U F GN GS	J K	10 20 30 40 50	B5	A10	M5 x 0.8	5	13	8
		40 50				10	B5	A14	M5 x 0.8	4.5	15	10
						20 30 50				5	9	
						10	B01 N01 T01		Rc1/8 NPT1/8 NPTF1/8	—	16.5	13
						20 30 50					12	

*1 N: NBR, S: Silicone rubber, U: Urethane rubber, F: FKM, GN: Conductive NBR, GS: Conductive silicone rubber
*2 Indicates the minimum hole size of the adapter or vacuum pad

Dimensions/Models

With buffer ø10 to ø50

ZPT 10 U N J 10 – 04 – A10
❶ ❷ ❸ ❹ ❺ ❻

❸ Buffer specification

J	Rotating
K	Non-rotating

❻ Connection thread (Male thread)

A10	M10 x 1
A14	M14 x 1

❺ Vacuum inlet

			Pad diameter	
			ø10 to ø32	ø40, ø50 (10 st only)
04	ø4	One-touch fitting	KQ2H04-M5N	
06	ø6		KQ2H06-M5N	KQ2H06-01NS
08	ø8			KQ2H08-01NS
N6	For ø6 nylon tubing	Barb fitting		
U6	For ø6 soft tubing			

Vacuum inlet: One-touch fitting

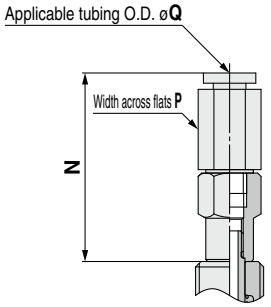

Vacuum inlet: Built-in One-touch fitting
Pad diameter: ø40, ø50 (Buffer stroke: 20 to 50 st)

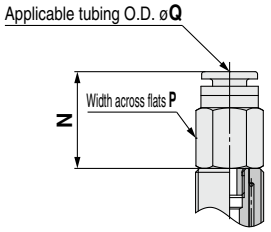

Vacuum inlet: Barb fitting

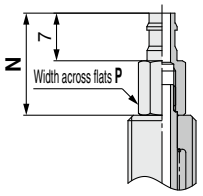

Dimensions Per Vacuum Inlet: One-touch Fitting

Model									N	P	Q	Fitting part min. hole size
	Vacuum inlet direction	❶ Pad dia.	Form	❷ *1 Material	❸ Buffer spec.	❹ Buffer stroke	❺ Vacuum inlet	❻ Connection thread				
ZP	T	10, 13, 16, 20, 25, 32	U	N, S, U, F, GN, GS	J, K	10, 20, 30, 40, 50	04	A10	27.7	8	4	ø2.5
							06			10	6	
		40, 50				10	06	A14	31.8	10	6	ø4.5
							08		35.9	14	8	ø6
						20, 30, 50	06		19.9	12	6	ø3
							08		24.9	14	8	

Dimensions Per Vacuum Inlet: Barb Fitting

Model									N	P	Fitting part min. hole size
	Vacuum inlet direction	❶ Pad dia.	Form	❷ *1 Material	❸ Buffer spec.	❹ Buffer stroke	❺ Vacuum inlet	❻ Connection thread			
ZP	T	10, 13, 16, 20, 25, 32	U	N, S, U, F, GN, GS	J, K	10, 20, 30, 40, 50	N6	A10	15	6	ø2.5
							U6				
		40, 50				10	N6	A14	19	10	
							U6				
						20, 30, 50	N6		12		
							U6				

*1 N: NBR, S: Silicone rubber, U: Urethane rubber, F: FKM, GN: Conductive NBR, GS: Conductive silicone rubber

Construction	p. 118
Buffer Assembly	p. 124

Dimensions/Models

With buffer/One-touch fitting ø2 to ø8

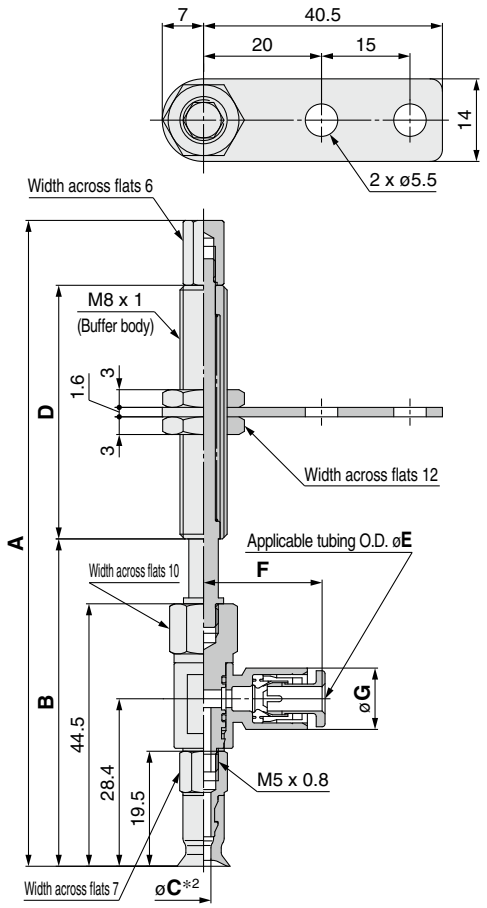

ZPR 02 U N J 6 - 04 - A8
❶ ❷ ❸ ❹ ❺ ❻

❸ Buffer specification

J	Rotating
K	Non-rotating

❻ Connection thread (Male thread)

A8	M8 x 1

❺ Vacuum inlet (One-touch fitting)

04	ø4
06	ø6

Model									A	B	C*2	D
	Vacuum inlet direction	❶ Pad dia.	Form	❷ *1 Material	❸ Buffer spec.	❹ Buffer stroke	❺ Vacuum inlet	❻ Connection thread				
ZP	R	02	U	N S U F GN GS	J K	6	04 06	A8	78.5	52.5	1.2	15
						10			109.5	55.5		43
						15			114.5	60.5		
						25			124.5	70.5		
		04				6			78.5	52.5	1.6	15
						10			109.5	55.5		43
						15			114.5	60.5		
						25			124.5	70.5		
		06 08				6			78.5	52.5	2.5	15
						10			109.5	55.5		43
						15			114.5	60.5		
						25			124.5	70.5		

Dimensions Per Vacuum Inlet

Model									E	F	G	Fitting part min. hole size
	Vacuum inlet direction	❶ Pad dia.	Form	❷ *1 Material	❸ Buffer spec.	❹ Buffer stroke	❺ Vacuum inlet	❻ Connection thread				
ZP	R	02 04 06 08	U	N S U F GN GS	J K	6 10 15 25	04	A8	4	20.6	10.4	ø3
							06		6	21.6	12.8	ø4

*1 N: NBR, S: Silicone rubber, U: Urethane rubber, F: FKM, GN: Conductive NBR, GS: Conductive silicone rubber

*2 Indicates the minimum hole size of the adapter or vacuum pad

Construction	p. 116
Buffer Assembly	p. 125

Dimensions/Models

With buffer/One-touch fitting ø10 to ø50

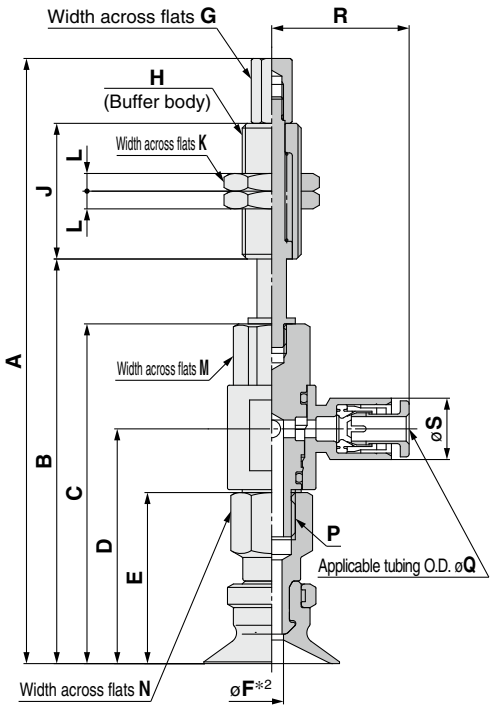

Construction	p. 118
Buffer Assembly	p. 125

ZPR 10 U N J 10 - 04 - A10

❶ ❷ ❸ ❹ ❺ ❻

❸ Buffer specification

J	Rotating
K	Non-rotating

❻ Connection thread (Male thread)

A10	M10 x 1
A14	M14 x 1

❺ Vacuum inlet (One-touch fitting)

04	ø4
06	ø6
08	ø8

Model									A	B	C	D	E	*2 F	G	H	J	K	L	M	N	P
	Vacuum inlet direction	❶ Pad dia.	Form	❷ *1 Material	❸ Buffer spec.	❹ Buffer stroke	❺ Vacuum inlet	❻ Connection thread														
ZP	R	10 13	U	N S U F GN GS	J K	10	04 06	A10	91	57	46	29.9	21	2.5	6	M10 x 1	23	14	3	10	8	M5 x 0.8
						20			129	67							51					
						30			139	77							77					
						40			175	87												
						50			185	97												
		16				10			91.5	57.5	46.5	30.4	21.5				23					
						20			129.5	67.5							51					
						30			139.5	77.5												
						40			175.5	87.5							77					
						50		A10	185.5	97.5												
		20 25				10	04 06 08		102.6	68.6	57.6	39.8	29	3.5			23			12	12	M8 x 1.25
						20			140.6	78.6							51					
						30			150.6	88.6												
						40			186.6	98.6							77					
						50			196.6	108.6												
		32				10			103.1	69.1	58.1	40.3	29.5				23					
						20			141.1	79.1							51					
						30			151.1	89.1												
						40			187.1	99.1							77					
						50			197.1	109.6												
		40				10	06 08	A14	140.6	72.6	60.6	42.8	32	4	10	M14 x 1	50	19	5	12	12	M8 x 1.25
						20			137.6	82.6												
						30			147.6	92.6												
						50			192.6	112.6							75					
		50				10			141.6	73.6	61.6	43.8	33				50					
						20			138.6	83.6												
						30			148.6	93.6												
						50			193.6	113.6							75					

Dimensions Per Vacuum Inlet

Model									Q	R	S	Fitting part min. hole size
	Vacuum inlet direction	❶ Pad dia.	Form	❷ *1 Material	❸ Buffer spec.	❹ Buffer stroke	❺ Vacuum inlet	❻ Connection thread				
ZP	R	10 13 16	U	N S U F GN GS	J K	10 20 30 40 50	04	A10	4	20.6	10.4	ø3
							06		6	21.6	12.8	ø4
		20 25 32				10 20 30 40 50	04		4	23.3	10.4	ø3
							06		6	24.3	12.8	ø4.5
							08		8	26.2	15.2	ø6
		40 50				10 20 30 50	06	A14	6	24.3	12.8	ø4.5
							08		8	26.2	15.2	ø6

*1 N: NBR, S: Silicone rubber, U: Urethane rubber, F: FKM, GN: Conductive NBR, GS: Conductive silicone rubber

*2 Indicates the minimum hole size of the adapter or vacuum pad

Dimensions/Models

With buffer/barb fitting ø2 to ø8

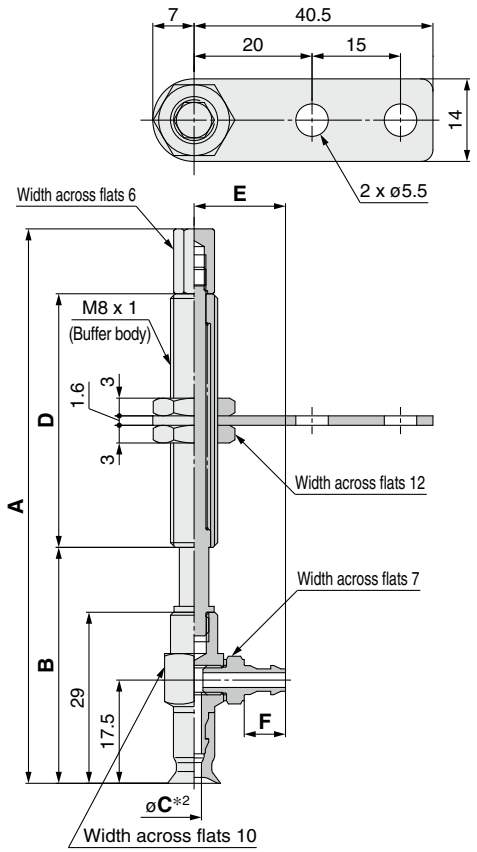

Construction	p. 116
Buffer Assembly	p. 126

ZPY 02 U N J 6 – N4 – A8
❶ ❷ ❸ ❹ ❺ ❻

❸ Buffer specification

J	Rotating
K	Non-rotating

❻ Connection thread (Male thread)

A8	M8 x 1

❺ Vacuum inlet (Barb fitting)

N4	For ø4 nylon tubing	M-5AN-4
N6	For ø6 nylon tubing	M-5AN-6
U4	For ø4 soft tubing	M-5AU-4
U6	For ø6 soft tubing	M-5AU-6

Model									A	B	C*2	D
	Vacuum inlet direction	❶ Pad dia.	Form	❷ *1 Material	❸ Buffer spec.	❹ Buffer stroke	❺ Vacuum inlet	❻ Connection thread				
ZP	Y	02	U	N S U F GN GS	J K	6	N4 N6 U4 U6	A8	63	37	1.2	15
						10			94	40		43
						15			99	45		
						25			109	55		
		04				6			63	37	1.6	15
						10			94	40		43
						15			99	45		
						25			109	55		
		06 08				6			63	37	2.5	15
						10			94	40		43
						15			99	45		
						25			109	55		

Dimensions Per Vacuum Inlet

Model									E	F	Fitting part min. hole size
	Vacuum inlet direction	❶ Pad dia.	Form	❷ *1 Material	❸ Buffer spec.	❹ Buffer stroke	❺ Vacuum inlet	❻ Connection thread			
ZP	Y	02 04 06 08	U	N S U F GN GS	J K	6 10 15 25	N4 U4	A8	13.5	5	ø1.8
							N6 U6		15.5	7	ø2.5

*1 N: NBR, S: Silicone rubber, U: Urethane rubber, F: FKM, GN: Conductive NBR, GS: Conductive silicone rubber
*2 Indicates the minimum hole size of the adapter or vacuum pad

Dimensions/Models

With buffer/barb fitting ø10 to ø50

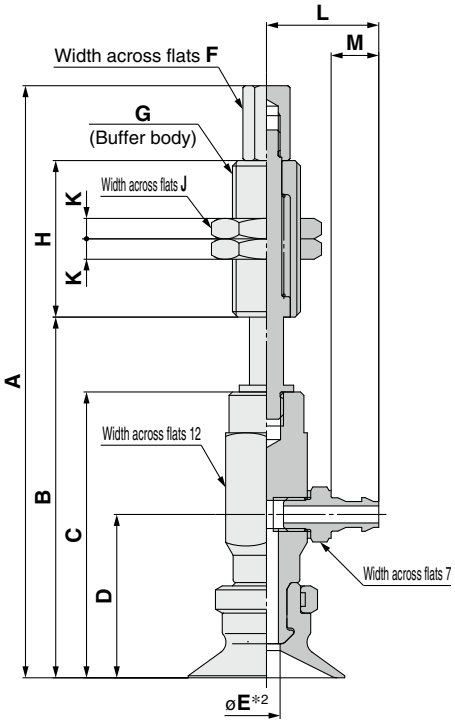

Construction	p. 118
Buffer Assembly	p. 126

ZPY ❶10 U ❷N ❸J ❹10 – ❺N4 – ❻A10

❸ Buffer specification

J	Rotating
K	Non-rotating

❻ Connection thread (Male thread)

A10	M10 x 1
A14	M14 x 1

❺ Vacuum inlet (Barb fitting)

N4	For ø4 nylon tubing	M-5AN-4
N6	For ø6 nylon tubing	M-5AN-6
U4	For ø4 soft tubing	M-5AU-4
U6	For ø6 soft tubing	M-5AU-6

Model									A	B	C	D	*2 E	F	G	H	J	K
	Vacuum inlet direction	❶ Pad dia.	Form	❷ *1 Material	❸ Buffer spec.	❹ Buffer stroke	❺ Vacuum inlet	❻ Connection thread										
ZP	Y	10, 13	U	N, S, U, F, GN, GS	J, K	10	N4, N6, U4, U6	A10	83	49	38	22	2.5	6	M10 x 1	23	14	3
						20			121	59						51		
						30			131	69						77		
						40			167	79								
						50			177	89								
		16				10			83.5	49.5	38.5	22.5				23		
						20			121.5	59.5						51		
						30			131.5	69.5						77		
						40			167.5	79.5								
						50			177.5	89.5								
		20, 25				10			87	53	42	24	3.5	6	M10 x 1	23	14	3
						20			125	63						51		
						30			135	73						77		
						40			171	83								
						50			181	93								
		32				10			87.5	53.5	42.5	24.5				23		
						20			125.5	63.5						51		
						30			135.5	73.5						77		
						40			171.5	83.5								
						50			181.5	93.5								
		40				10	N6, U6	A14	126.5	58.5	46.5	28.5	6	10	M14 x 1	50	19	5
						20			123.5	68.5								
						30			133.5	78.5								
						50			178.5	98.5						75		
		50				10			127.5	59.5	47.5	29.5				50		
						20			124.5	69.5								
						30			134.5	79.5								
						50			179.5	99.5						75		

Dimensions Per Vacuum Inlet

Model									L	M	Fitting part min. hole size
	Vacuum inlet direction	❶ Pad dia.	Form	❷ *1 Material	❸ Buffer spec.	❹ Buffer stroke	❺ Vacuum inlet	❻ Connection thread			
ZP	Y	10, 13, 16, 20, 25, 32	U	N, S, U, F, GN, GS	J, K	10, 20, 30, 40, 50	N4, U4	A10	14.5	5	ø1.8
							N6, U6		16.5	7	ø2.5
		40, 50					N6, U6	A14	16.5	7	ø2.5

*1 N: NBR, S: Silicone rubber, U: Urethane rubber, F: FKM, GN: Conductive NBR, GS: Conductive silicone rubber

*2 Indicates the minimum hole size of the adapter or vacuum pad

Basic Pad
Flat Type with Ribs
ZP Series





How to Order

	Dimensions/ Models	Construction	Mounting Bracket Assembly
Pad unit ZP 10 C N – □	p. **51**	p. **117**	From p. **121**
With adapter ZP T 10 C N – A5 – □	From p. **51**	p. **117**	From p. **121**
With buffer ZP T 10 C N J 10 – B5 – A10	From p. **57**	p. **118**	From p. **124**

∗ Pad unit's sales unit: 10 pcs.

❶ ❷ ❸ ❹ ❺ ❻ ❼ ❽

● Flat type with ribs

❶ Vacuum inlet direction

Nil	Pad unit
T	Vertical
R	Lateral (With One-touch fitting)
Y	Lateral (With barb fitting)

❷ Pad diameter

10	ø10
13	ø13
16	ø16
20	ø20
25	ø25
32	ø32
40	ø40
50	ø50

❸ Material

N	NBR
S	Silicone rubber∗1
U	Urethane rubber
F	FKM
GN	Conductive NBR
GS	Conductive silicone rubber

❹ Buffer specification

J	Rotating
K	Non-rotating

❺ Buffer stroke

Stroke [mm]	Pad diameter [mm]							
	ø10	ø13	ø16	ø20	ø25	ø32	ø40	ø50
10	●	●	●	●	●	●	●	●
20	●	●	●	●	●	●	●	●
30	●	●	●	●	●	●	●	●
40	●	●	●	●	●	●	—	—
50	●	●	●	●	●	●	●	●

∗1 Compliant with the FDA (USA Food and Drug Administration) regulation 21CFR§177.2600 for "Rubber articles intended for repeated use"

With adapter

❻ Vacuum inlet

○: ZPT/Vertical ●: ZPR/Lateral (With One-touch fitting) △: ZPY/Lateral (With barb fitting)

Type	Symbol	Size	Pad diameter [mm]		
			ø10 to ø16	ø20 to ø32	ø40, ø50
Male thread	**A5**	M5 x 0.8	○	—	—
	A6	M6 x 1	○	○	○
	A8	M8 x 1	—	○	○
Female thread	**B5**	M5 x 0.8	○	○	—
	B6	M6 x 1	○	○	○
	B8	M8 x 1.25	—	○	○
	B01	Rc1/8	○	○	○
	N01	NPT1/8	○	○	○
	T01	NPTF1/8	○	○	○
One-touch fitting	**04**	ø4	●	●	—
	06	ø6	●	●	●
	08	ø8	—	●	●
Barb fitting	**N4**	For ø4 nylon tubing	△	△	—
	N6	For ø6 nylon tubing	△	△	△
	U4	For ø4 soft tubing	△	△	—
	U6	For ø6 soft tubing	△	△	△

❼ Connection thread

●: ZPR/Lateral (With One-touch fitting) △: ZPY/Lateral (With barb fitting)

Type	Symbol	Size	Pad diameter [mm]		
			ø10 to ø16	ø20 to ø32	ø40, ø50
Male thread	**A5**	M5 x 0.8	●△	—	—
	A6	M6 x 1	●△	●△	●△
	A8	M8 x 1	—	●△	●△
Female thread	**B5**	M5 x 0.8	●△	●△	—
	B6	M6 x 1	●△	●△	●△
	B8	M8 x 1.25	—	●△	●△

It is not necessary to select a connection thread for ○: ZPT/Vertical. Use the vacuum inlet.

With buffer

❻ Vacuum inlet

○: ZPT/Vertical ●: ZPR/Lateral (With One-touch fitting) △: ZPY/Lateral (With barb fitting)

Type	Symbol	Size	Pad diameter [mm]		
			ø10 to ø16	ø20 to ø32	ø40, ø50
Female thread	**B5**	M5 x 0.8	○	○	○
	B01	Rc1/8	—	—	○
	N01	NPT1/8	—	—	○
	T01	NPTF1/8	—	—	○
One-touch fitting	**04**	ø4	○●	○●	—
	06	ø6	○●	○●	○●
	08	ø8	—	●	○●
Barb fitting	**N4**	For ø4 nylon tubing∗1	△	△	—
	N6	For ø6 nylon tubing∗1	○△	○△	○△
	U4	For ø4 soft tubing∗2	△	△	—
	U6	For ø6 soft tubing∗2	○△	○△	○△

∗1 Nylon tube piping
∗2 Soft nylon/Polyurethane tube piping

❼ Connection thread

○: ZPT/Vertical ●: ZPR/Lateral (With One-touch fitting) △: ZPY/Lateral (With barb fitting)

Type	Symbol	Size	Pad diameter [mm]		
			ø10 to ø16	ø20 to ø32	ø40, ø50
Male thread	**A10**	M10 x 1	○●△	○●△	—
	A14	M14 x 1	—	—	○●△

❽ Lock ring

Symbol	Pad diameter
	All sizes
Nil	With lock ring
X19	Without lock ring

Lock ring unit

Part no.	Pad diameter [mm]
ZPL1	ø10 to ø16
ZPL2	ø20 to ø32
ZPL3	ø40, ø50

∗ The pad, mounting nut, fitting, and buffer plate are shipped together but do not come assembled.

Dimensions/Models

Single unit ø10 to ø50

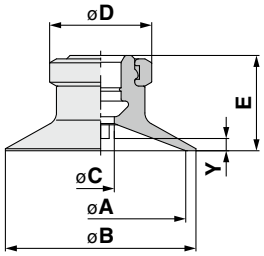

Construction	p. 117
Mounting Bracket Assembly	From p. 121

ZP 10 C N
❶ ❷

Model ❶ Pad dia.	Form	❷ *1 Material	A	B	C	D	E	Y
10	C	NSUFGNGS	10	12	4	13	12	1.7
13			13	15				1.8
16			16	18			12.5	1.2
20			20	23		15	14	1.7
25			25	28				1.8
32			32	35			14.5	2.3
40			40	43	7	18	18.5	3.3
50			50	53			19.5	3.8

*1 N: NBR, S: Silicone rubber, U: Urethane rubber, F: FKM, GN: Conductive NBR, GS: Conductive silicone rubber

With adapter ø10 to ø50

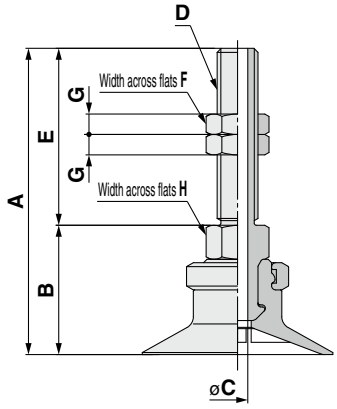

Construction	p. 117
Adapter Assembly	p. 121

ZPT 10 C N - A5
❶ ❷ ❸

❸ **Vacuum inlet (Male thread)**

A5	M5 x 0.8
A6	M6 x 1
A8	M8 x 1

Model Vacuum inlet direction	❶ Pad dia.	Form	❷ *1 Material	❸ Vacuum inlet	A	B	C	D	E	F	G	H
T	10, 13	C	NSUFGNGS	A5	38	17	2.5	M5 x 0.8	21	8	4	8
	16				38.5	17.5						
	10, 13			A6	43	17	2.5	M6 x 1	26	8	3	8
	16				43.5	17.5						
	20, 25				45	19	3					
	32				45.5	19.5						12
	40				50.5	24.5						
	50				51.5	25.5						
	20, 25			A8	40	24	3.5	M8 x 1	16	12	3	12
	32				40.5	24.5	4.5					
	40											
	50				41.5	25.5						

*1 N: NBR, S: Silicone rubber, U: Urethane rubber, F: FKM, GN: Conductive NBR, GS: Conductive silicone rubber

Recommended Gasket Part Nos.

Part no.	D vacuum inlet (Male thread)
WCS5X0.8	M5 x 0.8
WCS6X1	M6 x 1
WCS8X1	M8 x 1

Dimensions/Models

With adapter ø10 to ø50

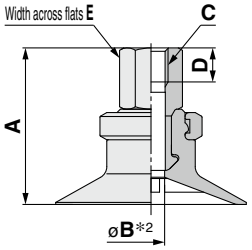

Construction	p. 117
Adapter Assembly	p. 121

ZPT ❶10 C ❷N – ❸B5

❸ Vacuum inlet (Female thread)

B5	M5 x 0.8
B6	M6 x 1
B8	M8 x 1.25
B01	Rc1/8
N01	NPT1/8
T01	NPTF1/8

Model						A	B*2	C	D	E
	Vacuum inlet direction	❶ Pad dia.	Form	❷ *1 Material	❸ Vacuum inlet					
ZP	T	10 13	C	N S U F GN GS	B5	21	2.5	M5 x 0.8	5	8
		16				21.5				
		20 25				23	4			
		32				23.5				
		10 13			B6	21	2.5	M6 x 1	6	8
		16				21.5				
		20 25				23	4			
		32				23.5				
		40				32	4.9			12
		50				33				
		20 25			B8	29	3.5	M8 x 1.25	8	12
		32				29.5				
		40				32	6.6			
		50				33				
		10 13			B01 N01 T01	27	2.5	Rc1/8 NPT1/8 NPTF1/8	—	12
		16				27.5				
		20 25				29	3.5			
		32				29.5				
		40				32	7			
		50				33				

*1 N: NBR, S: Silicone rubber, U: Urethane rubber, F: FKM, GN: Conductive NBR, GS: Conductive silicone rubber

*2 Indicates the minimum hole size of the adapter or vacuum pad

Dimensions/Models

With adapter/One-touch fitting ø10 to ø50

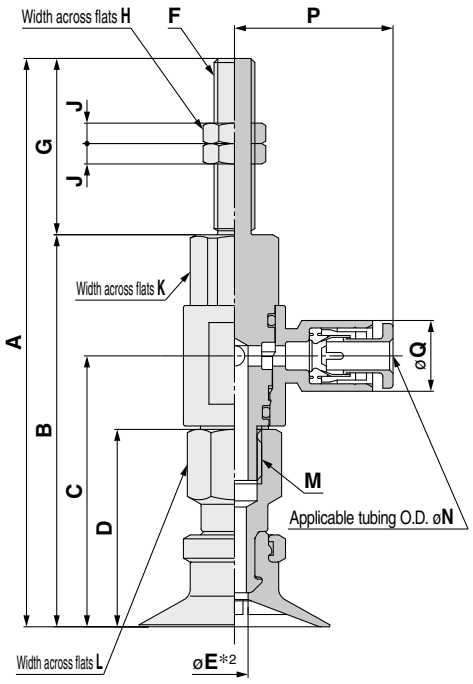

ZPR 10 C N – 04 – A5

❶ ❷ ❸ ❹

❸ Vacuum inlet (One-touch fitting)

04	ø4
06	ø6
08	ø8

❹ Connection thread (Male thread)

A5	M5 x 0.8
A6	M6 x 1
A8	M8 x 1

Construction	p. 117
Adapter Assembly	p. 122

Model							A	B	C	D	E*2	F	G	H	J	K	L	M
Vacuum inlet direction		❶ Pad dia.	Form	❷ Material*1	❸ Vacuum inlet	❹ Connection thread												
ZP	R	10 13	C	N S U F GN GS	04 06 08	A5	67	46	29.9	21	2.5	M5 x 0.8	21	8	4	10	8	M5 x 0.8
		16					67.5	46.5	30.4	21.5								
		10 13				A6	72	46	29.9	21	2.5	M6 x 1	26	8	3	10	8	M5 x 0.8
		16					72.5	46.5	30.4	21.5								
		20 25					83.5	57.6	39.8	29	3.5		25.9			12	12	M8 x 1.25
		32					84	58.1	40.3	29.5								
		40					86.5	60.6	42.8	32	4							
		50					87.5	61.6	43.8	33								
		20 25				A8	73.5	57.6	39.8	29	3.5	M8 x 1	15.9	12	3	12	12	M8 x 1.25
		32					74	58.1	40.3	29.5								
		40					76.5	60.6	42.8	32	4							
		50					77.5	61.6	43.8	33								

Dimensions Per Vacuum Inlet

Model							N	P	Q	Fitting part min. hole size
Vacuum inlet direction		❶ Pad dia.	Form	❷ Material*1	❸ Vacuum inlet	❹ Connection thread				
ZP	R	10 13 16	C	N S U F GN GS	04	A5 A6	4	20.6	10.4	ø3
					06		6	21.6	12.8	ø4
		20 25 32			04	A6 A8	4	23.3	10.4	ø3
					06		6	24.3	12.8	ø4.5
					08		8	26.2	15.2	ø6
		40 50			06	A6	6	24.3	12.8	ø4.5
					08	A8	8	26.2	15.2	ø6

*1 N: NBR, S: Silicone rubber, U: Urethane rubber, F: FKM, GN: Conductive NBR, GS: Conductive silicone rubber

*2 Indicates the minimum hole size of the adapter or vacuum pad

Dimensions/Models

With adapter/One-touch fitting ø10 to ø50

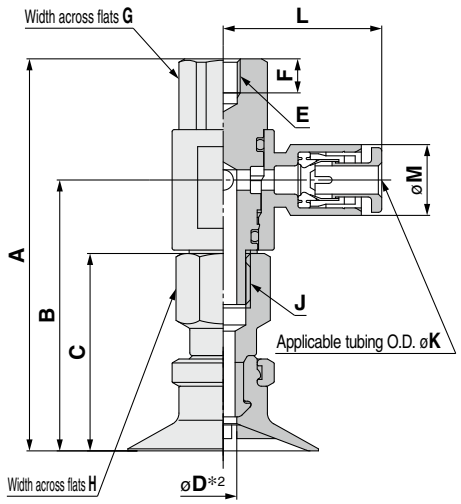

Construction	p. 117
Adapter Assembly	p. 122

ZPR 10 C N – 04 – B5
❶ ❷ ❸ ❹

❸ **Vacuum inlet (One-touch fitting)**

04	ø4
06	ø6
08	ø8

❹ **Connection thread (Female thread)**

B5	M5 x 0.8
B6	M6 x 1
B8	M8 x 1.25

Model							A	B	C	D*2	E	F	G	H	J
Vacuum inlet direction		❶ Pad dia.	Form	❷ *1 Material	❸ Vacuum inlet	❹ Connection thread									
ZP	R	10, 13	C	N, S, U, F, GN, GS	04, 06, 08	B5	46	29.9	21	2.5	M5 x 0.8	5	10	8	M5 x 0.8
		16					46.5	30.4	21.5						
		20, 25					57.6	39.8	29	3.5			12	12	M8 x 1.25
		32					58.1	40.3	29.5						
		10, 13				B6	46	29.9	21	2.5	M6 x 1	6	10	8	M5 x 0.8
		16					46.5	30.4	21.5						
		20, 25					57.6	39.8	29	3.5			12	12	M8 x 1.25
		32					58.1	40.3	29.5						
		40					60.6	42.8	32	4					
		50					61.6	43.8	33						
		20, 25				B8	57.6	39.8	29	3.5	M8 x 1.25	8	12	12	M8 x 1.25
		32					58.1	40.3	29.5						
		40					60.6	42.8	32	4					
		50					61.6	43.8	33						

Dimensions Per Vacuum Inlet

Model							K	L	M	Fitting part min. hole size
Vacuum inlet direction		❶ Pad dia.	Form	❷ *1 Material	❸ Vacuum inlet	❹ Connection thread				
ZP	R	10, 13, 16	C	N, S, U, F, GN, GS	04	B5	4	20.6	10.4	ø3
					06	B6	6	21.6	12.8	ø4
		20, 25, 32			04	B5	4	23.3	10.4	ø3
					06	B6	6	24.3	12.8	ø4.5
					08	B8	8	26.2	15.2	ø6
		40, 50			06	B6	6	24.3	12.8	ø4.5
					08	B8	8	26.2	15.2	ø6

*1 N: NBR, S: Silicone rubber, U: Urethane rubber, F: FKM, GN: Conductive NBR, GS: Conductive silicone rubber

*2 Indicates the minimum hole size of the adapter or vacuum pad

Dimensions/Models

With adapter/barb fitting ø10 to ø50

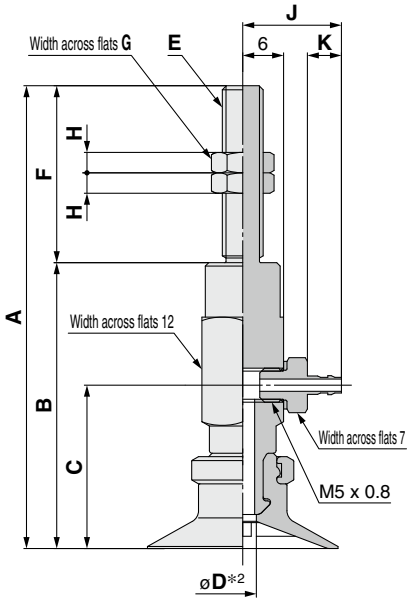

Construction	p. 117
Adapter Assembly	p. 123

ZPY ❶10 C ❷N – N4 – A5

❸ **Vacuum inlet (Barb fitting)**

N4	For ø4 nylon tubing	M-5AN-4
N6	For ø6 nylon tubing	M-5AN-6
U4	For ø4 soft tubing	M-5AU-4
U6	For ø6 soft tubing	M-5AU-6

❹ **Connection thread (Male thread)**

A5	M5 x 0.8
A6	M6 x 1
A8	M8 x 1

Model							A	B	C	D*2	E	F	G	H
	Vacuum inlet direction	❶ Pad dia.	Form	❷ Material*1	❸ Vacuum inlet	❹ Connection thread								
ZP	Y	10 13	C	N S U F GN GS	N4 N6 U4 U6	A5	59	38	22	2.5	M5 x 0.8	21	8	4
		16					59.5	38.5	22.5					
		10 13				A6	64	38	22	2.5	M6 x 1	26	8	3
		16					64.5	38.5	22.5					
		20 25					68	42	24	3.5				
		32					68.5	42.5	24.5					
		40					72.5	46.5	28.5	6				
		50					73.5	47.5	29.5					
		20 25				A8	58	42	24	3.5	M8 x 1	16	12	3
		32					58.5	42.5	24.5					
		40					62.5	46.5	28.5	6				
		50					63.5	47.5	29.5					

Dimensions Per Vacuum Inlet

Model							J	K	Fitting part min. hole size
	Vacuum inlet direction	❶ Pad dia.	Form	❷ Material*1	❸ Vacuum inlet	❹ Connection thread			
ZP	Y	10 13 16 20 25 32	C	N S U F GN GS	N4 U4	A5 A6	14.5	5	ø1.8
					N6 U6		16.5	7	ø2.5
		40 50			N6 U6	A6 A8	16.5	7	ø2.5

*1 N: NBR, S: Silicone rubber, U: Urethane rubber, F: FKM, GN: Conductive NBR, GS: Conductive silicone rubber

*2 Indicates the minimum hole size of the adapter or vacuum pad

Dimensions/Models

With adapter/barb fitting ø10 to ø50

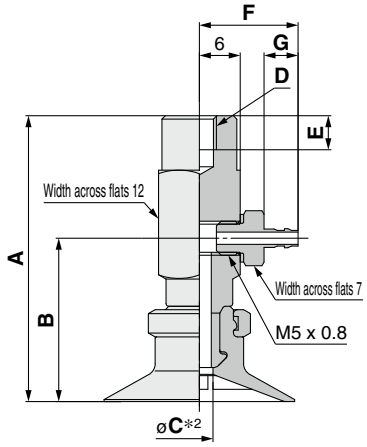

Construction	p. 117
Adapter Assembly	p. 123

ZPY 10 C N – N4 – B5
❶ ❷ ❸ ❹

❸ **Vacuum inlet (Barb fitting)**

N4	For ø4 nylon tubing	M-5AN-4
N6	For ø6 nylon tubing	M-5AN-6
U4	For ø4 soft tubing	M-5AU-4
U6	For ø6 soft tubing	M-5AU-6

❹ **Connection thread (Female thread)**

B5	M5 x 0.8
B6	M6 x 1
B8	M8 x 1.25

Model							A	B	C*2	D	E
	Vacuum inlet direction	❶ Pad dia.	Form	❷ Material*1	❸ Vacuum inlet	❹ Connection thread					
ZP	Y	10, 13	C	N, S, U, F, GN, GS	N4, N6, U4, U6	B5	38	22	2.5	M5 x 0.8	5
		16					38.5	22.5			
		20, 25					42	24	3.5		
		32					42.5	24.5			
		10, 13				B6	38	22	2.5	M6 x 1	6
		16					38.5	22.5			
		20, 25					42	24	3.5		
		32					42.5	24.5			
		40					46.5	28.5	6		
		50					47.5	29.5			
		20, 25				B8	42	24	3.5	M8 x 1.25	8
		32					42.5	24.5			
		40					46.5	28.5	6		
		50					47.5	29.5			

Dimensions Per Vacuum Inlet

Model							F	G	Fitting part min. hole size
	Vacuum inlet direction	❶ Pad dia.	Form	❷ Material*1	❸ Vacuum inlet	❹ Connection thread			
ZP	Y	10, 13, 16	C	N, S, U, F, GN, GS	N4, U4	B4, B5	14.5	5	ø1.8
					N6, U6		16.5	7	ø2.5
		20, 25, 32			N4, U4	B5, B6, B8	14.5	5	ø1.8
					N6, U6		16.5	7	ø2.5
		40, 50			N6, U6	B6, B8	16.5	7	ø2.5

*1 N: NBR, S: Silicone rubber, U: Urethane rubber, F: FKM, GN: Conductive NBR, GS: Conductive silicone rubber
*2 Indicates the minimum hole size of the adapter or vacuum pad

Dimensions/Models

With buffer ø10 to ø50

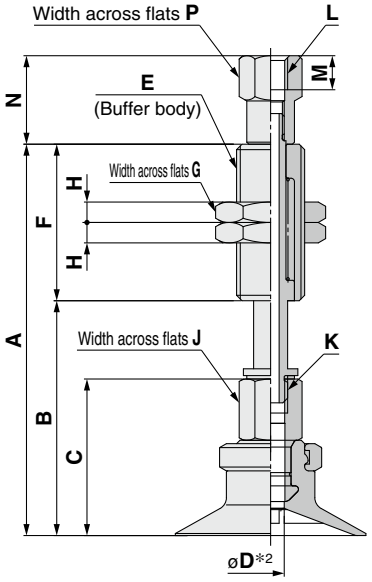

Construction	p. 118
Buffer Assembly	p. 124

ZPT 10 C N J 10 – B5 – A10
❶ ❷ ❸ ❹ ❺ ❻

❸ Buffer specification

J	Rotating
K	Non-rotating

❻ Connection thread (Male thread)

A10	M10 x 1
A14	M14 x 1

❺ Vacuum inlet (Female thread)

B5	M5 x 0.8
B01	Rc1/8
N01	NPT1/8
T01	NPTF1/8

Model									A	B	C	D*2	E	F	G	H	J	K
	Vacuum inlet direction	❶ Pad dia.	Form	❷ *1 Material	❸ Buffer spec.	❹ Buffer stroke	❺ Vacuum inlet	❻ Connection thread										
ZP	T	10 13	C	N S U F GN GS	J K	10	B5 04 06 N6 U6	A10	55.5	32.5	21	J: 2.5 K: 2	M10 x 1	23	14	3	8	M5 x 0.8
						20			93.5	42.5				51				
						30			103.5	52.5				77				
						40			139.5	62.5								
						50			149.5	72.5								
		16				10			56	33	21.5			23				
						20			94	43				51				
						30			104	53				77				
						40			140	63								
						50			150	73								
		20 25				10			57.5	34.5	23			23				
						20			95.5	44.5				51				
						30			105.5	54.5				77				
						40			141.5	64.5								
						50			151.5	74.5								
		32				10			58	35	23.5			23				
						20			96	45				51				
						30			106	55				77				
						40			142	65								
						50			152	75								
		40				10	B5 B01 N01 T01 06 08 N6 U6	A14	94.5	44.5	32	4	M14 x 1	50	19	5	12	M8 x 1.25
						20			104.5	54.5								
						30			114.5	64.5				75				
						50			159.5	84.5								
		50				10			95.5	45.5	33			50				
						20			105.5	55.5								
						30			115.5	65.5				75				
						50			160.5	85.5								

Dimensions Per Vacuum Inlet: Female Thread

Model									L	M	N	P
	Vacuum inlet direction	❶ Pad dia.	Form	❷ *1 Material	❸ Buffer spec.	❹ Buffer stroke	❺ Vacuum inlet	❻ Connection thread				
ZP	T	10 13 16 20 25 32	C	N S U F GN GS	J K	10 20 30 40 50	B5	A10	M5 x 0.8	5	13	8
		40 50				10	B5	A14	M5 x 0.8	4.5	15	10
						20 30 50				5	9	
						10	B01 N01 T01		Rc1/8 NPT1/8 NPTF1/8	—	16.5	13
						20 30 50					12	

*1 N: NBR, S: Silicone rubber, U: Urethane rubber, F: FKM, GN: Conductive NBR, GS: Conductive silicone rubber

*2 Indicates the minimum hole size of the adapter or vacuum pad

Dimensions/Models

With buffer ø10 to ø50

ZPT 10 C N J 10 – 04 – A10
❶ ❷ ❹ ❺ ❻

Vacuum inlet: One-touch fitting

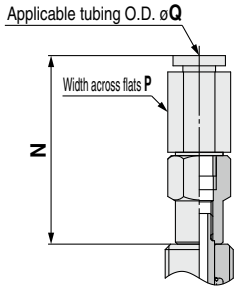

❸ Buffer specification

J	Rotating
K	Non-rotating

❻ Connection thread (Male thread)

A10	M10 x 1
A14	M14 x 1

❺ Vacuum inlet

			Pad diameter	
			ø10 to ø32	ø40, ø50 (10 st only)
04	ø4	One-touch fitting	KQ2H04-M5N	
06	ø6		KQ2H06-M5N	KQ2H06-01NS
08	ø8			KQ2H08-01NS
N6	For ø6 nylon tubing	Barb fitting		
U6	For ø6 soft tubing			

Vacuum inlet: Built-in One-touch fitting
Pad diameter: ø40, ø50 (Buffer stroke: 20 to 50 st)

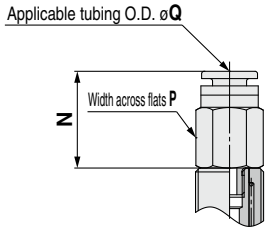

Vacuum inlet: Barb fitting

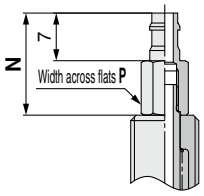

Dimensions Per Vacuum Inlet: One-touch Fitting

Model									N	P	Q	Fitting part min. hole size
	Vacuum inlet direction	❶ Pad dia.	Form	❷ *1 Material	❸ Buffer spec.	❹ Buffer stroke	❺ Vacuum inlet	❻ Connection thread				
ZP	T	10, 13, 16, 20, 25, 32	C	N, S, U, F, GN, GS	J, K	10, 20, 30, 40, 50	04	A10	27.7	8	4	ø2.5
							06			10	6	
		40, 50				10	06	A14	31.8	10	6	ø4.5
							08		35.9	14	8	ø6
						20, 30, 50	06		19.9	12	6	ø3
							08		24.9	14	8	

Dimensions Per Vacuum Inlet: Barb Fitting

Model									N	P	Fitting part min. hole size
	Vacuum inlet direction	❶ Pad dia.	Form	❷ *1 Material	❸ Buffer spec.	❹ Buffer stroke	❺ Vacuum inlet	❻ Connection thread			
ZP	T	10, 13, 16, 20, 25, 32	C	N, S, U, F, GN, GS	J, K	10, 20, 30, 40, 50	N6	A10	15	6	ø2.5
							U6				
		40, 50				10	N6	A14	19	10	
							U6				
						20, 30, 50	N6		12		
							U6				

*1 N: NBR, S: Silicone rubber, U: Urethane rubber, F: FKM, GN: Conductive NBR, GS: Conductive silicone rubber

Construction	p. 118
Buffer Assembly	p. 124

Dimensions/Models

With buffer/One-touch fitting ø10 to ø50

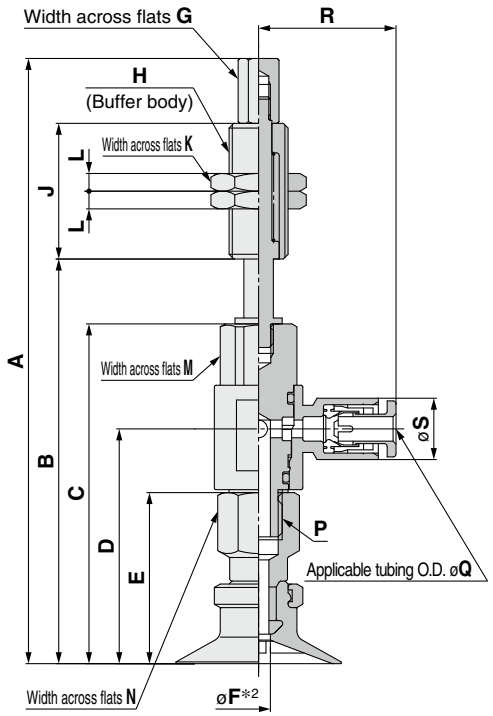

Construction	p. 118
Buffer Assembly	p. 125

ZPR 10 C N J 10 – 04 – A10
❶ ❷ ❸ ❹ ❺ ❻

❸ Buffer specification

J	Rotating
K	Non-rotating

❻ Connection thread (Male thread)

A10	M10 x 1
A14	M14 x 1

❺ Vacuum inlet (One-touch fitting)

04	ø4
06	ø6
08	ø8

Model									A	B	C	D	E	*2 F	G	H	J	K	L	M	N	P
	Vacuum inlet direction	❶ Pad dia.	Form	❷ *1 Material	❸ Buffer spec.	❹ Buffer stroke	❺ Vacuum inlet	❻ Connection thread														
ZP	R	10 13	C	N S U F GN GS	J K	10	04 06	A10	91	57	46	29.9	21	2.5	6	M10 x 1	23	14	3	10	8	M5 x 0.8
						20			129	67							51					
						30			139	77							77					
						40			175	87												
						50			185	97												
		16				10			91.5	57.5	46.5	30.4	21.5				23					
						20			129.5	67.5							51					
						30			139.5	77.5							77					
						40			175.5	87.5												
						50		A10	185.5	97.5												
		20 25				10	04 06 08		102.6	68.6	57.6	39.8	29	3.5			23			12	12	M8 x 1.25
						20			140.6	78.6							51					
						30			150.6	88.6							77					
						40			186.6	98.6												
						50			196.6	108.6												
		32				10			103.1	69.1	58.1	40.3	29.5				23					
						20			141.1	79.1							51					
						30			151.1	89.1												
						40			187.1	99.1							77					
						50			197.1	109.6												
		40				10	06 08	A14	140.6	72.6	60.6	42.8	32	4	10	M14 x 1	50	19	5	12	12	M8 x 1.25
						20			137.6	82.6												
						30			147.6	92.6							75					
						50			192.6	112.6												
		50				10			141.6	73.6	61.6	43.8	33				50					
						20			138.6	83.6												
						30			148.6	93.6							75					
						50			193.6	113.6												

Dimensions Per Vacuum Inlet

Model									Q	R	S	Fitting part min. hole size
	Vacuum inlet direction	❶ Pad dia.	Form	❷ *1 Material	❸ Buffer spec.	❹ Buffer stroke	❺ Vacuum inlet	❻ Connection thread				
ZP	R	10 13 16	C	N S U F GN GS	J K	10 20 30 40 50	04	A10	4	20.6	10.4	ø3
							06		6	21.6	12.8	ø4
		20 25 32				10 20 30 40 50	04		4	23.3	10.4	ø3
							06		6	24.3	12.8	ø4.5
							08		8	26.2	15.2	ø6
		40 50				10 20 30 50	06	A14	6	24.3	12.8	ø4.5
							08		8	26.2	15.2	ø6

*1 N: NBR, S: Silicone rubber, U: Urethane rubber, F: FKM, GN: Conductive NBR, GS: Conductive silicone rubber

*2 Indicates the minimum hole size of the adapter or vacuum pad

Dimensions/Models

With buffer/barb fitting ø10 to ø50

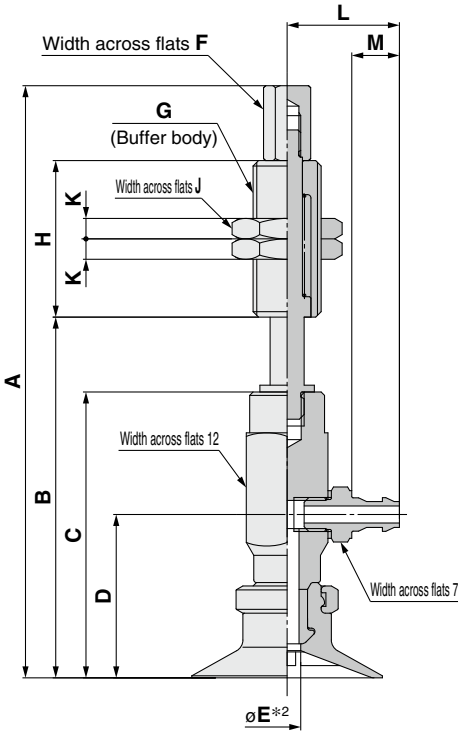

Construction	p. 118
Buffer Assembly	p. 126

ZPY 10 C N J 10 – N4 – A10
❶ ❷ ❸ ❹ ❺ ❻

❸ Buffer specification

J	Rotating
K	Non-rotating

❻ Connection thread (Male thread)

A10	M10 x 1
A14	M14 x 1

❺ Vacuum inlet (Barb fitting)

N4	For ø4 nylon tubing	M-5AN-4
N6	For ø6 nylon tubing	M-5AN-6
U4	For ø4 soft tubing	M-5AU-4
U6	For ø6 soft tubing	M-5AU-6

Model									A	B	C	D	*2 E	F	G	H	J	K
	Vacuum inlet direction	❶ Pad dia.	Form	❷ *1 Material	❸ Buffer spec.	❹ Buffer stroke	❺ Vacuum inlet	❻ Connection thread										
ZP	Y	10, 13	C	N, S, U, F, GN, GS	J, K	10	N4, N6, U4, U6	A10	83	49	38	22	2.5	6	M10 x 1	23	14	3
						20			121	59						51		
						30			131	69						77		
						40			167	79								
						50			177	89								
		16				10			83.5	49.5	38.5	22.5				23		
						20			121.5	59.5						51		
						30			131.5	69.5						77		
						40			167.5	79.5								
						50			177.5	89.5								
		20, 25				10			87	53	42	24	3.5	6	M10 x 1	23	14	3
						20			125	63						51		
						30			135	73						77		
						40			171	83								
						50			181	93								
		32				10			87.5	53.5	42.5	24.5				23		
						20			125.5	63.5						51		
						30			135.5	73.5						77		
						40			171.5	83.5								
						50			181.5	93.5								
		40				10	N6, U6	A14	126.5	58.5	46.5	28.5	6	10	M14 x 1	50	19	5
						20			123.5	68.5								
						30			133.5	78.5								
						50			178.5	98.5						75		
		50				10			127.5	59.5	47.5	29.5				50		
						20			124.5	69.5								
						30			134.5	79.5								
						50			179.5	99.5						75		

Dimensions Per Vacuum Inlet

Model									L	M	Fitting part min. hole size
	Vacuum inlet direction	❶ Pad dia.	Form	❷ *1 Material	❸ Buffer spec.	❹ Buffer stroke	❺ Vacuum inlet	❻ Connection thread			
ZP	Y	10, 13, 16, 20, 25, 32	C	N, S, U, F, GN, GS	J, K	10, 20, 30, 40, 50	N4, U4	A10	14.5	5	ø1.8
							N6, U6		16.5	7	ø2.5
		40, 50					N6, U6	A14	16.5	7	ø2.5

*1 N: NBR, S: Silicone rubber, U: Urethane rubber, F: FKM, GN: Conductive NBR, GS: Conductive silicone rubber

*2 Indicates the minimum hole size of the adapter or vacuum pad

Basic Pad
Flat Type Ball Joint Type
ZP Series



How to Order

		Dimensions/ Models	Construction	Mounting Bracket Assembly
Pad unit	ZP 10 F N	p. 62	p. 119	From p. 127
With adapter	ZP T 10 F N – B5 – A8	From p. 62	p. 119	From p. 127
With buffer	ZP T 10 F N J 10 – B5 – A10	From p. 65	p. 120	From p. 129

∗ Pad unit's sales unit: 10 pcs.

❶ ❷ ❸ ❹ ❺ ❻ ❼

● Ball joint type

❶ Vacuum inlet direction

T	Vertical
R	Lateral (With One-touch fitting)

❷ Pad diameter

10	ø10
13	ø13
16	ø16
20	ø20
25	ø25
32	ø32
40	ø40
50	ø50

❺ Buffer stroke

Stroke [mm]	Pad diameter [mm]	
	ø10 to ø16	ø20 to ø50
10	●	●
20	●	●
30	●	●
40	●	—
50	●	●

❸ Material

N	NBR
S	Silicone rubber∗1
U	Urethane rubber
F	FKM
GN	Conductive NBR
GS	Conductive silicone rubber

❹ Buffer specification

J	Rotating
K	Non-rotating

∗1 Compliant with the FDA (USA Food and Drug Administration) regulation 21CFR§177.2600 for "Rubber articles intended for repeated use"

With adapter

❻ Vacuum inlet/ ❼ Connection thread

○: ZPT/Vertical ●: ZPR/Lateral (With One-touch fitting)

❻ Vacuum inlet			❼ Connection thread			Pad diameter [mm]		
Type	Symbol	Size	Type	Symbol	Size	ø10 to ø16	ø20 to ø32	ø40, ø50
Female thread	B5	M5 x 0.8	Male thread	A8	M8 x 1	○	—	—
				A10	M10 x 1	—	○	—
				A14	M14 x 1	—	—	○
—	Nil	—∗1	Female thread	B5	M5 x 0.8	○	○	—
				B8	M8 x 1.25	—	○	○
				B01	Rc1/8	—	○	○
				N01	NPT1/8	—	○	○
				T01	NPTF1/8	—	○	○
One-touch fitting	04	ø4		B5	M5 x 0.8	●	—	—
	06	ø6				●	●	●
				B8	M8 x 1.25	—	●	●
	08	ø8		B5	M5 x 0.8	—	●	●
				B8	M8 x 1.25	—	●	●

∗1 Use the connection thread.

With buffer

❻ Vacuum inlet

○: ZPT/Vertical ●: ZPR/Lateral (With One-touch fitting)

Type	Symbol	Size	Pad diameter [mm]		
			ø10 to ø16	ø20 to ø32	ø40, ø50
Female thread	B5	M5 x 0.8	○	—	—
	B01	Rc1/8	—	○	○
	N01	NPT1/8	—	○	○
	T01	NPTF1/8	—	○	○
One-touch fitting	04	ø4	○●	—	—
	06	ø6	○●	○●	○●
	08	ø8	—	○●	○●

❼ Connection thread ○: ZPT/Vertical ●: ZPR/Lateral

Type	Symbol	Size	Pad diameter [mm]		
			ø10 to ø16	ø20 to ø32	ø40, ø50
Male thread	A10	M10 x 1	○●	—	—
	A14	M14 x 1	—	○●	○●

Lock ring unit

Part no.	Pad diameter [mm]
ZPLF	ø40, ø50

∗ The mounting nut and fitting are shipped together but do not come assembled.

Dimensions/Models

Single unit ø10 to ø50

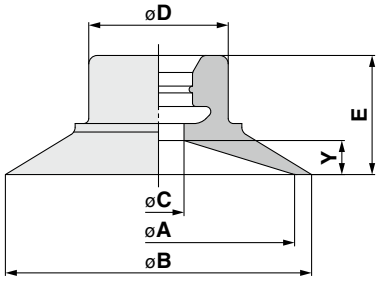

Construction	p. 119
Mounting Bracket Assembly	From p. 127

ZP 10 F N
❶ ❷

Model ❶ Pad dia.	Form	❷ *1 Material	A	B	C	D	E	Y
10	F	N S U F GN GS	10	12	3	8.2	6.5	1.5
13			13	15			7	2
16			16	18				
20			20	22	4	10.2	8.5	3
25			25	28				
32			32	35			9	
40			40	43	10	26	13	5
50			50	53	8		14	6

*1 N: NBR, S: Silicone rubber, U: Urethane rubber, F: FKM, GN: Conductive NBR, GS: Conductive silicone rubber

With adapter ø10 to ø50

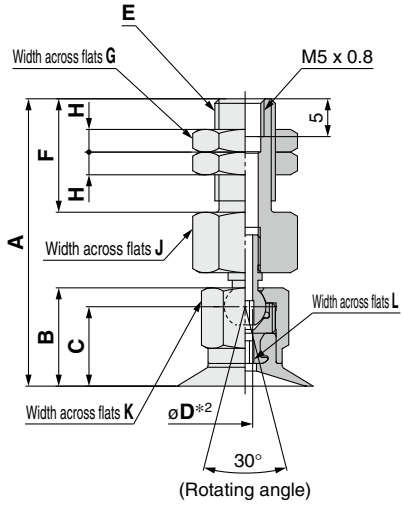

ø10 to ø32

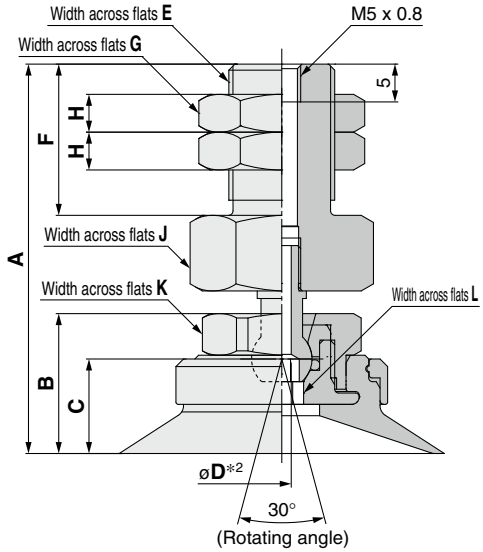

ø40, ø50

ZPT 10 F N - B5 - A8
❶ ❷ ❸ ❹

❸ **Vacuum inlet (Female thread)**

B5	M5 x 0.8

❹ **Connection thread (Male thread)**

A8	M8 x 1
A10	M10 x 1
A14	M14 x 1

Model: Vacuum inlet direction	❶ Pad dia.	Form	❷ *1 Material	❸ Vacuum inlet	❹ Connection thread	A	B	C	*2 D	E	F	G	H	J	K	L
T	10	F	N S U F GN GS	B5	A8	37.5	12.5	10	2	M8 x 1	15	12	3	12	10	2
	13					38	13	10.5								
	16															
	20				A10	48.5	15.5	12.5	2	M10 x 1	20	14	3	16	12	3
	25															
	32					49	16	13								
	40				A14	51.5	18.5	12.5	2.5	M14 x 1	20	19	5	21	19	5
	50					52.5	19.5	13.5								

*1 N: NBR, S: Silicone rubber, U: Urethane rubber, F: FKM, GN: Conductive NBR, GS: Conductive silicone rubber
*2 Indicates the minimum hole size of the adapter or vacuum pad

Construction	p. 119
Adapter Assembly	p. 127

Dimensions/Models

With adapter ø10 to ø50

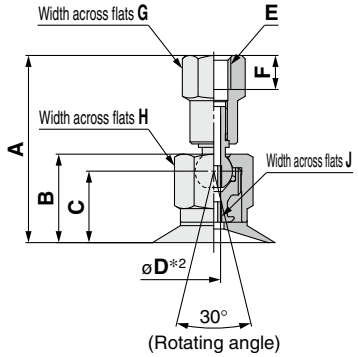

(Rotating angle)

ø10 to ø32

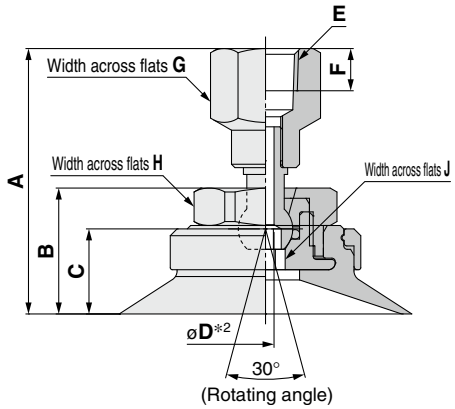

(Rotating angle)

ø40, ø50

ZPT 10 F N – B5
❶ ❷ ❸

❸ Vacuum inlet (Female thread)

B5	M5 x 0.8
B8	M8 x 1.25
B01	Rc1/8
N01	NPT1/8
T01	NPTF1/8

Model						A	B	C	D*2	E	F	G	H	J
	Vacuum inlet direction	❶ Pad dia.	Form	❷ *1 Material	❸ Vacuum inlet									
ZP	T	10	F	N S U F GN GS	B5	27	12.5	10	2	M5 x 0.8	5	8	10	2
		13 16				27.5	13	10.5						
		20 25				32	15.5	12.5				9	12	3
		32				32.5	16	13						
		20 25			B8	36	15.5	12.5	2	M8 x 1.25	8	12	12	3
		32				36.5	16	13						
		40				39	18.5	12.5	2.5				19	5
		50				40	19.5	13.5						
		20 25			B01 N01 T01	36	15.5	12.5	2	Rc1/8 NPT1/8 NPTF1/8		14	12	3
		32				36.5	16	13						
		40				39	18.5	12.5	2.5				19	5
		50				40	19.5	13.5						

*1 N: NBR, S: Silicone rubber, U: Urethane rubber, F: FKM, GN: Conductive NBR, GS: Conductive silicone rubber
*2 Indicates the minimum hole size of the adapter or vacuum pad

Construction	p. 119
Adapter Assembly	p. 127

Dimensions/Models

With adapter/One-touch fitting ø10 to ø50

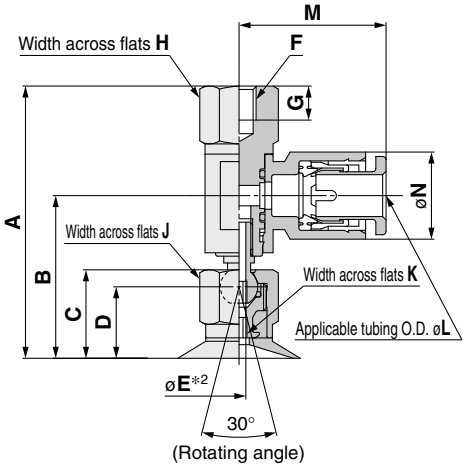

(Rotating angle)

ø10 to ø32

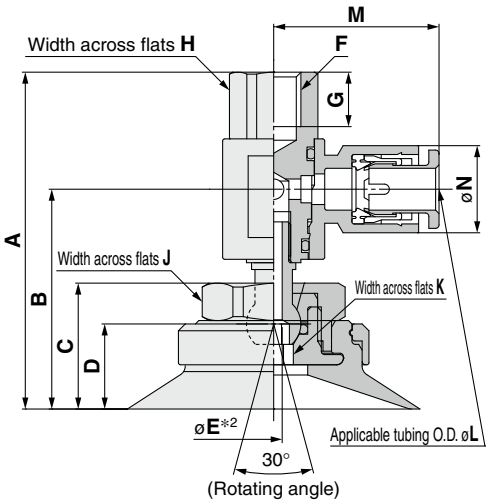

(Rotating angle)

ø40, ø50

ZPR 10 F N - 04 - B5
❶ ❷ ❸ ❹

❸ Vacuum inlet (One-touch fitting)

04	ø4
06	ø6
08	ø8

❹ Connection thread (Female thread)

B5	M5 x 0.8
B8	M8 x 1.25

Model							A	B	C	D	*2 E	F	G	H	J	K
Vacuum inlet direction		❶ Pad dia.	Form	❷ *1 Material	❸ Vacuum inlet	❹ Connection thread										
ZP	R	10	F	N S U F GN GS	04 06 08	B5	39.5	23.4	12.5	10	2	M5 x 0.8	5	10	10	2
		13 16					40	23.9	13	10.5						
		20 25					46.5	29.3	15.5	12.5			8	12	12	3
		32					47	29.8	16	13						
		40					49.5	32.3	18.5	12.5	2.5				19	5
		50					50.5	33.3	19.5	13.5						
		20 25				B8	46.5	29.3	15.5	12.5	2	M8 x 1.25	8	12	12	3
		32					47	29.8	16	13						
		40					49.5	32.3	18.5	12.5	2.5				19	5
		50					50.5	33.3	19.5	13.5						

Dimensions Per Vacuum Inlet

Model							L	M	N	Fitting part min. hole size
Vacuum inlet direction		❶ Pad dia.	Form	❷ *1 Material	❸ Vacuum inlet	❹ Connection thread				
ZP	R	10 13 16	F	N S U F GN GS	04	B5	4	20.6	10.4	ø3
					06		6	21.6	12.8	ø4
		20 25 32 40 50			06	B5 B8	6	24.3	12.8	ø4.5
					08		8	26.2	15.2	ø6

*1 N: NBR, S: Silicone rubber, U: Urethane rubber, F: FKM, GN: Conductive NBR, GS: Conductive silicone rubber
*2 Indicates the minimum hole size of the adapter or vacuum pad

Construction	p. 119
Adapter Assembly	p. 128

Dimensions/Models

With buffer ø10 to ø50

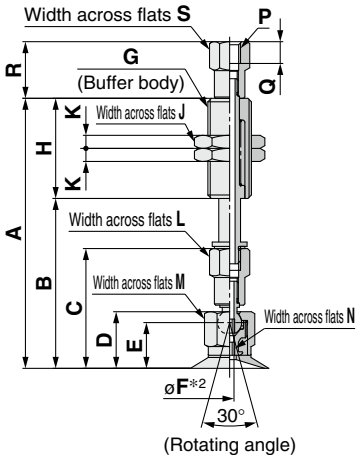

(Rotating angle)

ø10 to ø32

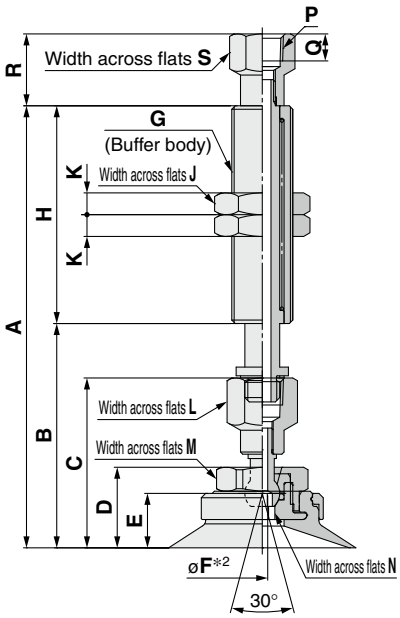

(Rotating angle)

ø40, ø50

ZPT 10 F N J 10 – B5 – A10

❶ ❷ ❸ ❹ ❺ ❻

❸ Buffer specification

J	Rotating
K	Non-rotating

❻ Connection thread (Male thread)

A10	M10 x 1
A14	M14 x 1

❺ Vacuum inlet

			Pad diameter	
			ø10 to ø16	ø20 to ø50 (10 st only)
B5	M5 x 0.8	Female thread		
B01	Rc1/8			
N01	NPT1/8			
T01	NPTF1/8			
04	ø4	One-touch fitting	KQ2H04-M5N	
06	ø6		KQ2H06-M5N	KQ2H06-01NS
08	ø8			KQ2H08-01NS

Model																												
	Vacuum inlet direction	❶ Pad dia.	Form	❷ *1 Material	❸ Buffer spec.	❹ Buffer stroke	❺ Vacuum inlet	❻ Connection thread	A	B	C	D	E	*2 F	G	H	J	K	L	M	N	P	Q	R	S
ZP	T	10	F	N S U F GN GS	J K	10	B5	A10	61.5	38.5	27	12.5	10	2	M10 x 1	23	14	3	8	10	2	M5 x 0.8	5	13	8
						20			99.5	48.5						51									
						30			109.5	58.5															
						40			145.5	68.5						77									
						50			155.5	78.5															
		13 16				10			62	39	27.5	13	10.5			23									
						20			100	49						51									
						30			110	59															
						40			146	69						77									
						50			156	79															
		20 25				10	B01 N01 T01	A14	98.5	48.5	36	15.5	12.5	2	M14 x 1	50	19	5	12	12	3	Rc1/8 NPT1/8 NPTF1/8	16.5	13	
						20			108.5	58.5													12		
						30			118.5	68.5						75							16.5		
						50			163.5	88.5															
		32				10			99	49	36.5	16	13			50							12		
						20			109	59															
						30			119	69						75							16.5		
						50			164	89															
		40				10			101.5	51.5	39	18.5	12.5	2.5		50					19	5	12		
						20			111.5	61.5															
						30			121.5	71.5						75							16.5		
						50			166.5	91.5															
		50				10			102.5	52.5	40	19.5	13.5			50							12		
						20			112.5	62.5															
						30			122.5	72.5						75							16.5		
						50			167.5	92.5															

Vacuum inlet: One-touch fitting

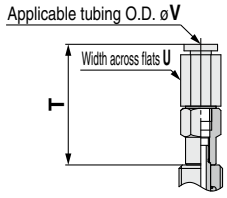

Vacuum inlet: Built-in One-touch fitting
Pad diameter: ø20 to ø50 (Buffer stroke: 20 to 50 st)

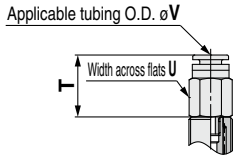

Dimensions Per Vacuum Inlet: One-touch Fitting

Model									T	U	V	Fitting part min. hole size
	Vacuum inlet direction	❶ Pad dia.	Form	❷ *1 Material	❸ Buffer spec.	❹ Buffer stroke	❺ Vacuum inlet	❻ Connection thread				
ZP	T	10 13 16	F	N S U F GN GS	J K	10 20 30 40 50	04	A10	27.7	8	4	ø2.5
							06			10	6	
		20 25 32 40 50				10	06	A14	31.8	10	6	ø4.5
							08		35.9	14	8	ø6
						20 30 50	06		19.9	12	6	ø3
							08		24.9	14	8	

*1 N: NBR, S: Silicone rubber, U: Urethane rubber, F: FKM, GN: Conductive NBR, GS: Conductive silicone rubber

*2 Indicates the minimum hole size of the adapter or vacuum pad

Construction	p. 120
Buffer Assembly	p. 129

Dimensions/Models

With buffer/One-touch fitting ø10 to ø50

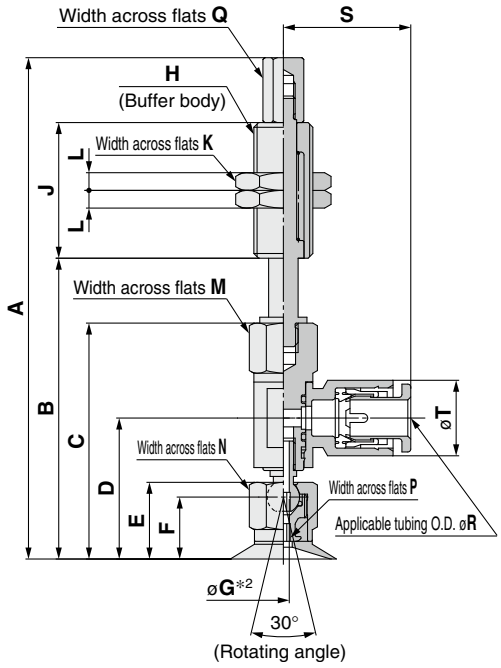

ø10 to ø32

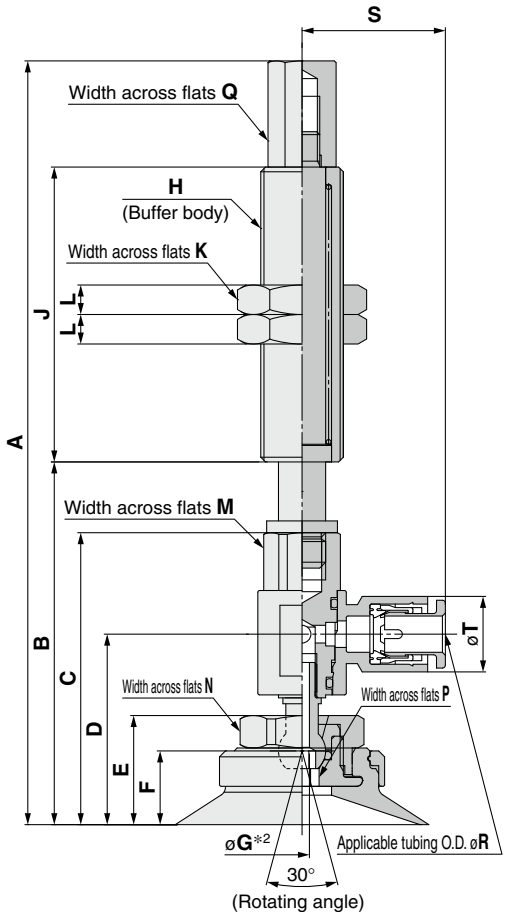

ø40, ø50

ZPR 10 F N J 10 - 04 - A10
❶ ❷ ❸ ❹ ❺ ❻

❸ Buffer specification

J	Rotating
K	Non-rotating

❻ Connection thread (Male thread)

A10	M10 x 1
A14	M14 x 1

❺ Vacuum inlet (One-touch fitting)

04	ø4
06	ø6
08	ø8

Model									A	B	C	D	E	F	*2 G	H	J	K	L	M	N	P	Q
	Vacuum inlet direction	❶ Pad dia.	Form	❷ *1 Material	❸ Buffer spec.	❹ Buffer stroke	❺ Vacuum inlet	❻ Connection thread															
ZP	R	10	F	NSUFGNGS	J K	10	04 06	A10	84.5	50.5	39.5	23.4	12.5	10	2	M10 x 1	23	14	3	10	10	2	6
						20			122.5	60.5							51						
						30			132.5	70.5													
						40			168.5	80.5							77						
						50			178.5	90.5													
		13 16				10			85	51	40	23.9	13	10.5			23						
						20			123	61							51						
						30			133	71													
						40			169	81							77						
						50			179	91													
		20 25				10	06 08		126.5	58.5	46.5	29.3	15.5	12.5			50						
						20			123.5	68.5													
						30			133.5	78.5													
						50			178.5	98.5							75						
		32				10			127	59	47	29.8	16	13			50						
						20			124	69													
						30			134	79													
						50			179	99							75						
		40				10			129.5	61.5	49.5	32.3	18.5	12.5	2.5		50						
						20			126.5	71.5													
						30			136.5	81.5													
						50			181.5	101.5							75						
		50				10			130.5	62.5	50.5	33.3	19.5	13.5			50						
						20			127.5	72.5													
						30			137.5	82.5													
						50			182.5	102.5							75						

Dimensions Per Vacuum Inlet: One-touch Fitting

Model									R	S	T	Fitting part min. hole size
	Vacuum inlet direction	❶ Pad dia.	Form	❷ *1 Material	❸ Buffer spec.	❹ Buffer stroke	❺ Vacuum inlet	❻ Connection thread				
ZP	R	10 13 16	F	NSUFGNGS	J K	10 20 30 40 50	04	A10	4	20.6	10.4	ø3
							06		6	21.6	12.8	ø4
		20 25 32 40 50				10	06	A14	6	24.3	12.8	ø4.5
							08		8	26.2	15.2	ø6
						20 30 50	06		6	24.3	12.8	ø4.5
							08		8	26.2	15.2	ø6

*1 N: NBR, S: Silicone rubber, U: Urethane rubber, F: FKM, GN: Conductive NBR, GS: Conductive silicone rubber

*2 Indicates the minimum hole size of the adapter or vacuum pad

Construction	p. 120
Buffer Assembly	p. 130



Basic Pad
Bellows Type
ZP Series



How to Order

																			Dimensions/ Models	Construction	Mounting Bracket Assembly
Pad unit	ZP		06	B	N										–				p. **68**	p. **115** p. **117**	From p. **121**
With adapter	ZP	T	06	B	N			–	A5	–									From p. **69**	p. **115** p. **117**	From p. **121**
With buffer	ZP	T	06	B	N	J	6	–	B3	–	A8								From p. **79**	p. **116** p. **118**	From p. **124**
		❶	❷		❸	❹	❺		❻		❼				❽						

● Bellows type

∗ Pad unit's sales unit: 10 pcs.

❶ Vacuum inlet direction

Nil	Pad unit
T	Vertical
R	Lateral (With One-touch fitting)
Y	Lateral (With barb fitting)

❷ Pad diameter

06	ø6	**20**	ø20
08	ø8	**25**	ø25
10	ø10	**32**	ø32
13	ø13	**40**	ø40
16	ø16	**50**	ø50

❸ Material

N	NBR
S	Silicone rubber∗1
U	Urethane rubber
F	FKM
GN	Conductive NBR
GS	Conductive silicone rubber

❹ Buffer specification

J	Rotating
K	Non-rotating

❺ Buffer stroke

Stroke [mm]	Pad diameter [mm]									
	ø6	ø8	ø10	ø13	ø16	ø20	ø25	ø32	ø40	ø50
6	●	●	—	—	—	—	—	—	—	—
10	●	●	●	●	●	●	●	●	●	●
15	●	●	—	—	—	—	—	—	—	—
20	—	—	●	●	●	●	●	●	●	●
25	●	●	—	—	—	—	—	—	—	—
30	—	—	●	●	●	●	●	●	●	●
40	—	—	●	●	●	●	●	●	—	—
50	—	—	●	●	●	●	●	●	●	●

∗1 Compliant with the FDA (USA Food and Drug Administration) regulation 21CFR§177.2600 for "Rubber articles intended for repeated use"

With adapter

❻ Vacuum inlet

○: ZPT/Vertical ●: ZPR/Lateral (With One-touch fitting) △: ZPY/Lateral (With barb fitting)

Type	Symbol	Size	Pad diameter [mm]			
			ø6, ø8	ø10 to ø16	ø20 to ø32	ø40, ø50
Male thread	**A5**	M5 x 0.8	○	○	—	—
	A6	M6 x 1	○	○	○	○
	A8	M8 x 1	—	—	○	○
Female thread	**B4**	M4 x 0.7	○	—	—	—
	B5	M5 x 0.8	○	○	○	—
	B6	M6 x 1	—	○	○	○
	B8	M8 x 1.25	—	—	○	○
	B01	Rc1/8	—	○	○	○
	N01	NPT1/8	—	○	○	○
	T01	NPTF1/8	—	○	○	○
One-touch fitting	**04**	ø4	●	●	●	—
	06	ø6	●	●	●	●
	08	ø8	—	—	●	●
Barb fitting	**N4**	For ø4 nylon tubing	△	△	△	—
	N6	For ø6 nylon tubing	△	△	△	△
	U4	For ø4 soft tubing	△	△	△	—
	U6	For ø6 soft tubing	△	△	△	△

❼ Connection thread

●: ZPR/Lateral (With One-touch fitting) △: ZPY/Lateral (With barb fitting)

Type	Symbol	Size	Pad diameter [mm]			
			ø6, ø8	ø10 to ø16	ø20 to ø32	ø40, ø50
Male thread	**A5**	M5 x 0.8	●△	●△	—	—
	A6	M6 x 1	●△	●△	●△	●△
	A8	M8 x 1	—	—	●△	●△
Female thread	**B4**	M4 x 0.7	●△	—	—	—
	B5	M5 x 0.8	●△	●△	●△	—
	B6	M6 x 1	—	●△	●△	●△
	B8	M8 x 1.25	—	—	●△	●△

It is not necessary to select a connection thread for ○: ZPT/Vertical. Use the vacuum inlet.

With buffer

❻ Vacuum inlet

○: ZPT/Vertical ●: ZPR/Lateral (With One-touch fitting) △: ZPY/Lateral (With barb fitting)

Type	Symbol	Size	Pad diameter [mm]			
			ø6, ø8	ø10 to ø16	ø20 to ø32	ø40, ø50
Female thread	**B3**	M3 x 0.5	○	—	—	—
	B5	M5 x 0.8	○	○	○	○
	B01	Rc1/8	—	—	—	○
	N01	NPT1/8	—	—	—	○
	T01	NPTF1/8	—	—	—	○
One-touch fitting	**04**	ø4	○●	○●	○●	—
	06	ø6	○●	○●	○●	○●
	08	ø8	—	—	●	○●
Barb fitting	**N4**	For ø4 nylon tubing∗1	○△	△	△	—
	N6	For ø6 nylon tubing∗1	△	○△	○△	○△
	U4	For ø4 soft tubing∗2	○△	△	△	—
	U6	For ø6 soft tubing∗2	△	○△	○△	○△

∗1 Nylon tube piping ∗2 Soft nylon/Polyurethane tube piping

❼ Connection thread

○: ZPT/Vertical ●: ZPR/Lateral (With One-touch fitting) △: ZPY/Lateral (With barb fitting)

Type	Symbol	Size	Pad diameter [mm]			
			ø6, ø8	ø10 to ø16	ø20 to ø32	ø40, ø50
Male thread	**A8**	M8 x 1	○●△	—	—	—
	A10	M10 x 1	—	○●△	○●△	—
	A14	M14 x 1	—	—	—	○●△

❽ Lock ring

Symbol	Pad diameter [mm]	
	ø6, ø8	ø10 to ø50
Nil	None∗1	With lock ring
X19		Without lock ring

Lock ring unit

Part no.	Pad diameter [mm]
ZPL1	ø10 to ø16
ZPL2	ø20 to ø32
ZPL3	ø40, ø50

∗1 The lock ring cannot be used for pad diameters ø6 and ø8.

∗ The pad, lock ring, mounting nut, fitting, and buffer plate are shipped together but do not come assembled.

Dimensions/Models

Single unit ø6 to ø8

ZP 06 B N
❶ ❷

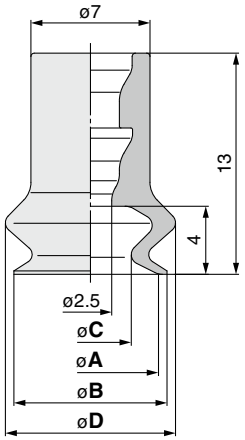

Model				A	B	C	D
	❶ Pad dia.	Form	❷ *1 Material				
ZP	06	B	N S U F GN GS	6	7	3.4	9
	08			8	9	4.8	10

*1 N: NBR, S: Silicone rubber, U: Urethane rubber, F: FKM, GN: Conductive NBR, GS: Conductive silicone rubber

Construction p. 115
Mounting Bracket Assembly From p. 121

Single unit ø10 to ø50

ZP 10 B N
❶ ❷

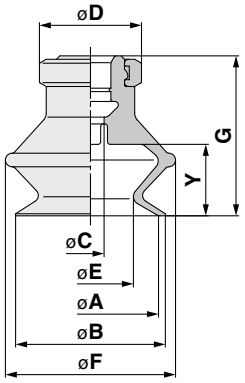

Model				A	B	C	D	E	F	G	Y
	❶ Pad dia.	Form	❷ *1 Material								
ZP	10	B	N S U F GN GS	10	12	4	13	5.5	13.5	16	5.5
	13			13	15			8.7	19	18.5	7.5
	16			16	18			10	21	20	8.5
	20			20	22		15	12.6	25	23.5	10.5
	25			25	27			16	28	24	
	32			32	34			18.9	37	29	14
	40			40	43	7	18	24.4	47	34	16
	50			50	53			33.4	57	38	19

*1 N: NBR, S: Silicone rubber, U: Urethane rubber, F: FKM, GN: Conductive NBR, GS: Conductive silicone rubber

Construction p. 117
Mounting Bracket Assembly From p. 121

Dimensions/Models

With adapter ø6 to ø8

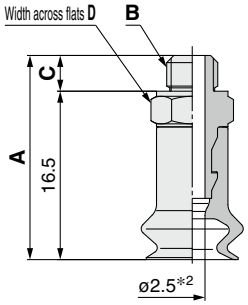

Construction	p. 115
Adapter Assembly	p. 121

ZPT 06 B N - A5
❶ ❷ ❸

❸ **Vacuum inlet (Male thread)**

A5	M5 x 0.8
A6	M6 x 1

Model						A	B	C	D
	Vacuum inlet direction	❶ Pad dia.	Form	❷ *1 Material	❸ Vacuum inlet				
ZP	T	06 08	B	N S U F GN GS	A5	20	M5 x 0.8	3.5	7
					A6	21	M6 x 1	4.5	8

*1 N: NBR, S: Silicone rubber, U: Urethane rubber, F: FKM, GN: Conductive NBR, GS: Conductive silicone rubber
*2 Indicates the minimum hole size of the adapter or vacuum pad

With adapter ø10 to ø50

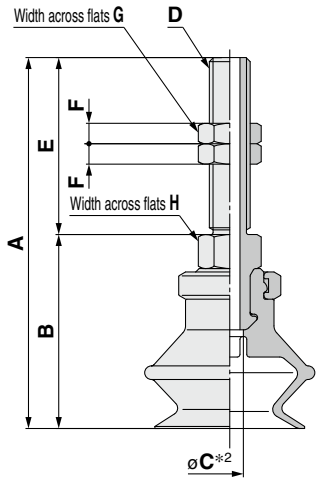

Construction	p. 117
Adapter Assembly	p. 121

ZPT 10 B N - A5
❶ ❷ ❸

❸ **Vacuum inlet (Male thread)**

A5	M5 x 0.8
A6	M6 x 1
A8	M8 x 1

Model						A	B	C*2	D	E	F	G	H
	Vacuum inlet direction	❶ Pad dia.	Form	❷ *1 Material	❸ Vacuum inlet								
ZP	T	10	B	N S U F GN GS	A5	42	21	2.5	M5 x 0.8	21	4	8	8
		13				44.5	23.5						
		16				46	25						
		10			A6	47	21	2.5	M6 x 1	26	3	8	8
		13				49.5	23.5						
		16				51	25						
		20				54.5	28.5	3					12
		25				55	29						
		32				60	34						
		40				66	40						
		50				70	44						
		20			A8	49.5	33.5	3.5	M8 x 1	16	3	12	12
		25				50	34						
		32				55	39						
		40				56	40	4.5					
		50				60	44						

*1 N: NBR, S: Silicone rubber, U: Urethane rubber, F: FKM, GN: Conductive NBR, GS: Conductive silicone rubber
*2 Indicates the minimum hole size of the adapter or vacuum pad

Recommended Gasket Part Nos.

Part no.	**D** vacuum inlet (Male thread)
WCS5X0.8	M5 x 0.8
WCS6X1	M6 x 1
WCS8X1	M8 x 1

Dimensions/Models

With adapter ø6 to ø8

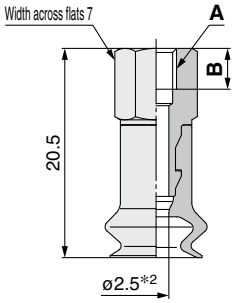

Construction	p. 115
Adapter Assembly	p. 121

ZPT 06 B N - B4
❶ ❷ ❸

❸ Vacuum inlet (Female thread)

B4	M4 x 0.7
B5	M5 x 0.8

Model						A	B
	Vacuum inlet direction	❶ Pad dia.	Form	❷ *1 Material	❸ Vacuum inlet		
ZP	T	06 08	B	N S U F GN GS	B4	M4 x 0.7	4
					B5	M5 x 0.8	5

*1 N: NBR, S: Silicone rubber, U: Urethane rubber, F: FKM, GN: Conductive NBR, GS: Conductive silicone rubber
*2 Indicates the minimum hole size of the adapter or vacuum pad

With adapter ø10 to ø50

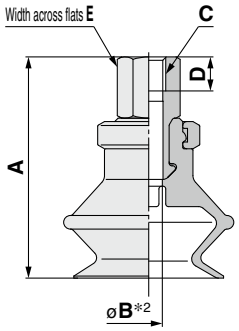

Construction	p. 117
Adapter Assembly	p. 121

ZPT 10 B N - B5
❶ ❷ ❸

❸ Vacuum inlet (Female thread)

B5	M5 x 0.8
B6	M6 x 1
B8	M8 x 1.25
N01	NPT1/8
T01	NPTF1/8

Model						A	B*2	C	D	E
	Vacuum inlet direction	❶ Pad dia.	Form	❷ *1 Material	❸ Vacuum inlet					
ZP	T	10	B	N S U F GN GS	B5	25	2.5	M5 x 0.8	5	8
		13				27.5				
		16				29				
		20				32.5	4			
		25				33				
		32				38				
		10			B6	25	2.5	M6 x 1	6	8
		13				27.5				
		16				29				
		20				32.5	4			
		25				33				
		32				38				
		40				47.5	4.9			12
		50				51.5				
		20			B8	38.5	3.5	M8 x 1.25	8	12
		25				39				
		32				44				
		40				47.5	6.6			
		50				51.5				
		10			B01 N01 T01	31	2.5	Rc1/8 NPT1/8 NPTF1/8	—	12
		13				33.5				
		16				35				
		20				38.5	3.5			
		25				39				
		32				44				
		40				47.5	7			
		50				51.5				

*1 N: NBR, S: Silicone rubber, U: Urethane rubber, F: FKM, GN: Conductive NBR, GS: Conductive silicone rubber
*2 Indicates the minimum hole size of the adapter or vacuum pad

Dimensions/Models

With adapter/One-touch fitting ø6 to ø8

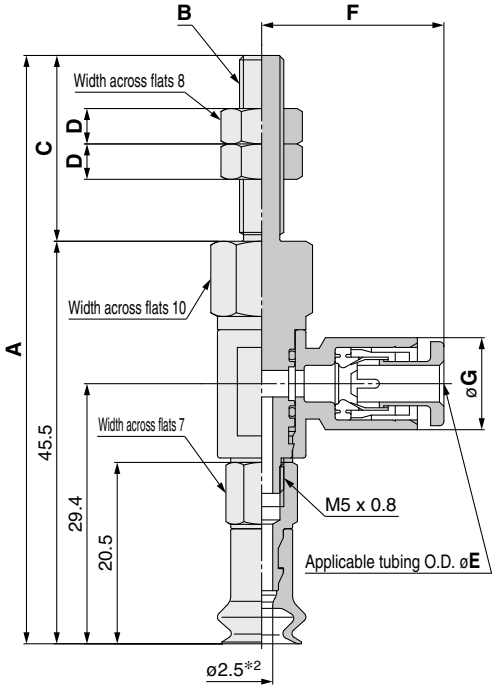

Construction	p. 115
Adapter Assembly	p. 122

ZPR 06 B N – 04 – A5
❶ ❷ ❸ ❹

❸ **Vacuum inlet (One-touch fitting)**

04	ø4
06	ø6

❹ **Connection thread (Male thread)**

A5	M5 x 0.8
A6	M6 x 1

Model							A	B	C	D	Fitting part min. hole size
	Vacuum inlet direction	❶ Pad dia.	Form	❷ Material *1	❸ Vacuum inlet	❹ Connection thread					
ZP	R	06 08	B	N S U F GN GS	04 06	A5	66.5	M5 x 0.8	21	4	ø3
						A6	71.5	M6 x 1	26	3	ø4

Dimensions Per Vacuum Inlet

Model							E	F	G
	Vacuum inlet direction	❶ Pad dia.	Form	❷ Material *1	❸ Vacuum inlet	❹ Connection thread			
ZP	R	06 08	B	N S U F GN GS	04	A5 A6	4	20.6	10.4
					06		6	21.6	12.8

*1 N: NBR, S: Silicone rubber, U: Urethane rubber, F: FKM, GN: Conductive NBR, GS: Conductive silicone rubber

*2 Indicates the minimum hole size of the adapter or vacuum pad

Dimensions/Models

With adapter/One-touch fitting ø10 to ø50

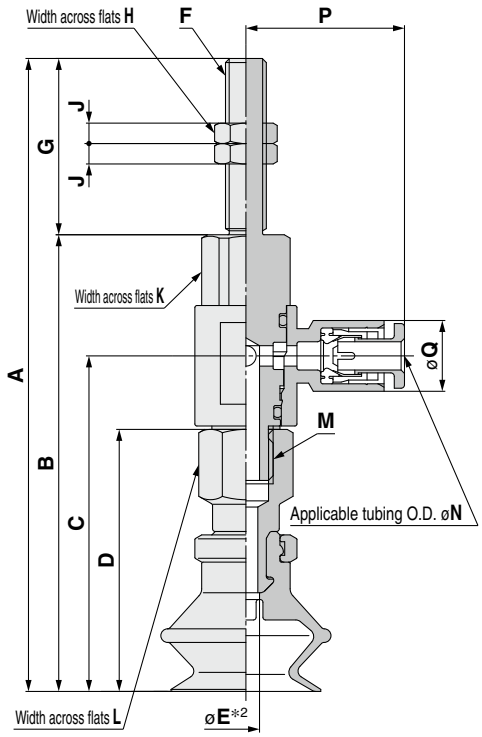

Construction	p. 117
Adapter Assembly	p. 122

ZPR 10 B N – 04 – A5

❶ ❷ ❸ ❹

❸ **Vacuum inlet (One-touch fitting)**

04	ø4
06	ø6
08	ø8

❹ **Connection thread (Male thread)**

A5	M5 x 0.8
A6	M6 x 1
A8	M8 x 1

Model							A	B	C	D	*2 E	F	G	H	J	K	L	M
Vacuum inlet direction		❶ Pad dia.	Form	❷ *1 Material	❸ Vacuum inlet	❹ Connection thread												
ZP	R	10	B	N S U F GN GS	04 06 08	A5	71	50	33.9	25	2.5	M5 x 0.8	21	8	4	10	8	M5 x 0.8
		13					73.5	52.5	36.4	27.5								
		16					75	54	37.9	29								
		10				A6	76	50	33.9	25	2.5	M6 x 1	26	8	3	10	8	M5 x 0.8
		13					78.5	52.5	36.4	27.5								
		16					80	54	37.9	29								
		20					93	67.1	49.3	38.5	3.5		25.9			12	12	M8 x 1.25
		25					93.5	67.6	49.8	39								
		32					98.5	72.6	54.8	44								
		40					102	76.1	58.3	47.5	4							
		50					106	80.1	62.3	51.5								
		20				A8	83	67.1	49.3	38.5	3.5	M8 x 1	15.9	12	3	12	12	M8 x 1.25
		25					83.5	67.6	49.8	39								
		32					88.5	72.6	54.8	44								
		40					92	76.1	58.3	47.5	4							
		50					96	80.1	62.3	51.5								

Dimensions Per Vacuum Inlet

Model							N	P	Q	Fitting part min. hole size
Vacuum inlet direction		❶ Pad dia.	Form	❷ *1 Material	❸ Vacuum inlet	❹ Connection thread				
ZP	R	10 13 16	B	N S U F GN GS	04	A5 A6	4	20.6	10.4	ø3
					06		6	21.6	12.8	ø4
		20 25 32			04	A6 A8	4	23.3	10.4	ø3
					06		6	24.3	12.8	ø4.5
					08		8	26.2	15.2	ø6
		40 50			06	A6 A8	6	24.3	12.8	ø4.5
					08		8	26.2	15.2	ø6

*1 N: NBR, S: Silicone rubber, U: Urethane rubber, F: FKM, GN: Conductive NBR, GS: Conductive silicone rubber

*2 Indicates the minimum hole size of the adapter or vacuum pad

Dimensions/Models

With adapter/One-touch fitting ø6 to ø8

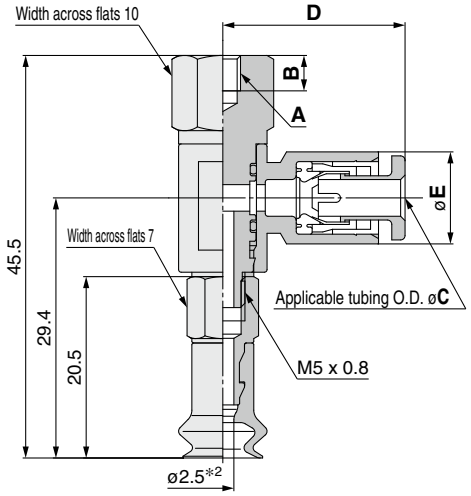

Construction	p. 115
Adapter Assembly	p. 122

ZPR 06 B N – 04 – B4
❶ ❷ ❸ ❹

❸ **Vacuum inlet (One-touch fitting)**

04	ø4
06	ø6

❹ **Connection thread (Female thread)**

B4	M4 x 0.7
B5	M5 x 0.8

Model							A	B
	Vacuum inlet direction	❶ Pad dia.	Form	❷ Material *1	❸ Vacuum inlet	❹ Connection thread		
ZP	**R**	**06 08**	**B**	**N S U F GN GS**	**04 06**	**B4**	M4 x 0.7	4
						B5	M5 x 0.8	5

Dimensions Per Vacuum Inlet

Model							C	D	E	Fitting part min. hole size
	Vacuum inlet direction	❶ Pad dia.	Form	❷ Material *1	❸ Vacuum inlet	❹ Connection thread				
ZP	**R**	**06 08**	**B**	**N S U F GN GS**	**04**	**B4 B5**	4	20.6	10.4	ø3
					06		6	21.6	12.8	ø4

*1 N: NBR, S: Silicone rubber, U: Urethane rubber, F: FKM, GN: Conductive NBR, GS: Conductive silicone rubber
*2 Indicates the minimum hole size of the adapter or vacuum pad

Dimensions/Models

With adapter/One-touch fitting ø10 to ø50

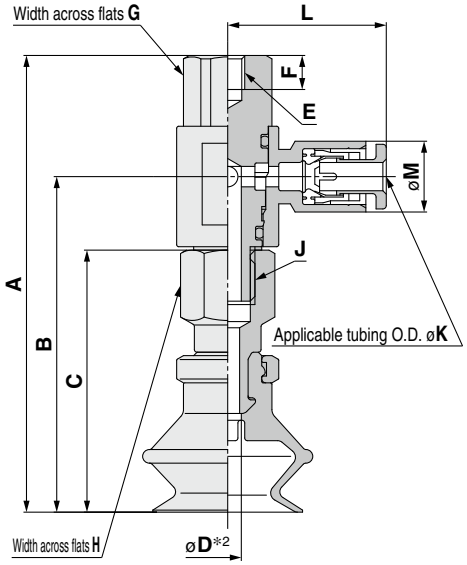

Construction	p. 117
Adapter Assembly	p. 122

ZPR 10 B N – 04 – B5

❶ ❷ ❸ ❹

❸ **Vacuum inlet (One-touch fitting)**

04	ø4
06	ø6
08	ø8

❹ **Connection thread (Female thread)**

B5	M5 x 0.8
B6	M6 x 1
B8	M8 x 1.25

Model							A	B	C	D*2	E	F	G	H	J
Vacuum inlet direction		❶ Pad dia.	Form	❷ *1 Material	❸ Vacuum inlet	❹ Connection thread									
ZP	R	10	B	N S U F GN GS	04 06 08	B5	50	33.9	25	2.5	M5 x 0.8	5	10	8	M5 x 0.8
		13					52.5	36.4	27.5						
		16					54	37.9	29						
		20					67.1	49.3	38.5	3.5			12	12	M8 x 1.25
		25					67.6	49.8	39						
		32					72.6	54.8	44						
		10				B6	50	33.9	25	2.5	M6 x 1	6	10	8	M5 x 0.8
		13					52.5	36.4	27.5						
		16					54	37.9	29						
		20					67.1	49.3	38.5	3.5			12	12	M8 x 1.25
		25					67.6	49.8	39						
		32					72.6	54.8	44						
		40					76.1	58.3	47.5	4					
		50					80.1	62.3	51.5						
		20				B8	67.1	49.3	38.5	3.5	M8 x 1.25	8	12	12	M8 x 1.25
		25					67.6	49.8	39						
		32					72.6	54.8	44						
		40					76.1	58.3	47.5	4					
		50					80.1	62.3	51.5						

Dimensions Per Vacuum Inlet

Model							K	L	M	Fitting part min. hole size
Vacuum inlet direction		❶ Pad dia.	Form	❷ *1 Material	❸ Vacuum inlet	❹ Connection thread				
ZP	R	10 13 16	B	N S U F GN GS	04	B5 B6	4	20.6	10.4	ø3
					06		6	21.6	12.8	ø4
		20 25 32			04	B5	4	23.3	10.4	ø3
					06	B6	6	24.3	12.8	ø4.5
					08	B8	8	26.2	15.2	ø6
		40 50			06	B6	6	24.3	12.8	ø4.5
					08	B8	8	26.2	15.2	ø6

*1 N: NBR, S: Silicone rubber, U: Urethane rubber, F: FKM, GN: Conductive NBR, GS: Conductive silicone rubber

*2 Indicates the minimum hole size of the adapter or vacuum pad

Dimensions/Models

With adapter/barb fitting ø6 to ø8

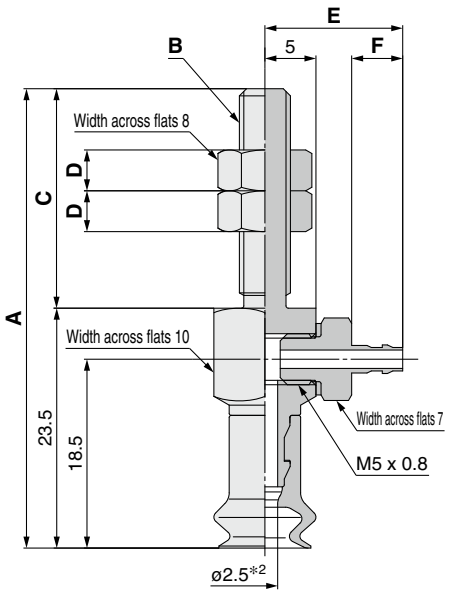

Construction	p. 115
Adapter Assembly	p. 123

ZPY 06 B N – N4 – A5
❶ ❷ ❸ ❹

❸ Vacuum inlet (Barb fitting)

N4	For ø4 nylon tubing	M-5AN-4
N6	For ø6 nylon tubing	M-5AN-6
U4	For ø4 soft tubing	M-5AU-4
U6	For ø6 soft tubing	M-5AU-6

❹ Connection thread (Male thread)

A5	M5 x 0.8
A6	M6 x 1

Model							A	B	C	D
	Vacuum inlet direction	❶ Pad dia.	Form	❷ *1 Material	❸ Vacuum inlet	❹ Connection thread				
ZP	Y	06 08	B	N S U F GN GS	N4 N6 U4 U6	A5	45	M5 x 0.8	21.5	4
						A6	50.5	M6 x 1	27	3

Dimensions Per Vacuum Inlet

Model							E	F	Fitting part min. hole size
	Vacuum inlet direction	❶ Pad dia.	Form	❷ *1 Material	❸ Vacuum inlet	❹ Connection thread			
ZP	Y	06 08	B	N S U F GN GS	N4 U4	A5 A6	13.5	5	ø1.8
					N6 U6		15.5	7	ø2.5

*1 N: NBR, S: Silicone rubber, U: Urethane rubber, F: FKM, GN: Conductive NBR, GS: Conductive silicone rubber
*2 Indicates the minimum hole size of the adapter or vacuum pad

Dimensions/Models

With adapter/barb fitting ø10 to ø50

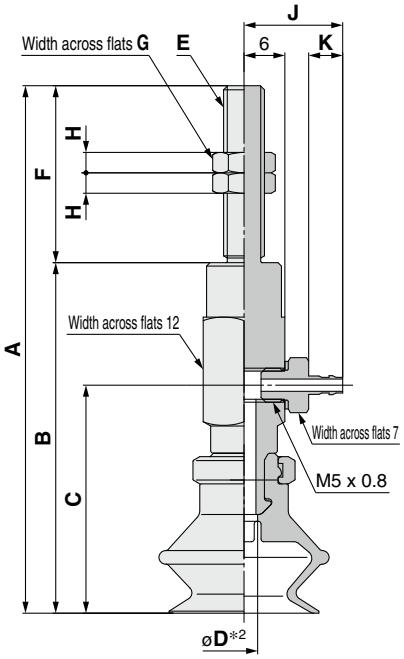

Construction	p. 117
Adapter Assembly	p. 123

ZPY ❶10 B ❷N – ❸N4 – ❹A5

❸ Vacuum inlet (Barb fitting)

N4	For ø4 nylon tubing	M-5AN-4
N6	For ø6 nylon tubing	M-5AN-6
U4	For ø4 soft tubing	M-5AU-4
U6	For ø6 soft tubing	M-5AU-6

❹ Connection thread (Male thread)

A5	M5 x 0.8
A6	M6 x 1
A8	M8 x 1

Model							A	B	C	D*2	E	F	G	H
	Vacuum inlet direction	❶ Pad dia.	Form	❷ *1 Material	❸ Vacuum inlet	❹ Connection thread								
ZP	Y	10	B	N S U F GN GS	N4 N6 U4 U6	A5	63	42	26	2.5	M5 x 0.8	21	8	4
		13					65.5	44.5	28.5					
		16					67	46	30					
		10				A6	68	42	26	2.5	M6 x 1	26	8	3
		13					70.5	44.5	28.5					
		16					72	46	30					
		20					77.5	51.5	33.5	3.5				
		25					78	52	34					
		32					83	57	39					
		40					88	62	44	6				
		50					92	66	48					
		20				A8	67.5	51.5	33.5	3.5	M8 x 1	16	12	3
		25					68	52	34					
		32					73	57	39					
		40					78	62	44	6				
		50					82	66	48					

Dimensions Per Vacuum Inlet

Model							J	K	Fitting part min. hole size
	Vacuum inlet direction	❶ Pad dia.	Form	❷ *1 Material	❸ Vacuum inlet	❹ Connection thread			
ZP	Y	10 13 16 20 25 32	B	N S U F GN GS	N4 U4	A5 A6	14.5	5	ø1.8
					N6 U6		16.5	7	ø2.5
		40 50			N6 U6	A6 A8	16.5	7	ø2.5

*1 N: NBR, S: Silicone rubber, U: Urethane rubber, F: FKM, GN: Conductive NBR, GS: Conductive silicone rubber
*2 Indicates the minimum hole size of the adapter or vacuum pad

Dimensions/Models

With adapter/barb fitting ø6 to ø8

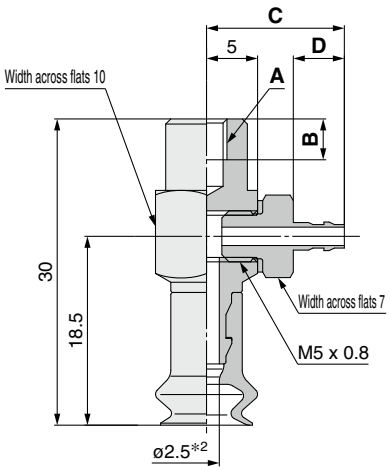

Construction	p. 115
Adapter Assembly	p. 123

ZPY 06 B N – N4 – B4
❶ ❷ ❸ ❹

❸ **Vacuum inlet (Barb fitting)**

N4	For ø4 nylon tubing	M-5AN-4
N6	For ø6 nylon tubing	M-5AN-6
U4	For ø4 soft tubing	M-5AU-4
U6	For ø6 soft tubing	M-5AU-6

❹ **Connection thread (Female thread)**

B4	M4 x 0.7
B5	M5 x 0.8

Model							A	B
	Vacuum inlet direction	❶ Pad dia.	Form	❷ *1 Material	❸ Vacuum inlet	❹ Connection thread		
ZP	**Y**	**06 08**	**B**	**N S U F GN GS**	**N4 N6 U4 U6**	**B4**	M4 x 0.7	4
						B5	M5 x 0.8	5

Dimensions Per Vacuum Inlet

Model							C	D	Fitting part min. hole size
	Vacuum inlet direction	❶ Pad dia.	Form	❷ *1 Material	❸ Vacuum inlet	❹ Connection thread			
ZP	**Y**	**06 08**	**B**	**N S U F GN GS**	**N4 U4**	**B4 B5**	13.5	5	ø1.8
					N6 U6		15.5	7	ø2.5

*1 N: NBR, S: Silicone rubber, U: Urethane rubber, F: FKM, GN: Conductive NBR, GS: Conductive silicone rubber

*2 Indicates the minimum hole size of the adapter or vacuum pad

Dimensions/Models

With adapter/barb fitting ø10 to ø50

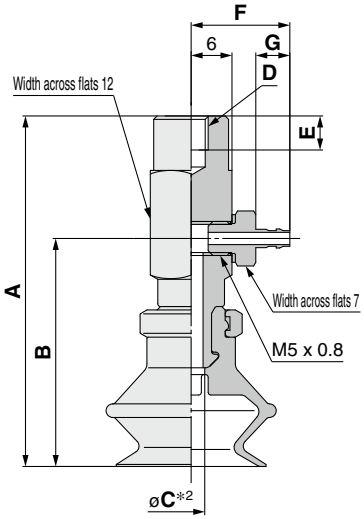

Construction	p. 117
Adapter Assembly	p. 123

ZPY 10 B N – N4 – B5
❶ ❷ ❸ ❹

❸ Vacuum inlet (Barb fitting)

N4	For ø4 nylon tubing	M-5AN-4
N6	For ø6 nylon tubing	M-5AN-6
U4	For ø4 soft tubing	M-5AU-4
U6	For ø6 soft tubing	M-5AU-6

❹ Connection thread (Female thread)

B5	M5 x 0.8
B6	M6 x 1
B8	M8 x 1.25

Model							A	B	C*2	D	E
Vacuum inlet direction		❶ Pad dia.	Form	❷ *1 Material	❸ Vacuum inlet	❹ Connection thread					
ZP	Y	10	B	N S U F GN GS	N4 N6 U4 U6	B5	42	26	2.5	M5 x 0.8	5
		13					44.5	28.5			
		16					46	30			
		20					51.5	33.5	3.5		
		25					52	34			
		32					57	39			
		10				B6	42	26	2.5	M6 x 1	6
		13					44.5	28.5			
		16					46	30			
		20					51.5	33.5	3.5		
		25					52	34			
		32					57	39			
		40					62	44	6		
		50					66	48			
		20				B8	51.5	33.5	3.5	M8 x 1.25	8
		25					52	34			
		32					57	39			
		40					62	44	6		
		50					66	48			

Dimensions Per Vacuum Inlet

Model							F	G	Fitting part min. hole size
Vacuum inlet direction		❶ Pad dia.	Form	❷ *1 Material	❸ Vacuum inlet	❹ Connection thread			
ZP	Y	10 13 16	B	N S U F GN GS	N4 U4	B4 B5	14.5	5	ø1.8
					N6 U6		16.5	7	ø2.5
		20 25 32			N4 U4	B5 B6 B8	14.5	5	ø1.8
					N6 U6		16.5	7	ø2.5
		40 50			N6 U6	B6 B8	16.5	7	ø2.5

*1 N: NBR, S: Silicone rubber, U: Urethane rubber, F: FKM, GN: Conductive NBR, GS: Conductive silicone rubber
*2 Indicates the minimum hole size of the adapter or vacuum pad

Dimensions/Models

With buffer ø6 to ø8

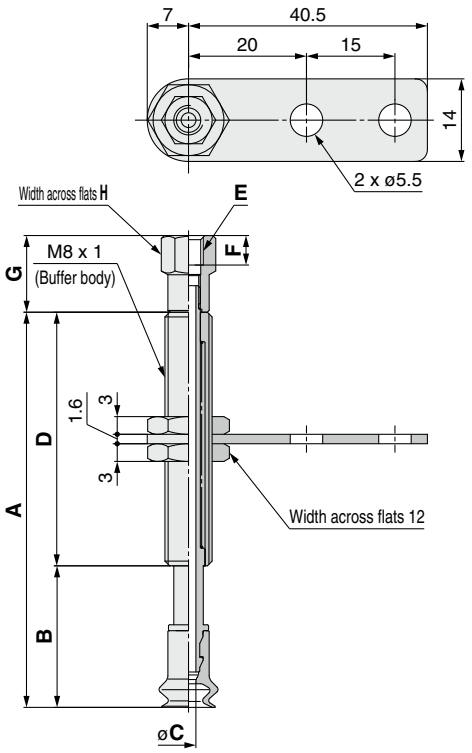

ZPT 06 B N J 6 – B3 – A8
❶ ❷ ❸ ❹ ❺ ❻

❸ Buffer specification

J	Rotating
K	Non-rotating

❻ Connection thread (Male thread)

A8	M8 x 1

❺ Vacuum inlet

B3	M3 x 0.5	Female thread	
B5	M5 x 0.8		
04	ø4	One-touch fitting	KQ2H04-M5N
06	ø6		KQ2H06-M5N
N4	For ø4 nylon tubing	Barb fitting	
U4	For ø4 soft tubing		

Model									A	B	C*2	D
	Vacuum inlet direction	❶ Pad dia.	Form	❷ *1 Material	❸ Buffer spec.	❹ Buffer stroke	❺ Vacuum inlet	❻ Connection thread				
ZP	T	06 08	B	N S U F GN GS	J K	6	B3 B5 04 06 N4 U4	A8	34	19	J: 2.5 K: 2	15
						10			67	24		43
						15			72	29		
						25			82	39		

Dimensions Per Vacuum Inlet: Female Thread

Model									E	F	G	H
	Vacuum inlet direction	❶ Pad dia.	Form	❷ *1 Material	❸ Buffer spec.	❹ Buffer stroke	❺ Vacuum inlet	❻ Connection thread				
ZP	T	06 08	B	N S U F GN GS	J K	6 10 15 25	B3	A8	M3 x 0.5	3	11	6
							B5		M5 x 0.8	5	13	8

Dimensions Per Vacuum Inlet: One-touch Fitting

Model									G	H	J	Fitting part min. hole size
	Vacuum inlet direction	❶ Pad dia.	Form	❷ *1 Material	❸ Buffer spec.	❹ Buffer stroke	❺ Vacuum inlet	❻ Connection thread				
ZP	T	06 08	B	N S U F GN GS	J K	6 10 15 25	04	A8	27.7	8	4	ø2.5
							06			10	6	

Dimensions Per Vacuum Inlet: Barb Fitting

Model									G	H	Fitting part min. hole size
	Vacuum inlet direction	❶ Pad dia.	Form	❷ *1 Material	❸ Buffer spec.	❹ Buffer stroke	❺ Vacuum inlet	❻ Connection thread			
ZP	T	06 08	B	N S U F GN GS	J K	6 10 15 25	N4	A8	14	6	ø1.8
							U4				

*1 N: NBR, S: Silicone rubber, U: Urethane rubber, F: FKM, GN: Conductive NBR, GS: Conductive silicone rubber

*2 Indicates the minimum hole size of the adapter or vacuum pad

Vacuum inlet: One-touch fitting

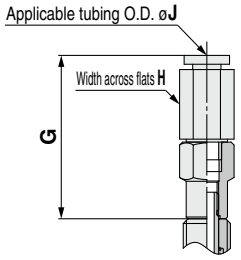

Vacuum inlet: Barb fitting

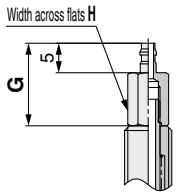

Construction	p. 116
Buffer Assembly	p. 124

Dimensions/Models

With buffer ø10 to ø50

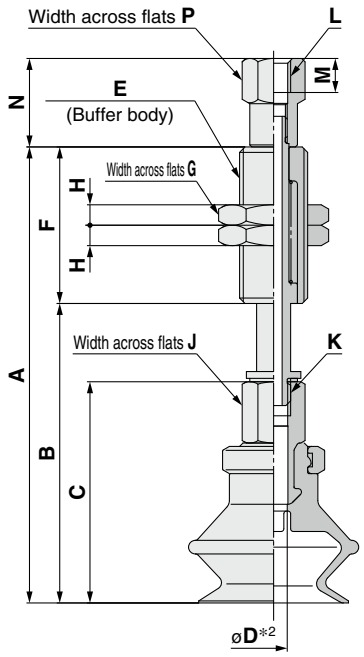

Construction	p. 118
Buffer Assembly	p. 124

ZPT 10 B N J 10 – B5 – A10
❶ ❷ ❸ ❹ ❺ ❻

❸ Buffer specification

J	Rotating
K	Non-rotating

❺ Vacuum inlet (Female thread)

B5	M5 x 0.8
B01	Rc1/8
N01	NPT1/8
T01	NPTF1/8

❻ Connection thread (Male thread)

A10	M10 x 1
A14	M14 x 1

Model: Vacuum inlet direction	❶ Pad dia.	Form	❷ *1 Material	❸ Buffer spec.	❹ Buffer stroke	❺ Vacuum inlet	❻ Connection thread	A	B	C	D*2	E	F	G	H	J	K
ZP	T	B	N S U F GN GS	J K	10	B5 04 06 N6 U6	A10	59.5	36.5	25	J: 2.5 K: 2	M10 x 1	23	14	3	8	M5 x 0.8
					20			97.5	46.5				51				
					30			107.5	56.5								
					40			143.5	66.5				77				
					50			153.5	76.5								
					10			62	39	27.5			23				
					20			100	49				51				
					30			110	59								
					40			146	69				77				
					50			156	79								
					10			63.5	40.5	29			23				
					20			101.5	50.5				51				
					30			111.5	60.5								
					40			147.5	70.5				77				
					50			157.5	80.5								
					10			67	44	32.5			23				
					20			105	54				51				
					30			115	64								
					40			151	74				77				
					50			161	84								
					10			67.5	44.5	33			23				
					20			105.5	54.5				51				
					30			115.5	64.5								
					40			151.5	74.5				77				
					50			161.5	84.5								
					10			72.5	49.5	38			23				
					20			110.5	59.5				51				
					30			120.5	69.5								
					40			156.5	79.5				77				
					50			166.5	89.5								
					10	B5 06 08 N6 U6	A14	110	60	47.5	4	M14 x 1	50	19	5	12	M8 x 1.25
					20			120	70								
					30			130	80								
					50			175	100				75				
					10			114	64	51.5			50				
					20			124	74								
					30			134	84								
					50			179	104				75				

Dimensions Per Vacuum Inlet: Female Thread

Model: Vacuum inlet direction	❶ Pad dia.	Form	❷ *1 Material	❸ Buffer spec.	❹ Buffer stroke	❺ Vacuum inlet	❻ Connection thread	L	M	N	P
ZP	T	B	N S U F GN GS	J K	10 20 30 40 50	B5	A10	M5 x 0.8	5	13	8
					10	B5	A14	M5 x 0.8	4.5	15	10
					20 30 50				5	9	
					10	B01 N01 T01		Rc1/8 NPT1/8 NPTF1/8	—	16.5	13
					20 30 50					12	

*1 N: NBR, S: Silicone rubber, U: Urethane rubber, F: FKM, GN: Conductive NBR, GS: Conductive silicone rubber

*2 Indicates the minimum hole size of the adapter or vacuum pad

Dimensions/Models

With buffer ø10 to ø50

ZPT 10 B N J 10 – 04 – A10
❶ ❷ ❸ ❹ ❺ ❻

Buffer specification ❸

J	Rotating
K	Non-rotating

❻ Connection thread (Male thread)

A10	M10 x 1
A14	M14 x 1

❺ Vacuum inlet

			Pad diameter	
			ø10 to ø32	ø40, ø50 (10 st only)
04	ø4	One-touch fitting	KQ2H04-M5N	
06	ø6		KQ2H06-M5N	KQ2H06-01NS
08	ø8			KQ2H08-01NS
N6	For ø6 nylon tubing	Barb fitting		
U6	For ø6 soft tubing			

Vacuum inlet: One-touch fitting

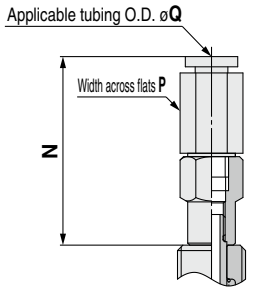

Vacuum inlet: Built-in One-touch fitting
Pad diameter: ø40, ø50 (Buffer stroke: 20 to 50 st)

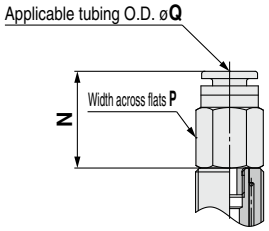

Vacuum inlet: Barb fitting

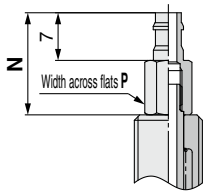

Dimensions Per Vacuum Inlet: One-touch Fitting

Model									N	P	Q	Fitting part min. hole size
	Vacuum inlet direction	❶ Pad dia.	Form	❷ *1 Material	❸ Buffer spec.	❹ Buffer stroke	❺ Vacuum inlet	❻ Connection thread				
ZP	T	10 13 16 20 25 32	B	N S U F GN GS	J K	10 20 30 40 50	04	A10	27.7	8	4	ø2.5
							06			10	6	
		40 50				10	06	A14	31.8	10	6	ø4.5
							08		35.9	14	8	ø6
						20 30 50	06		19.9	12	6	ø3
							08		24.9	14	8	

Dimensions Per Vacuum Inlet: Barb Fitting

Model									N	P	Fitting part min. hole size
	Vacuum inlet direction	❶ Pad dia.	Form	❷ *1 Material	❸ Buffer spec.	❹ Buffer stroke	❺ Vacuum inlet	❻ Connection thread			
ZP	T	10 13 16 20 25 32	B	N S U F GN GS	J K	10 20 30 40 50	N6	A10	15	6	ø2.5
							U6				
		40 50				10	N6	A14	19	10	
							U6				
						20 30 50	N6		12		
							U6				

*1 N: NBR, S: Silicone rubber, U: Urethane rubber, F: FKM, GN: Conductive NBR, GS: Conductive silicone rubber

Construction	p. 118
Buffer Assembly	p. 124

Dimensions/Models

With buffer/One-touch fitting ø6 to ø8

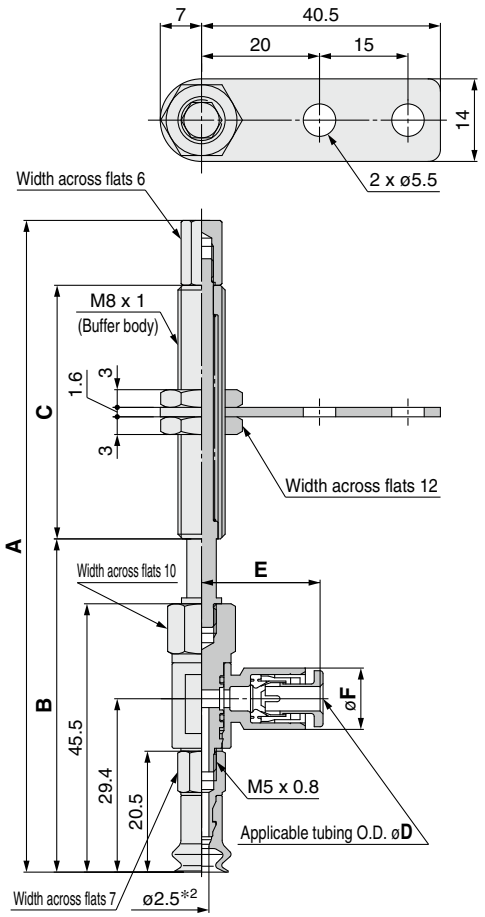

ZPR 06 B N J 6 - 04 - A8
❶ ❷ ❸ ❹ ❺ ❻

❸ Buffer specification

J	Rotating
K	Non-rotating

❻ Connection thread (Male thread)

A8	M8 x 1

❺ Vacuum inlet (One-touch fitting)

04	ø4
06	ø6

Model									A	B	C
	Vacuum inlet direction	❶ Pad dia.	Form	❷ *1 Material	❸ Buffer spec.	❹ Buffer stroke	❺ Vacuum inlet	❻ Connection thread			
ZP	R	06 08	B	N S U F GN GS	J K	6	04 06	A8	79.5	53.5	15
						10			110.5	56.5	43
						15			115.5	61.5	
						25			125.5	71.5	

Dimensions Per Vacuum Inlet

Model									D	E	F	Fitting part min. hole size
	Vacuum inlet direction	❶ Pad dia.	Form	❷ *1 Material	❸ Buffer spec.	❹ Buffer stroke	❺ Vacuum inlet	❻ Connection thread				
ZP	R	06 08	B	N S U F GN GS	J K	6 10 15 25	04	A8	4	20.6	10.4	ø3
							06		6	21.6	12.8	ø4

*1 N: NBR, S: Silicone rubber, U: Urethane rubber, F: FKM, GN: Conductive NBR, GS: Conductive silicone rubber
*2 Indicates the minimum hole size of the adapter or vacuum pad

Construction	p. 116
Buffer Assembly	p. 125

Dimensions/Models

With buffer/One-touch fitting ø10 to ø50

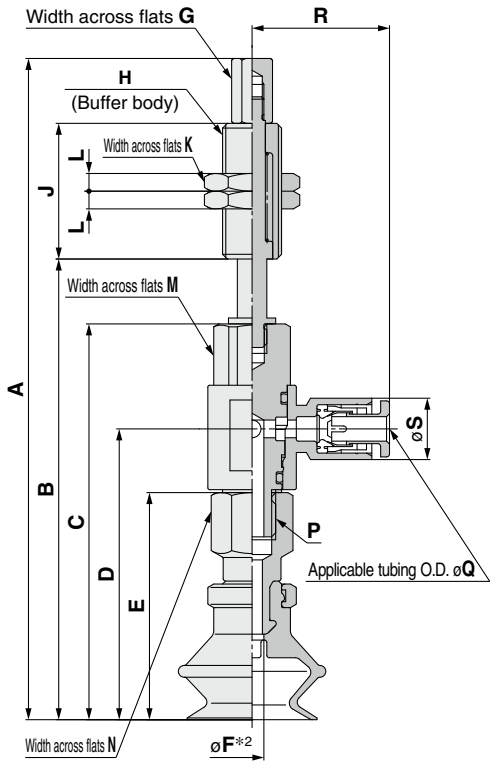

Construction	p. 118
Buffer Assembly	p. 125

ZPR 10 B N J 10 – 04 – A10
❶ ❷ ❸ ❹ ❺ ❻

❸ Buffer specification

J	Rotating
K	Non-rotating

❺ Vacuum inlet (One-touch fitting)

04	ø4
06	ø6
08	ø8

❻ Connection thread (Male thread)

A10	M10 x 1
A14	M14 x 1

Model									A	B	C	D	E	*2 F	G	H	J	K	L	M	N	P
	Vacuum inlet direction	❶ Pad dia.	Form	❷ *1 Material	❸ Buffer spec.	❹ Buffer stroke	❺ Vacuum inlet	❻ Connection thread														
ZP	R	10	B	N S U F GN GS	J K	10	04 06	A10	95	61	50	33.9	25	2.5	6	M10 x 1	23	14	3	10	8	M5 x 0.8
						20			133	71							51					
						30			143	81												
						40			179	91							77					
						50			189	101												
		13				10			97.5	63.5	52.5	36.4	27.5				23					
						20			135.5	73.5							51					
						30			145.5	83.5												
						40			181.5	93.5							77					
						50			191.5	103.5												
		16				10			99	65	54	37.9	29				23					
						20			137	75							51					
						30			147	85												
						40			183	95							77					
						50		A10	193	105												
		20				10	04 06 08		112.1	78.1	67.1	49.3	38.5	3.5			23			12	12	M8 x 1.25
						20			150.1	88.1							51					
						30			160.1	98.1												
						40			196.1	108.1							77					
						50			206.1	118.1												
		25				10			112.6	78.6	67.6	49.8	39				23					
						20			150.6	88.6							51					
						30			160.6	98.6												
						40			196.6	108.6							77					
						50			206.6	118.6												
		32				10			117.6	83.6	72.6	54.8	44				23					
						20			155.6	93.6							51					
						30			165.6	103.6												
						40			201.6	113.6							77					
						50			211.6	123.6												
		40				10	06 08	A14	156.1	88.1	76.1	58.3	47.5	4	10	M14 x 1	50	19	5	12	12	M8 x 1.25
						20			153.1	98.1												
						30			163.1	108.1												
						50			208.1	128.1							75					
		50				10			160.1	92.1	80.1	62.3	51.5				50					
						20			157.1	102.1												
						30			167.1	112.1												
						50			212.1	132.1							75					

Dimensions Per Vacuum Inlet

Model									Q	R	S	Fitting part min. hole size
	Vacuum inlet direction	❶ Pad dia.	Form	❷ *1 Material	❸ Buffer spec.	❹ Buffer stroke	❺ Vacuum inlet	❻ Connection thread				
ZP	R	10 13 16	B	N S U F GN GS	J K	10 20 30 40 50	04	A10	4	20.6	10.4	ø3
							06		6	21.6	12.8	ø4
		20 25 32				10 20 30 40 50	04		4	23.3	10.4	ø3
							06		6	24.3	12.8	ø4.5
							08		8	26.2	15.2	ø6
		40 50				10 20 30 50	06	A14	6	24.3	12.8	ø4.5
							08		8	26.2	15.2	ø6

*1 N: NBR, S: Silicone rubber, U: Urethane rubber, F: FKM, GN: Conductive NBR, GS: Conductive silicone rubber

*2 Indicates the minimum hole size of the adapter or vacuum pad

Dimensions/Models

With buffer/barb fitting ø6 to ø8

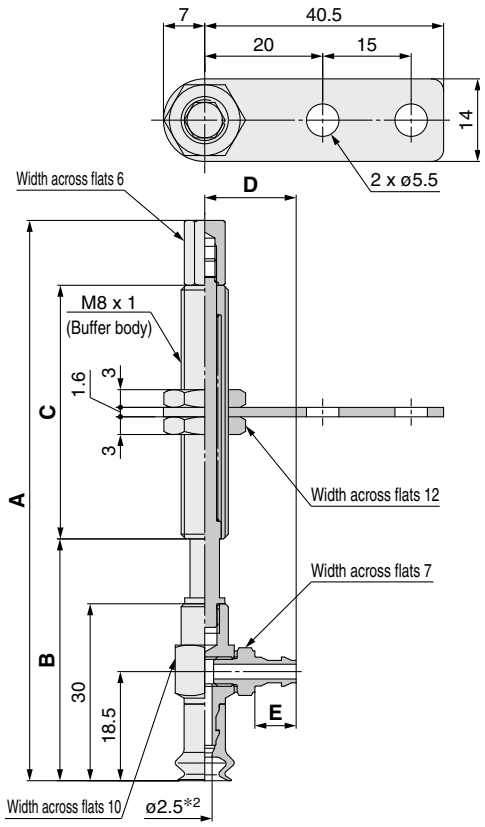

Construction	p. 116
Buffer Assembly	p. 126

ZPY 06 B N J 6 – N4 – A8
❶ ❷ ❸ ❹ ❺ ❻

❸ Buffer specification

J	Rotating
K	Non-rotating

❻ Connection thread (Male thread)

A8	M8 x 1

❺ Vacuum inlet (Barb fitting)

N4	For ø4 nylon tubing	M-5AN-4
N6	For ø6 nylon tubing	M-5AN-6
U4	For ø4 soft tubing	M-5AU-4
U6	For ø6 soft tubing	M-5AU-6

Model									A	B	C
	Vacuum inlet direction	❶ Pad dia.	Form	❷ *1 Material	❸ Buffer spec.	❹ Buffer stroke	❺ Vacuum inlet	❻ Connection thread			
ZP	Y	06 08	B	N S U F GN GS	J K	6	N4 N6 U4 U6	A8	64	38	15
						10			95	41	43
						15			100	46	
						25			110	56	

Dimensions Per Vacuum Inlet

Model									D	E	Fitting part min. hole size
	Vacuum inlet direction	❶ Pad dia.	Form	❷ *1 Material	❸ Buffer spec.	❹ Buffer stroke	❺ Vacuum inlet	❻ Connection thread			
ZP	Y	06 08	B	N S U F GN GS	J K	6 10 15 25	N4 U4	A8	13.5	5	ø1.8
							N6 U6		15.5	7	ø2.5

*1 N: NBR, S: Silicone rubber, U: Urethane rubber, F: FKM, GN: Conductive NBR, GS: Conductive silicone rubber

*2 Indicates the minimum hole size of the adapter or vacuum pad

Dimensions/Models

With buffer/barb fitting ø10 to ø50

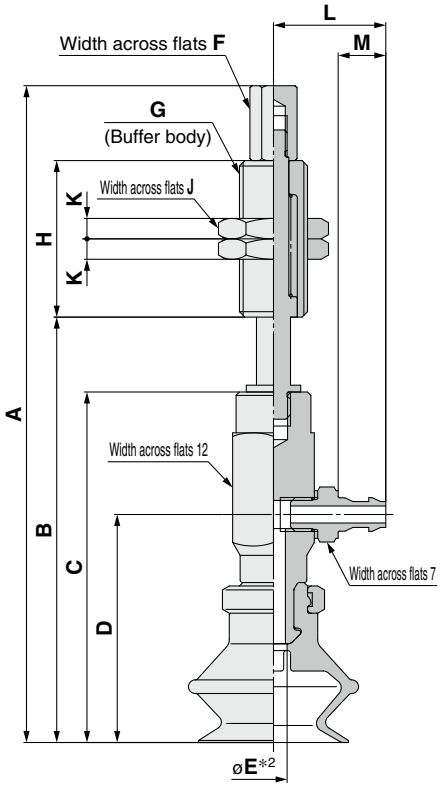

Construction	p. 118
Buffer Assembly	p. 126

ZPY 10 B N J 10 – N4 – A10
❶ ❷ ❸ ❹ ❺ ❻

❸ Buffer specification

J	Rotating
K	Non-rotating

❻ Connection thread (Male thread)

A10	M10 x 1
A14	M14 x 1

❺ Vacuum inlet (Barb fitting)

N4	For ø4 nylon tubing	M-5AN-4
N6	For ø6 nylon tubing	M-5AN-6
U4	For ø4 soft tubing	M-5AU-4
U6	For ø6 soft tubing	M-5AU-6

Model									A	B	C	D	*2 E	F	G	H	J	K
	Vacuum inlet direction	❶ Pad dia.	Form	❷ *1 Material	❸ Buffer spec.	❹ Buffer stroke	❺ Vacuum inlet	❻ Connection thread										
ZP	Y	10	B	N S U F GN GS	J K	10	N4 N6 U4 U6	A10	87	53	42	26	2.5	6	M10 x 1	23	14	3
						20			125	63						51		
						30			135	73								
						40			171	83						77		
						50			181	93								
		13				10			89.5	55.5	44.5	28.5				23		
						20			127.5	65.5						51		
						30			137.5	75.5								
						40			173.5	85.5						77		
						50			183.5	95.5								
		16				10			91	57	46	30				23		
						20			129	67						51		
						30			139	77								
						40			175	87						77		
						50			185	97								
		20				10			96.5	62.5	51.5	33.5				23		
						20			134.5	72.5						51		
						30			144.5	82.5								
						40			180.5	92.5						77		
						50			190.5	102.5								
		25				10			97	63	52	34	3.5	6	M10 x 1	23	14	3
						20			135	73						51		
						30			145	83								
						40			181	93						77		
						50			191	103								
		32				10			102	68	57	39				23		
						20			140	78						51		
						30			150	88								
						40			186	98						77		
						50			196	108								
		40				10	N6 U6	A14	142	74	62	44	6	10	M14 x 1	50	19	5
						20			139	84								
						30			149	94								
						50			194	114						75		
		50				10			146	78	66	48				50		
						20			143	88								
						30			153	98								
						50			198	118						75		

Dimensions Per Vacuum Inlet

Model									L	M	Fitting part min. hole size
	Vacuum inlet direction	❶ Pad dia.	Form	❷ *1 Material	❸ Buffer spec.	❹ Buffer stroke	❺ Vacuum inlet	❻ Connection thread			
ZP	Y	10 13 16 20 25 32	B	N S U F GN GS	J K	10 20 30 40 50	N4 U4	A10	14.5	5	ø1.8
							N6 U6		16.5	7	ø2.5
		40 50					N6 U6	A14	16.5	7	ø2.5

*1 N: NBR, S: Silicone rubber, U: Urethane rubber, F: FKM, GN: Conductive NBR, GS: Conductive silicone rubber
*2 Indicates the minimum hole size of the adapter or vacuum pad

Basic Pad
Thin Flat Type
ZP Series



How to Order

		Dimensions/ Models	Construction	Mounting Bracket Assembly
Pad unit	ZP 10 UT N	p. 87	p. 115	From p. 121
With adapter	ZP T 10 UT N – A5 –	From p. 87	p. 115	From p. 121
With buffer	ZP T 10 UT N J 6 – B3 – A8	From p. 92	p. 116	From p. 124

∗ Pad unit's sales unit: 10 pcs.

❶ ❷ ❸ ❹ ❺ ❻ ❼

Thin flat type

❶ Vacuum inlet direction

Nil	Pad unit
T	Vertical
R	Lateral (With One-touch fitting)
Y	Lateral (With barb fitting)

❷ Pad diameter

10	ø10
13	ø13
16	ø16

❸ Material

N	NBR
S	Silicone rubber∗1
U	Urethane rubber
F	FKM
GN	Conductive NBR
GS	Conductive silicone rubber

∗1 Compliant with the FDA (USA Food and Drug Administration) regulation 21CFR§177.2600 for "Rubber articles intended for repeated use"

❹ Buffer specification

J	Rotating
K	Non-rotating

❺ Buffer stroke

Stroke [mm]	Pad diameter
	All sizes
6	●
10	●
15	●
25	●

With adapter

❻ Vacuum inlet

○: ZPT/Vertical ●: ZPR/Lateral (With One-touch fitting) △: ZPY/Lateral (With barb fitting)

Type	Symbol	Size	Pad diameter
			All sizes
Male thread	A5	M5 x 0.8	○
	A6	M6 x 1	○
Female thread	B4	M4 x 0.7	○
	B5	M5 x 0.8	○
One-touch fitting	04	ø4	●
	06	ø6	●
Barb fitting	N4	For ø4 nylon tubing	△
	N6	For ø6 nylon tubing	△
	U4	For ø4 soft tubing	△
	U6	For ø6 soft tubing	△

❼ Connection thread

●: ZPR/Lateral (With One-touch fitting) △: ZPY/Lateral (With barb fitting)

Type	Symbol	Size	Pad diameter
			All sizes
Male thread	A5	M5 x 0.8	●△
	A6	M6 x 1	●△
Female thread	B4	M4 x 0.7	●△
	B5	M5 x 0.8	●△

It is not necessary to select a connection thread for ○:ZPT/Vertical.
Use the vacuum inlet.

∗ The pad, mounting nut, fitting, and buffer plate are shipped together but do not come assembled.

With buffer

❻ Vacuum inlet

○: ZPT/Vertical ●: ZPR/Lateral (With One-touch fitting) △: ZPY/Lateral (With barb fitting)

Type	Symbol	Size	Pad diameter
			All sizes
Female thread	B3	M3 x 0.5	○
	B5	M5 x 0.8	○
One-touch fitting	04	ø4	○●
	06	ø6	○●
Barb fitting	N4	For ø4 nylon tubing∗1	○△
	N6	For ø6 nylon tubing∗1	△
	U4	For ø4 soft tubing∗2	○△
	U6	For ø6 soft tubing∗2	△

∗1 Nylon tube piping
∗2 Soft nylon/Polyurethane tube piping

❼ Connection thread

○: ZPT/Vertical ●: ZPR/Lateral (With One-touch fitting) △: ZPY/Lateral (With barb fitting)

Type	Symbol	Size	Pad diameter
			All sizes
Male thread	A8	M8 x 1	○●△

Dimensions/Models

Single unit ø10 to ø16

ZP 10 UT N
❶ ❷

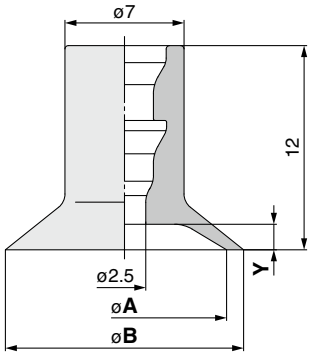

Model				A	B	Y
	❶ Pad dia.	Form	❷ *1 Material			
ZP	10	UT	N S U F GN GS	10	11	1
	13			13	14	1.5
	16			16	17	

*1 N: NBR, S: Silicone rubber, U: Urethane rubber, F: FKM, GN: Conductive NBR, GS: Conductive silicone rubber

Construction	p. 115
Mounting Bracket Assembly	From p. 121

With adapter ø10 to ø16

ZPT 10 UT N – A5
❶ ❷ ❸

❸ **Vacuum inlet (Male thread)**

A5	M5 x 0.8
A6	M6 x 1

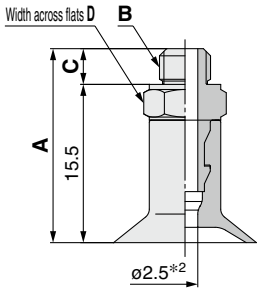

Model						A	B	C	D
	Vacuum inlet direction	❶ Pad dia.	Form	❷ *1 Material	❸ Vacuum inlet				
ZP	T	10 13 16	UT	N S U F GN GS	A5	19	M5 x 0.8	3.5	7
					A6	20	M6 x 1	4.5	8

*1 N: NBR, S: Silicone rubber, U: Urethane rubber, F: FKM, GN: Conductive NBR, GS: Conductive silicone rubber
*2 Indicates the minimum hole size of the adapter or vacuum pad

Construction	p. 115
Adapter Assembly	p. 121

ZPT 10 UT N – B4
❶ ❷ ❸

❸ **Vacuum inlet (Female thread)**

B4	M4 x 0.7
B5	M5 x 0.8

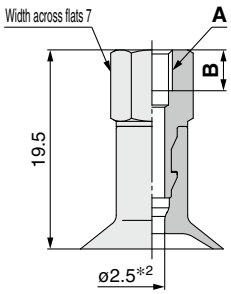

Model						A	B
	Vacuum inlet direction	❶ Pad dia.	Form	❷ *1 Material	❸ Vacuum inlet		
ZP	T	10 13 16	UT	N S U F GN GS	B4	M4 x 0.7	4
					B5	M5 x 0.8	5

*1 N: NBR, S: Silicone rubber, U: Urethane rubber, F: FKM, GN: Conductive NBR, GS: Conductive silicone rubber
*2 Indicates the minimum hole size of the adapter or vacuum pad

Construction	p. 115
Adapter Assembly	p. 121

Dimensions/Models

With adapter/One-touch fitting ø10 to ø16

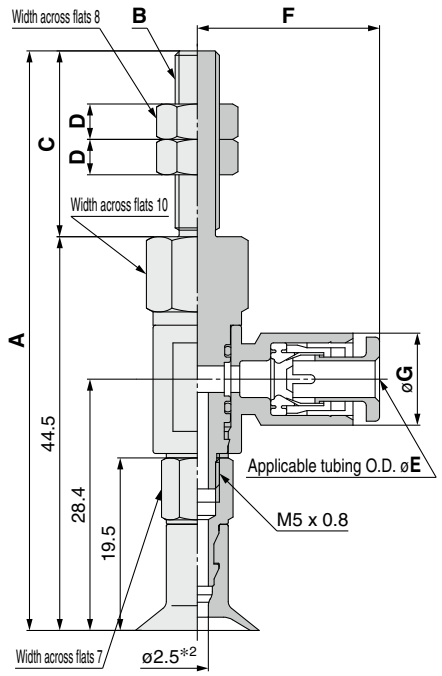

Construction	p. 115
Adapter Assembly	p. 122

ZPR ❶10 UT ❷N – ❸04 – ❹A5

❹ **Connection thread (Male thread)**

A5	M5 x 0.8
A6	M6 x 1

❸ **Vacuum inlet (One-touch fitting)**

04	ø4
06	ø6

Model							A	B	C	D
	Vacuum inlet direction	❶ Pad dia.	Form	❷ Material *1	❸ Vacuum inlet	❹ Connection thread				
ZP	R	10 13 16	UT	N S U F GN GS	04 06	A5	65.5	M5 x 0.8	21	4
						A6	70.5	M6 x 1	26	3

Dimensions Per Vacuum Inlet

Model							E	F	G	Fitting part min. hole size
	Vacuum inlet direction	❶ Pad dia.	Form	❷ Material *1	❸ Vacuum inlet	❹ Connection thread				
ZP	R	10 13 16	UT	N S U F GN GS	04	A5 A6	4	20.6	10.4	ø3
					06		6	21.6	12.8	ø4

*1 N: NBR, S: Silicone rubber, U: Urethane rubber, F: FKM, GN: Conductive NBR, GS: Conductive silicone rubber

*2 Indicates the minimum hole size of the adapter or vacuum pad

Dimensions/Models

With adapter/One-touch fitting ø10 to ø16

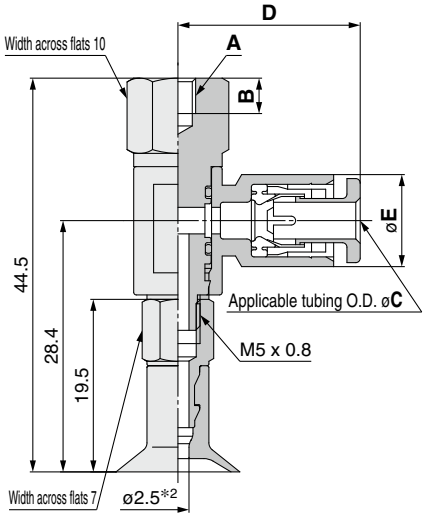

Construction	p. 115
Adapter Assembly	p. 122

ZPR 10 UT N – 04 – B4
❶ ❷ ❸ ❹

❸ **Vacuum inlet (One-touch fitting)**

04	ø4
06	ø6

❹ **Connection thread (Female thread)**

B4	M4 x 0.7
B5	M5 x 0.8

Model							A	B
	Vacuum inlet direction	❶ Pad dia.	Form	❷ Material *1	❸ Vacuum inlet	❹ Connection thread		
ZP	**R**	**10 13 16**	**UT**	**N S U F GN GS**	**04 06**	**B4**	M4 x 0.7	4
						B5	M5 x 0.8	5

Dimensions Per Vacuum Inlet

Model							C	D	E	Fitting part min. hole size
	Vacuum inlet direction	❶ Pad dia.	Form	❷ Material *1	❸ Vacuum inlet	❹ Connection thread				
ZP	**R**	**10 13 16**	**UT**	**N S U F GN GS**	**04**	**B4 B5**	4	20.6	10.4	ø3
					06		6	21.6	12.8	ø4

*1 N: NBR, S: Silicone rubber, U: Urethane rubber, F: FKM, GN: Conductive NBR, GS: Conductive silicone rubber

*2 Indicates the minimum hole size of the adapter or vacuum pad

Dimensions/Models

With adapter/barb fitting ø10 to ø16

ZPY ❶10 UT ❷N – N4 – A5

❸ Vacuum inlet (Barb fitting)

N4	For ø4 nylon tubing	M-5AN-4
N6	For ø6 nylon tubing	M-5AN-6
U4	For ø4 soft tubing	M-5AU-4
U6	For ø6 soft tubing	M-5AU-6

❹ Connection thread (Male thread)

A5	M5 x 0.8
A6	M6 x 1

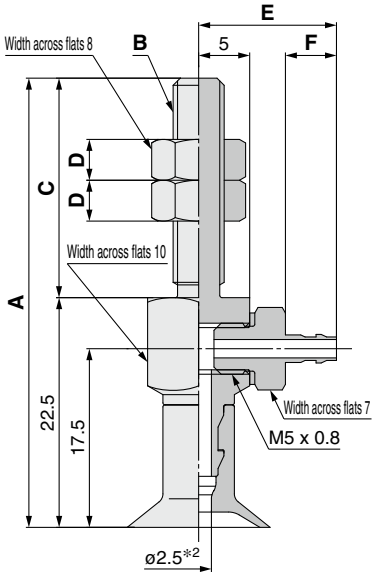

Construction	p. 115
Adapter Assembly	p. 123

Model							A	B	C	D
	Vacuum inlet direction	❶ Pad dia.	Form	❷ Material *1	❸ Vacuum inlet	❹ Connection thread				
ZP	**Y**	**10 13 16**	**UT**	**N S U F GN GS**	**N4 N6 U4 U6**	**A5**	44	M5 x 0.8	21.5	4
						A6	49.5	M6 x 1	27	3

Dimensions Per Vacuum Inlet

Model							E	F	Fitting part min. hole size
	Vacuum inlet direction	❶ Pad dia.	Form	❷ Material *1	❸ Vacuum inlet	❹ Connection thread			
ZP	**Y**	**10 13 16**	**UT**	**N S U F GN GS**	**N4 U4**	**A5 A6**	13.5	5	ø1.8
					N6 U6		15.5	7	ø2.5

*1 N: NBR, S: Silicone rubber, U: Urethane rubber, F: FKM, GN: Conductive NBR, GS: Conductive silicone rubber

*2 Indicates the minimum hole size of the adapter or vacuum pad

Dimensions/Models

With adapter/barb fitting ø10 to ø16

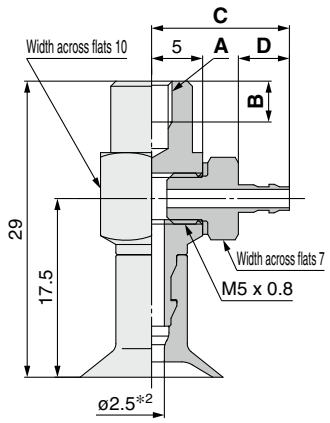

Construction	p. 115
Adapter Assembly	p. 123

ZPY ❶10 UT ❷N – N4 – B4

❸ **Vacuum inlet (Barb fitting)**

N4	For ø4 nylon tubing	M-5AN-4
N6	For ø6 nylon tubing	M-5AN-6
U4	For ø4 soft tubing	M-5AU-4
U6	For ø6 tubing	M-5AU-6

❹ **Connection thread (Female thread)**

B4	M4 x 0.7
B5	M5 x 0.8

Model							A	B
	Vacuum inlet direction	❶ Pad dia.	Form	❷ *1 Material	❸ Vacuum inlet	❹ Connection thread		
ZP	**Y**	**10 13 16**	**UT**	**N S U F GN GS**	**N4 N6 U4 U6**	**B4**	M4 x 0.7	4
						B5	M5 x 0.8	5

Dimensions Per Vacuum Inlet

Model							C	D	Fitting part min. hole size
	Vacuum inlet direction	❶ Pad dia.	Form	❷ *1 Material	❸ Vacuum inlet	❹ Connection thread			
ZP	**Y**	**10 13 16**	**UT**	**N S U F GN GS**	**N4 U4**	**B4 B5**	13.5	5	ø1.8
					N6 U6		15.5	7	ø2.5

*1 N: NBR, S: Silicone rubber, U: Urethane rubber, F: FKM, GN: Conductive NBR, GS: Conductive silicone rubber

*2 Indicates the minimum hole size of the adapter or vacuum pad

Dimensions/Models

With buffer ø10 to ø16

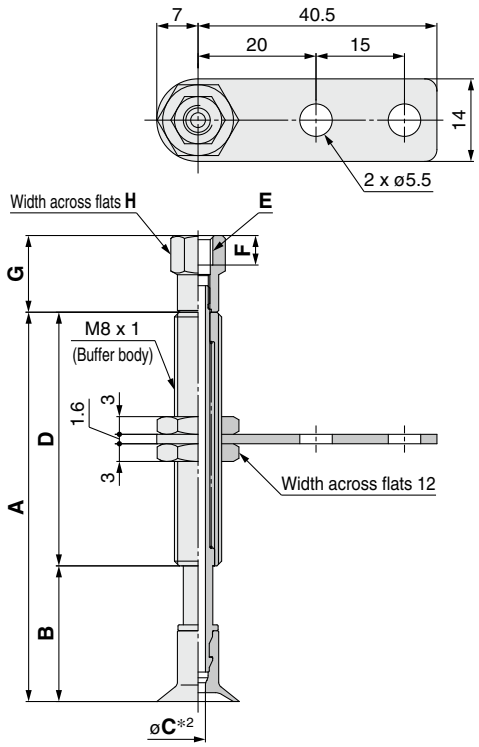

ZPT 10 UT N J 6 – B3 – A8
❶ ❷ ❸ ❹ ❺ ❻

❸ Buffer specification

J	Rotating
K	Non-rotating

❻ Connection thread (Male thread)

A8	M8 x 1

❺ Vacuum inlet

B3	M3 x 0.5	Female thread	
B5	M5 x 0.8		
04	ø4	One-touch fitting	KQ2H04-M5N
06	ø6		KQ2H06-M5N
N4	For ø4 nylon tubing	Barb fitting	
U4	For ø4 soft tubing		

Model									A	B	C*2	D
	❶ Vacuum inlet direction	❶ Pad dia.	❶ Form	❷ *1 Material	❸ Buffer spec.	❹ Buffer stroke	❺ Vacuum inlet	❻ Connection thread				
ZP	T	10 13 16	UT	N S U F GN GS	J K	6	B3 B5 04 06 N4 U4	A8	33	18	J: 2.5 K: 2	15
						10			66	23		43
						15			71	28		
						25			81	38		

Dimensions Per Vacuum Inlet: Female Thread

Model									E	F	G	H
	❶ Vacuum inlet direction	❶ Pad dia.	❶ Form	❷ *1 Material	❸ Buffer spec.	❹ Buffer stroke	❺ Vacuum inlet	❻ Connection thread				
ZP	T	10 13 16	UT	N S U F GN GS	J K	6 10 15 25	B3	A8	M3 x 0.5	3	11	6
							B5		M5 x 0.8	5	13	8

Dimensions Per Vacuum Inlet: One-touch Fitting

Model									G	H	J	Fitting part min. hole size
	❶ Vacuum inlet direction	❶ Pad dia.	❶ Form	❷ *1 Material	❸ Buffer spec.	❹ Buffer stroke	❺ Vacuum inlet	❻ Connection thread				
ZP	T	10 13 16	UT	N S U F GN GS	J K	6 10 15 25	04	A8	27.7	8	4	ø2.5
							06			10	6	

Dimensions Per Vacuum Inlet: Barb Fitting

Model									G	H	Fitting part min. hole size
	❶ Vacuum inlet direction	❶ Pad dia.	❶ Form	❷ *1 Material	❸ Buffer spec.	❹ Buffer stroke	❺ Vacuum inlet	❻ Connection thread			
ZP	T	10 13 16	UT	N S U F GN GS	J K	6 10 15 25	N4	A8	14	6	ø1.8
							U4				

*1 N: NBR, S: Silicone rubber, U: Urethane rubber, F: FKM, GN: Conductive NBR, GS: Conductive silicone rubber
*2 Indicates the minimum hole size of the adapter or vacuum pad

Vacuum inlet: One-touch fitting

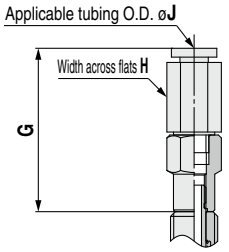

Vacuum inlet: Barb fitting

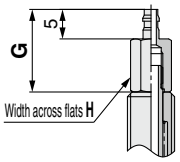

Construction	p. 116
Buffer Assembly	p. 124

Dimensions/Models

With buffer/One-touch fitting ø10 to ø16

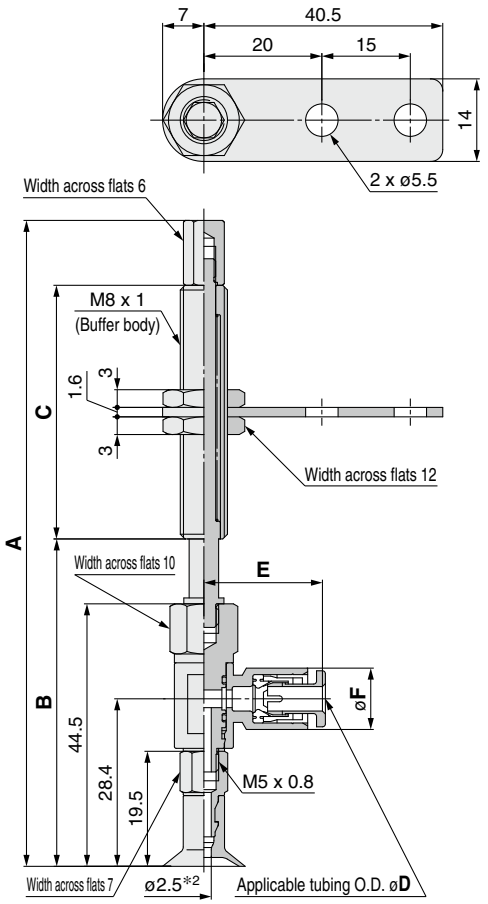

ZPR 10 UT N J 6 – 04 – A8
❶ ❷ ❸ ❹ ❺ ❻

❸ Buffer specification

J	Rotating
K	Non-rotating

❺ Vacuum inlet (One-touch fitting)

04	ø4
06	ø6

❻ Connection thread (Male thread)

A8	M8 x 1

Model									A	B	C
	Vacuum inlet direction	❶ Pad dia.	Form	❷ *1 Material	❸ Buffer spec.	❹ Buffer stroke	❺ Vacuum inlet	❻ Connection thread			
ZP	R	10 13 16	UT	N S U F GN GS	J K	6	04 06	A8	78.5	52.5	15
						10			109.5	55.5	43
						15			114.5	60.5	
						25			124.5	70.5	

Dimensions Per Vacuum Inlet

Model									D	E	F	Fitting part min. hole size
	Vacuum inlet direction	❶ Pad dia.	Form	❷ *1 Material	❸ Buffer spec.	❹ Buffer stroke	❺ Vacuum inlet	❻ Connection thread				
ZP	R	10 13 16	UT	N S U F GN GS	J K	6 10 15 25	04	A8	4	20.6	10.4	ø3
							06		6	21.6	12.8	ø4

*1 N: NBR, S: Silicone rubber, U: Urethane rubber, F: FKM, GN: Conductive NBR, GS: Conductive silicone rubber
*2 Indicates the minimum hole size of the adapter or vacuum pad

Construction	p. 116
Buffer Assembly	p. 125

Dimensions/Models

With buffer/barb fitting ø10 to ø16

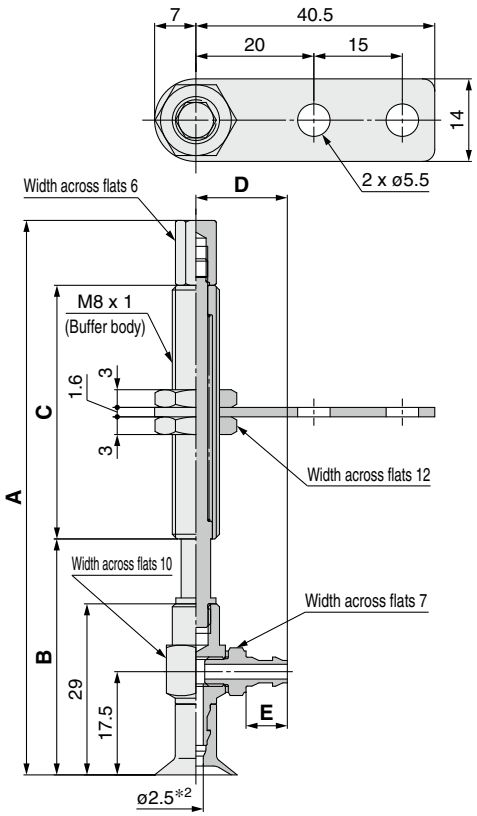

Construction	p. 116
Buffer Assembly	p. 126

ZPY ❶10 UT ❷N ❸J ❹6 – ❺N4 – ❻A8

❸ Buffer specification

J	Rotating
K	Non-rotating

❻ Connection thread (Male thread)

A8	M8 x 1

❺ Vacuum inlet (Barb fitting)

N4	For ø4 nylon tubing	M-5AN-4
N6	For ø6 nylon tubing	M-5AN-6
U4	For ø4 soft tubing	M-5AU-4
U6	For ø6 soft tubing	M-5AU-6

Model									A	B	C
	Vacuum inlet direction	❶ Pad dia.	Form	❷ *1 Material	❸ Buffer spec.	❹ Buffer stroke	❺ Vacuum inlet	❻ Connection thread			
ZP	Y	10 13 16	UT	N S U F GN GS	J K	6	N4 N6 U4 U6	A8	63	37	15
						10			94	40	43
						15			99	45	
						25			109	55	

Dimensions Per Vacuum Inlet

Model									D	E	Fitting part min. hole size
	Vacuum inlet direction	❶ Pad dia.	Form	❷ *1 Material	❸ Buffer spec.	❹ Buffer stroke	❺ Vacuum inlet	❻ Connection thread			
ZP	Y	10 13 16	UT	N S U F GN GS	J K	6 10 15 25	N4 U4	A8	13.5	5	ø1.8
							N6 U6		15.5	7	ø2.5

*1 N: NBR, S: Silicone rubber, U: Urethane rubber, F: FKM, GN: Conductive NBR, GS: Conductive silicone rubber

*2 Indicates the minimum hole size of the adapter or vacuum pad



Basic Pad

Thin Flat Type with Ribs

ZP Series



How to Order

		Dimensions/ Models	Construction	Mounting Bracket Assembly
Pad unit	ZP 10 CT N	p. **96**	p. **115**	From p. **121**
With adapter	ZP T 10 CT N – A5 –	From p. **96**	p. **115**	From p. **121**
With buffer	ZP T 10 CT N J 6 – B3 – A8	From p. **101**	p. **116**	From p. **124**

∗ Pad unit's sales unit: 10 pcs.

❶ ❷ ❸ ❹ ❺ ❻ ❼

● Thin flat type with ribs

❶ Vacuum inlet direction

Nil	Pad unit
T	Vertical
R	Lateral (With One-touch fitting)
Y	Lateral (With barb fitting)

❷ Pad diameter

10	ø10
13	ø13
16	ø16

❸ Material

N	NBR
S	Silicone rubber∗1
U	Urethane rubber
F	FKM
GN	Conductive NBR
GS	Conductive silicone rubber

∗1 Compliant with the FDA (USA Food and Drug Administration) regulation 21CFR§177.2600 for "Rubber articles intended for repeated use"

❹ Buffer specification

J	Rotating
K	Non-rotating

❺ Buffer stroke

Stroke [mm]	Pad diameter
	All sizes
6	●
10	●
15	●
25	●

With adapter

❻ Vacuum inlet

○: ZPT/Vertical ●: ZPR/Lateral (With One-touch fitting) △: ZPY/Lateral (With barb fitting)

Type	Symbol	Size	Pad diameter
			All sizes
Male thread	**A5**	M5 x 0.8	○
	A6	M6 x 1	○
Female thread	**B4**	M4 x 0.7	○
	B5	M5 x 0.8	○
One-touch fitting	**04**	ø4	●
	06	ø6	●
Barb fitting	**N4**	For ø4 nylon tubing	△
	N6	For ø6 nylon tubing	△
	U4	For ø4 soft tubing	△
	U6	For ø6 soft tubing	△

❼ Connection thread

●: ZPR/Lateral (With One-touch fitting) △: ZPY/Lateral (With barb fitting)

Type	Symbol	Size	Pad diameter
			All sizes
Male thread	**A5**	M5 x 0.8	●△
	A6	M6 x 1	●△
Female thread	**B4**	M4 x 0.7	●△
	B5	M5 x 0.8	●△

It is not necessary to select a connection thread for ○:ZPT/Vertical.
Use the vacuum inlet.

With buffer

❻ Vacuum inlet

○: ZPT/Vertical ●: ZPR/Lateral (With One-touch fitting) △: ZPY/Lateral (With barb fitting)

Type	Symbol	Size	Pad diameter
			All sizes
Female thread	**B3**	M3 x 0.5	○
	B5	M5 x 0.8	○
One-touch fitting	**04**	ø4	○●
	06	ø6	○●
Barb fitting	**N4**	For ø4 nylon tubing∗1	○△
	N6	For ø6 nylon tubing∗1	△
	U4	For ø4 soft tubing∗2	○△
	U6	For ø6 soft tubing∗2	△

∗1 Nylon tube piping
∗2 Soft nylon/Polyurethane tube piping

❼ Connection thread

○: ZPT/Vertical ●: ZPR/Lateral (With One-touch fitting) △: ZPY/Lateral (With barb fitting)

Type	Symbol	Size	Pad diameter
			All sizes
Male thread	**A8**	M8 x 1	○●△

∗ The pad, mounting nut, and buffer plate are shipped together but do not come assembled.

Dimensions/Models

Single unit ø10 to ø16

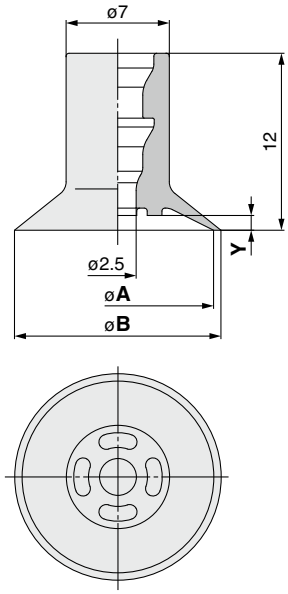

ZP 10 CT N
❶ ❷

Model				A	B	Y
	❶ Pad dia.	Form	❷ *1 Material			
ZP	10	CT	N S U F GN GS	10	11	0.8
	13			13	14	1
	16			16	17	

*1 N: NBR, S: Silicone rubber, U: Urethane rubber, F: FKM, GN: Conductive NBR, GS: Conductive silicone rubber

Construction	p. 115
Mounting Bracket Assembly	From p. 121

With adapter ø10 to ø16

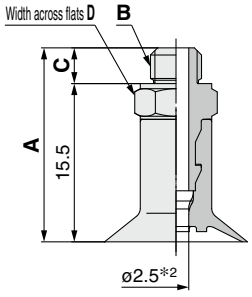

ZPT 10 CT N – A5
❶ ❷ ❸

❸ Vacuum inlet (Male thread)

A5	M5 x 0.8
A6	M6 x 1

Model						A	B	C	D
	Vacuum inlet direction	❶ Pad dia.	Form	❷ *1 Material	❸ Vacuum inlet				
ZP	T	10 13 16	CT	N S U F GN GS	A5	19	M5 x 0.8	3.5	7
					A6	20	M6 x 1	4.5	8

*1 N: NBR, S: Silicone rubber, U: Urethane rubber, F: FKM, GN: Conductive NBR, GS: Conductive silicone rubber
*2 Indicates the minimum hole size of the adapter or vacuum pad

Construction	p. 115
Adapter Assembly	p. 121

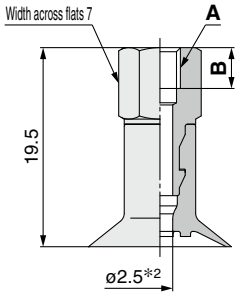

ZPT 10 CT N – B4
❶ ❷ ❸

❸ Vacuum inlet (Female thread)

B4	M4 x 0.7
B5	M5 x 0.8

Model						A	B
	Vacuum inlet direction	❶ Pad dia.	Form	❷ *1 Material	❸ Vacuum inlet		
ZP	T	10 13 16	CT	N S U F GN GS	B4	M4 x 0.7	4
					B5	M5 x 0.8	5

*1 N: NBR, S: Silicone rubber, U: Urethane rubber, F: FKM, GN: Conductive NBR, GS: Conductive silicone rubber
*2 Indicates the minimum hole size of the adapter or vacuum pad

Construction	p. 115
Adapter Assembly	p. 121

Dimensions/Models

With adapter/One-touch fitting ø10 to ø16

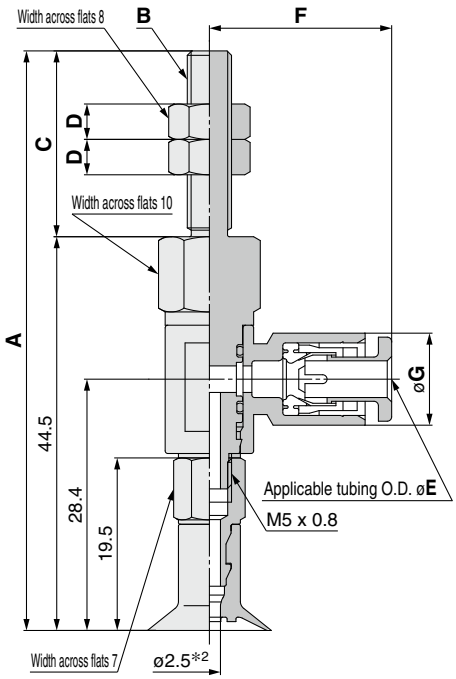

Construction	p. 115
Adapter Assembly	p. 122

ZPR 10 CT N – 04 – A5

❶ ❷ ❸ ❹

❸ **Vacuum inlet (One-touch fitting)**

04	ø4
06	ø6

❹ **Connection thread (Male thread)**

A5	M5 x 0.8
A6	M6 x 1

Model							A	B	C	D
	Vacuum inlet direction	❶ Pad dia.	Form	❷ Material *1	❸ Vacuum inlet	❹ Connection thread				
ZP	**R**	**10 13 16**	**CT**	**N S U F GN GS**	**04 06**	**A5**	65.5	M5 x 0.8	21	4
						A6	70.5	M6 x 1	26	3

Dimensions Per Vacuum Inlet

Model							E	F	G	Fitting part min. hole size
	Vacuum inlet direction	❶ Pad dia.	Form	❷ Material *1	❸ Vacuum inlet	❹ Connection thread				
ZP	**R**	**10 13 16**	**CT**	**N S U F GN GS**	**04**	**A5 A6**	4	20.6	10.4	ø3
					06		6	21.6	12.8	ø4

*1 N: NBR, S: Silicone rubber, U: Urethane rubber, F: FKM, GN: Conductive NBR, GS: Conductive silicone rubber

*2 Indicates the minimum hole size of the adapter or vacuum pad

Dimensions/Models

With adapter/One-touch fitting ø10 to ø16

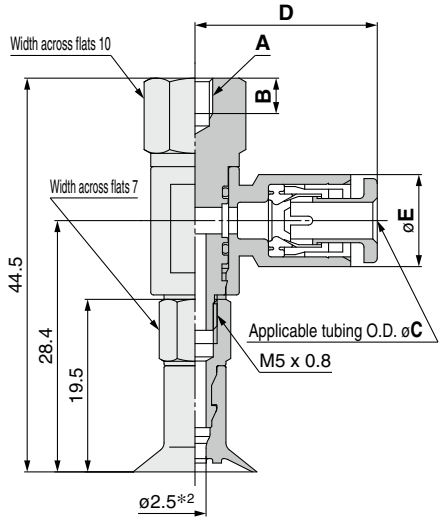

Construction	p. 115
Adapter Assembly	p. 122

ZPR 10 CT N – 04 – B4
❶ ❷ ❸ ❹

❸ **Vacuum inlet (One-touch fitting)**

04	ø4
06	ø6

❹ **Connection thread (Female thread)**

B4	M4 x 0.7
B5	M5 x 0.8

Model							A	B
	Vacuum inlet direction	❶ Pad dia.	Form	❷ Material *1	❸ Vacuum inlet	❹ Connection thread		
ZP	R	10 13 16	CT	N S U F GN GS	04 06	B4	M4 x 0.7	4
						B5	M5 x 0.8	5

Dimensions Per Vacuum Inlet

Model							C	D	E	Fitting part min. hole size
	Vacuum inlet direction	❶ Pad dia.	Form	❷ Material *1	❸ Vacuum inlet	❹ Connection thread				
ZP	R	10 13 16	CT	N S U F GN GS	04	B4 B5	4	20.6	10.4	ø3
					06		6	21.6	12.8	ø4

*1 N: NBR, S: Silicone rubber, U: Urethane rubber, F: FKM, GN: Conductive NBR, GS: Conductive silicone rubber
*2 Indicates the minimum hole size of the adapter or vacuum pad

Dimensions/Models

With adapter/barb fitting ø10 to ø16

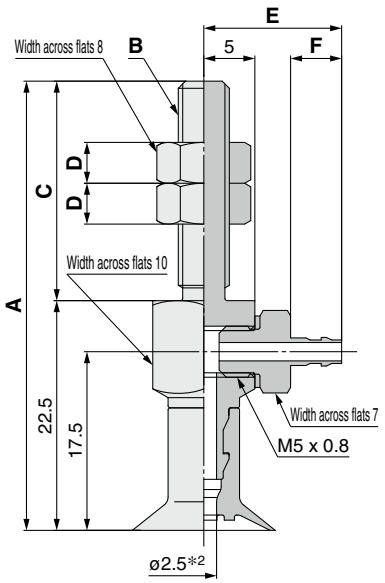

Construction	p. 115
Adapter Assembly	p. 123

ZPY 10 CT N – N4 – A5
❶ ❷ ❸ ❹

❸ Vacuum inlet (Barb fitting)

N4	For ø4 nylon tubing	M-5AN-4
N6	For ø6 nylon tubing	M-5AN-6
U4	For ø4 soft tubing	M-5AU-4
U6	For ø6 soft tubing	M-5AU-6

❹ Connection thread (Male thread)

A5	M5 x 0.8
A6	M6 x 1

Model							A	B	C	D
	Vacuum inlet direction	❶ Pad dia.	Form	❷ *1 Material	❸ Vacuum inlet	❹ Connection thread				
ZP	**Y**	**10 13 16**	**CT**	**N S U F GN GS**	**N4 N6 U4 U6**	**A5**	44	M5 x 0.8	21.5	4
						A6	49.5	M6 x 1	27	3

Dimensions Per Vacuum Inlet

Model							E	F	Fitting part min. hole size
	Vacuum inlet direction	❶ Pad dia.	Form	❷ *1 Material	❸ Vacuum inlet	❹ Connection thread			
ZP	**Y**	**10 13 16**	**CT**	**N S U F GN GS**	**N4 U4**	**A5 A6**	13.5	5	ø1.8
					N6 U6		15.5	7	ø2.5

*1 N: NBR, S: Silicone rubber, U: Urethane rubber, F: FKM, GN: Conductive NBR, GS: Conductive silicone rubber
*2 Indicates the minimum hole size of the adapter or vacuum pad

Dimensions/Models

With adapter/barb fitting ø10 to ø16

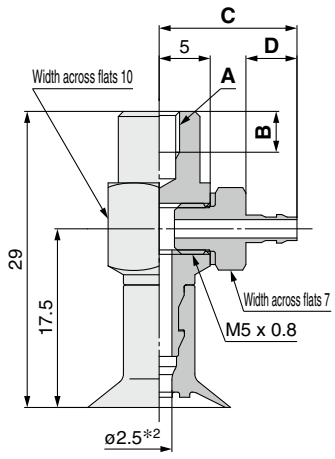

Construction	p. 115
Adapter Assembly	p. 123

ZPY 10 CT N – N4 – B4
❶ ❷ ❸ ❹

❸ **Vacuum inlet (Barb fitting)**

N4	For ø4 nylon tubing	M-5AN-4
N6	For ø6 nylon tubing	M-5AN-6
U4	For ø4 soft tubing	M-5AU-4
U6	For ø6 soft tubing	M-5AU-6

❹ **Connection thread (Female thread)**

B4	M4 x 0.7
B5	M5 x 0.8

Model							A	B
	Vacuum inlet direction	❶ Pad dia.	Form	❷ Material *1	❸ Vacuum inlet	❹ Connection thread		
ZP	**Y**	**10 13 16**	**CT**	**N S U F GN GS**	**N4 N6 U4 U6**	**B4**	M4 x 0.7	4
						B5	M5 x 0.8	5

Dimensions Per Vacuum Inlet

Model							C	D	Fitting part min. hole size
	Vacuum inlet direction	❶ Pad dia.	Form	❷ Material *1	❸ Vacuum inlet	❹ Connection thread			
ZP	**Y**	**10 13 16**	**CT**	**N S U F GN GS**	**N4 U4**	**B4 B5**	13.5	5	ø1.8
					N6 U6		15.5	7	ø2.5

*1 N: NBR, S: Silicone rubber, U: Urethane rubber, F: FKM, GN: Conductive NBR, GS: Conductive silicone rubber
*2 Indicates the minimum hole size of the adapter or vacuum pad

Dimensions/Models

With buffer ø10 to ø16

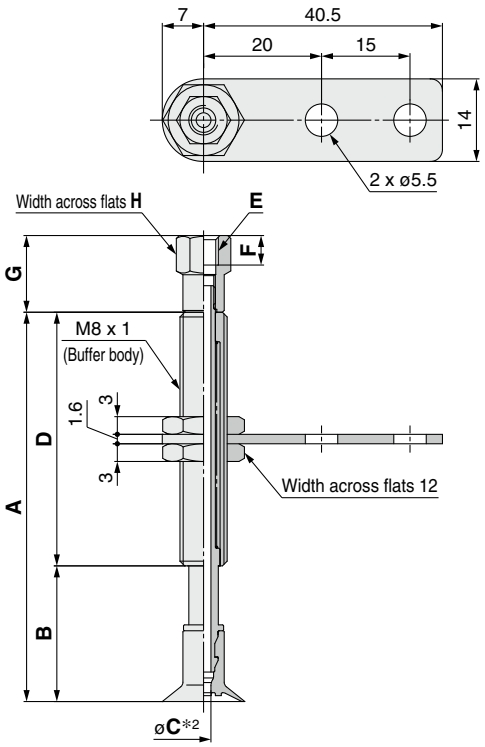

ZPT 10 CT N J 6 – B3 – A8
❶ ❷ ❸ ❹ ❺ ❻

❸ Buffer specification

J	Rotating
K	Non-rotating

❻ Connection thread (Male thread)

A8	M8 x 1

❺ Vacuum inlet

B3	M3 x 0.5	Female thread	
B5	M5 x 0.8		
04	ø4	One-touch fitting	KQ2H04-M5N
06	ø6		KQ2H06-M5N
N4	For ø4 nylon tubing	Barb fitting	
U4	For ø4 soft tubing		

Model									A	B	C*2	D
	Vacuum inlet direction	❶ Pad dia.	Form	❷ *1 Material	❸ Buffer spec.	❹ Buffer stroke	❺ Vacuum inlet	❻ Connection thread				
ZP	T	10 13 16	CT	N S U F GN GS	J K	6	B3 B5 04 06 N4 U4	A8	33	18	J: 2.5 K: 2	15
						10			66	23		43
						15			71	28		
						25			81	38		

Dimensions Per Vacuum Inlet: Female Thread

Model									E	F	G	H
	Vacuum inlet direction	❶ Pad dia.	Form	❷ *1 Material	❸ Buffer spec.	❹ Buffer stroke	❺ Vacuum inlet	❻ Connection thread				
ZP	T	10 13 16	CT	N S U F GN GS	J K	6 10 15 25	B3	A8	M3 x 0.5	3	11	6
							B5		M5 x 0.8	5	13	8

Dimensions Per Vacuum Inlet: One-touch Fitting

Model									G	H	J	Fitting part min. hole size
	Vacuum inlet direction	❶ Pad dia.	Form	❷ *1 Material	❸ Buffer spec.	❹ Buffer stroke	❺ Vacuum inlet	❻ Connection thread				
ZP	T	10 13 16	CT	N S U F GN GS	J K	6 10 15 25	04	A8	27.7	8	4	ø2.5
							06			10	6	

Dimensions Per Vacuum Inlet: Barb Fitting

Model									G	H	Fitting part min. hole size
	Vacuum inlet direction	❶ Pad dia.	Form	❷ *1 Material	❸ Buffer spec.	❹ Buffer stroke	❺ Vacuum inlet	❻ Connection thread			
ZP	T	10 13 16	CT	N S U F GN GS	J K	6 10 15 25	N4	A8	14	6	ø1.8
							U4				

*1 N: NBR, S: Silicone rubber, U: Urethane rubber, F: FKM, GN: Conductive NBR, GS: Conductive silicone rubber
*2 Indicates the minimum hole size of the adapter or vacuum pad

Vacuum inlet: One-touch fitting

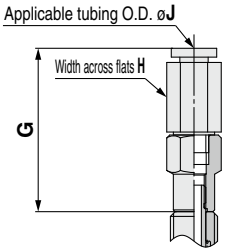

Vacuum inlet: Barb fitting

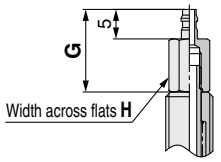

Construction	p. 116
Buffer Assembly	p. 124

Dimensions/Models

With buffer/One-touch fitting ø10 to ø16

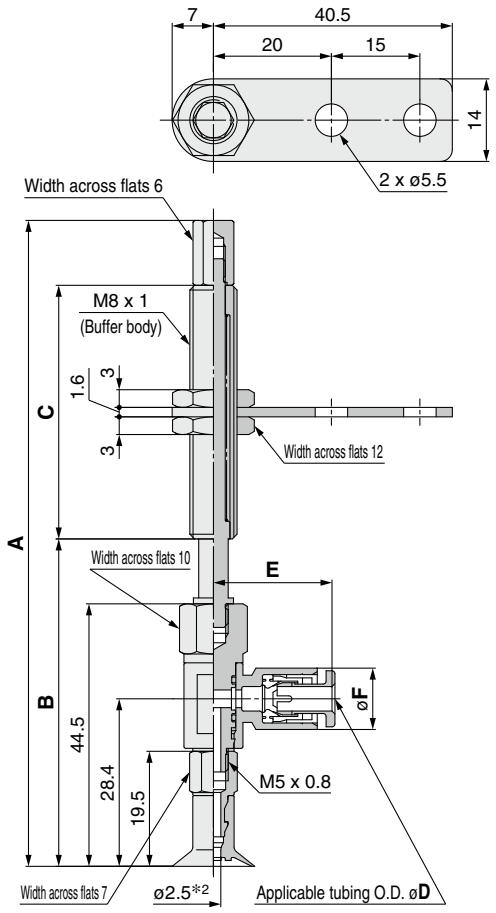

ZPR 10 CT N J 6 - 04 - A8
❶ ❷ ❸ ❹ ❺ ❻

❸ Buffer specification

J	Rotating
K	Non-rotating

❻ Connection thread (Male thread)

A8	M8 x 1

❺ Vacuum inlet (One-touch fitting)

04	ø4
06	ø6

Model									A	B	C
	Vacuum inlet direction	❶ Pad dia.	Form	❷ *1 Material	❸ Buffer spec.	❹ Buffer stroke	❺ Vacuum inlet	❻ Connection thread			
ZP	R	10 13 16	CT	N S U F GN GS	J K	6	04 06	A8	78.5	52.5	15
						10			109.5	55.5	43
						15			114.5	60.5	
						25			124.5	70.5	

Dimensions Per Vacuum Inlet

Model									D	E	F	Fitting part min. hole size
	Vacuum inlet direction	❶ Pad dia.	Form	❷ *1 Material	❸ Buffer spec.	❹ Buffer stroke	❺ Vacuum inlet	❻ Connection thread				
ZP	R	10 13 16	CT	N S U F GN GS	J K	6 10 15 25	04	A8	4	20.6	10.4	ø3
							06		6	21.6	12.8	ø4

*1 N: NBR, S: Silicone rubber, U: Urethane rubber, F: FKM, GN: Conductive NBR, GS: Conductive silicone rubber
*2 Indicates the minimum hole size of the adapter or vacuum pad

Construction	p. 116
Buffer Assembly	p. 125

Dimensions/Models

With buffer/barb fitting ø10 to ø16

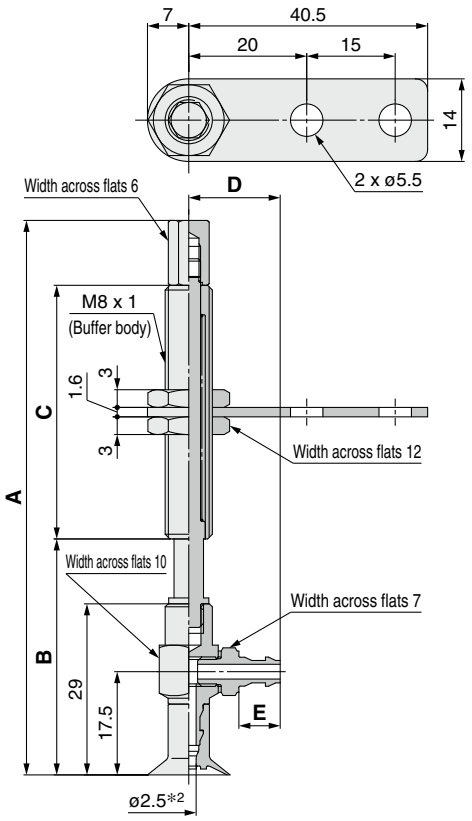

Construction	p. 116
Buffer Assembly	p. 126

ZPY 10 CT N J 6 – N4 – A8
❶ ❷ ❸ ❹ ❺ ❻

❸ Buffer specification

J	Rotating
K	Non-rotating

❻ Connection thread (Male thread)

A8	M8 x 1

❺ Vacuum inlet (Barb fitting)

N4	For ø4 nylon tubing	M-5AN-4
N6	For ø6 nylon tubing	M-5AN-6
U4	For ø4 soft tubing	M-5AU-4
U6	For ø6 soft tubing	M-5AU-6

Model									A	B	C
	Vacuum inlet direction	❶ Pad dia.	Form	❷ *1 Material	❸ Buffer spec.	❹ Buffer stroke	❺ Vacuum inlet	❻ Connection thread			
ZP	Y	10 13 16	CT	N S U F GN GS	J K	6	N4 N6 U4 U6	A8	63	37	15
						10			94	40	43
						15			99	45	
						25			109	55	

Dimensions Per Vacuum Inlet

Model									D	E	Fitting part min. hole size
	Vacuum inlet direction	❶ Pad dia.	Form	❷ *1 Material	❸ Buffer spec.	❹ Buffer stroke	❺ Vacuum inlet	❻ Connection thread			
ZP	Y	10 13 16	CT	N S U F GN GS	J K	6 10 15 25	N4 U4	A8	13.5	5	ø1.8
							N6 U6		15.5	7	ø2.5

*1 N: NBR, S: Silicone rubber, U: Urethane rubber, F: FKM, GN: Conductive NBR, GS: Conductive silicone rubber
*2 Indicates the minimum hole size of the adapter or vacuum pad



Basic Pad
Deep Type
ZP Series




How to Order

		Dimensions/ Models	Construction	Mounting Bracket Assembly
Pad unit	ZP 10 D N – ☐	p. **105**	p. **117**	From p. **121**
With adapter	ZP T 10 D N – A5 – ☐	From p. **105**	p. **117**	From p. **121**
With buffer	ZP T 10 D N J 10 – B5 – A10	From p. **111**	p. **118**	From p. **124**

∗ Pad unit's sales unit: 10 pcs.

❶ Deep type ❷ ❸ ❹ ❺ ❻ ❼ ❽

❶ Vacuum inlet direction

Nil	Pad unit
T	Vertical
R	Lateral (With One-touch fitting)
Y	Lateral (With barb fitting)

❷ Pad diameter

10	ø10
16	ø16
25	ø25
40	ø40

❸ Material

N	NBR
S	Silicone rubber∗1
U	Urethane rubber
F	FKM
GN	Conductive NBR
GS	Conductive silicone rubber

❹ Buffer specification

J	Rotating
K	Non-rotating

❺ Buffer stroke

Stroke [mm]	Pad diameter [mm]			
	ø10	ø16	ø25	ø40
10	●	●	●	●
20	●	●	●	●
30	●	●	●	●
40	●	●	●	—
50	●	●	●	●

∗1 Compliant with the FDA (USA Food and Drug Administration) regulation 21CFR§177.2600 for "Rubber articles intended for repeated use"

With adapter

❻ Vacuum inlet

○: ZPT/Vertical ●: ZPR/Lateral (With One-touch fitting) △: ZPY/Lateral (With barb fitting)

Type	Symbol	Size	Pad diameter [mm]		
			ø10, ø16	ø25	ø40
Male thread	**A5**	M5 x 0.8	○	—	—
	A6	M6 x 1	○	○	○
	A8	M8 x 1	—	○	○
Female thread	**B5**	M5 x 0.8	○	○	—
	B6	M6 x 1	○	○	○
	B8	M8 x 1.25	—	○	○
	B01	Rc1/8	○	○	○
	N01	NPT1/8	○	○	○
	T01	NPTF1/8	○	○	○
One-touch fitting	**04**	ø4	●	●	—
	06	ø6	●	●	●
	08	ø8	—	●	●
Barb fitting	**N4**	For ø4 nylon tubing	△	△	—
	N6	For ø6 nylon tubing	△	△	△
	U4	For ø4 soft tubing	△	△	—
	U6	For ø6 soft tubing	△	△	△

❼ Connection thread

●: ZPR/Lateral (With One-touch fitting) △: ZPY/Lateral (With barb fitting)

Type	Symbol	Size	Pad diameter [mm]		
			ø10, ø16	ø25	ø40
Male thread	**A5**	M5 x 0.8	●△	—	—
	A6	M6 x 1	●△	●△	●△
	A8	M8 x 1	—	●△	●△
Female thread	**B5**	M5 x 0.8	●△	●△	—
	B6	M6 x 1	●△	●△	●△
	B8	M8 x 1.25	—	●△	●△

It is not necessary to select a connection thread for ○:ZPT/Vertical. Use the vacuum inlet.

With buffer

❻ Vacuum inlet

○: ZPT/Vertical ●: ZPR/Lateral (With One-touch fitting) △: ZPY/Lateral (With barb fitting)

Type	Symbol	Size	Pad diameter [mm]		
			ø10, ø16	ø25	ø40
Female thread	**B5**	M5 x 0.8	○	○	○
	B01	Rc1/8	—	—	○
	N01	NPT1/8	—	—	○
	T01	NPTF1/8	—	—	○
One-touch fitting	**04**	ø4	○●	○●	—
	06	ø6	○●	○●	○●
	08	ø8	—	●	○●
Barb fitting	**N4**	For ø4 nylon tubing∗1	△	△	—
	N6	For ø6 nylon tubing∗1	○△	○△	○△
	U4	For ø4 soft tubing∗2	△	△	—
	U6	For ø6 soft tubing∗2	○△	○△	○△

∗1 Nylon tube piping
∗2 Soft nylon/Polyurethane tube piping

❼ Connection thread

○: ZPT/Vertical ●: ZPR/Lateral (With One-touch fitting) △: ZPY/Lateral (With barb fitting)

Type	Symbol	Size	Pad diameter [mm]		
			ø10, ø16	ø25	ø40
Male thread	**A10**	M10 x 1	○●△	○●△	—
	A14	M14 x 1	—	—	○●△

❽ Lock ring

Symbol	Pad diameter
	All sizes
Nil	With lock ring
X19	Without lock ring

Lock ring unit

Part no.	Pad diameter [mm]
ZPL1	ø10, ø16
ZPL2	ø25
ZPL3	ø40

∗ The pad, lock ring, mounting nut, fitting, and buffer plate are shipped together but do not come assembled.

Dimensions/Models

Single unit ø10 to ø40

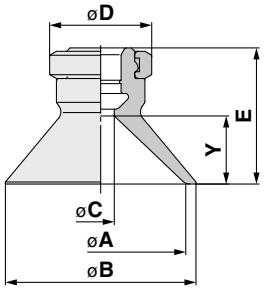

Construction	p. 117
Mounting Bracket Assembly	From p. 121

ZP ❶10 D ❷N

Model				A	B	C	D	E	Y
	❶ Pad dia.	Form	❷ *1 Material						
ZP	10	D	N S U F GN GS	10	12	4	13	15	6
	16			16	18			16	7
	25			25	28		15	20	10
	40			40	43	7	18	29	17

*1 N: NBR, S: Silicone rubber, U: Urethane rubber, F: FKM, GN: Conductive NBR, GS: Conductive silicone rubber

With adapter ø10 to ø40

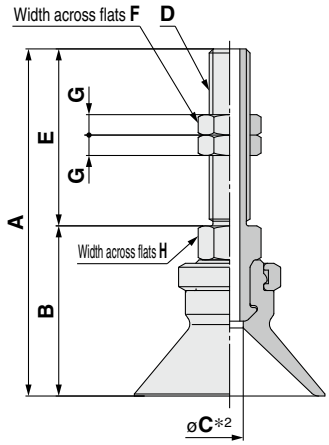

Construction	p. 117
Adapter Assembly	p. 121

ZPT ❶10 D ❷N – A5

❸ **Vacuum inlet (Male thread)**

A5	M5 x 0.8
A6	M6 x 1
A8	M8 x 1

Model						A	B	C*2	D	E	F	G	H
	Vacuum inlet direction	❶ Pad dia.	Form	❷ *1 Material	❸ Vacuum inlet								
ZP	T	10	D	N S U F GN GS	A5	41	20	2.5	M5 x 0.8	21	8	4	8
		16				42	21						
		10			A6	46	20	2.5	M6 x 1	26	8	3	8
		16				47	21						
		25				51	25	3					
		40				61	35.5						12
		25			A8	46	30	3.5	M8 x 1	16	12	3	12
		40				51	35.5	4.5					

*1 N: NBR, S: Silicone rubber, U: Urethane rubber, F: FKM, GN: Conductive NBR, GS: Conductive silicone rubber
*2 Indicates the minimum hole size of the adapter or vacuum pad

Recommended Gasket Part Nos.

Part no.	**D** vacuum inlet (Male thread)
WCS5X0.8	M5 x 0.8
WCS6X1	M6 x 1
WCS8X1	M8 x 1

Dimensions/Models

With adapter ø10 to ø40

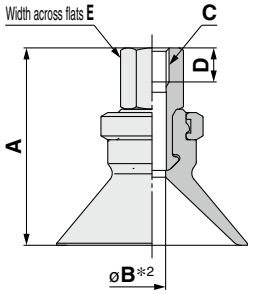

Construction	p. 117
Adapter Assembly	p. 121

ZPT 10 D N – B5
❶ ❷ ❸

❸ **Vacuum inlet (Female thread)**

B5	M5 x 0.8
B6	M6 x 1
B8	M8 x 1.25
B01	Rc1/8
N01	NPT1/8
T01	NPTF1/8

Model						A	B*2	C	D	E
	Vacuum inlet direction	❶ Pad dia.	Form	❷ *1 Material	❸ Vacuum inlet					
ZP	T	10	D	N S U F GN GS	B5	24	2.5	M5 x 0.8	5	8
		16				25				
		25				29	4			
		10			B6	24	2.5	M6 x 1	6	8
		16				25				
		25				29	4			
		40				42.5	4.9			12
		25			B8	35	3.5	M8 x 1.25	8	12
		40				42.5	6.6			
		10			B01 N01 T01	30	2.5	Rc1/8 NPT1/8 NPTF1/8	—	12
		16				31				
		25				35	3.5			
		40				42.5	7			

*1 N: NBR, S: Silicone rubber, U: Urethane rubber, F: FKM, GN: Conductive NBR, GS: Conductive silicone rubber

*2 Indicates the minimum hole size of the adapter or vacuum pad

Dimensions/Models

With adapter/One-touch fitting ø10 to ø40

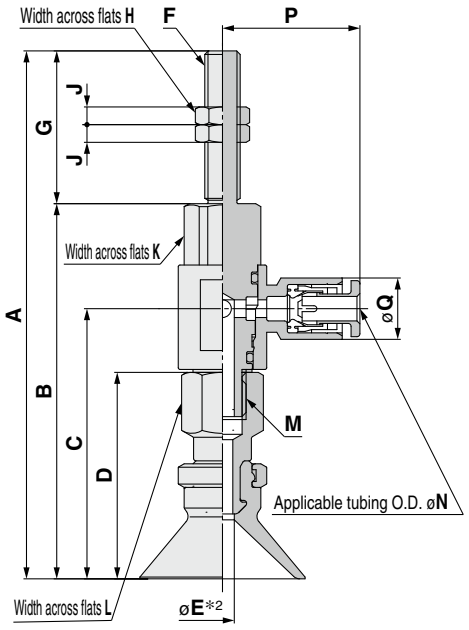

Construction	p. 117
Adapter Assembly	p. 122

ZPR 10 D N – 04 – A5

❶ ❷ ❸ ❹

❸ **Vacuum inlet (One-touch fitting)**

04	ø4
06	ø6
08	ø8

❹ **Connection thread (Male thread)**

A5	M5 x 0.8
A6	M6 x 1
A8	M8 x 1

Model							A	B	C	D	*2 E	F	G	H	J	K	L	M
	Vacuum inlet direction	❶ Pad dia.	Form	❷ *1 Material	❸ Vacuum inlet	❹ Connection thread												
ZP	R	10	D	N S U F GN GS	04 06 08	A5	70	49	32.9	24	2.5	M5 x 0.8	21	8	4	10	8	M5 x 0.8
		16					71	50	33.9	25								
		10				A6	75	49	32.9	24	2.5	M6 x 1	26	8	3	10	8	M5 x 0.8
		16					76	50	33.9	25								
		25					89.5	63.6	45.8	35	3.5					12	12	M8 x 1.25
		40					97	71.1	53.3	42.5	4							
		25				A8	79.5	63.6	45.8	35	3.5	M8 x 1	16	12	3	12	12	M8 x 1.25
		40					87	71.1	53.3	42.5	4							

Dimensions Per Vacuum Inlet

Model							N	P	Q	Fitting part min. hole size
	Vacuum inlet direction	❶ Pad dia.	Form	❷ *1 Material	❸ Vacuum inlet	❹ Connection thread				
ZP	R	10	D	N S U F GN GS	04	A5	4	20.6	10.4	ø3
		16			06	A6	6	21.6	12.8	ø4
		25			04	A6 A8	4	23.3	10.4	ø3
					06		6	24.3	12.8	ø4.5
					08		8	26.2	15.2	ø6
		40			06		6	24.3	12.8	ø4.5
					08		8	26.2	15.2	ø6

*1 N: NBR, S: Silicone rubber, U: Urethane rubber, F: FKM, GN: Conductive NBR, GS: Conductive silicone rubber

*2 Indicates the minimum hole size of the adapter or vacuum pad

Dimensions/Models

With adapter/One-touch fitting ø10 to ø40

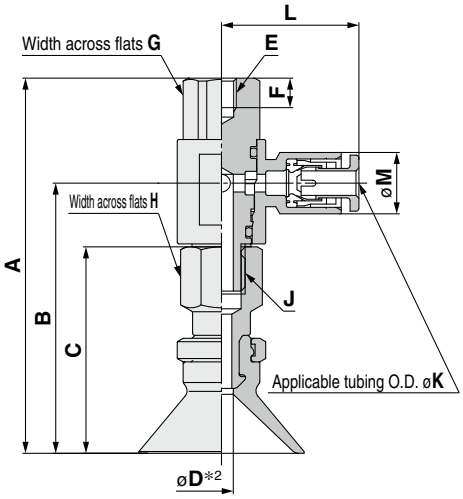

Construction	p. 117
Adapter Assembly	p. 122

ZPR 10 D N – 04 – B5
❶ ❷ ❸ ❹

❸ **Vacuum inlet (One-touch fitting)**

04	ø4
06	ø6
08	ø8

❹ **Connection thread (Female thread)**

B5	M5 x 0.8
B6	M6 x 1
B8	M8 x 1.25

Model							A	B	C	*2 D	E	F	G	H	J
Vacuum inlet direction		❶ Pad dia.	Form	❷ *1 Material	❸ Vacuum inlet	❹ Connection thread									
ZP	R	10	D	N S U F GN GS	04 06 08	B5	49	32.9	24	2.5	M5 x 0.8	5	10	8	M5 x 0.8
		16					50	33.9	25						
		25					63.6	45.8	35	3.5			12	12	M8 x 1.25
		10				B6	49	32.9	24	2.5	M6 x 1	6	10	8	M5 x 0.8
		16					50	33.9	25						
		25					63.6	45.8	35	3.5			12	12	M8 x 1.25
		40					71.1	53.3	42.5	4					
		25				B8	63.6	45.8	35	3.5	M8 x 1.25	8	12	12	M8 x 1.25
		40					71.1	53.3	42.5	4					

Dimensions Per Vacuum Inlet

Model							K	L	M	Fitting part min. hole size
Vacuum inlet direction		❶ Pad dia.	Form	❷ *1 Material	❸ Vacuum inlet	❹ Connection thread				
ZP	R	10	D	N S U F GN GS	04	B5	4	20.6	10.4	ø3
		16			06	B6	6	21.6	12.8	ø4
		25			04	B5	4	23.3	10.4	ø3
					06	B6	6	24.3	12.8	ø4.5
					08	B8	8	26.2	15.2	ø6
		40			06	B6	6	24.3	12.8	ø4.5
					08	B8	8	26.2	15.2	ø6

*1 N: NBR, S: Silicone rubber, U: Urethane rubber, F: FKM, GN: Conductive NBR, GS: Conductive silicone rubber
*2 Indicates the minimum hole size of the adapter or vacuum pad

Dimensions/Models

With adapter/barb fitting ø10 to ø40

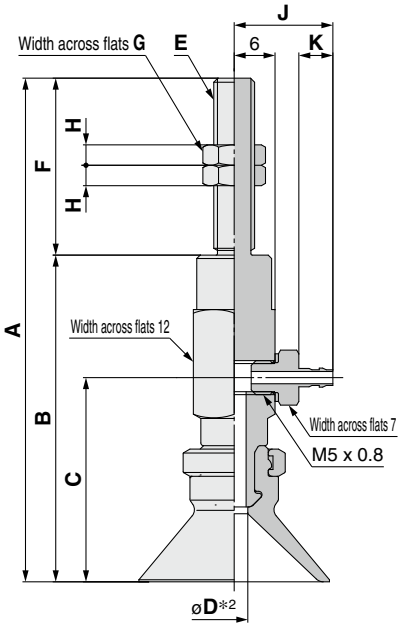

Construction	p. 117
Adapter Assembly	p. 123

ZPY 10 D N – N4 – A5
❶ ❷ ❸ ❹

❸ Vacuum inlet (Barb fitting)

N4	For ø4 nylon tubing	M-5AN-4
N6	For ø6 nylon tubing	M-5AN-6
U4	For ø4 soft tubing	M-5AU-4
U6	For ø6 soft tubing	M-5AU-6

❹ Connection thread (Male thread)

A5	M5 x 0.8
A6	M6 x 1
A8	M8 x 1

Model							A	B	C	D*2	E	F	G	H
	Vacuum inlet direction	❶ Pad dia.	Form	❷ *1 Material	❸ Vacuum inlet	❹ Connection thread								
ZP	Y	10	D	N S U F GN GS	N4 N6 U4 U6	A5	62	41	25	2.5	M5 x 0.8	21	8	4
		16					63	42	26					
		10				A6	67	41	25	2.5	M6 x 1	26	8	3
		16					68	42	26					
		25					74	48	30	3.5				
		40					83	57	39	6				
		25				A8	64	48	30	3.5	M8 x 1	16	12	3
		40					73	57	39	6				

Dimensions Per Vacuum Inlet

Model							J	K	Fitting part min. hole size
	Vacuum inlet direction	❶ Pad dia.	Form	❷ *1 Material	❸ Vacuum inlet	❹ Connection thread			
ZP	Y	10 16 25	D	N S U F GN GS	N4 U4	A5 A6	14.5	5	ø1.8
					N6 U6		16.5	7	ø2.5
		40			N6 U6	A6 A8	16.5	7	ø2.5

*1 N: NBR, S: Silicone rubber, U: Urethane rubber, F: FKM, GN: Conductive NBR, GS: Conductive silicone rubber
*2 Indicates the minimum hole size of the adapter or vacuum pad

Dimensions/Models

With adapter/barb fitting ø10 to ø40

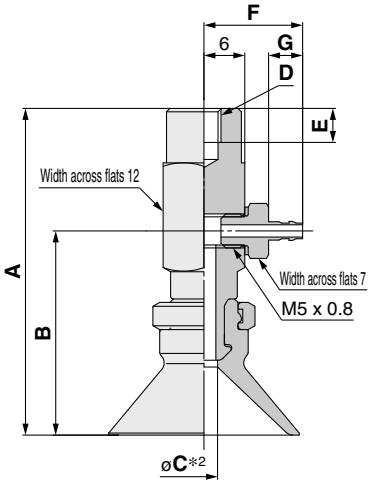

Construction	p. 117
Adapter Assembly	p. 123

ZPY 10 D N – N4 – B5
❶ ❷ ❸ ❹

❸ Vacuum inlet (Barb fitting)

N4	For ø4 nylon tubing	M-5AN-4
N6	For ø6 nylon tubing	M-5AN-6
U4	For ø4 soft tubing	M-5AU-4
U6	For ø6 soft tubing	M-5AU-6

❹ Connection thread (Female thread)

B5	M5 x 0.8
B6	M6 x 1
B8	M8 x 1.25

Model							A	B	C*2	D	E
	Vacuum inlet direction	❶ Pad dia.	Form	❷ *1 Material	❸ Vacuum inlet	❹ Connection thread					
ZP	Y	10	D	NSUFGNGS	N4 N6 U4 U6	B5	41	25	2.5	M5 x 0.8	5
		16					42	26			
		25					48	30	3.5		
		10				B6	41	25	2.5	M6 x 1	6
		16					42	26			
		25					48	30	3.5		
		40					57	39	6		
		25				B8	48	30	3.5	M8 x 1.25	8
		40					57	39	6		

Dimensions Per Vacuum Inlet

Model							F	G	Fitting part min. hole size
	Vacuum inlet direction	❶ Pad dia.	Form	❷ *1 Material	❸ Vacuum inlet	❹ Connection thread			
ZP	Y	10 16	D	NSUFGNGS	N4 U4	B4 B5	14.5	5	ø1.8
					N6 U6		16.5	7	ø2.5
		25			N4 U4	B5 B6 B8	14.5	5	ø1.8
					N6 U6		16.5	7	ø2.5
		40			N6 U6	B6 B8	16.5	7	ø2.5

*1 N: NBR, S: Silicone rubber, U: Urethane rubber, F: FKM, GN: Conductive NBR, GS: Conductive silicone rubber

*2 Indicates the minimum hole size of the adapter or vacuum pad

Dimensions/Models

With buffer ø10 to ø40

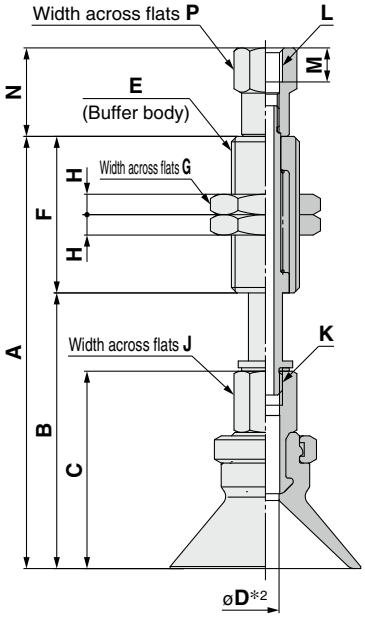

Construction	p. 118
Buffer Assembly	p. 124

ZPT 10 D N J 10 – B5 – A10
❶ ❷ ❸ ❹ ❺ ❻

❸ Buffer specification

J	Rotating
K	Non-rotating

❻ Connection thread (Male thread)

A10	M10 x 1
A14	M14 x 1

❺ Vacuum inlet (Female thread)

B5	M5 x 0.8
B01	Rc1/8
N01	NPT1/8
T01	NPTF1/8

Model									A	B	C	D*2	E	F	G	H	J	K
	Vacuum inlet direction	❶ Pad dia.	Form	❷ *1 Material	❸ Buffer spec.	❹ Buffer stroke	❺ Vacuum inlet	❻ Connection thread										
ZP	T	10	D	N S U F GN GS	J K	10	B5 04 06 N6 U6	A10	58.5	35.5	24	J: 2.5 K: 2	M10 x 1	23	14	3	8	M5 x 0.8
						20			96.5	45.5				51				
						30			106.5	55.5								
						40			142.5	65.5				77				
						50			152.5	75.5								
		16				10			59.5	36.5	25			23				
						20			97.5	46.5				51				
						30			107.5	56.5								
						40			143.5	66.5				77				
						50			153.5	76.5								
		25				10			63.5	40.5	29			23				
						20			101.5	50.5				51				
						30			111.5	60.5								
						40			147.5	70.5				77				
						50			157.5	80.5								
		40				10	B5 B01 N01 T01 06 08 N6 U6	A14	105	55	42.5	4	M14 x 1	50	19	5	12	M8 x 1.25
						20			115	65								
						30			125	75								
						50			170	95				75				

Dimensions Per Vacuum Inlet: Female Thread

Model									L	M	N	P
	Vacuum inlet direction	❶ Pad dia.	Form	❷ *1 Material	❸ Buffer spec.	❹ Buffer stroke	❺ Vacuum inlet	❻ Connection thread				
ZP	T	10 16 25	D	N S U F GN GS	J K	10 20 30 40 50	B5	A10	M5 x 0.8	5	13	8
		40				10	B5	A14	M5 x 0.8	4.5	15	10
						20 30 50				5	9	
						10	B01 N01 T01		Rc1/8 NPT1/8 NPTF1/8		16.5	13
						20 30 50					12	

*1 N: NBR, S: Silicone rubber, U: Urethane rubber, F: FKM, GN: Conductive NBR, GS: Conductive silicone rubber

*2 Indicates the minimum hole size of the adapter or vacuum pad

Dimensions/Models

With buffer ø10 to ø40

ZPT 10 D N J 10 – 04 – A10
❶ ❷ ❸ ❹ ❺ ❻

❸ Buffer specification

J	Rotating
K	Non-rotating

❻ Connection thread (Male thread)

A10	M10 x 1
A14	M14 x 1

❺ Vacuum inlet

			Pad diameter	
			ø10 to ø25	ø40
04	ø4	One-touch fitting	KQ2H04-M5N	
06	ø6		KQ2H06-M5N	KQ2H06-01NS
08	ø8			KQ2H08-01NS
N6	For ø6 nylon tubing	Barb fitting		
U6	For ø6 soft tubing			

Vacuum inlet: One-touch fitting

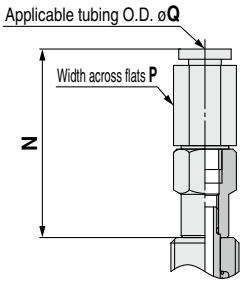

Vacuum inlet: Barb fitting

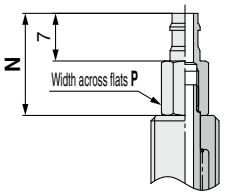

Construction	p. 118
Buffer Assembly	p. 124

Dimensions Per Vacuum Inlet: One-touch Fitting

Model									N	P	Q	Fitting part min. hole size
	Vacuum inlet direction	❶ Pad dia.	Form	❷ *1 Material	❸ Buffer spec.	❹ Buffer stroke	❺ Vacuum inlet	❻ Connection thread				
ZP	T	10, 16, 25	D	N, S, U, F, GN, GS	J, K	10, 20, 30, 40, 50	04	A10	27.7	8	4	ø2.5
							06			10	6	
		40				10	06	A14	31.8	10	6	ø4.5
							08		35.9	14	8	ø6
						20, 30, 50	06		19.9	12	6	ø3
							08		24.9	14	8	

Dimensions Per Vacuum Inlet: Barb Fitting

Model									N	P	Fitting part min. hole size
	Vacuum inlet direction	❶ Pad dia.	Form	❷ *1 Material	❸ Buffer spec.	❹ Buffer stroke	❺ Vacuum inlet	❻ Connection thread			
ZP	T	10, 16, 25	D	N, S, U, F, GN, GS	J, K	10, 20, 30, 40, 50	N6	A10	15	6	ø2.5
							U6				
		40				10	N6	A14	19	10	
							U6				
						20, 30, 50	N6		12		
							U6				

*1 N: NBR, S: Silicone rubber, U: Urethane rubber, F: FKM, GN: Conductive NBR, GS: Conductive silicone rubber

Dimensions/Models

With buffer/One-touch fitting ø10 to ø40

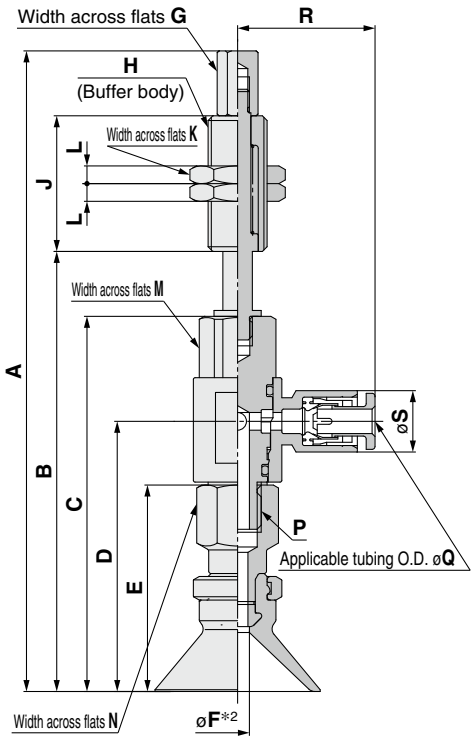

Construction	p. 118
Buffer Assembly	p. 125

ZPR 10 D N J 10 - 04 - A10

❶ ❷ ❸ ❹ ❺ ❻

❸ Buffer specification

J	Rotating
K	Non-rotating

❻ Connection thread (Male thread)

A10	M10 x 1
A14	M14 x 1

❺ Vacuum inlet (One-touch fitting)

04	ø4
06	ø6
08	ø8

Model									A	B	C	D	E	*2 F	G	H	J	K	L	M	N	P
	Vacuum inlet direction	❶ Pad dia.	Form	❷ *1 Material	❸ Buffer spec.	❹ Buffer stroke	❺ Vacuum inlet	❻ Connection thread														
ZP	R	10	D	N S U F GN GS	J K	10	04 06	A10	94	60	49	32.9	24	2.5	6	M10 x 1	23	14	3	10	8	M5 x 0.8
						20			132	70							51					
						30			142	80												
						40			178	90							77					
						50			188	100												
		16				10			95	61	50	33.9	25				23					
						20			133	71							51					
						30			143	81												
						40			179	91							77					
						50			189	101												
		25				10	04 06 08		108.6	74.6	63.6	45.8	35	3.5			23			12	12	M8 x 1.25
						20			146.6	84.6							51					
						30			156.6	94.6												
						40			192.6	104.6							77					
						50			202.6	114.6												
		40				10	06 08	A14	151.1	83.1	71.1	53.3	42.5	4	10	M14 x 1	50	19	5	12	12	M8 x 1.25
						20			148.1	93.1												
						30			158.1	103.1												
						50			203.1	123.1							75					

Dimensions Per Vacuum Inlet

Model									Q	R	S	Fitting part min. hole size
	Vacuum inlet direction	❶ Pad dia.	Form	❷ *1 Material	❸ Buffer spec.	❹ Buffer stroke	❺ Vacuum inlet	❻ Connection thread				
ZP	R	10 16	D	N S U F GN GS	J K	10 20 30 40 50	04	A10	4	20.6	10.4	ø3
							06		6	21.6	12.8	ø4
		25				10 20 30 40 50	04		4	23.3	10.4	ø3
							06		6	24.3	12.8	ø4.5
							08		8	26.2	15.2	ø6
		40				10 20 30 50	06	A14	6	24.3	12.8	ø4.5
							08		8	26.2	15.2	ø6

*1 N: NBR, S: Silicone rubber, U: Urethane rubber, F: FKM, GN: Conductive NBR, GS: Conductive silicone rubber

*2 Indicates the minimum hole size of the adapter or vacuum pad

Dimensions/Models

With buffer/barb fitting ø10 to ø40

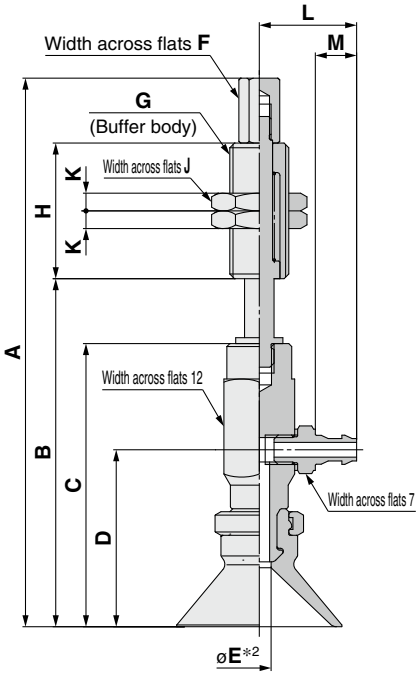

Construction	p. 118
Buffer Assembly	p. 126

ZPY ❶10 D ❷N ❸J ❹10 – ❺N4 – ❻A10

❸ Buffer specification

J	Rotating
K	Non-rotating

❻ Connection thread (Male thread)

A10	M10 x 1
A14	M14 x 1

❺ Vacuum inlet (Barb fitting)

N4	For ø4 nylon tubing	M-5AN-4
N6	For ø6 nylon tubing	M-5AN-6
U4	For ø4 soft tubing	M-5AU-4
U6	For ø6 soft tubing	M-5AU-6

Model									A	B	C	D	*2 E	F	G	H	J	K
	Vacuum inlet direction	❶ Pad dia.	Form	❷ *1 Material	❸ Buffer spec.	❹ Buffer stroke	❺ Vacuum inlet	❻ Connection thread										
ZP	Y	10	D	N S U F GN GS	J K	10	N4 N6 U4 U6	A10	86	52	41	25	2.5	6	M10 x 1	23	14	3
						20			124	62						51		
						30			134	72								
						40			170	82						77		
						50			180	92								
		16				10			87	53	42	26				23		
						20			125	63						51		
						30			135	73								
						40			171	83						77		
						50			181	93								
		25				10			93	59	48	30	3.5	6	M10 x 1	23	14	3
						20			131	69						51		
						30			141	79								
						40			177	89						77		
						50			187	99								
		40				10	N6 U6	A14	137	69	57	39	6	10	M14 x 1	50	19	5
						20			134	79								
						30			144	89								
						50			189	109						75		

Dimensions Per Vacuum Inlet

Model									L	M	Fitting part min. hole size
	Vacuum inlet direction	❶ Pad dia.	Form	❷ *1 Material	❸ Buffer spec.	❹ Buffer stroke	❺ Vacuum inlet	❻ Connection thread			
ZP	Y	10 16 25	D	N S U F GN GS	J K	10 20 30 40 50	N4 U4	A10	14.5	5	ø1.8
							N6 U6		16.5	7	ø2.5
		40				10 20 30 50	N6 U6	A14	16.5	7	ø2.5

*1 N: NBR, S: Silicone rubber, U: Urethane rubber, F: FKM, GN: Conductive NBR, GS: Conductive silicone rubber

*2 Indicates the minimum hole size of the adapter or vacuum pad

Basic Pad *ZP Series*
Construction

With adapter | **Flat type: ø2 to ø8** | **Bellows type: ø6 to ø8** | **Thin flat type/Thin flat type with ribs: ø10 to ø16**

Vacuum inlet direction **Vertical** T Type/ZPT

ZPT□-(A5/A6)

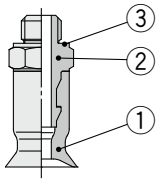

ZPT□-(B4/B5)

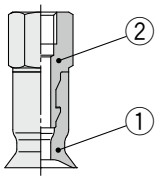

Component Parts

No.	Description	Material	Note
1	**Pad**	NBR, Silicone rubber, Urethane rubber, FKM, Conductive NBR, Conductive silicone rubber	Flat type Bellows type Thin flat type Thin flat type with ribs
2	**Adapter**	Brass (Electroless nickel plating)	
3	**Gasket**	Stainless steel/NBR	

Vacuum inlet direction **Lateral** R Type/ZPR

ZPR□-(04/06)-(A5/A6)

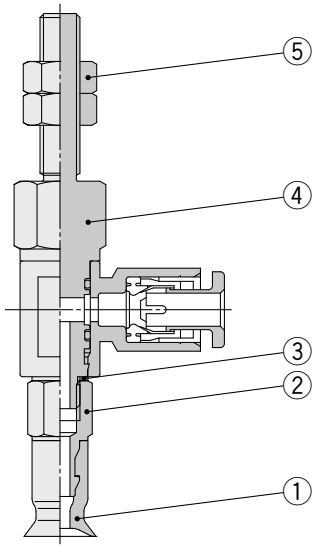

ZPR□-(04/06)-(B4/B5)

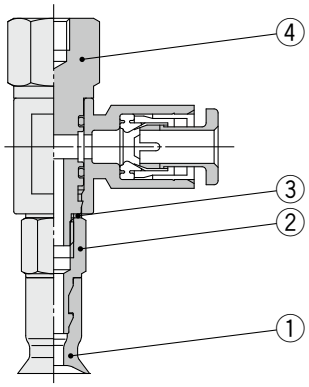

Component Parts

No.	Description	Material	Note
1	**Pad**	NBR, Silicone rubber, Urethane rubber, FKM, Conductive NBR, Conductive silicone rubber	Flat type Bellows type Thin flat type Thin flat type with ribs
2	**Adapter**	Brass (Electroless nickel plating)	
3	**Gasket**	Stainless steel/NBR	
4	**Adapter** **(With One-touch fitting)**	Brass (Electroless nickel plating), PBT, NBR, Stainless steel, POM	
5	**Nut**	Rolled steel (Zinc chromated)	M5 x 0.8
		Brass (Nickel plating)	M6 x 1

Vacuum inlet direction **Lateral** Y Type/ZPY

ZPY□-(N4/N6/U4/U6)-(A5/A6)

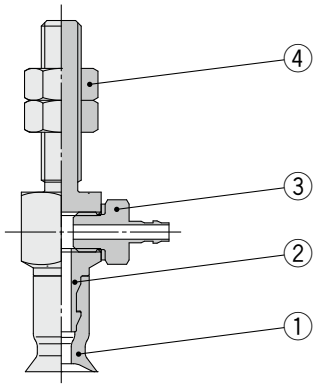

ZPY□-(N4/N6/U4/U6)-(B4/B5)

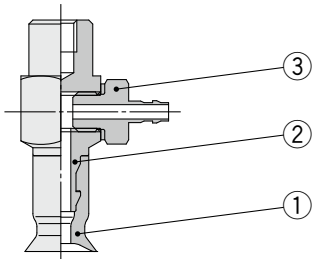

Component Parts

No.	Description	Material	Note
1	**Pad**	NBR, Silicone rubber, Urethane rubber, FKM, Conductive NBR, Conductive silicone rubber	Flat type Bellows type Thin flat type Thin flat type with ribs
2	**Adapter**	Brass (Electroless nickel plating)	
3	**Barb fitting**	—	
4	**Nut**	Rolled steel (Zinc chromated)	M5 x 0.8
		Brass (Nickel plating)	M6 x 1

With buffer | **Flat type: ø2 to ø8** | **Bellows type: ø6 to ø8** | **Thin flat type/Thin flat type with ribs: ø10 to ø16**

Vacuum inlet direction Vertical T Type/ZPT

ZPT□-(B3/B5)-A8 **ZPT□-(04/06)-A8** **ZPT□-(N4/U4)-A8**

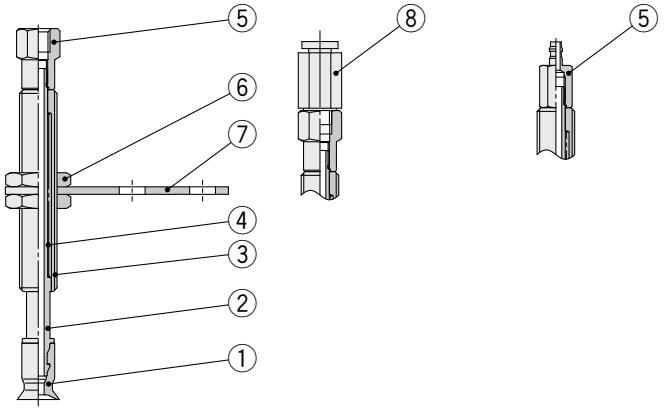

Component Parts

No.	Description	Material	Note
1	**Pad**	NBR, Silicone rubber, Urethane rubber, FKM, Conductive NBR, Conductive silicone rubber	Flat type Bellows type Thin flat type Thin flat type with ribs
2	**Piston rod**	Stainless steel	
3	**Buffer body**	Brass (Electroless nickel plating)	
4	**Return spring**	Stainless steel	
5	**Buffer adapter**	Brass (Electroless nickel plating)	
6	**Nut**	Brass (Electroless nickel plating)	M8 x 1
7	**Buffer plate**	Steel (Trivalent chromated)	
8	**Fitting**	—	

Vacuum inlet direction Lateral R Type/ZPR

ZPR□-(04/06)-A8

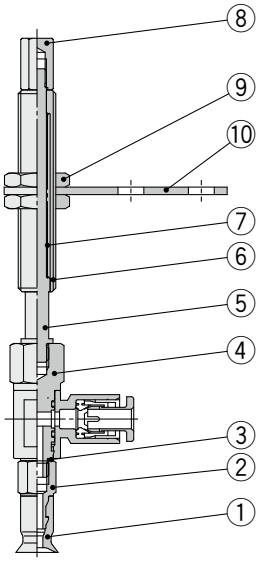

Component Parts

No.	Description	Material	Note
1	**Pad**	NBR, Silicone rubber, Urethane rubber, FKM, Conductive NBR, Conductive silicone rubber	Flat type Bellows type Thin flat type Thin flat type with ribs
2	**Adapter**	Brass (Electroless nickel plating)	
3	**Gasket**	Stainless steel 304/NBR	
4	**Adapter** (With One-touch fitting)	Brass (Electroless nickel plating), PBT, NBR, Stainless steel, POM	
5	**Piston rod**	Stainless steel	
6	**Buffer body**	Brass (Electroless nickel plating)	
7	**Return spring**	Stainless steel	
8	**Buffer adapter**	Brass (Electroless nickel plating)	
9	**Nut**	Brass (Electroless nickel plating)	M8 x 1
10	**Buffer plate**	Steel (Trivalent chromated)	

Vacuum inlet direction Lateral Y Type/ZPY

ZPY□-(N4/N6/U4/U6)-A8

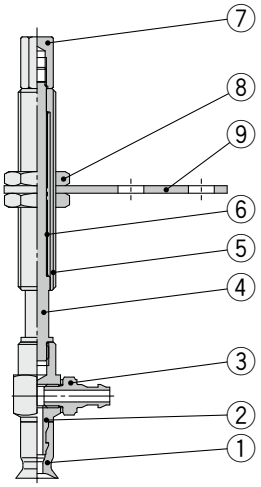

Component Parts

No.	Description	Material	Note
1	**Pad**	NBR, Silicone rubber, Urethane rubber, FKM, Conductive NBR, Conductive silicone rubber	Flat type Bellows type Thin flat type Thin flat type with ribs
2	**Adapter**	Brass (Electroless nickel plating)	
3	**Barb fitting**	—	
4	**Piston rod**	Stainless steel	
5	**Buffer body**	Brass (Electroless nickel plating)	
6	**Return spring**	Stainless steel	
7	**Buffer adapter**	Brass (Electroless nickel plating)	
8	**Nut**	Brass (Electroless nickel plating)	M8 x 1
9	**Buffer plate**	Steel (Trivalent chromated)	

With adapter | **Flat type: ø10 to ø50** | **Flat type with ribs: ø10 to ø50** | **Bellows type: ø10 to ø50** | **Deep type: ø10 to ø40**

Vacuum inlet direction Vertical T Type/ZPT

ZPT□-(A5/A6/A8)

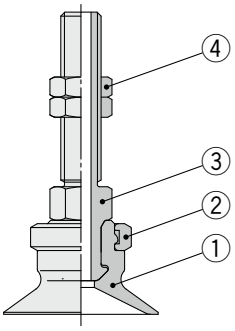

ZPT□-(B5/B6/B8/B01/N01/T01)

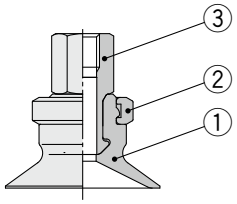

Component Parts

No.	Description	Material	Note
1	**Pad**	NBR, Silicone rubber, Urethane rubber, FKM, Conductive NBR, Conductive silicone rubber	Flat type Flat type with ribs Bellows type Deep type
2	**Lock ring**	Brass (Electroless nickel plating)	
3	**Adapter**	Brass (Electroless nickel plating)	
4	**Nut**	Rolled steel (Zinc chromated)	M5 x 0.8
		Brass (Electroless nickel plating)	M6 x 1
			M8 x 1

Vacuum inlet direction Lateral R Type/ZPR

ZPR□-(04/06/08)-(A5/A6/A8)

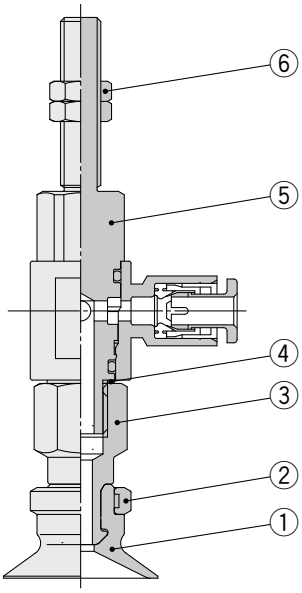

ZPR□-(04/06/08)-(B5/B6/B8)

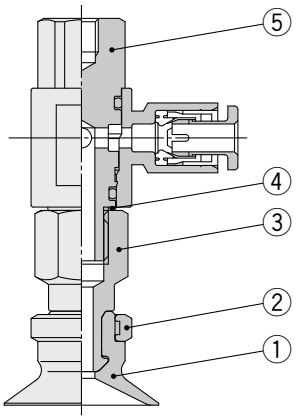

Component Parts

No.	Description	Material	Note
1	**Pad**	NBR, Silicone rubber, Urethane rubber, FKM, Conductive NBR, Conductive silicone rubber	Flat type Flat type with ribs Bellows type Deep type
2	**Lock ring**	Brass (Electroless nickel plating)	
3	**Adapter**	Brass (Electroless nickel plating)	
4	**Gasket**	Stainless steel 304/NBR	
5	**Adapter** **(With One-touch fitting)**	Brass (Electroless nickel plating), PBT, NBR, Stainless steel, POM	
6	**Nut**	Rolled steel (Zinc chromated)	M5 x 0.8
		Brass (Electroless nickel plating)	M6 x 1
			M8 x 1

Vacuum inlet direction Lateral Y Type/ZPY

ZPY□-(N4/N6/U4/U6)-(A5/A6/A8)

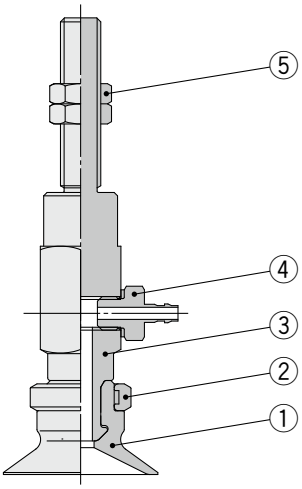

ZPY□-(N4/N6/U4/U6)-(B5/B6/B8)

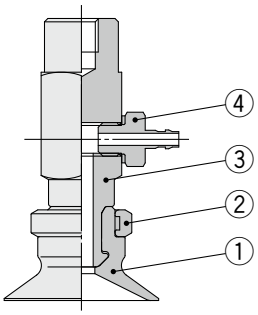

Component Parts

No.	Description	Material	Note
1	**Pad**	NBR, Silicone rubber, Urethane rubber, FKM, Conductive NBR, Conductive silicone rubber	Flat type Flat type with ribs Bellows type Deep type
2	**Lock ring**	Brass (Electroless nickel plating)	
3	**Adapter**	Brass (Electroless nickel plating)	
4	**Barb fitting**	—	
5	**Nut**	Rolled steel (Zinc chromated)	M5 x 0.8
		Brass (Electroless nickel plating)	M6 x 1
			M8 x 1

With buffer | **Flat type: ø10 to ø50** | **Flat type with ribs: ø10 to ø50** | **Bellows type: ø10 to ø50** | **Deep type: ø10 to ø40**

Vacuum inlet direction **Vertical** T Type/ZPT

ZPT□-(B5/B01/N01/T01)-(A10/A14)

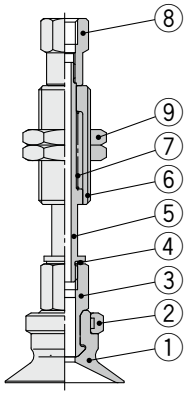

ZPT□-(04/06/08)-(A10/A14)

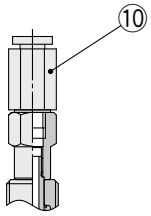

ZPT□-(N6/U6)-(A10/A14)

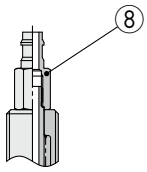

Component Parts

No.	Description	Material	Note
1	**Pad**	NBR, Silicone rubber, Urethane rubber, FKM, Conductive NBR, Conductive silicone rubber	Flat type Flat type with ribs Bellows type Deep type
2	**Lock ring**	Brass (Electroless nickel plating)	
3	**Adapter**	Brass (Electroless nickel plating)	
4	**Gasket**	Stainless steel/NBR	
5	**Piston rod**	Stainless steel	
6	**Buffer body**	Brass (Electroless nickel plating)	
7	**Return spring**	Stainless steel	
8	**Buffer adapter**	Brass (Electroless nickel plating)	
9	**Nut**	Brass (Electroless nickel plating)	M10 x 1 M14 x 1
10	**Fitting**	—	

Vacuum inlet direction **Lateral** R Type/ZPR

ZPR□-(04/06/08)-(A10/A14)

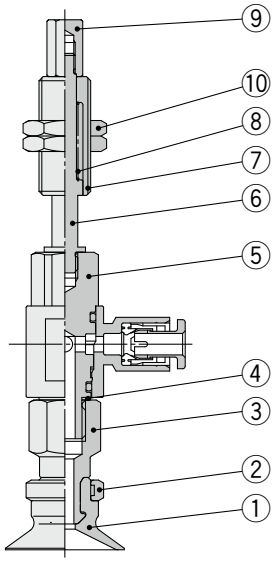

Component Parts

No.	Description	Material	Note
1	**Pad**	NBR, Silicone rubber, Urethane rubber, FKM, Conductive NBR, Conductive silicone rubber	Flat type Flat type with ribs Bellows type Deep type
2	**Lock ring**	Brass (Electroless nickel plating)	
3	**Adapter**	Brass (Electroless nickel plating)	
4	**Gasket**	Stainless steel/NBR	
5	**Adapter** **(With One-touch fitting)**	Brass (Electroless nickel plating), PBT, NBR, Stainless steel, POM	
6	**Piston rod**	Stainless steel	
7	**Buffer body**	Brass (Electroless nickel plating)	
8	**Return spring**	Stainless steel	
9	**Buffer adapter**	Brass (Electroless nickel plating)	
10	**Nut**	Brass (Electroless nickel plating)	M10 x 1 M14 x 1

Vacuum inlet direction **Lateral** Y Type/ZPY

ZPY□-(N4/N6/U4/U6)-(A10/A14)

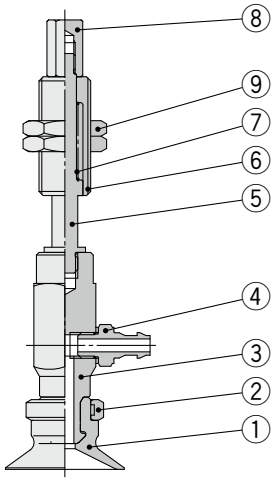

Component Parts

No.	Description	Material	Note
1	**Pad**	NBR, Silicone rubber, Urethane rubber, FKM, Conductive NBR, Conductive silicone rubber	Flat type Flat type with ribs Bellows type Deep type
2	**Lock ring**	Brass (Electroless nickel plating)	
3	**Adapter**	Brass (Electroless nickel plating)	
4	**Barb fitting**	—	
5	**Piston rod**	Stainless steel	
6	**Buffer body**	Brass (Electroless nickel plating)	
7	**Return spring**	Stainless steel	
8	**Buffer adapter**	Brass (Electroless nickel plating)	
9	**Nut**	Brass (Electroless nickel plating)	M10 x 1 M14 x 1

Construction

With adapter **Flat type: ø10 to ø50**

Vacuum inlet direction **Vertical** T Type/ZPT□F

ZPT□F□-B5-(A8/A10/A14)

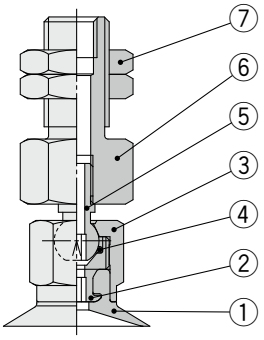

ZPT□F□-(B5/B8/B01/N01/T01)

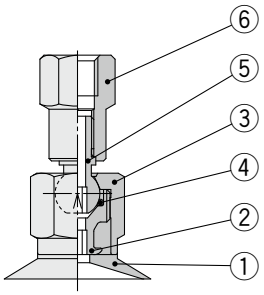

ø10 to ø32

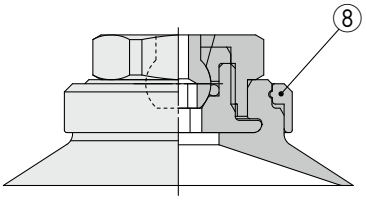

ø40, ø50

Component Parts

No.	Description	Material	Note
1	**Pad**	NBR, Silicone rubber, Urethane rubber, FKM, Conductive NBR, Conductive silicone rubber	Flat type
2	**Adapter**	Brass (Electroless nickel plating)	
3	**Shaft cover**	Stainless steel	
4	**O-ring**	FKM	
5	**Shaft**	Stainless steel	
6	**Shaft adapter**	Brass (Electroless nickel plating)	
7	**Nut**	Brass (Electroless nickel plating)	M8 x 1 M10 x 1 M14 x 1
8	**Lock ring**	Aluminum (Black anodized)	Pad diameter: ø40, ø50

Vacuum inlet direction Lateral R Type/ZPR□F

ZPR□F□-(04/06/08)-(B5/B8)

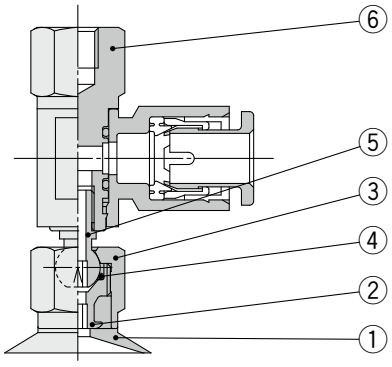

ø10 to ø32

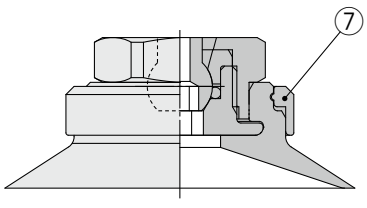

ø40, ø50

Component Parts

No.	Description	Material	Note
1	**Pad**	NBR, Silicone rubber, Urethane rubber, FKM, Conductive NBR, Conductive silicone rubber	Flat type
2	**Adapter**	Brass (Electroless nickel plating)	
3	**Shaft cover**	Stainless steel	
4	**O-ring**	FKM	
5	**Shaft**	Stainless steel	
6	**Shaft adapter** (With One-touch fitting)	Brass (Electroless nickel plating), PBT, NBR, Stainless steel, POM	
7	**Lock ring**	Aluminum (Black anodized)	Pad diameter: ø40, ø50

With buffer **Flat type: ø10 to ø50**

Vacuum inlet direction Vertical T Type/ZPT□F

ZPT□F□-(B5/B01/N01/T01)-(A10/A14) **ZPT□F□-(04/06/08)-(A10/A14)**

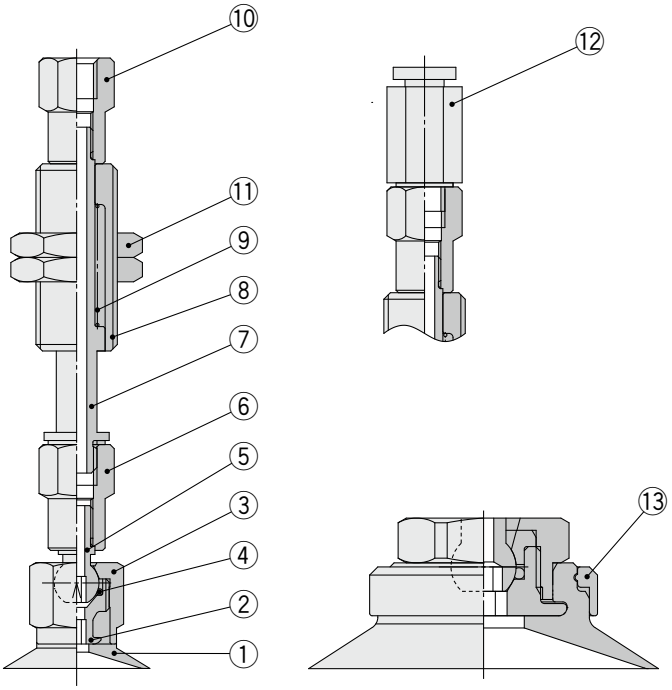

ø10 to ø32 ø40, ø50

Component Parts

No.	Description	Material	Note
1	**Pad**	NBR, Silicone rubber, Urethane rubber, FKM, Conductive NBR, Conductive silicone rubber	Flat type
2	**Adapter**	Brass (Electroless nickel plating)	
3	**Shaft cover**	Stainless steel	
4	**O-ring**	FKM	
5	**Shaft**	Stainless steel	
6	**Shaft adapter**	Brass (Electroless nickel plating)	
7	**Piston rod**	Stainless steel	
8	**Buffer body**	Brass (Electroless nickel plating)	
9	**Return spring**	Stainless steel	
10	**Buffer adapter**	Brass (Electroless nickel plating)	
11	**Nut**	Brass (Electroless nickel plating)	M10 x 1 M14 x 1
12	**Fitting**	—	
13	**Lock ring**	Aluminum (Black anodized)	Pad diameter: ø40, ø50

Vacuum inlet direction Lateral R Type/ZPR□F

ZPR□F□-(04/06/08)-(A10/A14)

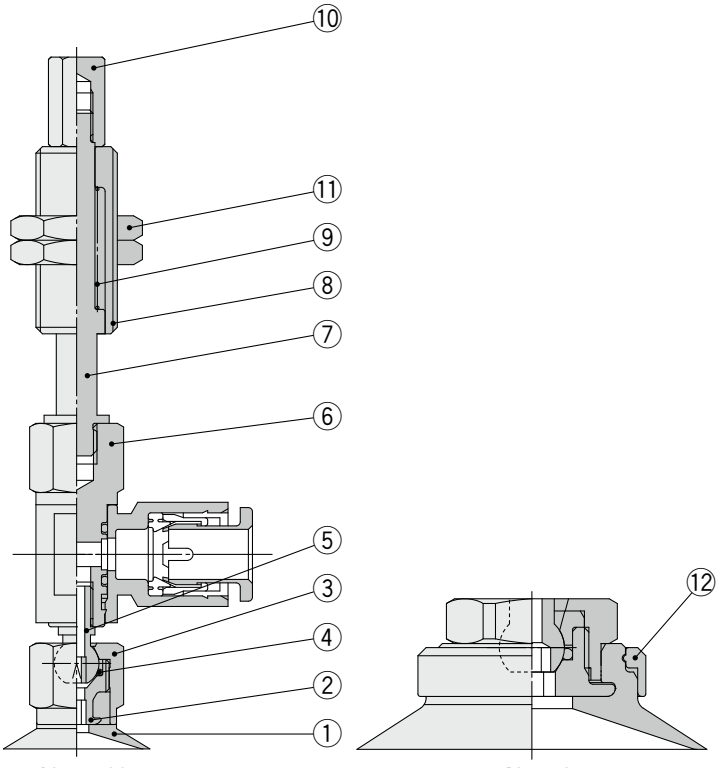

ø10 to ø32 ø40, ø50

Component Parts

No.	Description	Material	Note
1	**Pad**	NBR, Silicone rubber, Urethane rubber, FKM, Conductive NBR, Conductive silicone rubber	Flat type
2	**Adapter**	Brass (Electroless nickel plating)	
3	**Shaft cover**	Stainless steel	
4	**O-ring**	FKM	
5	**Shaft**	Stainless steel	
6	**Shaft adapter** (With One-touch fitting)	Brass (Electroless nickel plating), PBT, NBR, Stainless steel, POM	
7	**Piston rod**	Stainless steel	
8	**Buffer body**	Brass (Electroless nickel plating)	
9	**Return spring**	Stainless steel	
10	**Buffer adapter**	Brass (Electroless nickel plating)	
11	**Nut**	Brass (Electroless nickel plating)	
12	**Lock ring**	Aluminum (Black anodized)	Pad diameter: ø40, ø50

Basic Pad *ZP Series*
Mounting Bracket Assembly

Adapter Assembly: Vacuum Inlet Direction **Vertical** T Type/ZPT

Product part no.

ZPT ① ② □ - ③

- ① Pad diameter
- ② Pad form
- □ Pad material
- ③ Vacuum inlet (Male/Female thread)

Component parts

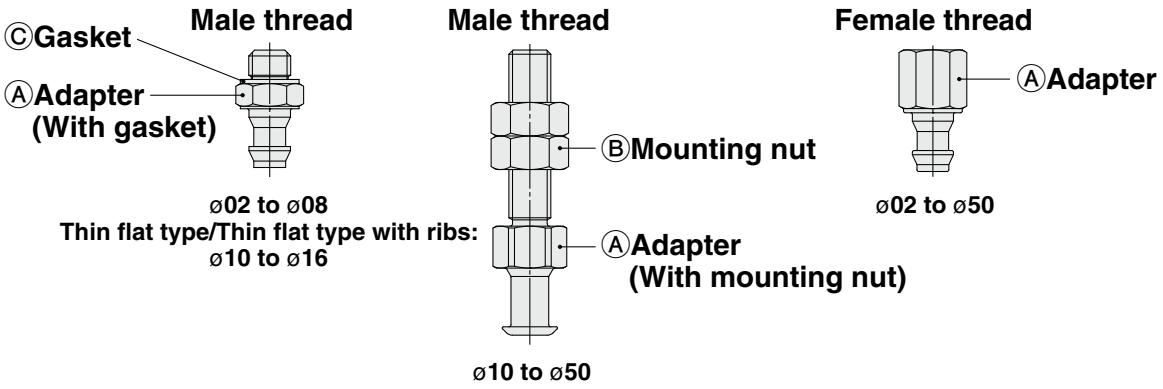

		Symbol	① Pad diameter symbol														
			02	04	06	08	10	13	16	10	13	16	20	25	32	40	50
② Pad form	Flat type	U	●	●	●	●	—	—	—	●	●	●	●	●	●	●	●
	Flat type with ribs	C	—	—	—	—	—	—	—	●	●	●	●	●	●	●	●
	Bellows type	B	—	—	●	●	—	—	—	●	●	●	●	●	●	●	●
	Thin flat type	UT	—	—	—	—	●	●	●	—	—	—	—	—	—	—	—
	Thin flat type with ribs	CT	—	—	—	—	●	●	●	—	—	—	—	—	—	—	—
	Deep type	D	—	—	—	—	—	—	—	●	—	●	—	●	—	●	—
Ⓐ Adapter ③ Vacuum inlet: Male thread	M5 x 0.8	A5	ZPT1-A5							ZPT2-A5			—			—	
	M6 x 1	A6	ZPT1-A6							ZPT2-A6			ZPT3-A6			ZPT4-A6	
	M8 x 1	A8	—							—			ZPT3-A8			ZPT4-A8	
Ⓐ Adapter ③ Vacuum inlet: Female thread	M4 x 0.7	B4	ZPT1-B4							—			—			—	
	M5 x 0.8	B5	ZPT1-B5							ZPT2-B5			ZPT3-B5			—	
	M6 x 1	B6	—							ZPT2-B6			ZPT3-B6			ZPT4-B6	
	M8 x 1.25	B8	—							—			ZPT3-B8			ZPT4-B8	
	Rc1/8	B01	—							ZPT2-B01			ZPT3-B01			ZPT4-B01	
	NPT1/8	N01	—							ZPT2-N01			ZPT3-N01			ZPT4-N01	
	NPTF1/8	T01	—							ZPT2-T01			ZPT3-T01			ZPT4-T01	
Ⓑ Mounting nut (Single unit)	M5 x 0.8		—							NTJ-015A			—			—	
	M6 x 1		—							ZPNA-M6			ZPNA-M6			ZPNA-M6	
	M8 x 1		—							—			ZPNA-M8			ZPNA-M8	
Ⓒ Gasket (Single unit)	For M5 x 0.8		M-5G2							—			—			—	
	For M6 x 1		M-6G							—			—			—	

Adapter Assembly: With One-touch Fitting, Vacuum Inlet Direction Lateral R Type/ZPR

Product part no.

ZPR ① ② □ - ③ - ④

- ① Pad diameter
- ② Pad form
- □ Pad material
- ③ Vacuum inlet (One-touch fitting)
- ④ Connection thread (Male/Female thread)

Component parts

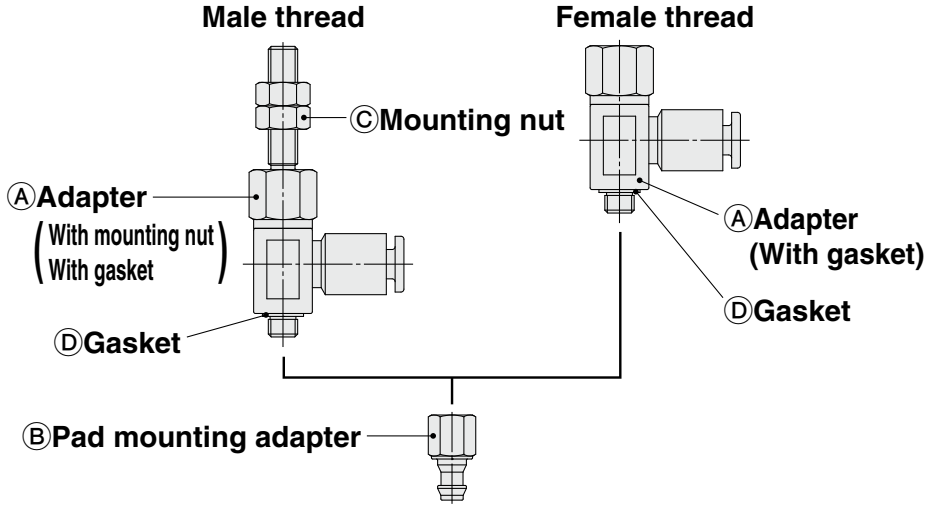

			Symbol	①Pad diameter symbol														
				02	04	06	08	10	13	16	10	13	16	20	25	32	40	50
②Pad form	Flat type		U	●	●	●	●	—	—	—	●	●	●	●	●	●	●	●
	Flat type with ribs		C	—	—	—	—	—	—	—	●	●	●	●	●	●	●	●
	Bellows type		B	—	—	●	●	—	—	—	●	●	●	●	●	●	●	●
	Thin flat type		UT	—	—	—	—	●	●	●	—	—	—	—	—	—	—	—
	Thin flat type with ribs		CT	—	—	—	—	●	●	●	—	—	—	—	—	—	—	—
	Deep type		D	—	—	—	—	—	—	—	●	—	●	—	●	—	●	—
Ⓐ Adapter / ③Vacuum inlet (One-touch fitting)	ø4	04 / ④Connection thread: Male thread	M5 x 0.8	A5	ZPRS-04-A5						ZPRS-04-A5			—			—	
			M6 x 1	A6	ZPRS-04-A6						ZPRS-04-A6			ZPRL-04-A6			—	
			M8 x 1	A8	—						—			ZPRL-04-A8			—	
		Female thread	M4 x 0.7	B4	ZPRS-04-B4						—			—			—	
			M5 x 0.8	B5	ZPRS-04-B5						ZPRS-04-B5			ZPRL-04-B5			—	
			M6 x 1	B6	—						ZPRS-04-B6			ZPRL-04-B6			—	
			M8 x 1.25	B8	—						—			ZPRL-04-B8			—	
	ø6	06	M5 x 0.8	A5	ZPRS-06-A5						ZPRS-06-A5			—			—	
			M6 x 1	A6	ZPRS-06-A6						ZPRS-06-A6			ZPRL-06-A6			ZPRL-06-A6	
			M8 x 1	A8	—						—			ZPRL-06-A8			ZPRL-06-A8	
			M4 x 0.7	B4	ZPRS-06-B4						—			—			—	
			M5 x 0.8	B5	ZPRS-06-B5						ZPRS-06-B5			ZPRL-06-B5			—	
			M6 x 1	B6	—						ZPRS-06-B6			ZPRL-06-B6			ZPRL-06-B6	
			M8 x 1.25	B8	—						—			ZPRL-06-B8			ZPRL-06-B8	
	ø8	08	M6 x 1	A6	—						—			ZPRL-08-A6			ZPRL-08-A6	
			M8 x 1	A8	—						—			ZPRL-08-A8			ZPRL-08-A8	
			M5 x 0.8	B5	—						—			ZPRL-08-B5			—	
			M6 x 1	B6	—						—			ZPRL-08-B6			ZPRL-08-B6	
			M8 x 1.25	B8	—						—			ZPRL-08-B8			ZPRL-08-B8	
Ⓑ Pad mounting adapter				ZPT1-B5							ZPT2-B5			ZPT3-B8			ZPT4-B8	
ⓒ Mounting nut (Single unit)			M5 x 0.8	NTJ-015A							NTJ-015A			—			—	
			M6 x 1	ZPNA-M6							ZPNA-M6			ZPNA-M6			ZPNA-M6	
			M8 x 1	—							—			ZPNA-M8			ZPNA-M8	
Ⓓ Gasket (Single unit)				M-5G2							M-5G2			ZP-8G2			ZP-8G2	

Adapter Assembly: With Barb Fitting, Vacuum Inlet Direction Lateral Y Type/ZPY

Product part no.

ZPY ① ② □ - ③ - ④

- ① Pad diameter
- ② Pad form
- □ Pad material
- ③ Vacuum inlet (Barb fitting)
- ④ Connection thread (Male/Female thread)

Component parts

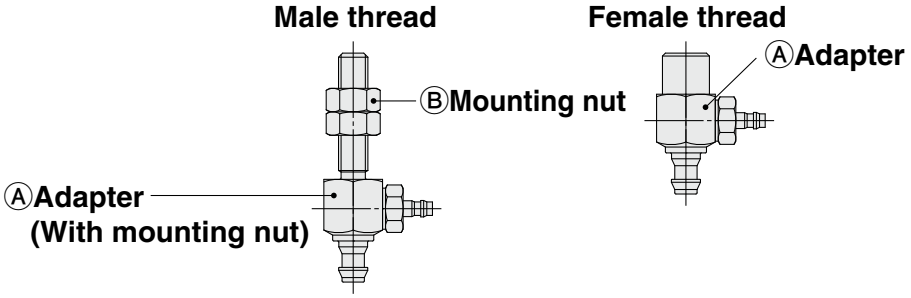

					❶Pad diameter symbol													
				Symbol	02	04	06	08	10	13	16	10	13	16	20	25	32	40	50
❷Pad form	Flat type			U	●	●	●	●	—	—	—	●	●	●	●	●	●	●	●
	Flat type with ribs			C	—	—	—	—	—	—	—	●	●	●	●	●	●	●	●
	Bellows type			B	—	—	●	●	—	—	—	●	●	●	●	●	●	●	●
	Thin flat type			UT	—	—	—	—	●	●	●	—	—	—	—	—	—	—	—
	Thin flat type with ribs			CT	—	—	—	—	●	●	●	—	—	—	—	—	—	—	—
	Deep type			D	—	—	—	—	—	—	—	●	—	●	—	●	—	●	—
ⒶAdapter	❸Vacuum inlet (Barb fitting)	For nylon tubing	ø4 N4	❹Connection thread: Male thread	M5 x 0.8	A5	ZPY1-N4-A5					ZPY2-N4-A5			—			—	
					M6 x 1	A6	ZPY1-N4-A6					ZPY2-N4-A6			ZPY3-N4-A6			—	
					M8 x 1	A8	—					—			ZPY3-N4-A8			—	
				Female thread	M4 x 0.7	B4	ZPY1-N4-B4					—			—			—	
					M5 x 0.8	B5	ZPY1-N4-B5					ZPY2-N4-B5			ZPY3-N4-B5			—	
					M6 x 1	B6	—					ZPY2-N4-B6			ZPY3-N4-B6			—	
					M8 x 1.25	B8	—					—			ZPY3-N4-B8			—	
			ø6 N6	Male thread	M5 x 0.8	A5	ZPY1-N6-A5					ZPY2-N6-A5			—			—	
					M6 x 1	A6	ZPY1-N6-A6					ZPY2-N6-A6			ZPY3-N6-A6			ZPY4-N6-A6	
					M8 x 1	A8	—					—			ZPY3-N6-A8			ZPY4-N6-A8	
				Female thread	M4 x 0.7	B4	ZPY1-N6-B4					—			—			—	
					M5 x 0.8	B5	ZPY1-N6-B5					ZPY2-N6-B5			ZPY3-N6-B5			—	
					M6 x 1	B6	—					ZPY2-N6-B6			ZPY3-N6-B6			ZPY4-N6-B6	
					M8 x 1.25	B8	—					—			ZPY3-N6-B8			ZPY4-N6-B8	
		For soft tubing	ø4 U4	Male thread	M5 x 0.8	A5	ZPY1-U4-A5					ZPY2-U4-A5			—			—	
					M6 x 1	A6	ZPY1-U4-A6					ZPY2-U4-A6			ZPY3-U4-A6			—	
					M8 x 1	A8	—					—			ZPY3-U4-A8			—	
				Female thread	M4 x 0.7	B4	ZPY1-U4-B4					—			—			—	
					M5 x 0.8	B5	ZPY1-U4-B5					ZPY2-U4-B5			ZPY3-U4-B5			—	
					M6 x 1	B6	—					ZPY2-U4-B6			ZPY3-U4-B6			—	
					M8 x 1.25	B8	—					—			ZPY3-U4-B8			—	
			ø6 U6	Male thread	M5 x 0.8	A5	ZPY1-U6-A5					ZPY2-U6-A5			—			—	
					M6 x 1	A6	ZPY1-U6-A6					ZPY2-U6-A6			ZPY3-U6-A6			ZPY4-U6-A6	
					M8 x 1	A8	—					—			ZPY3-U6-A8			ZPY4-U6-A8	
				Female thread	M4 x 0.7	B4	ZPY1-U6-B4					—			—			—	
					M5 x 0.8	B5	ZPY1-U6-B5					ZPY2-U6-B5			ZPY3-U6-B5			—	
					M6 x 1	B6	—					ZPY2-U6-B6			ZPY3-U6-B6			ZPY4-U6-B6	
					M8 x 1.25	B8	—					—			ZPY3-U6-B8			ZPY4-U6-B8	
ⒷMounting nut (Single unit)					M5 x 0.8		NTJ-015A					—			—			—	
					M6 x 1		ZPNA-M6					ZPNA-M6			ZPNA-M6			ZPNA-M6	
					M8 x 1		—					—			ZPNA-M8			ZPNA-M8	

Buffer Assembly: Vacuum Inlet Direction **Vertical** T Type/ZPT

Product part no.

ZPT ① ② □ (J/K) ③ - ④ - ⑤

- ① Pad diameter
- ② Pad form
- □ Pad material
- (J/K) J: Rotating, K: Non-rotating
- ③ Buffer stroke
- ④ Vacuum inlet (Female thread/One-touch fitting/Barb fitting)
- ⑤ Connection thread (Male thread)

Component parts

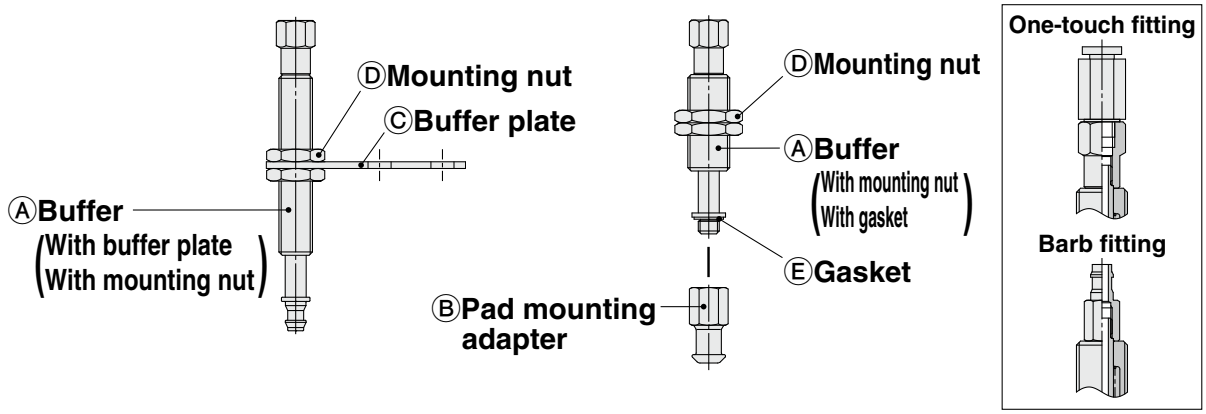

			Symbol	① Pad diameter symbol													
				02	04	06	08	10	13	16	10	13	16	20	25	32	40	50
② Pad form	Flat type		U	●	●	●	●	—	—	—	●	●	●	●	●	●	●	●
	Flat type with ribs		C	—	—	—	—	—	—	—	●	●	●	●	●	●	●	●
	Bellows type		B	—	—	●	●	—	—	—	●	●	●	●	●	●	●	●
	Thin flat type		UT	—	—	—	—	●	●	●	—	—	—	—	—	—	—	—
	Thin flat type with ribs		CT	—	—	—	—	●	●	●	—	—	—	—	—	—	—	—
	Deep type		D	—	—	—	—	—	—	—	●	—	●	—	●	—	●	—
③ Buffer stroke	Stroke		6	●	●	●	●	●	●	●	—	—	—	—	—	—	—	—
			10	●	●	●	●	●	●	●	●	●	●	●	●	●	●	●
			15	●	●	●	●	●	●	●	—	—	—	—	—	—	—	—
			20	—	—	—	—	—	—	—	●	●	●	●	●	●	●	●
			25	●	●	●	●	●	●	●	—	—	—	—	—	—	—	—
			30	—	—	—	—	—	—	—	●	●	●	●	●	●	●	●
			40	—	—	—	—	—	—	—	●	●	●	●	●	●	—	—
			50	—	—	—	—	—	—	—	●	●	●	●	●	●	●	●
⑤ Connection thread	Male thread	M8 x 1	A8	●							—			—			—	
		M10 x 1	A10	—							●			●			—	
		M14 x 1	A14	—							—			—			●	
Ⓐ Buffer ④ Vacuum inlet	Female thread	M3 x 0.5	B3	ZPB1(J/K)③-B3							—			—			—	
		M5 x 0.8	B5	ZPB1(J/K)③-B5							ZPB2(J/K)③-B5			ZPB2(J/K)③-B5			ZPB3(J/K)③-B5	
		Rc1/8	B01	—							—			—			ZPB3(J/K)③-B01	
		NPT1/8	N01	—							—			—			ZPB3(J/K)③-N01	
		NPTF1/8	T01	—							—			—			ZPB3(J/K)③-T01	
	One-touch fitting	ø4	04	ZPB1(J/K)③-04							ZPB2(J/K)③-04			ZPB2(J/K)③-04			—	
		ø6	06	ZPB1(J/K)③-06							ZPB2(J/K)③-06			ZPB2(J/K)③-06			ZPB3(J/K)③-06	
		ø8	08	—							—			—			ZPB3(J/K)③-08	
	Barb fitting	For ø4 nylon tubing	N4	ZPB1(J/K)③-N4							—			—			—	
		For ø6 nylon tubing	N6	—							ZPB2(J/K)③-N6			ZPB2(J/K)③-N6			ZPB3(J/K)③-N6	
		For ø4 soft tubing	U4	ZPB1(J/K)③-U4							—			—			—	
		For ø6 soft tubing	U6	—							ZPB2(J/K)③-U6			ZPB2(J/K)③-U6			ZPB3(J/K)③-U6	
Ⓑ Pad mounting adapter				—							ZPT2-B5			ZPT3-B5			ZPT4-B8	
Ⓒ Buffer plate (Single unit)				ZPB1							—			—			—	
Ⓓ Mounting nut (Single unit)				ZPNA-M8							ZPNA-M10			ZPNA-M10			ZPNA-M14	
Ⓔ Gasket (Single unit)				—							M-5G2			M-5G2			ZP-8G2	

[Buffer assembly part number example]

Product part no. **ZPT08UN J 10 – 04 – A8**

Buffer assembly **ZPB1 J 10 – 04**

③ Buffer stroke

Buffer Assembly: With One-touch Fitting, Vacuum Inlet Direction Lateral R Type/ZPR

Product part no.

ZPR ① ② □ (J/K) ③ - ④ - ⑤

- ① Pad diameter
- ② Pad form
- □ Pad material
- (J/K) J: Rotating, K: Non-rotating
- ③ Buffer stroke
- ④ Vacuum inlet (One-touch fitting)
- ⑤ Connection thread (Male thread)

Component parts

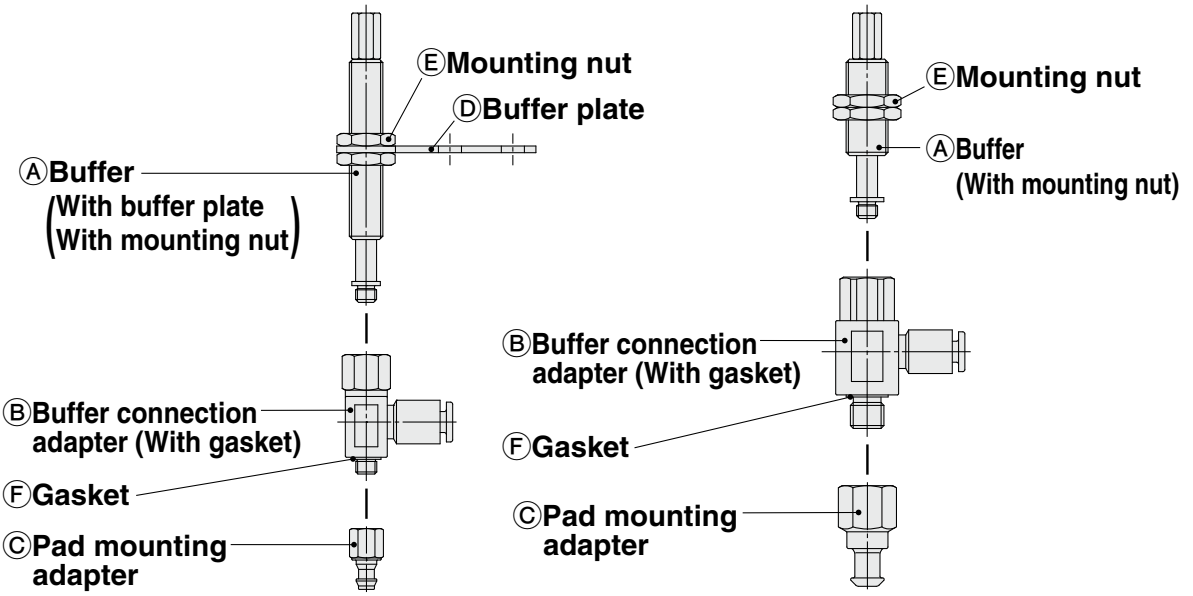

			Symbol	①Pad diameter symbol														
				02	04	06	08	10	13	16	10	13	16	20	25	32	40	50
②Pad form	Flat type		U	●	●	●	●	—	—	—	●	●	●	●	●	●	●	●
	Flat type with ribs		C	—	—	—	—	—	—	—	●	●	●	●	●	●	●	●
	Bellows type		B	—	—	●	●	—	—	—	●	●	●	●	●	●	●	●
	Thin flat type		UT	—	—	—	—	●	●	●	—	—	—	—	—	—	—	—
	Thin flat type with ribs		CT	—	—	—	—	●	●	●	—	—	—	—	—	—	—	—
	Deep type		D	—	—	—	—	—	—	—	●	—	●	—	●	—	●	—
③Buffer stroke	Stroke		6	●	●	●	●	●	●	●	—	—	—	—	—	—	—	—
			10	●	●	●	●	●	●	●	●	●	●	●	●	●	●	●
			15	●	●	●	●	●	●	●	—	—	—	—	—	—	—	—
			20	—	—	—	—	—	—	—	●	●	●	●	●	●	●	●
			25	●	●	●	●	●	●	●	—	—	—	—	—	—	—	—
			30	—	—	—	—	—	—	—	●	●	●	●	●	●	●	●
			40	—	—	—	—	—	—	—	●	●	●	●	●	●	—	—
			50	—	—	—	—	—	—	—	●	●	●	●	●	●	●	●
⑤Connection thread	Male thread	M8 x 1	A8	●							—			—			—	
		M10 x 1	A10	—							●			●			—	
		M14 x 1	A14	—							—			—			●	
ⒶBuffer				ZPB1(J/K)③							ZPB2(J/K)③			ZPB2(J/K)③			ZPB3(J/K)③	
ⒷBuffer connection adapter	④ Vacuum inlet	One-touch fitting	ø4	04	ZPRS-04-B5						ZPRS-04-B5			ZPRL-04-B5			—	
			ø6	06	ZPRS-06-B5						ZPRS-06-B5			ZPRL-06-B5			ZPRL-06-B8	
			ø8	08	—						—			ZPRL-08-B5			ZPRL-08-B8	
ⒸPad mounting adapter				ZPT1-B5							ZPT2-B5			ZPT3-B8			ZPT4-B8	
ⒹBuffer plate (Single unit)				ZPB1							—			—			—	
ⒺMounting nut (Single unit)				ZPNA-M8							ZPNA-M10			ZPNA-M10			ZPNA-M14	
ⒻGasket (Single unit)				M-5G2							M-5G2			ZP-8G2			ZP-8G2	

[Buffer assembly part number example]

Product part no. ZPR10BN K 20 – 04 – A10

Buffer assembly ZPB2 K 20

③Buffer stroke

Buffer Assembly: With Barb Fitting, Vacuum Inlet Direction Lateral Y Type/ZPY

Product part no.

ZPY ① ② □ (J/K) ③ - ④ - ⑤

- ① Pad diameter
- ② Pad form
- □ Pad material
- (J/K) J: Rotating, K: Non-rotating
- ③ Buffer stroke
- ④ Vacuum inlet (Barb fitting)
- ⑤ Connection thread (Male thread)

Component parts

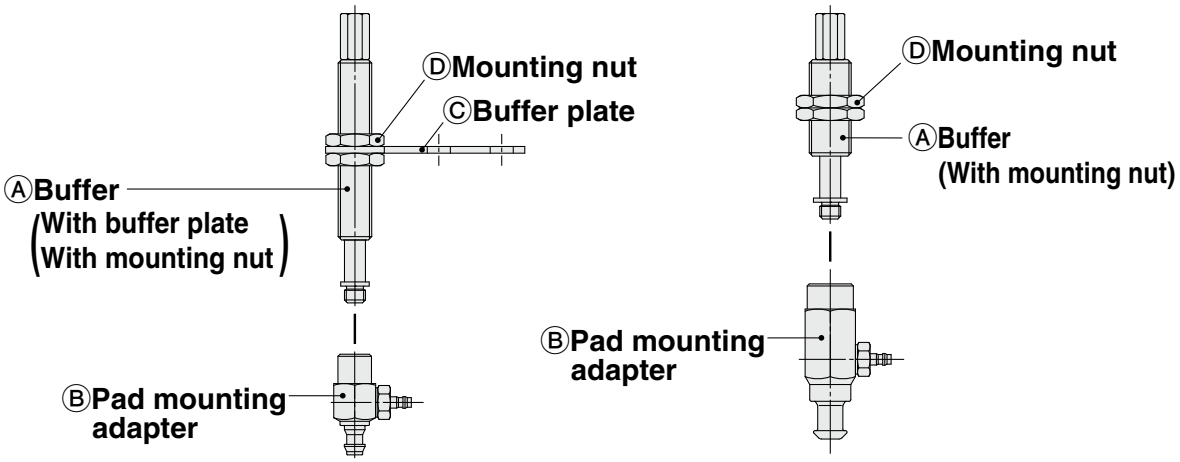

			Symbol	① Pad diameter symbol														
				02	04	06	08	10	13	16	10	13	16	20	25	32	40	50
② Pad form	Flat type		U	●	●	●	●	—	—	—	●	●	●	●	●	●	●	●
	Flat type with ribs		C	—	—	—	—	—	—	—	●	●	●	●	●	●	●	●
	Bellows type		B	—	—	●	●	—	—	—	●	●	●	●	●	●	●	●
	Thin flat type		UT	—	—	—	—	●	●	●	—	—	—	—	—	—	—	—
	Thin flat type with ribs		CT	—	—	—	—	●	●	●	—	—	—	—	—	—	—	—
	Deep type		D	—	—	—	—	—	—	—	●	—	●	—	●	—	●	—
③ Buffer stroke	Stroke		6	●	●	●	●	●	●	●	—	—	—	—	—	—	—	—
			10	●	●	●	●	●	●	●	●	●	●	●	●	●	●	●
			15	●	●	●	●	●	●	●	—	—	—	—	—	—	—	—
			20	—	—	—	—	—	—	—	●	●	●	●	●	●	●	●
			25	●	●	●	●	●	●	●	—	—	—	—	—	—	—	—
			30	—	—	—	—	—	—	—	●	●	●	●	●	●	●	●
			40	—	—	—	—	—	—	—	●	●	●	●	●	●	—	—
			50	—	—	—	—	—	—	—	●	●	●	●	●	●	●	●
⑤ Connection thread	Male thread	M8 x 1	A8	●							—			—			—	
		M10 x 1	A10	—							●			●			—	
		M14 x 1	A14	—							—			—			●	
Ⓐ Buffer				ZPB1(J/K)③							ZPB2(J/K)③			ZPB2(J/K)③			ZPB3(J/K)③	
Ⓑ Pad mounting adapter	④ Vacuum inlet Barb fitting	For ø4 nylon tubing	N4	ZPY1-N4-B5							ZPY2-N4-B5			ZPY3-N4-B5			—	
		For ø6 nylon tubing	N6	ZPY1-N6-B5							ZPY2-N6-B5			ZPY3-N6-B5			ZPY4-N6-B8	
		For ø4 soft tubing	U4	ZPY1-U4-B5							ZPY2-U4-B5			ZPY3-U4-B5			—	
		For ø6 soft tubing	U6	ZPY1-U6-B5							ZPY2-U6-B5			ZPY3-U6-B5			ZPY4-U6-B8	
Ⓒ Buffer plate (Single unit)				ZPB1							—			—			—	
Ⓓ Mounting nut (Single unit)				ZPNA-M8							ZPNA-M10			ZPNA-M10			ZPNA-M14	

[Buffer assembly part number example]

Product part no. ZPY50CN J 50 – N6 – A14

Buffer assembly ZPB3 J 50

③ Buffer stroke

Mounting Bracket Assembly

■Adapter Assembly: Vacuum Inlet Direction Vertical T Type/ZPT□F

Product part no.

ZPT ① F □ - ② - ③

- ① Pad diameter
- □ Pad material
- ② Vacuum inlet (Female thread)
- ③ Connection thread (Male thread)

Component parts

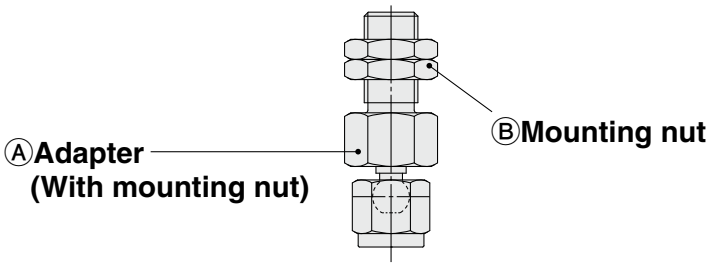

		Symbol			Symbol	① Pad diameter symbol							
						10	13	16	20	25	32	40	50
ⒶAdapter ②Vacuum inlet Female thread	M5 x 0.8	B5	③Connection thread Male thread	M8 x 1	A8	ZPTF1-B5-A8			—			—	
				M10 x 1	A10	—			ZPTF2-B5-A10			—	
				M14 x 1	A14	—			—			ZPTF3-B5-A14	
ⒷMounting nut (Single unit)				M8 x 1		ZPNA-M8			—			—	
				M10 x 1		—			ZPNA-M10			—	
				M14 x 1		—			—			ZPNA-M14	

■Adapter Assembly: Vacuum Inlet Direction Vertical T Type/ZPT□F

Product part no.

ZPT ① F □ - ②

- ① Pad diameter
- □ Pad material
- ② Vacuum inlet (Female thread)

Component parts

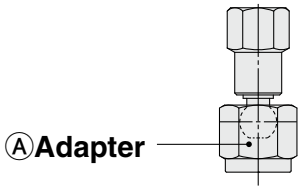

		Symbol	① Pad diameter symbol							
			10	13	16	20	25	32	40	50
ⒶAdapter ②Vacuum inlet Female thread	M5 x 0.8	B5	ZPTF1-B5			ZPTF2-B5			—	
	M8 x 1.25	B8	—			ZPTF2-B8			ZPTF3-B8	
	Rc1/8	B01	—			ZPTF2-B01			ZPTF3-B01	
	NPT1/8	N01	—			ZPTF2-N01			ZPTF3-N01	
	NPTF1/8	T01	—			ZPTF2-T01			ZPTF3-T01	

Adapter Assembly: With One-touch Fitting, Vacuum Inlet Direction Lateral R Type/ZPR□F

Product part no.

ZPR ① F □ - ② - ③

- ① Pad diameter
- □ Pad material
- ② Vacuum inlet (One-touch fitting)
- ③ Connection thread (Female thread)

Component parts

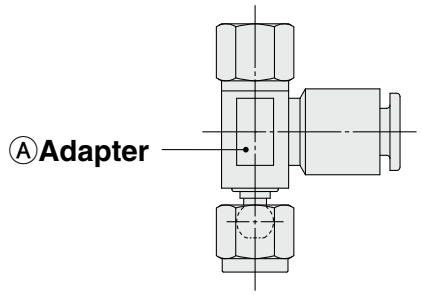

			Symbol			Symbol	❶Pad diameter symbol							
							10	13	16	20	25	32	40	50
ⒶAdapter	❷Vacuum inlet	One-touch fitting	ø4	04	❸Connection thread	Female thread	M5 x 0.8	B5	ZPRF1-04-B5			—		—
			ø6	06			M5 x 0.8	B5	ZPRF1-06-B5			ZPRF2-06-B5		ZPRF3-06-B5
							M8 x 1.25	B8	—			ZPRF2-06-B8		ZPRF3-06-B8
			ø8	08			M5 x 0.8	B5	—			ZPRF2-08-B5		ZPRF3-08-B5
							M8 x 1.25	B8	—			ZPRF2-08-B8		ZPRF3-08-B8

Buffer Assembly: Vacuum Inlet Direction Vertical T Type/ZPT□F

Product part no.

ZPT ① F □ (J/K) ② - ③ - ④

- ① Pad diameter
- □ Pad material
- (J/K) J: Rotating, K: Non-rotating
- ② Buffer stroke
- ③ Vacuum inlet (Female thread/One-touch fitting)
- ④ Connection thread (Male thread)

Component parts

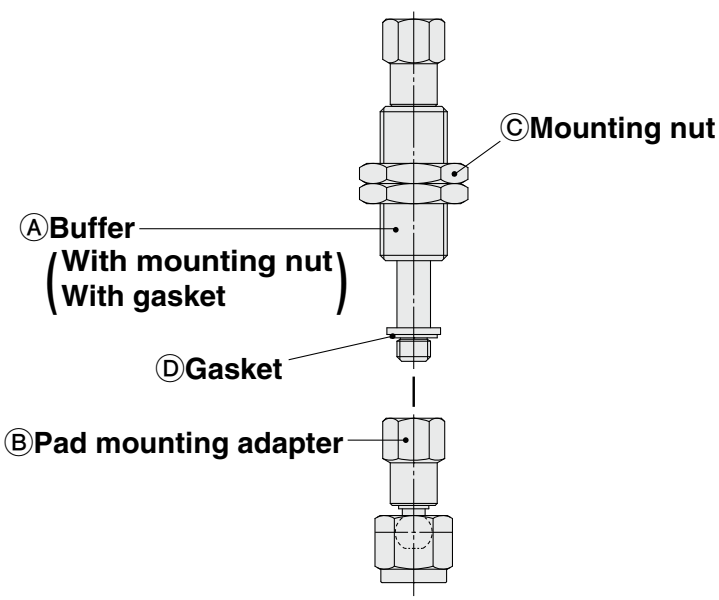

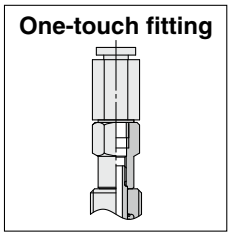

			Symbol	① Pad diameter symbol							
				10	13	16	20	25	32	40	50
②Buffer stroke	Stroke		10	●	●	●	●	●	●	●	●
			20	●	●	●	●	●	●	●	●
			30	●	●	●	●	●	●	●	●
			40	●	●	●	—	—	—	—	—
			50	●	●	●	●	●	●	●	●
④Connection thread	Male thread	M10 x 1	A10	●			—			—	
		M14 x 1	A14	—			●			●	
Ⓐ Buffer	③Vacuum inlet: Female thread	M5 x 0.8	B5	ZPB2(J/K)③-B5			—			—	
		Rc1/8	B01	—			ZPB3(J/K)③-B01			ZPB3(J/K)③-B01	
		NPT1/8	N01	—			ZPB3(J/K)③-N01			ZPB3(J/K)③-N01	
		NPTF1/8	T01	—			ZPB3(J/K)③-T01			ZPB3(J/K)③-T01	
	③Vacuum inlet: One-touch fitting	ø4	04	ZPB2(J/K)③-04			—			—	
		ø6	06	ZPB2(J/K)③-06			ZPB3(J/K)③-06			ZPB3(J/K)③-06	
		ø8	08	—			ZPB3(J/K)③-08			ZPB3(J/K)③-08	
Ⓑ Pad mounting adapter				ZPTF1-B5			ZPTF2-B8			ZPTF3-B8	
Ⓒ Mounting nut (Single unit)		M10 x 1		ZPNA-M10			—			—	
		M14 x 1		—			ZPNA-M14			ZPNA-M14	
Ⓓ Gasket (Single unit)				M-5G2			ZP-8G2			ZP-8G2	

[Buffer assembly part number example]

Product part no. **ZPT20FN J 10 – 06 – A14**

Buffer assembly **ZPB3 J 10**

②Buffer stroke

Buffer Assembly: With One-touch Fitting, Vacuum Inlet Direction Lateral R Type/ZPR□F

Product part no.

ZPR ① F □ (J/K) ② - ③ - ④

- ① Pad diameter
- □ Pad material
- (J/K) J: Rotating, K: Non-rotating
- ② Buffer stroke
- ③ Vacuum inlet (One-touch fitting)
- ④ Connection thread (Male thread)

Component parts

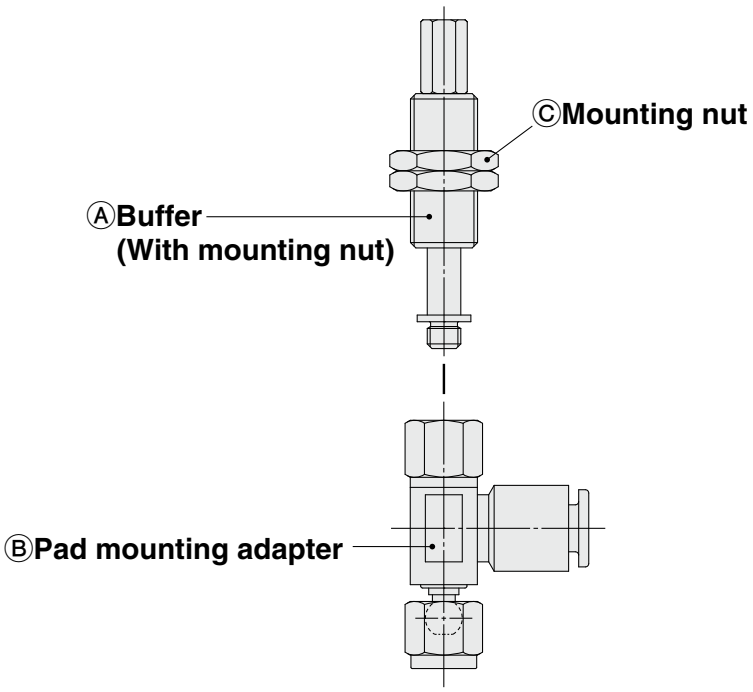

			Symbol	①Pad diameter symbol							
				10	13	16	20	25	32	40	50
②Buffer stroke	Stroke		10	●	●	●	●	●	●	●	●
			20	●	●	●	●	●	●	●	●
			30	●	●	●	●	●	●	●	●
			40	●	●	●	—	—	—	—	—
			50	●	●	●	●	●	●	●	●
④Connection thread	Male thread	M10 x 1	A10	●			—			—	
		M14 x 1	A14	—			●			●	
ⒶBuffer				ZPB2(J/K)②			ZPB3(J/K)②			ZPB3(J/K)②	
ⒷPad mounting adapter	③Vacuum inlet One-touch fitting	ø4	04	ZPRF1-04-B5			—			—	
		ø6	06	ZPRF1-06-B5			ZPRF2-06-B5			ZPRF3-06-B5	
		ø8	08	—			ZPRF2-08-B5			ZPRF3-08-B5	
ⓒMounting nut (Single unit)		M10 x 1		ZPNA-M10			—			—	
		M14 x 1		—			ZPNA-M14			ZPNA-M14	

[Buffer assembly part number example]

Product part no. **ZPR10FN K 30 – 06 – A10**

Buffer assembly **ZPB2 K 30**

②Buffer stroke

Compact Type *ZP3 Series*

RoHS

ø1.5, ø2, ø3.5, ø4, ø6, ø8, ø10, ø13, ø16

Flat Type, Flat Type with Groove, Bellows Type, Bellows Type with Ribs

Overall length shortened

For the flat type (Pad diameter: ø2)

Pad unit **Max. 9 mm shorter**

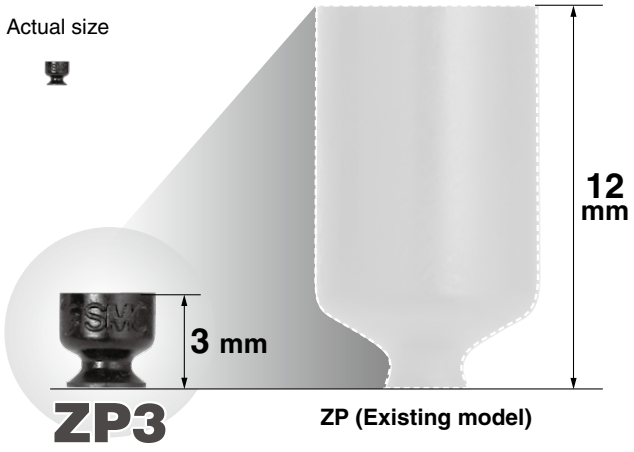

With adapter **Max. 11 mm shorter**

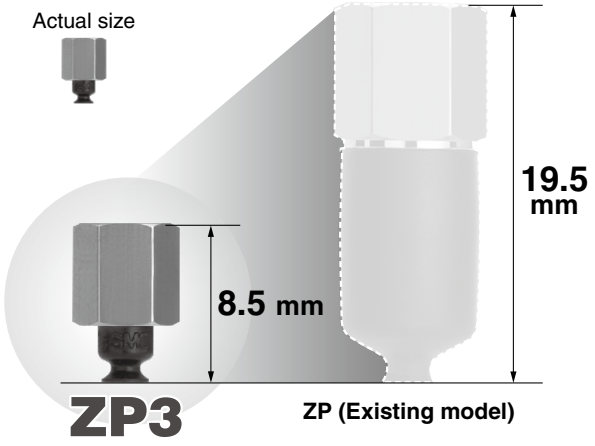

Space saving

ø2 piping reduces working space!

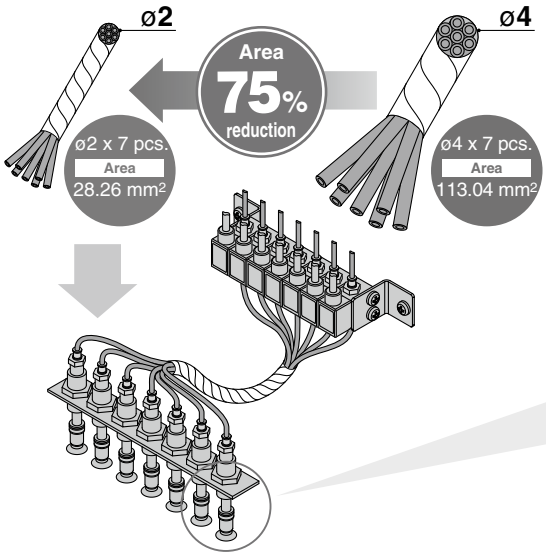

Vertical

- Male thread
- Female thread
- Barb fitting (Applicable tubing: ø2)
- One-touch fitting (Applicable tubing: ø2)

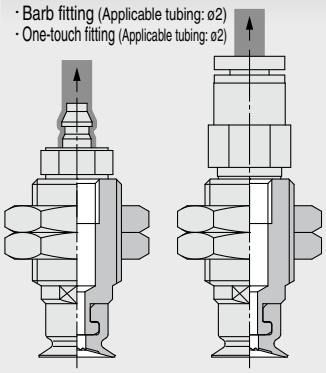

Lateral

- Female thread
- Barb fitting (Applicable tubing: ø2)
- One-touch fitting (Applicable tubing: ø2)

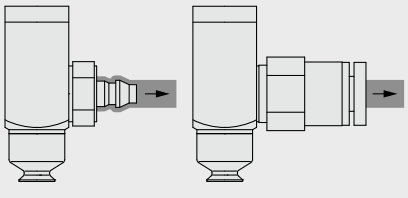

CONTENTS

Compact Type *ZP3 Series*

Features ..... p. 133
Variations ..... p. 134
Specifications ..... p. 135

Flat Type
- How to Order ..... p. 136
- Dimensions/Models ..... p. 137

Flat Type with Groove
- How to Order ..... p. 142
- Dimensions/Models ..... p. 143

Bellows Type
- How to Order ..... p. 148
- Dimensions/Models ..... p. 149

Bellows Type with Ribs
- How to Order ..... p. 154
- Dimensions/Models ..... p. 155

Construction ..... p. 160
Mounting Bracket Assembly ..... p. 162
Specific Product Precautions ..... p. 165



Improved functions

◎Improved removability

Adsorption surface is shot-blasted

Micro-dents and bumps on the surface facilitate easy removal.

With groove

Less contact surface with the workpiece makes it easy to remove.



◎Construction to prevent the pad from coming off

Pad diameter from ø1.5

The new shape of the part which connects with the adapter prevents the pad from coming off.

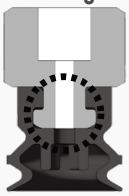

◎Easier identification

SMC logo mark



◎Fixing boss which allows for easy mounting and repeatability

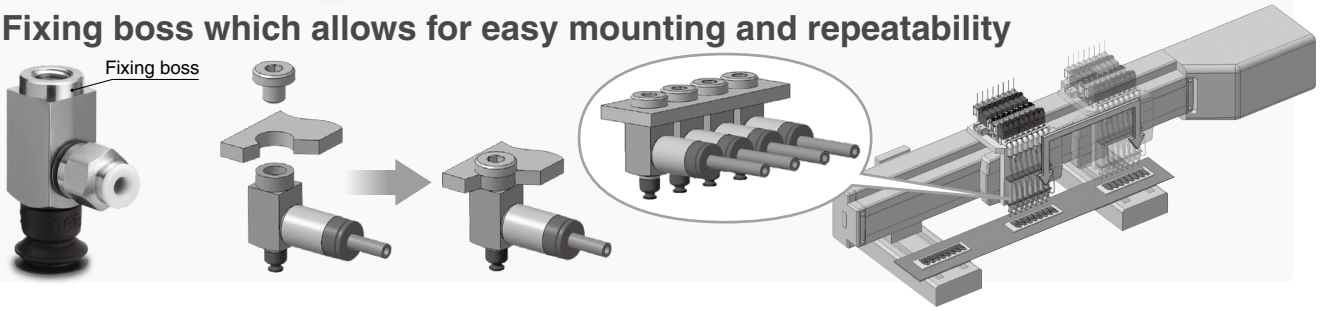

Compact buffer body

◎Overall length shortened

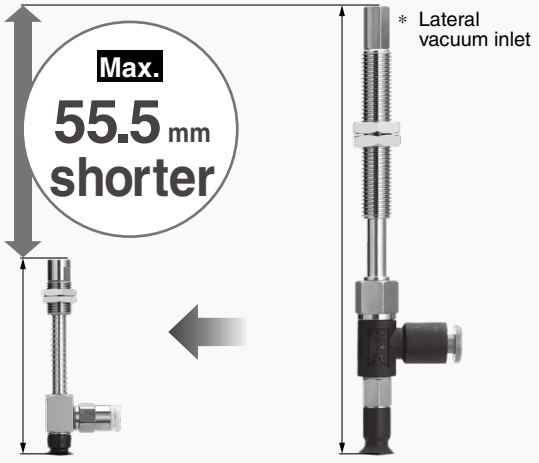

ZP3 **ZP**

Pad diameter ø8, Flat type, With One-touch fitting

ZP3

Stroke	Overall length [mm]
3	40
6	46
10	56
15	59
20	66.5
25	—

ZP

Stroke	Overall length [mm]
3	—
6	78.5
10	109.5
15	114.5
20	—
25	124.5

◎Short stroke type: 3 mm available



3 mm 6 mm 10 mm 15*1 mm 20*1 mm

Buffer stroke (*1 With bushing)

Pad diameter	Buffer specifications	Stroke [mm]				
		3	6	10	15	20
ø1.5, ø2, ø3.5	Rotating, Non-rotating	●	●	—	—	—
ø4, ø6, ø8 ø10, ø13, ø16	Rotating	●	●	●	—	—
	Rotating, With bushing	—	—	—	●	●
	Non-rotating	●	●	●	●	●

Wide selection of piping

Male thread

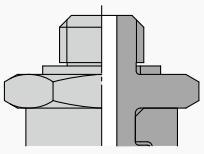

Female thread

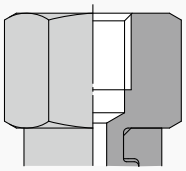

For ø2 piping!

Barb fitting

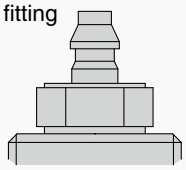

One-touch fitting

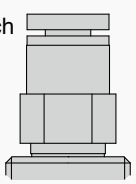

Variations

Vacuum inlet direction		Vacuum inlet direction	Flat type	Flat type with groove	Bellows type	Bellows type with ribs
	Single unit		p. 137	p. 143	p. 149	p. 155
Vertical	ZP3-T With adapter		p. 137	p. 143	p. 149	p. 155
Vertical	ZP3-T With adapter	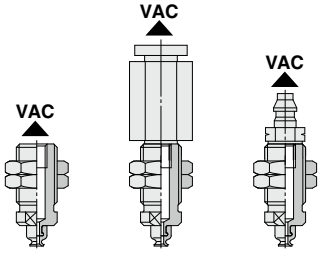	p. 138	p. 144	p. 150	p. 156
Lateral	ZP3-Y With adapter	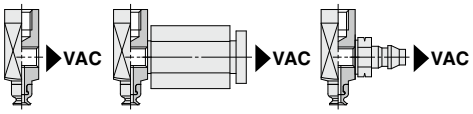	p. 139	p. 145	p. 151	p. 157
Vertical	ZP3-T With buffer	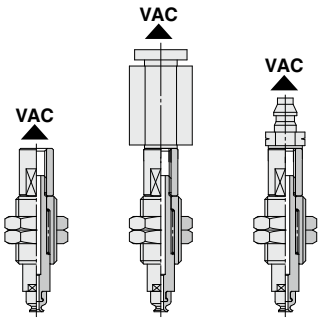	p. 140	p. 146	p. 152	p. 158
Lateral	ZP3-Y With buffer	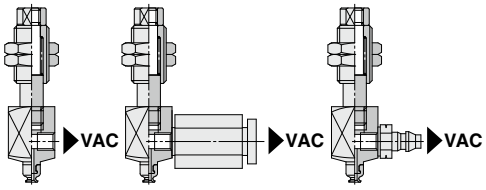	p. 141	p. 147	p. 153	p. 159

Compact Type *ZP3 Series*
Specifications

Pad Material

Material	NBR (Nitrile rubber)	Silicone rubber*1	Urethane rubber	FKM (Fluoro rubber)	Conductive NBR (Nitrile rubber)	Conductive silicone rubber
Color of rubber	Black	White	Brown	Black		
Rubber hardness HS (±5°)	A60/S					
Identification (Dot)	—	—	—	· 1 green dot	· 1 silver dot	· 1 pink dot

*1 Compliant with the FDA (USA Food and Drug Administration) regulation 21CFR§177.2600 for "Rubber articles intended for repeated use"

Adapter Specifications

Vertical

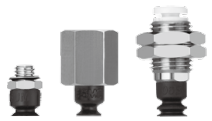

Vacuum Inlet Direction **Vertical** T Type/ZP3-T

Connection		Male thread						Female thread	
Pad diameter		ø1.5 to ø3.5		ø4 to ø8		ø10 to ø16		ø1.5 to ø3.5	ø4 to ø16
Connection thread		M3 x 0.5	M6 x 0.75	M5 x 0.8	M10 x 1	M5 x 0.8	M12 x 1	M3 x 0.5	M5 x 0.8
Vacuum inlet	Female thread	Use the connection thread.	M3 x 0.5	Use the connection thread.	M5 x 0.8	Use the connection thread.	M5 x 0.8	Use the connection thread.	Use the connection thread.
	One-touch fitting		ø2, ø4		ø2, ø4		ø2, ø4, ø6		
	Barb fitting*1		ø2, ø4		ø2, ø4		ø2, ø4, ø6		

*1 ø2 polyurethane tubing, ø4, ø6 soft tubing

Lateral



Vacuum Inlet Direction **Lateral** Y Type/ZP3-Y

Connection		Female thread		
Pad diameter		ø1.5 to ø3.5	ø4 to ø8	ø10 to ø16
Connection thread		M3 x 0.5	M5 x 0.8	M5 x 0.8
Vacuum inlet	Female thread	M3 x 0.5	M5 x 0.8	M5 x 0.8
	One-touch fitting	ø2, ø4	ø2, ø4	ø2, ø4, ø6
	Barb fitting*1	ø2, ø4	ø2, ø4	ø2, ø4, ø6

*1 ø2 polyurethane tubing, ø4, ø6 soft tubing

Buffer Specifications

Vertical
Lateral

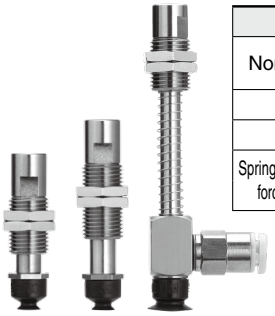

Pad diameter		ø1.5 to ø3.5		ø4 to ø16		
Non-rotating specification		J: Rotating	K: Non-rotating	J: Rotating	JB: Rotating, With bushing	K: Non-rotating
Stroke [mm]		3, 6		3, 6, 10	15, 20	3, 6, 10, 15, 20
Connection thread		M6 x 0.75	M8 x 0.75	M8 x 0.75		
Spring reactive force [N]	At 0 stroke	0.2		0.2		
	At full stroke	0.4	0.5	0.5		

Compact Type
Flat Type
ZP3 Series
Pad diameter: ø1.5, ø2, ø3.5



How to Order

		Dimensions/ Models	Construction	Mounting Bracket Assembly
Pad unit	**ZP3 – 015 U N**	p. **137**	p. **160**	From p. **162**
With adapter	**ZP3 – T 015 U N – A3 –**	From p. **137**	p. **160**	From p. **162**
With buffer	**ZP3 – T 015 U N J 3 – B3**	From p. **140**	p. **161**	p. **164**

∗ Pad unit's sales unit: 10 pcs.

❶ ❷ ❸ ❹ ❺ ❻ ❼

● **Flat type**

❶ Vacuum inlet direction

Nil	Pad unit
T	Vertical
Y	Lateral

❷ Pad diameter

015	ø1.5
02	ø2
035	ø3.5

❸ Material

N	NBR
S	Silicone rubber∗1
U	Urethane rubber
F	FKM
GN	Conductive NBR
GS	Conductive silicone rubber

∗1 Compliant with the FDA (USA Food and Drug Administration) regulation 21CFR§177.2600 for "Rubber articles intended for repeated use"

❹ Buffer specification

J	Rotating
K	Non-rotating

❺ Buffer stroke

Stroke [mm]	Pad diameter
	All sizes
3	●
6	●

With adapter

❻ Connection thread/ ❼ Vacuum inlet

○: ZP3-T/Vertical ●: ZP3-Y/Lateral

❻ Connection thread			❼ Vacuum inlet			Pad diameter
Type	Symbol	Size	Type	Symbol	Size	All sizes
Male thread	**A3**	M3 x 0.5	—	**Nil**	—∗1	○
	A6	M6 x 0.75	Female thread	**B3**	M3 x 0.5	○
			One-touch fitting	**02**	ø2	○
				04	ø4	○
			Barb fitting	**U2**	For ø2 polyurethane tubing∗2	○
				U4	For ø4 soft tubing∗3	○
Female thread	**B3**	M3 x 0.5	—	**Nil**	—∗1	○
			Female thread	**B3**	M3 x 0.5	●
			One-touch fitting	**02**	ø2	●
				04	ø4	●
			Barb fitting	**U2**	For ø2 polyurethane tubing	●
				U4	For ø4 soft tubing	●

∗1 Use the connection thread.
∗2 Polyurethane tube piping
∗3 Soft nylon/Polyurethane tube piping

With buffer

❼ Vacuum inlet

○: ZP3-T/Vertical ●: ZP3-Y/Lateral

Type	Symbol	Size	Pad diameter
			All sizes
Female thread	**B3**	M3 x 0.5	○●
One-touch fitting	**02**	ø2	○●
	04	ø4	○●
Barb fitting	**U2**	For ø2 polyurethane tubing	○●
	U4	For ø4 soft tubing	○●

∗ It is not necessary to select a connection thread.

∗ The pad, mounting nut, and fitting are shipped together but do not come assembled.

Dimensions/Models

Single unit ø1.5 to ø3.5

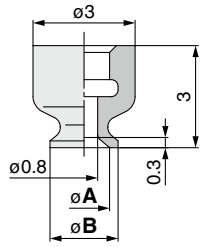

Construction	p. 160
Mounting Bracket Assembly	From p. 162

ZP3 – 015 U N
❶ ❷

Model				A	B
	❶ Pad dia.	Form	❷ Material*1		
ZP3	015	U	N S U F GN GS	1.5	2
	02			2	2.5
	035			3.5	4

*1 N: NBR, S: Silicone rubber, U: Urethane rubber, F: FKM, GN: Conductive NBR, GS: Conductive silicone rubber

With adapter ø1.5 to ø3.5

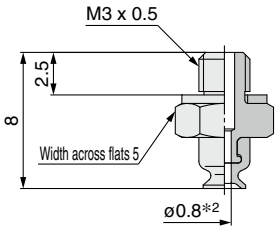

Construction	p. 160
Adapter Assembly	p. 162

ZP3 – T 015 U N – A3
❶ ❷ ❸

❸ Connection thread (Male thread)

A3	M3 x 0.5

Model					
	Vacuum inlet direction	❶ Pad dia.	Form	❷ Material*1	❸ Connection thread
ZP3	T	015 02 035	U	N S U F GN GS	A3

*1 N: NBR, S: Silicone rubber, U: Urethane rubber, F: FKM, GN: Conductive NBR, GS: Conductive silicone rubber
*2 Indicates the minimum hole size of the adapter or vacuum pad

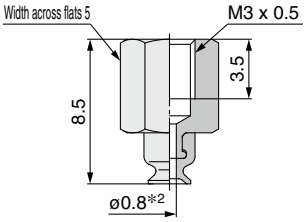

Construction	p. 160
Adapter Assembly	p. 162

ZP3 – T 015 U N – B3
❶ ❷ ❸

❸ Connection thread (Female thread)

B3	M3 x 0.5

Model					
	Vacuum inlet direction	❶ Pad dia.	Form	❷ Material*1	❸ Connection thread
ZP3	T	015 02 035	U	N S U F GN GS	B3

*1 N: NBR, S: Silicone rubber, U: Urethane rubber, F: FKM, GN: Conductive NBR, GS: Conductive silicone rubber
*2 Indicates the minimum hole size of the adapter or vacuum pad

Dimensions/Models

With adapter ø1.5 to ø3.5

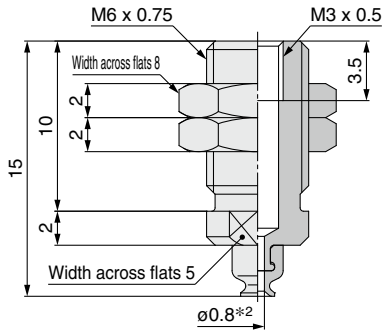

ZP3 – T 015 U N – A6 – B3
❶ ❷ ❸ ❹

❸ Connection thread (Male thread)

A6	M6 x 0.75

❹ Vacuum inlet

B3	M3 x 0.5	Female thread
02	ø2	One-touch fitting
04	ø4	
U2	For ø2 polyurethane tubing	Barb fitting
U4	For ø4 soft tubing	

Model							
	Vacuum inlet direction	❶ Pad dia.	Form	❷ Material *1	❸ Connection thread	❹ Vacuum inlet
ZP3	T	015 02 035	U	N S U F GN GS	A6	B3

Vacuum inlet: One-touch fitting

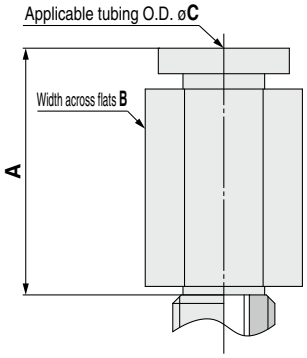

Dimensions Per Vacuum Inlet: One-touch Fitting

Model							A	B	C	Fitting part min. hole size	Fitting part no.
	Vacuum inlet direction	❶ Pad dia.	Form	❷ Material *1	❸ Connection thread	❹ Vacuum inlet					
ZP3	T	015 02 035	U	N S U F GN GS	A6	02	13	5.5	2	ø1.2	KQ2H02-M3G
						04	14.5	8	4		KQ2H04-M3G

Vacuum inlet: Barb fitting

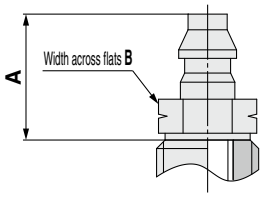

Dimensions Per Vacuum Inlet: Barb Fitting

Model							A	B	Fitting part min. hole size	Fitting part no.
	Vacuum inlet direction	❶ Pad dia.	Form	❷ Material *1	❸ Connection thread	❹ Vacuum inlet				
ZP3	T	015 02 035	U	N S U F GN GS	A6	U2	6.5	4.5	ø0.9	M-3AU-2
						U4	7.4	5	ø1.2	M-3AU-4-X83

*1 N: NBR, S: Silicone rubber, U: Urethane rubber, F: FKM, GN: Conductive NBR, GS: Conductive silicone rubber
*2 Indicates the minimum hole size of the adapter or vacuum pad

Construction	p. 160
Adapter Assembly	p. 163

Dimensions/Models

With adapter ø1.5 to ø3.5

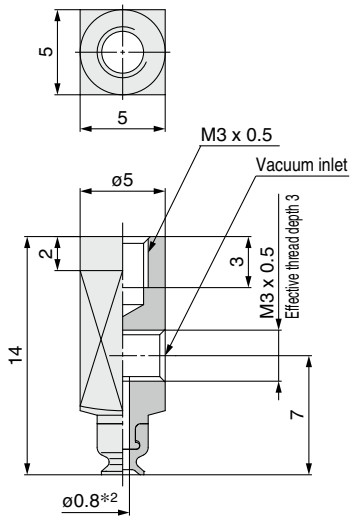

ZP3 – Y 015 U N – B3 – B3

❶ ❷ ❸ ❹

❸ **Connection thread (Female thread)**

B3	M3 x 0.5

❹ **Vacuum inlet**

B3	M3 x 0.5	Female thread
02	ø2	One-touch fitting
04	ø4	
U2	For ø2 polyurethane tubing	Barb fitting
U4	For ø4 soft tubing	

Model							
	Vacuum inlet direction	❶ Pad dia.	Form	❷ Material *1	❸ Connection thread	❹ Vacuum inlet
ZP3	**Y**	**015 02 035**	**U**	**N S U F GN GS**	**B3**	**B3**

Vacuum inlet: One-touch fitting

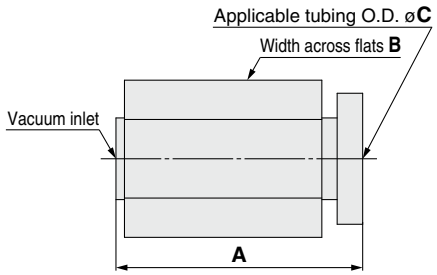

Vacuum inlet: Barb fitting

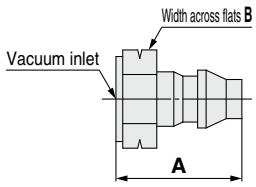

Construction	p. 160
Adapter Assembly	p. 162

Dimensions Per Vacuum Inlet: One-touch Fitting

Model							A	B	C	Fitting part min. hole size	Fitting part no.
	Vacuum inlet direction	❶ Pad dia.	Form	❷ Material *1	❸ Connection thread	❹ Vacuum inlet					
ZP3	**Y**	**015 02 035**	**U**	**N S U F GN GS**	**B3**	**02**	13	5.5	2	ø1.2	KQ2H02-M3G
						04	14.5	8	4		KQ2H04-M3G

Dimensions Per Vacuum Inlet: Barb Fitting

Model							A	B	Fitting part min. hole size	Fitting part no.
	Vacuum inlet direction	❶ Pad dia.	Form	❷ Material *1	❸ Connection thread	❹ Vacuum inlet				
ZP3	**Y**	**015 02 035**	**U**	**N S U F GN GS**	**B3**	**U2**	6.5	4.5	ø0.9	M-3AU-2
						U4	7.4	5	ø1.2	M-3AU-4-X83

*1 N: NBR, S: Silicone rubber, U: Urethane rubber, F: FKM, GN: Conductive NBR, GS: Conductive silicone rubber

*2 Indicates the minimum hole size of the adapter or vacuum pad

Dimensions/Models

With buffer ø1.5 to ø3.5

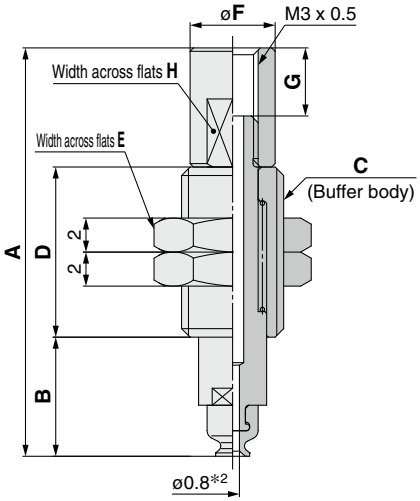

ZP3 – T 015 U N J 3 – B3
❶ ❷ ❸ ❹ ❺

Buffer specification ❸

J	Rotating
K	Non-rotating

❺ Vacuum inlet

B3	M3 x 0.5	Female thread
02	ø2	One-touch fitting
04	ø4	
U2	For ø2 polyurethane tubing	Barb fitting
U4	For ø4 soft tubing	

Model								A	B	C	D	E	F	G	H
	Vacuum inlet direction	❶ Pad dia.	Form	❷ *1 Material	❸ Buffer spec.	❹ Buffer stroke	❺ Vacuum inlet								
ZP3	T	015 02 035	U	N S U F GN GS	J	3	B3	24	7	M6 x 0.75	10	8	5	4	4
						6		31	10		14				
					K	3		26.5	8	M8 x 0.75	11	10	7	3	6
						6		33	11		14.5				

Vacuum inlet: One-touch fitting

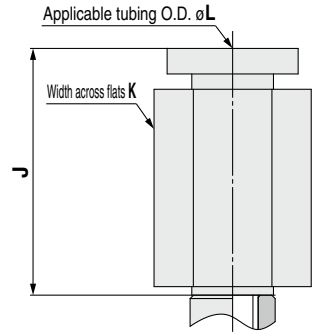

Dimensions Per Vacuum Inlet: One-touch Fitting

Model								J	K	L	Fitting part min. hole size	Fitting part no.
	Vacuum inlet direction	❶ Pad dia.	Form	❷ *1 Material	❸ Buffer spec.	❹ Buffer stroke	❺ Vacuum inlet					
ZP3	T	015 02 035	U	N S U F GN GS	J K	3 6	02	13	5.5	2	ø1.2	KQ2H02-M3G
							04	14.5	8	4		KQ2H04-M3G

Vacuum inlet: Barb fitting

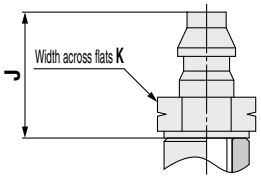

Dimensions Per Vacuum Inlet: Barb Fitting

Model								J	K	Fitting part min. hole size	Fitting part no.
	Vacuum inlet direction	❶ Pad dia.	Form	❷ *1 Material	❸ Buffer spec.	❹ Buffer stroke	❺ Vacuum inlet				
ZP3	T	015 02 035	U	N S U F GN GS	J K	3 6	U2	6.5	4.5	ø0.9	M-3AU-2
							U4	7.4	5	ø1.2	M-3AU-4-X83

*1 N: NBR, S: Silicone rubber, U: Urethane rubber, F: FKM, GN: Conductive NBR, GS: Conductive silicone rubber
*2 Indicates the minimum hole size of the adapter or vacuum pad

Construction	p. 161
Buffer Assembly	p. 164

Dimensions/Models

With buffer ø1.5 to ø3.5

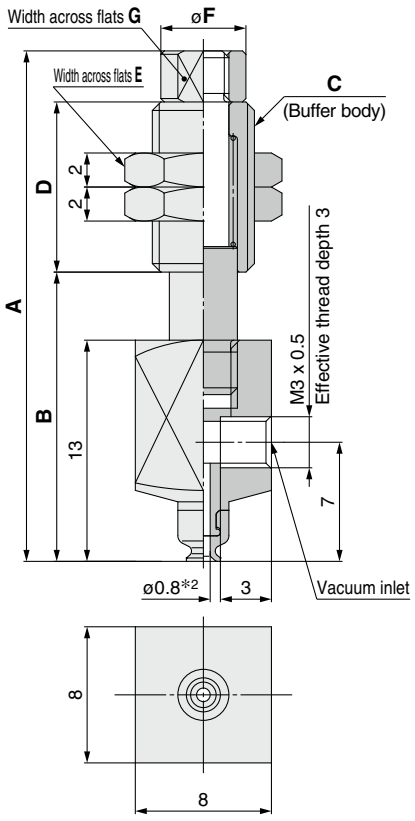

ZP3 – Y 015 U N J 3 – B3
❶ ❷ ❸ ❹ ❺

❸ Buffer specification

J	Rotating
K	Non-rotating

❺ Vacuum inlet

B3	M3 x 0.5	Female thread
02	ø2	One-touch fitting
04	ø4	
U2	For ø2 polyurethane tubing	Barb fitting
U4	For ø4 soft tubing	

Model								A	B	C	D	E	F	G
	❶ Vacuum inlet direction	❶ Pad dia.	Form	❷ *1 Material	❸ Buffer spec.	❹ Buffer stroke	❺ Vacuum inlet							
ZP3	Y	015 02 035	U	N S U F GN GS	J	3	B3	30	17	M6 x 0.75	10	8	5	4
						6		37	20		14			
					K	3		34	17	M8 x 0.75	11	10	7	6
						6		40.5	20		14.5			

Dimensions Per Vacuum Inlet: One-touch Fitting

Model								H	J	K	Fitting part min. hole size	Fitting part no.
	❶ Vacuum inlet direction	❶ Pad dia.	Form	❷ *1 Material	❸ Buffer spec.	❹ Buffer stroke	❺ Vacuum inlet					
ZP3	Y	015 02 035	U	N S U F GN GS	J K	3 6	02	13	5.5	2	ø1.2	KQ2H02-M3G
							04	14.5	8	4		KQ2H04-M3G

Dimensions Per Vacuum Inlet: Barb Fitting

Model								H	J	Fitting part min. hole size	Fitting part no.
	❶ Vacuum inlet direction	❶ Pad dia.	Form	❷ *1 Material	❸ Buffer spec.	❹ Buffer stroke	❺ Vacuum inlet				
ZP3	Y	015 02 035	U	N S U F GN GS	J K	3 6	U2	6.5	4.5	ø0.9	M-3AU-2
							U4	7.4	5	ø1.2	M-3AU-4-X83

*1 N: NBR, S: Silicone rubber, U: Urethane rubber, F: FKM, GN: Conductive NBR, GS: Conductive silicone rubber
*2 Indicates the minimum hole size of the adapter or vacuum pad

Vacuum inlet: One-touch fitting

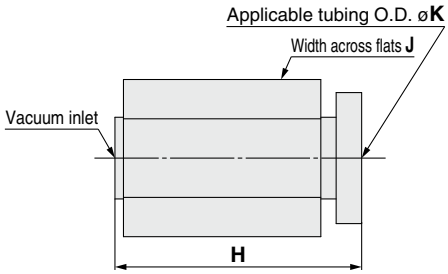

Vacuum inlet: Barb fitting

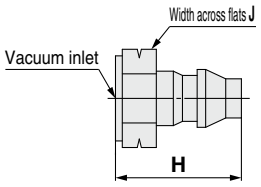

Construction	p. 161
Buffer Assembly	p. 164



Compact Type
Flat Type with Groove
ZP3 Series
Pad diameter: ø4, ø6, ø8, ø10, ø13, ø16



How to Order

		Dimensions/ Models	Construction	Mounting Bracket Assembly
Pad unit	**ZP3 – 04 UM N**	p. **143**	p. **160**	From p. **162**
With adapter	**ZP3 – T 04 UM N – A5 –**	From p. **143**	p. **160**	From p. **162**
With buffer	**ZP3 – T 04 UM N J 3 – B5**	From p. **146**	p. **161**	p. **164**

∗ Pad unit's sales unit: 10 pcs.

❶ ❷ ❸ ❹ ❺ ❻ ❼

● **Flat type with groove**

❶ Vacuum inlet direction

Nil	Pad unit
T	Vertical
Y	Lateral

❷ Pad diameter

04	ø4
06	ø6
08	ø8
10	ø10
13	ø13
16	ø16

❸ Material

N	NBR
S	Silicone rubber∗1
U	Urethane rubber
F	FKM
GN	Conductive NBR
GS	Conductive silicone rubber

∗1 Compliant with the FDA (USA Food and Drug Administration) regulation 21CFR§177.2600 for "Rubber articles intended for repeated use"

❹ Buffer specification

J	Rotating
JB	Rotating, With bushing
K	Non-rotating

❺ Buffer stroke

Stroke [mm]	Buffer specification		
	J	**JB**	**K**
3	●	—	●
6	●	—	●
10	●	—	●
15	—	●	●
20	—	●	●

With adapter

❻ Connection thread/ ❼ Vacuum inlet

○: ZP3-T/Vertical ●: ZP3-Y/Lateral

❻ Connection thread			❼ Vacuum inlet			Pad diameter [mm]	
Type	Symbol	Size	Type	Symbol	Size	ø4 to ø8	ø10 to ø16
Male thread	**A5**	M5 x 0.8	—	**Nil**	Use the connection thread.	○	○
	A10	M10 x 1	Female thread	**B5**	M5 x 0.8	○	—
			One-touch fitting	**02**	ø2	○	—
				04	ø4	○	—
			Barb fitting	**U2**	For ø2 polyurethane tubing∗1	○	—
				U4	For ø4 soft tubing∗2	○	—
	A12	M12 x 1	Female thread	**B5**	M5 x 0.8	—	○
			One-touch fitting	**02**	ø2	—	○
				04	ø4	—	○
				06	ø6	—	○
			Barb fitting	**U2**	For ø2 polyurethane tubing∗1	—	○
				U4	For ø4 soft tubing∗2	—	○
				U6	For ø6 soft tubing∗2	—	○
Female thread	**B5**	M5 x 0.8	—	**Nil**	Use the connection thread.	○	○
			Female thread	**B5**	M5 x 0.8	●	●
			One-touch fitting	**02**	ø2	●	●
				04	ø4	●	●
				06	ø6	—	●
			Barb fitting	**U2**	For ø2 polyurethane tubing∗1	●	●
				U4	For ø4 soft tubing∗2	●	●
				U6	For ø6 soft tubing∗2	—	●

With buffer

❼ Vacuum inlet

○: ZP3-T/Vertical ●: ZP3-Y/Lateral

Type	Symbol	Size	Pad diameter [mm]	
			ø4 to ø8	ø10 to ø16
Female thread	**B5**	M5 x 0.8	○●	○●
One-touch fitting	**02**	ø2	○●	○●
	04	ø4	○●	○●
	06	ø6	—	○●
Barb fitting	**U2**	For ø2 polyurethane tubing∗1	○●	○●
	U4	For ø4 soft tubing∗2	○●	○●
	U6	For ø6 soft tubing∗2	—	○●

∗1 Polyurethane tube piping
∗2 Soft nylon/Polyurethane tube piping
∗ It is not necessary to select a connection thread.

∗ The pad, mounting nut, and fitting are shipped together but do not come assembled.

Dimensions/Models

Single unit ø4 to ø16

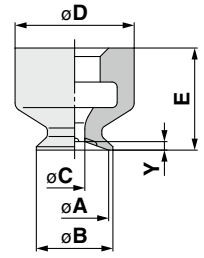

(ø4 to ø8)

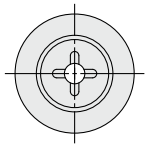

(ø10 to ø16)

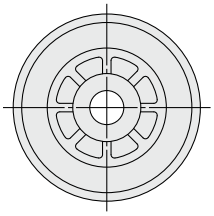

ZP3 – 04 UM N
❶ ❷

Model ❶ Pad dia.	Form	❷ *1 Material	A	B	C	D	E	Y
ZP3 04	UM	N S U F GN GS	4	4.5	1.2	7	6	0.5
06			6	6.5	2			0.8
08			8	8.5				
10			10	11		9	7	1
13			13	14				1.2
16			16	17				

*1 N: NBR, S: Silicone rubber, U: Urethane rubber, F: FKM, GN: Conductive NBR, GS: Conductive silicone rubber

Construction	p. 160
Mounting Bracket Assembly	From p. 162

With adapter ø4 to ø16

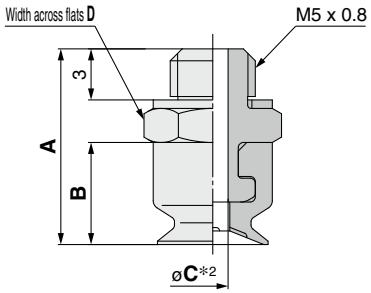

ZP3 – T 04 UM N – A5
❶ ❷ ❸

❸ **Connection thread (Male thread)**

A5	M5 x 0.8

Model	Vacuum inlet direction	❶ Pad dia.	Form	❷ *1 Material	❸ Connection thread	A	B	C*2	D
ZP3	T	04	UM	N S U F GN GS	A5	11.5	6	1.2	7
		06 08						1.8	
		10 13 16				12.5	7		10

*1 N: NBR, S: Silicone rubber, U: Urethane rubber, F: FKM, GN: Conductive NBR, GS: Conductive silicone rubber
*2 Indicates the minimum hole size of the adapter or vacuum pad

Construction	p. 160
Adapter Assembly	p. 162

With adapter ø4 to ø16

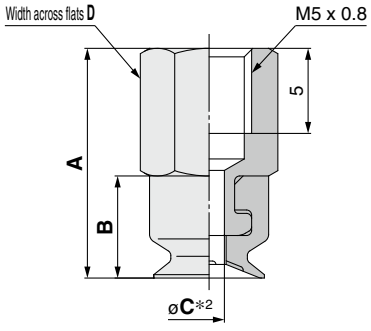

ZP3 – T 04 UM N – B5
❶ ❷ ❸

❸ **Connection thread (Female thread)**

B5	M5 x 0.8

Model	Vacuum inlet direction	❶ Pad dia.	Form	❷ *1 Material	❸ Connection thread	A	B	C*2	D
ZP3	T	04	UM	N S U F GN GS	B5	13.5	6	1.2	7
		06 08						1.8	
		10 13 16				14.5	7		10

*1 N: NBR, S: Silicone rubber, U: Urethane rubber, F: FKM, GN: Conductive NBR, GS: Conductive silicone rubber
*2 Indicates the minimum hole size of the adapter or vacuum pad

Construction	p. 160
Adapter Assembly	p. 162

Dimensions/Models

With adapter ø4 to ø16

Pad diameter: ø4 to ø6

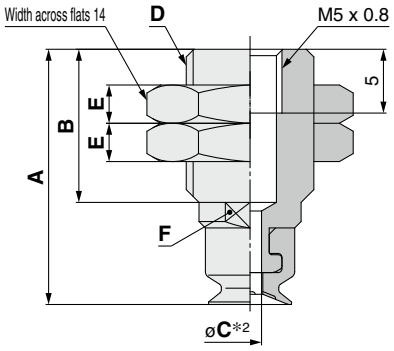

Pad diameter: ø10 to ø16

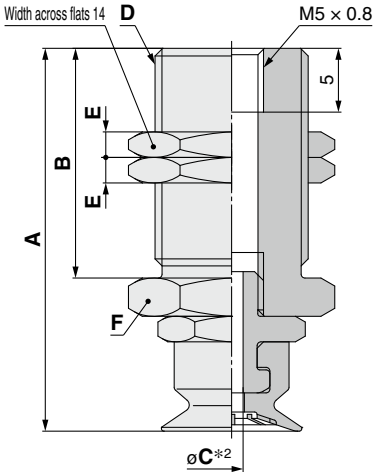

Vacuum inlet: One-touch fitting (ø2)

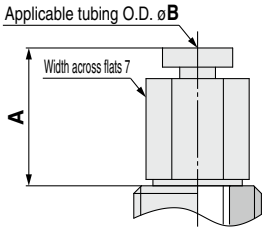

Vacuum inlet: Built-in One-touch fitting (ø4, ø6)

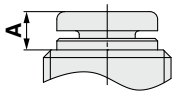

Vacuum inlet: Barb fitting

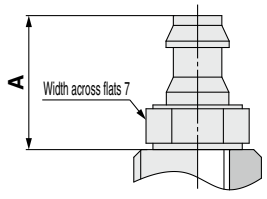

ZP3 – T ❶04 UM ❷N – ❸A10 – ❹B5

❸ Connection thread (Male thread)

A10	M10 x 1
A12	M12 x 1

❹ Vacuum inlet

B5	M5 x 0.8	Female thread
02	ø2	One-touch fitting
04	ø4	
06	ø6	
U2	For ø2 polyurethane tubing	Barb fitting
U4	For ø4 soft tubing	
U6	For ø6 soft tubing	

Model							A	B	C*2	D	E	F
	Vacuum inlet direction	❶ Pad dia.	Form	❷ *1 Material	❸ Connection thread	❹ Vacuum inlet						
ZP3	T	04	UM	N S U F GN GS	A10	B5	20	12	1.2	M10 x 1	3	Width across flats 7
		06 08							1.8			
		10 13 16			A12		30	18		M12 x 1	2	Width across flats 14

Dimensions Per Vacuum Inlet: One-touch Fitting

Model							A	B	Fitting part min. hole size	Fitting part no.
	Vacuum inlet direction	❶ Pad dia.	Form	❷ *1 Material	❸ Connection thread	❹ Vacuum inlet				
ZP3	T	04 06 08	UM	N S U F GN GS	A10	02	10.8	2	ø1.4	KQ2H02-M5N
						04	3	4	ø1.8	
		10 13 16			A12	02	10.8	2	ø1.4	KQ2H02-M5N
						04	3	4	ø1.8	
						06	3.2	6		

Dimensions Per Vacuum Inlet: Barb Fitting

Model							A	Fitting part min. hole size	Fitting part no.
	Vacuum inlet direction	❶ Pad dia.	Form	❷ *1 Material	❸ Connection thread	❹ Vacuum inlet			
ZP3	T	04 06 08	UM	N S U F GN GS	A10	U2	6.5	ø0.9	M-5AU-2
						U4	8.5	ø1.8	M-5AU-4
		10 13 16			A12	U2	6.5	ø0.9	M-5AU-2
						U4	8.5	ø1.8	M-5AU-4
						U6	10.5	ø2.5	M-5AU-6

*1 N: NBR, S: Silicone rubber, U: Urethane rubber, F: FKM, GN: Conductive NBR, GS: Conductive silicone rubber

*2 Indicates the minimum hole size of the adapter or vacuum pad

Construction	p. 160
Adapter Assembly	p. 163

Dimensions/Models

With adapter ø4 to ø16

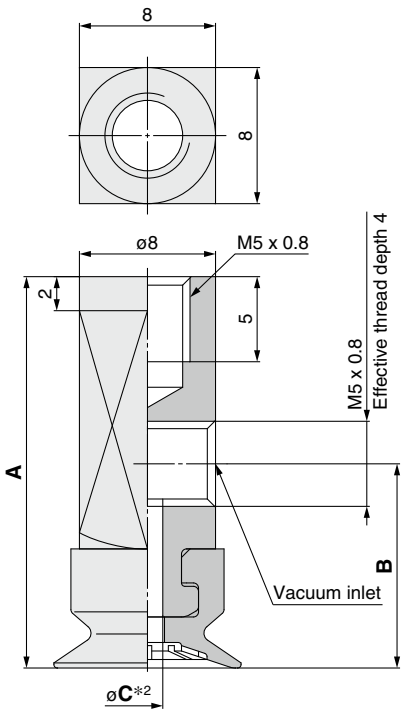

ZP3 – Y 04 UM N – B5 – B5

❶ ❷ ❸ ❹

❸ **Connection thread (Female thread)**

B5	M5 x 0.8

❹ **Vacuum inlet**

B5	M5 x 0.8	Female thread
02	ø2	One-touch fitting
04	ø4	
06	ø6	
U2	For ø2 polyurethane tubing	Barb fitting
U4	For ø4 soft tubing	
U6	For ø6 soft tubing	

Model							A	B	C*2
	Vacuum inlet direction	❶ Pad dia.	Form	❷ *1 Material	❸ Connection thread	❹ Vacuum inlet			
ZP3	Y	04	UM	N S U F GN GS	B5	B5	22	11	1.2
		06 08							2
		10 13 16					23	12	

Vacuum inlet: One-touch fitting

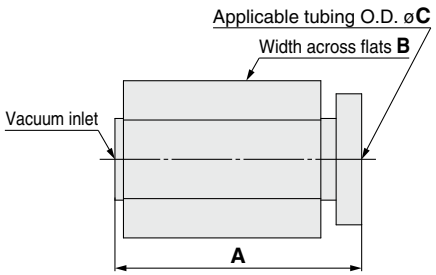

Vacuum inlet: Barb fitting

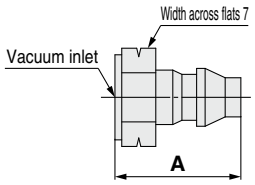

Dimensions Per Vacuum Inlet: One-touch Fitting

Model							A	B	C	Fitting part min. hole size	Fitting part no.
	Vacuum inlet direction	❶ Pad dia.	Form	❷ *1 Material	❸ Connection thread	❹ Vacuum inlet					
ZP3	Y	04 06 08	UM	N S U F GN GS	B3	02	10.8	7	2	ø1.4	KQ2H02-M5N
						04	14.7	8	4	ø2.5	KQ2H04-M5N
		10 13 16				02	10.8	7	2	ø1.4	KQ2H02-M5N
						04	14.7	8	4	ø2.5	KQ2H04-M5N
						06		10	6		KQ2H06-M5N

Dimensions Per Vacuum Inlet: Barb Fitting

Model							A	Fitting part min. hole size	Fitting part no.
	Vacuum inlet direction	❶ Pad dia.	Form	❷ *1 Material	❸ Connection thread	❹ Vacuum inlet			
ZP3	Y	04 06 08	UM	N S U F GN GS	B5	U2	6.5	ø0.9	M-5AU-2
						U4	8.5	ø1.8	M-5AU-4
		10 13 16				U2	6.5	ø0.9	M-5AU-2
						U4	8.5	ø1.8	M-5AU-4
						U6	10.5	ø2.5	M-5AU-6

*1 N: NBR, S: Silicone rubber, U: Urethane rubber, F: FKM, GN: Conductive NBR, GS: Conductive silicone rubber

*2 Indicates the minimum hole size of the adapter or vacuum pad

Construction	p. 160
Adapter Assembly	p. 162

Dimensions/Models

With buffer ø4 to ø16

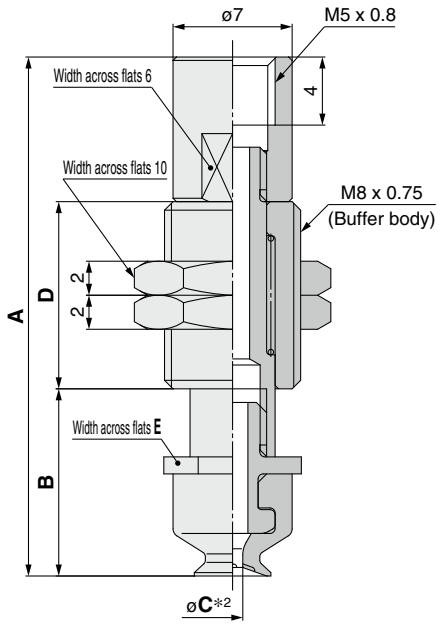

ZP3 – T 04 UM N J 3 – B5
❶ ❷ ❸ ❹ ❺

❸ Buffer specification

J	Rotating
JB	Rotating, With bushing
K	Non-rotating

❺ Vacuum inlet

B5	M5 x 0.8	Female thread
02	ø2	One-touch fitting
04	ø4	
06	ø6	
U2	For ø2 polyurethane tubing	Barb fitting
U4	For ø4 soft tubing	
U6	For ø6 soft tubing	

Model								A	B	C*2	D	E
	Vacuum inlet direction	❶ Pad dia.	Form	❷ *1 Material	❸ Buffer spec.	❹ Buffer stroke	❺ Vacuum inlet					
ZP3	T	04	UM	N S U F GN GS	J K	3	B5	30.5	11	1.2	11	7
						6		37	14	1.8	14.5	
						10		47	18		20.5	
		06 08				3		30.5	11		11	
						6		37	14		14.5	
						10		47	18		20.5	
		04			JB K	15		55	36.5	1.2	10	
						20		62.5	44	1.8		
		06 08				15		55	36.5			
						20		62.5	44			
		10 13 16			J K	3		31.5	12	1.8	11	10
						6		38	15		14.5	
						10		48	19		20.5	
					JB K	15		56	37.5		10	
						20		63.5	45			

Vacuum inlet: One-touch fitting

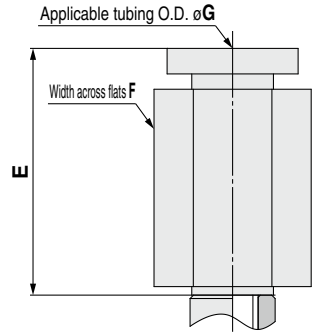

Vacuum inlet: Barb fitting

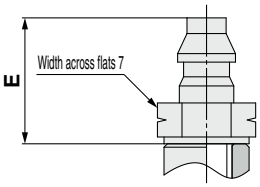

Construction	p. 161
Buffer Assembly	p. 164

Dimensions Per Vacuum Inlet: One-touch Fitting

Model								E	F	G	Fitting part min. hole size	Fitting part no.
	Vacuum inlet direction	❶ Pad dia.	Form	❷ *1 Material	❸ Buffer spec.	❹ Buffer stroke	❺ Vacuum inlet					
ZP3	T	04 06 08	UM	N S U F GN GS	J JB K	3 6 10 15 20	02	10.8	7	2	ø1.4	KQ2H02-M5N
							04	14.7	8	4	ø2.5	KQ2H04-M5N
		10 13 16					02	10.8	7	2	ø1.4	KQ2H02-M5N
							04	14.7	8	4	ø2.5	KQ2H04-M5N
							06		10	6		KQ2H06-M5N

Dimensions Per Vacuum Inlet: Barb Fitting

Model								E	Fitting part min. hole size	Fitting part no.
	Vacuum inlet direction	❶ Pad dia.	Form	❷ *1 Material	❸ Buffer spec.	❹ Buffer stroke	❺ Vacuum inlet			
ZP3	T	04 06 08	UM	N S U F GN GS	J JB K	3 6 10 15 20	U2	6.5	ø0.9	M-5AU-2
							U4	8.5	ø1.8	M-5AU-4
		10 13 16					U2	6.5	ø0.9	M-5AU-2
							U4	8.5	ø1.8	M-5AU-4
							U6	10.5	ø2.5	M-5AU-6

*1 N: NBR, S: Silicone rubber, U: Urethane rubber, F: FKM, GN: Conductive NBR, GS: Conductive silicone rubber

*2 Indicates the minimum hole size of the adapter or vacuum pad

Dimensions/Models

With buffer ø4 to ø16

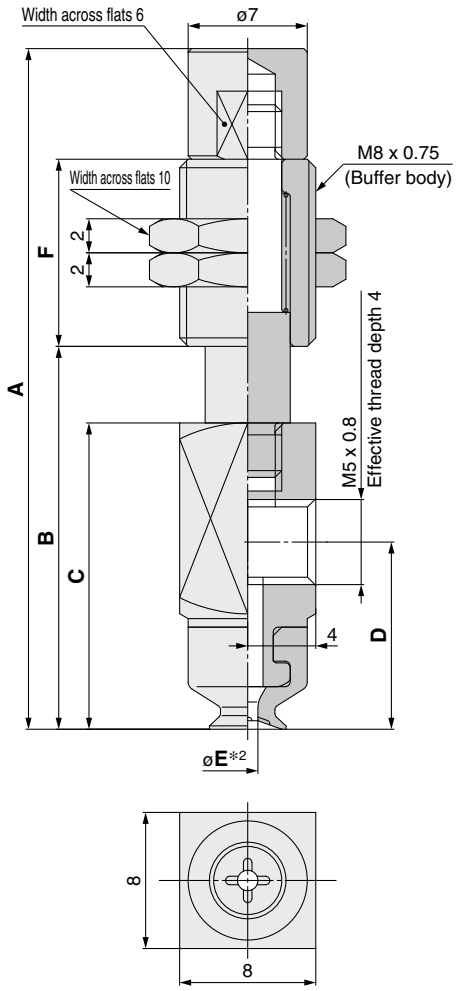

Vacuum inlet: One-touch fitting

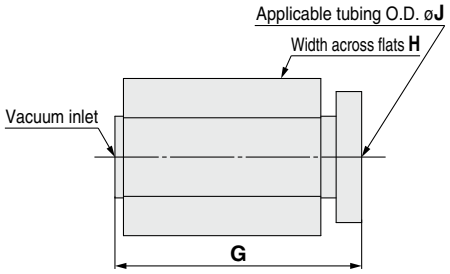

Vacuum inlet: Barb fitting

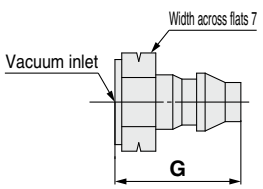

Construction	p. 161
Buffer Assembly	p. 164

ZP3 – Y ❶04 UM ❷N ❸J ❹3 – ❺B5

❸ Buffer specification

J	Rotating
JB	Rotating, With bushing
K	Non-rotating

❺ Vacuum inlet

B5	M5 x 0.8	Female thread
02	ø2	One-touch fitting
04	ø4	
06	ø6	
U2	For ø2 polyurethane tubing	Barb fitting
U4	For ø4 soft tubing	
U6	For ø6 soft tubing	

Model													
	❶ Vacuum inlet direction	❶ Pad dia.	Form	❷ *1 Material	❸ Buffer spec.	❹ Buffer stroke	❺ Vacuum inlet	A	B	C	D	E*2	F
ZP3	Y	04	UM	N S U F GN GS	J K	3	B5	40	22.5	18	11	1.2	11
						6		46	25			1.8	14.5
						10		56	29				20.5
		06 08				3		40	22.5				11
						6		46	25				14.5
						10		56	29				20.5
		04			JB K	15		59	42.5			1.2	10
						20		66.5	50			1.8	
		06 08				15		59	42.5				
						20		66.5	50				
		10 13 16			J K	3		41	23.5	19	12	1.8	11
						6		47	26				14.5
						10		57	30				20.5
					JB K	15		60	43.5				10
						20		67.5	57				

Dimensions Per Vacuum Inlet: One-touch Fitting

Model								G	H	J	Fitting part min. hole size	Fitting part no.
	❶ Vacuum inlet direction	❶ Pad dia.	Form	❷ *1 Material	❸ Buffer spec.	❹ Buffer stroke	❺ Vacuum inlet					
ZP3	Y	04 06 08	UM	N S U F GN GS	J JB K	3 6 10 15 20	02	10.8	7	2	ø1.4	KQ2H02-M5N
							04	14.7	8	4	ø2.5	KQ2H04-M5N
		10 13 16					02	10.8	7	2	ø1.4	KQ2H02-M5N
							04	14.7	8	4	ø2.5	KQ2H04-M5N
							06		10	6		KQ2H06-M5N

Dimensions Per Vacuum Inlet: Barb Fitting

Model								G	Fitting part min. hole size	Fitting part no.
	❶ Vacuum inlet direction	❶ Pad dia.	Form	❷ *1 Material	❸ Buffer spec.	❹ Buffer stroke	❺ Vacuum inlet			
ZP3	Y	04 06 08	UM	N S U F GN GS	J JB K	3 6 10 15 20	U2	6.5	ø0.9	M-5AU-2
							U4	8.5	ø1.8	M-5AU-4
		10 13 16					U2	6.5	ø0.9	M-5AU-2
							U4	8.5	ø1.8	M-5AU-4
							U6	10.5	ø2.5	M-5AU-6

*1 N: NBR, S: Silicone rubber, U: Urethane rubber, F: FKM, GN: Conductive NBR, GS: Conductive silicone rubber

*2 Indicates the minimum hole size of the adapter or vacuum pad

Compact Type
Bellows Type
ZP3 Series
Pad diameter: ø4, ø6, ø8



How to Order

		Dimensions/ Models	Construction	Mounting Bracket Assembly
Pad unit	ZP3 – 04 B N	p. 149	p. 160	From p. 162
With adapter	ZP3 – T 04 B N – A5 –	From p. 149	p. 160	From p. 162
With buffer	ZP3 – T 04 B N J 3 – B5	From p. 152	p. 161	p. 164

∗ Pad unit's sales unit: 10 pcs.

❶ ❷ ❸ ❹ ❺ ❻ ❼

● Bellows type

❶ Vacuum inlet direction

Nil	Pad unit
T	Vertical
Y	Lateral

❷ Pad diameter

04	ø4
06	ø6
08	ø8

❺ Buffer stroke

Stroke [mm]	Buffer specification		
	J	**JB**	**K**
3	●	—	●
6	●	—	●
10	●	—	●
15	—	●	●
20	—	●	●

❸ Material

N	NBR
S	Silicone rubber∗1
U	Urethane rubber
F	FKM
GN	Conductive NBR
GS	Conductive silicone rubber

❹ Buffer specification

J	Rotating
JB	Rotating, With bushing
K	Non-rotating

∗1 Compliant with the FDA (USA Food and Drug Administration) regulation 21CFR§177.2600 for "Rubber articles intended for repeated use"

With adapter

❻ Connection thread/ ❼ Vacuum inlet

○: ZP3-T/Vertical ●: ZP3-Y/Lateral

❻ Connection thread			❼ Vacuum inlet			Pad diameter
Type	Symbol	Size	Type	Symbol	Size	All sizes
Male thread	**A5**	M5 x 0.8	—	**Nil**	Use the connection thread.	○
	A10	M10 x 1	Female thread	**B5**	M5 x 0.8	○
			One-touch fitting	**02**	ø2	○
				04	ø4	○
			Barb fitting	**U2**	For ø2 polyurethane tubing	○
				U4	For ø4 soft tubing	○
Female thread	**B5**	M5 x 0.8	—	**Nil**	Use the connection thread.	○
			Female thread	**B5**	M5 x 0.8	●
			One-touch fitting	**02**	ø2	●
				04	ø4	●
			Barb fitting	**U2**	For ø2 polyurethane tubing∗1	●
				U4	For ø4 soft tubing∗2	●

∗1 Polyurethane tube piping
∗2 Soft nylon/Polyurethane tube piping

With buffer

❼ Vacuum inlet

○: ZP3-T/Vertical ●: ZP3-Y/Lateral

Type	Symbol	Size	Pad diameter
			All sizes
Female thread	**B5**	M5 x 0.8	○●
One-touch fitting	**02**	ø2	○●
	04	ø4	○●
Barb fitting	**U2**	For ø2 polyurethane tubing∗1	○●
	U4	For ø4 soft tubing∗2	○●

∗ It is not necessary to select a connection thread.

∗ The pad, mounting nut, and fitting are shipped together but do not come assembled.

Dimensions/Models

Single unit ø4 to ø8

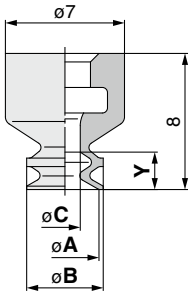

Construction	p. 160
Mounting Bracket Assembly	From p. 162

ZP3 – 04 B N
❶ ❷

Model				A	B	C	Y
	❶ Pad dia.	Form	❷ *1 Material				
ZP3	04	B	N S U F GN GS	4	4.5	1.8	2.2
	06			6	7	2	3
	08			8	9		

*1 N: NBR, S: Silicone rubber, U: Urethane rubber, F: FKM, GN: Conductive NBR, GS: Conductive silicone rubber

With adapter ø4 to ø8

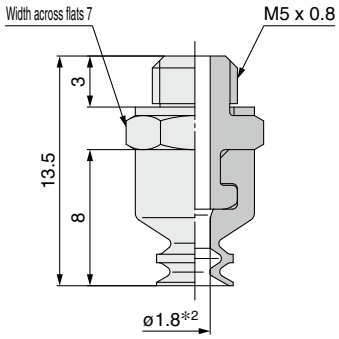

Construction	p. 160
Adapter Assembly	p. 162

ZP3 – T 04 B N – A5
❶ ❷ ❸

❸ **Connection thread (Male thread)**

A5	M5 x 0.8

Model						
	Vacuum inlet direction	❶ Pad dia.	Form	❷ *1 Material	❸ Connection thread
ZP3	T	04 06 08	B	N S U F GN GS	A5

*1 N: NBR, S: Silicone rubber, U: Urethane rubber, F: FKM, GN: Conductive NBR, GS: Conductive silicone rubber
*2 Indicates the minimum hole size of the adapter or vacuum pad

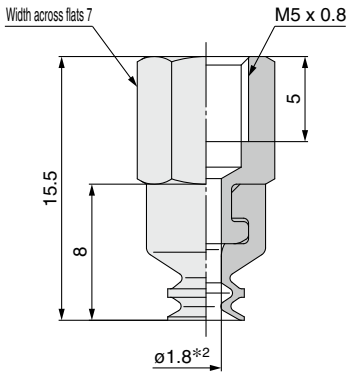

Construction	p. 160
Adapter Assembly	p. 162

ZP3 – T 04 B N – B5
❶ ❷ ❸

❸ **Connection thread (Female thread)**

B5	M5 x 0.8

Model						
	Vacuum inlet direction	❶ Pad dia.	Form	❷ *1 Material	❸ Connection thread
ZP3	T	04 06 08	B	N S U F GN GS	B5

*1 N: NBR, S: Silicone rubber, U: Urethane rubber, F: FKM, GN: Conductive NBR, GS: Conductive silicone rubber
*2 Indicates the minimum hole size of the adapter or vacuum pad

Dimensions/Models

With adapter ø4 to ø8

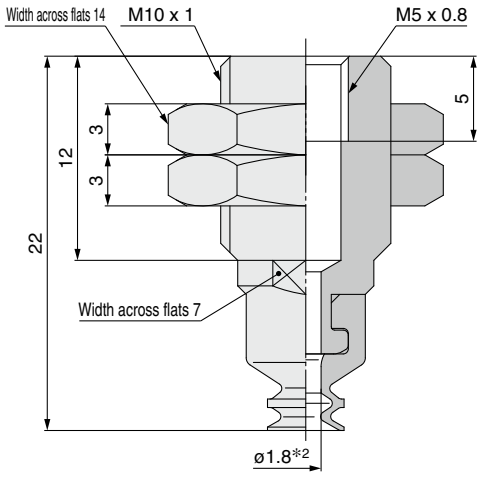

ZP3 – T 04 B N – A10 – B5
❶ ❷ ❸ ❹

❸ **Connection thread (Female thread)**

A10	M10 x 1

❹ **Vacuum inlet**

B5	M5 x 0.8	Female thread
02	ø2	One-touch fitting
04	ø4	
U2	For ø2 polyurethane tubing	Barb fitting
U4	For ø4 soft tubing	

Model							
	Vacuum inlet direction	❶ Pad dia.	Form	❷ *1 Material	❸ Connection thread	❹ Vacuum inlet
ZP3	T	04 06 08	B	N S U F GN GS	A10	B5

Vacuum inlet: One-touch fitting (ø2)

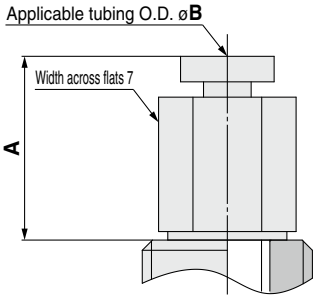

Vacuum inlet: Built-in One-touch fitting (ø4)

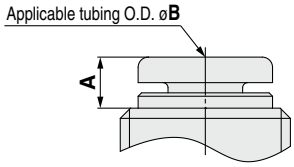

Vacuum inlet: Barb fitting

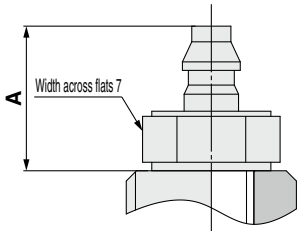

Construction	p. 160
Adapter Assembly	p. 163

Dimensions Per Vacuum Inlet: One-touch Fitting

Model							A	B	Fitting part min. hole size	Fitting part no.
	Vacuum inlet direction	❶ Pad dia.	Form	❷ *1 Material	❸ Connection thread	❹ Vacuum inlet				
ZP3	T	04 06 08	B	N S U F GN GS	A10	02	10.8	2	ø1.4	KQ2H02-M5N
						04	3	4	ø1.8	

Dimensions Per Vacuum Inlet: Barb Fitting

Model							A	Fitting part min. hole size	Fitting part no.
	Vacuum inlet direction	❶ Pad dia.	Form	❷ *1 Material	❸ Connection thread	❹ Vacuum inlet			
ZP3	T	04 06 08	B	N S U F GN GS	A10	U2	6.5	ø0.9	M-5AU-2
						U4	8.5	ø1.8	M-5AU-4

*1 N: NBR, S: Silicone rubber, U: Urethane rubber, F: FKM, GN: Conductive NBR, GS: Conductive silicone rubber

*2 Indicates the minimum hole size of the adapter or vacuum pad

Dimensions/Models

With adapter ø4 to ø8

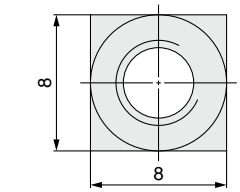

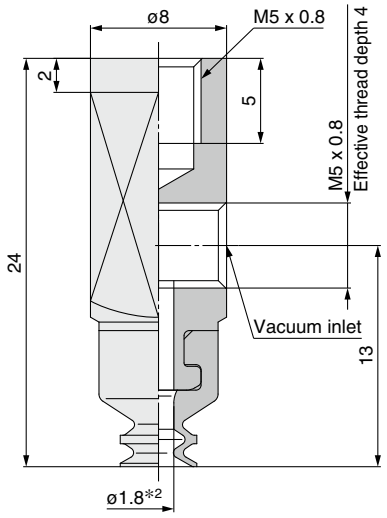

ZP3 – Y 04 B N – B5 – B5
❶ ❷ ❸ ❹

❸ Connection thread (Female thread)

B5	M5 x 0.8

❹ Vacuum inlet

B5	M5 x 0.8	Female thread
02	ø2	One-touch fitting
04	ø4	
U2	For ø2 polyurethane tubing	Barb fitting
U4	For ø4 soft tubing	

Model							
	Vacuum inlet direction	❶ Pad dia.	Form	❷ *1 Material	❸ Connection thread	❹ Vacuum inlet
ZP3	Y	04 06 08	B	N S U F GN GS	B5	B5

Vacuum inlet: One-touch fitting

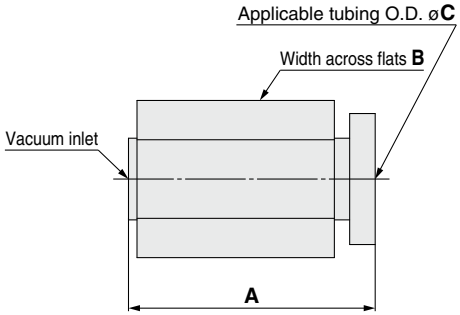

Vacuum inlet: Barb fitting

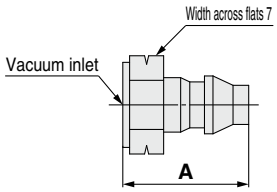

Construction	p. 160
Adapter Assembly	p. 162

Dimensions Per Vacuum Inlet: One-touch Fitting

Model							A	B	C	Fitting part min. hole size	Fitting part no.
	Vacuum inlet direction	❶ Pad dia.	Form	❷ *1 Material	❸ Connection thread	❹ Vacuum inlet					
ZP3	Y	04 06 08	B	N S U F GN GS	B5	02	10.8	7	2	ø1.4	KQ2H02-M5N
						04	14.7	8	4	ø2.5	KQ2H04-M5N

Dimensions Per Vacuum Inlet: Barb Fitting

Model							A	Fitting part min. hole size	Fitting part no.
	Vacuum inlet direction	❶ Pad dia.	Form	❷ *1 Material	❸ Connection thread	❹ Vacuum inlet			
ZP3	Y	04 06 08	B	N S U F GN GS	B5	U2	6.5	ø0.9	M-5AU-2
						U4	8.5	ø1.8	M-5AU-4

*1 N: NBR, S: Silicone rubber, U: Urethane rubber, F: FKM, GN: Conductive NBR, GS: Conductive silicone rubber

*2 Indicates the minimum hole size of the adapter or vacuum pad

Dimensions/Models

With buffer ø4 to ø8

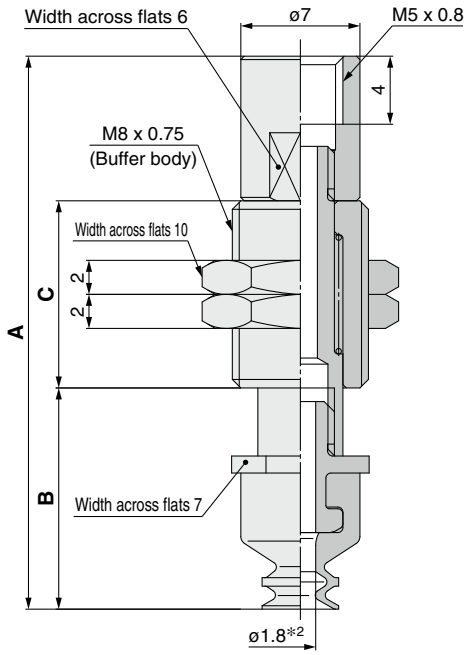

ZP3 – T 04 B N J 3 – B5
❶ ❷ ❹ ❺

Buffer specification ❸

J	Rotating
JB	Rotating, With bushing
K	Non-rotating

❺ Vacuum inlet

B5	M5 x 0.8	Female thread
02	ø2	One-touch fitting
04	ø4	
U2	For ø2 polyurethane tubing	Barb fitting
U4	For ø4 soft tubing	

Model								A	B	C
	Vacuum inlet direction	❶ Pad dia.	Form	❷ *1 Material	❸ Buffer spec.	❹ Buffer stroke	❺ Vacuum inlet			
ZP3	T	04 06 08	B	N S U F GN GS	J K	3	B5	32.5	13	11
						6		39	16	14.5
						10		49	20	20.5
					JB K	15		57	38.5	10
						20		64.5	46	

Vacuum inlet: One-touch fitting

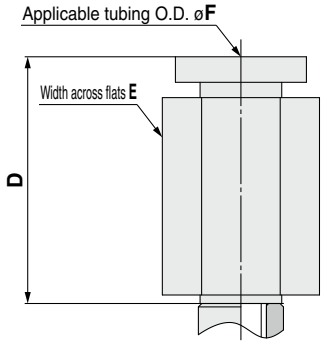

Vacuum inlet: Barb fitting

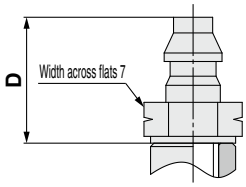

Dimensions Per Vacuum Inlet: One-touch Fitting

Model								D	E	F	Fitting part min. hole size	Fitting part no.
	Vacuum inlet direction	❶ Pad dia.	Form	❷ *1 Material	❸ Buffer spec.	❹ Buffer stroke	❺ Vacuum inlet					
ZP3	T	04 06 08	B	N S U F GN GS	J JB K	3 6 10 15 20	02	10.8	7	2	ø1.4	KQ2H02-M5N
							04	14.7	8	4	ø2.5	KQ2H04-M5N

Dimensions Per Vacuum Inlet: Barb Fitting

Model								D	Fitting part min. hole size	Fitting part no.
	Vacuum inlet direction	❶ Pad dia.	Form	❷ *1 Material	❸ Buffer spec.	❹ Buffer stroke	❺ Vacuum inlet			
ZP3	T	04 06 08	B	N S U F GN GS	J JB K	3 6 10 15 20	U2	6.5	ø0.9	M-5AU-2
							U4	8.5	ø1.8	M-5AU-4

*1 N: NBR, S: Silicone rubber, U: Urethane rubber, F: FKM, GN: Conductive NBR, GS: Conductive silicone rubber
*2 Indicates the minimum hole size of the adapter or vacuum pad

Construction	p. 161
Buffer Assembly	p. 164

Dimensions/Models

With buffer ø4 to ø8

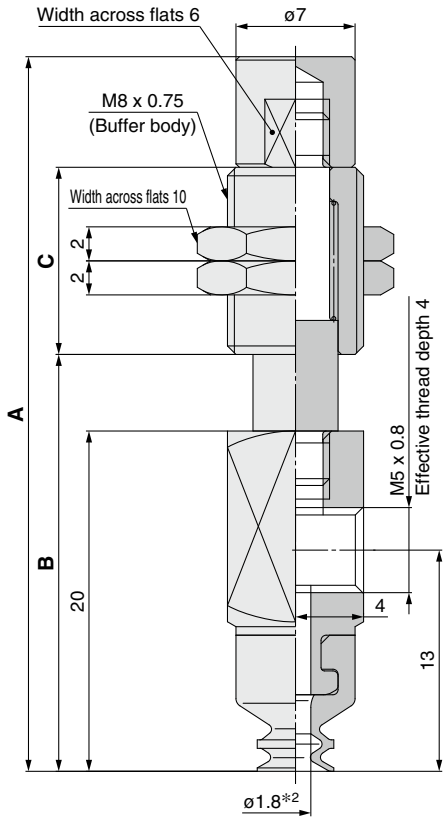

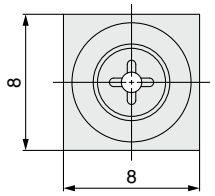

ZP3 – Y 04 B N J 3 – B5
❶ ❷ ❸ ❹ ❺

❸ Buffer specification

J	Rotating
JB	Rotating, With bushing
K	Non-rotating

❺ Vacuum inlet

B5	M5 x 0.8	Female thread
02	ø2	One-touch fitting
04	ø4	
U2	For ø2 polyurethane tubing	Barb fitting
U4	For ø4 soft tubing	

Model								A	B	C
	Vacuum inlet direction	❶ Pad dia.	Form	❷ *1 Material	❸ Buffer spec.	❹ Buffer stroke	❺ Vacuum inlet			
ZP3	Y	04 06 08	B	N S U F GN GS	J K	3	B5	42	24.5	11
						6		48	27	14.5
						10		58	31	20.5
					JB K	15		61	44.5	10
						20		68.5	52	

Dimensions Per Vacuum Inlet: One-touch Fitting

Model								D	E	F	Fitting part min. hole size	Fitting part no.
	Vacuum inlet direction	❶ Pad dia.	Form	❷ *1 Material	❸ Buffer spec.	❹ Buffer stroke	❺ Vacuum inlet					
ZP3	Y	04 06 08	B	N S U F GN GS	J JB K	3 6 10 15 20	02	10.8	7	2	ø1.4	KQ2H02-M5N
							04	14.7	8	4	ø2.5	KQ2H04-M5N

Dimensions Per Vacuum Inlet: Barb Fitting

Model								D	Fitting part min. hole size	Fitting part no.
	Vacuum inlet direction	❶ Pad dia.	Form	❷ *1 Material	❸ Buffer spec.	❹ Buffer stroke	❺ Vacuum inlet			
ZP3	Y	04 06 08	B	N S U F GN GS	J JB K	3 6 10 15 20	U2	6.5	ø0.9	M-5AU-2
							U4	8.5	ø1.8	M-5AU-4

*1 N: NBR, S: Silicone rubber, U: Urethane rubber, F: FKM, GN: Conductive NBR, GS: Conductive silicone rubber
*2 Indicates the minimum hole size of the adapter or vacuum pad

Vacuum inlet: One-touch fitting

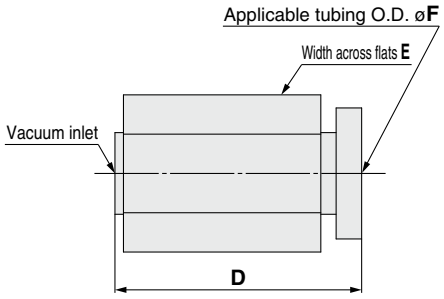

Vacuum inlet: Barb fitting

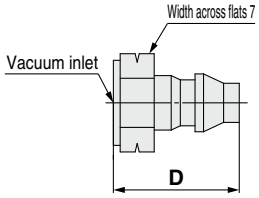

Construction	p. 161
Buffer Assembly	p. 164

Compact Type
Bellows Type with Ribs
ZP3 Series
Pad diameter: ø10, ø13, ø16



How to Order

		Dimensions/ Models	Construction	Mounting Bracket Assembly
Pad unit	ZP3 – 10 B N	p. 155	p. 160	From p. 162
With adapter	ZP3 – T 10 B N – A5 –	From p. 155	p. 160	From p. 162
With buffer	ZP3 – T 10 B N J 3 – B5	From p. 158	p. 161	p. 164

∗ Pad unit's sales unit: 10 pcs.

❶ ❷ ❸ ❹ ❺ ❻ ❼

● Bellows type with ribs

❶ Vacuum inlet direction

Nil	Pad unit
T	Vertical
Y	Lateral

❷ Pad diameter

10	ø10
13	ø13
16	ø16

❸ Material

N	NBR
S	Silicone rubber∗1
U	Urethane rubber
F	FKM
GN	Conductive NBR
GS	Conductive silicone rubber

∗1 Compliant with the FDA (USA Food and Drug Administration) regulation 21CFR§177.2600 for "Rubber articles intended for repeated use"

❹ Buffer specification

J	Rotating
JB	Rotating, With bushing
K	Non-rotating

❺ Buffer stroke

Stroke [mm]	Buffer specification		
	J	**JB**	**K**
3	●	—	●
6	●	—	●
10	●	—	●
15	—	●	●
20	—	●	●

With adapter

❻ Connection thread/ ❼ Vacuum inlet

○: ZP3-T/Vertical ●: ZP3-Y/Lateral

❻ Connection thread			❼ Vacuum inlet			Pad diameter
Type	Symbol	Size	Type	Symbol	Size	All sizes
Male thread	**A5**	M5 x 0.8	—	**Nil**	Use the connection thread.	○
	A12	M12 x 1	Female thread	**B5**	M5 x 0.8	○
			One-touch fitting	**02**	ø2	○
				04	ø4	○
				06	ø6	○
			Barb fitting	**U2**	For ø2 polyurethane tubing	○
				U4	For ø4 soft tubing	○
				U6	For ø6 soft tubing	○
Female thread	**B5**	M5 x 0.8	—	**Nil**	Use the connection thread.	○
			Female thread	**B5**	M5 x 0.8	●
			One-touch fitting	**02**	ø2	●
				04	ø4	●
				06	ø6	●
			Barb fitting	**U2**	For ø2 polyurethane tubing∗1	●
				U4	For ø4 soft tubing∗2	●
				U6	For ø6 soft tubing∗2	●

∗1 Polyurethane tube piping
∗2 Soft nylon/Polyurethane tube piping

With buffer

❼ Vacuum inlet

○: ZP3-T/Vertical ●: ZP3-Y/Lateral

Type	Symbol	Size	Pad diameter All sizes
Female thread	**B5**	M5 x 0.8	○●
One-touch fitting	**02**	ø2	○●
	04	ø4	○●
	06	ø6	○●
Barb fitting	**U2**	For ø2 polyurethane tubing	○●
	U4	For ø4 soft tubing	○●
	U6	For ø6 soft tubing	○●

∗ It is not necessary to select a connection thread.

∗ The pad, mounting nut, and fitting are shipped together but do not come assembled.

Dimensions/Models

Single unit ø10 to ø16

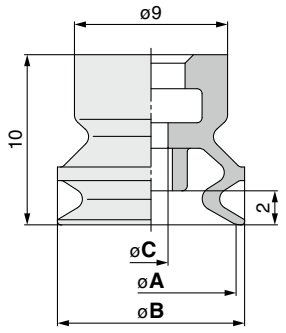

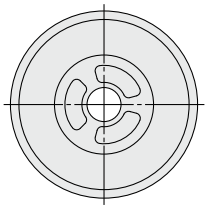

ZP3 – 10 B N
❶ ❷

Model				A	B	C
	❶ Pad dia.	Form	❷ *1 Material			
ZP3	10	B	N S U F GN GS	10	11	2
	13			13	14	3
	16			16	17	

*1 N: NBR, S: Silicone rubber, U: Urethane rubber, F: FKM, GN: Conductive NBR, GS: Conductive silicone rubber

Construction	p. 160
Mounting Bracket Assembly	From p. 162

With adapter ø10 to ø16

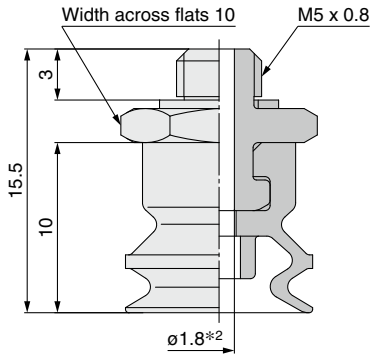

ZP3 – T 10 B N – A5
❶ ❷ ❸

❸ Connection thread (Male thread)

A5	M5 x 0.8

Model					
	Vacuum inlet direction	❶ Pad dia.	Form	❷ *1 Material	❸ Connection thread
ZP3	T	10 13 16	B	N S U F GN GS	A5

*1 N: NBR, S: Silicone rubber, U: Urethane rubber, F: FKM, GN: Conductive NBR, GS: Conductive silicone rubber
*2 Indicates the minimum hole size of the adapter or vacuum pad

Construction	p. 160
Adapter Assembly	p. 162

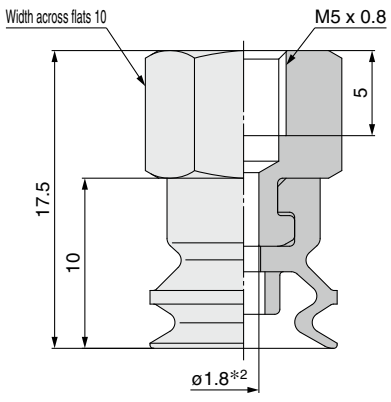

ZP3 – T 10 B N – B5
❶ ❷ ❸

❸ Connection thread (Female thread)

B5	M5 x 0.8

Model					
	Vacuum inlet direction	❶ Pad dia.	Form	❷ *1 Material	❸ Connection thread
ZP3	T	10 13 16	B	N S U F GN GS	B5

*1 N: NBR, S: Silicone rubber, U: Urethane rubber, F: FKM, GN: Conductive NBR, GS: Conductive silicone rubber
*2 Indicates the minimum hole size of the adapter or vacuum pad

Construction	p. 160
Adapter Assembly	p. 162

Dimensions/Models

With adapter ø10 to ø16

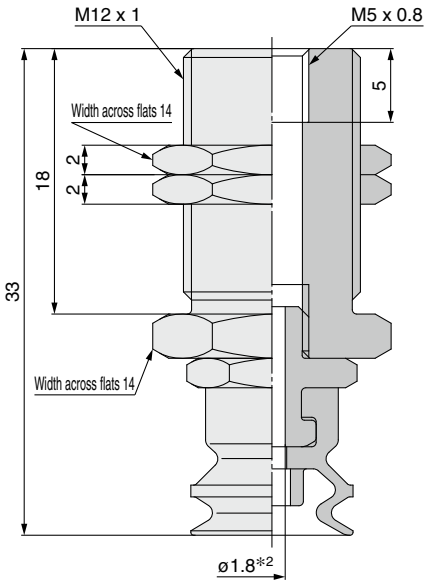

ZP3 – T ❶10 B ❷N – ❸A12 – ❹B5

❸ Connection thread (Male thread)

A12	M12 x 1

❹ Vacuum inlet

B5	M5 x 0.8	Female thread
02	ø2	One-touch fitting
04	ø4	
06	ø6	
U2	For ø2 polyurethane tubing	Barb fitting
U4	For ø4 soft tubing	
U6	For ø6 soft tubing	

Model						
	Vacuum inlet direction	❶ Pad dia.	Form	❷ *1 Material	❸ Connection thread	❹ Vacuum inlet
ZP3	**T**	**10 13 16**	**B**	**N S U F GN GS**	**A12**	**B5**

Vacuum inlet: One-touch fitting

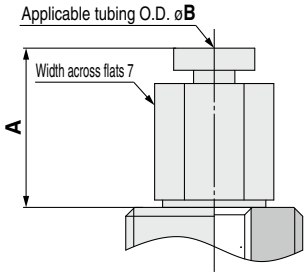

Vacuum inlet: Built-in One-touch fitting (ø4, ø6)

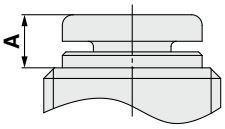

Vacuum inlet: Barb fitting

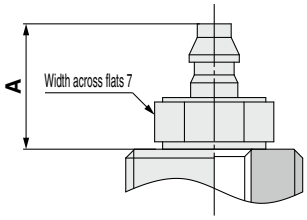

Dimensions Per Vacuum Inlet: One-touch Fitting

Model							A	B	Fitting part min. hole size	Fitting part no.
	Vacuum inlet direction	❶ Pad dia.	Form	❷ *1 Material	❸ Connection thread	❹ Vacuum inlet				
ZP3	**T**	**10 13 16**	**B**	**N S U F GN GS**	**A12**	**02**	10.8	2	ø1.4	KQ2H02-M5N
						04	3	4	ø1.8	
						06	3.2	6		

Dimensions Per Vacuum Inlet: Barb Fitting

Model							A	Fitting part min. hole size	Fitting part no.
	Vacuum inlet direction	❶ Pad dia.	Form	❷ *1 Material	❸ Connection thread	❹ Vacuum inlet			
ZP3	**T**	**10 13 16**	**B**	**N S U F GN GS**	**A12**	**U2**	6.5	ø0.9	M-5AU-2
						U4	8.5	ø1.8	M-5AU-4
						U6	10.5	ø2.5	M-5AU-6

*1 N: NBR, S: Silicone rubber, U: Urethane rubber, F: FKM, GN: Conductive NBR, GS: Conductive silicone rubber

*2 Indicates the minimum hole size of the adapter or vacuum pad

Construction	p. 160
Adapter Assembly	p. 163

Dimensions/Models

With adapter ø10 to ø16

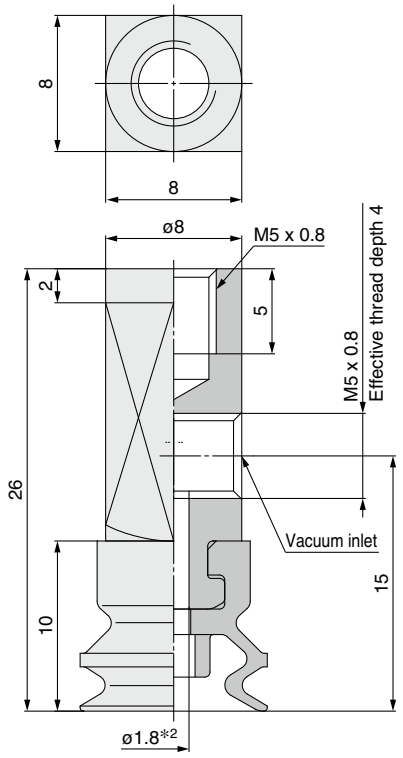

ZP3 – Y 10 B N – B5 – B5
❶ ❷ ❸ ❹

❸ Connection thread (Female thread)

B5	M5 x 0.8

❹ Vacuum inlet

B5	M5 x 0.8	Female thread
02	ø2	One-touch fitting
04	ø4	
06	ø6	
U2	For ø2 polyurethane tubing	Barb fitting
U4	For ø4 soft tubing	
U6	For ø6 soft tubing	

Model						
	Vacuum inlet direction	❶ Pad dia.	Form	❷ Material *1	❸ Connection thread	❹ Vacuum inlet
ZP3	**Y**	**10 13 16**	**B**	**N S U F GN GS**	**B5**	**B5**

Dimensions Per Vacuum Inlet: One-touch Fitting

Model							A	B	C	Fitting part min. hole size	Fitting part no.
	Vacuum inlet direction	❶ Pad dia.	Form	❷ Material *1	❸ Connection thread	❹ Vacuum inlet					
ZP3	**Y**	**10 13 16**	**B**	**N S U F GN GS**	**B5**	**02**	10.8	7	2	ø1.4	KQ2H02-M5N
						04	14.7	8	4	ø2.5	KQ2H04-M5N
						06		10	6		KQ2H06-M5N

Dimensions Per Vacuum Inlet: Barb Fitting

Model							A	Fitting part min. hole size	Fitting part no.
	Vacuum inlet direction	❶ Pad dia.	Form	❷ Material *1	❸ Connection thread	❹ Vacuum inlet			
ZP3	**Y**	**10 13 16**	**B**	**N S U F GN GS**	**B5**	**U2**	6.5	ø0.9	M-5AU-2
						U4	8.5	ø1.8	M-5AU-4
						U6	10.5	ø2.5	M-5AU-6

*1 N: NBR, S: Silicone rubber, U: Urethane rubber, F: FKM, GN: Conductive NBR, GS: Conductive silicone rubber
*2 Indicates the minimum hole size of the adapter or vacuum pad

Vacuum inlet: One-touch fitting

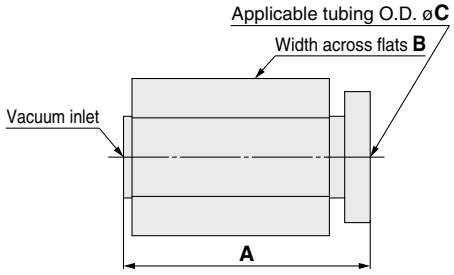

Vacuum inlet: Barb fitting

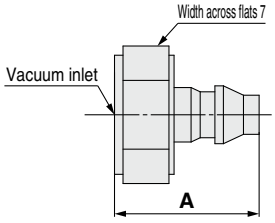

Construction	p. 160
Adapter Assembly	p. 162

Dimensions/Models

With buffer ø10 to ø16

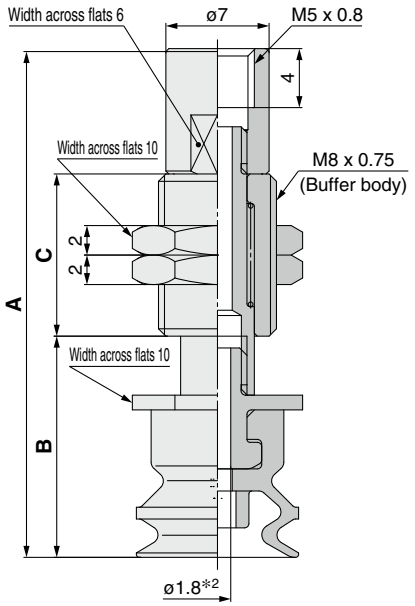

ZP3 – T 10 B N J 3 – B5
❶ ❷ ❸ ❹ ❺

❸ Buffer specification

J	Rotating
JB	Rotating, With bushing
K	Non-rotating

❺ Vacuum inlet

B5	M5 x 0.8	Female thread
02	ø2	One-touch fitting
04	ø4	
06	ø6	
U2	For ø2 polyurethane tubing	Barb fitting
U4	For ø4 soft tubing	
U6	For ø6 soft tubing	

Model								A	B	C
	❶ Vacuum inlet direction	❶ Pad dia.	Form	❷ *1 Material	❸ Buffer spec.	❹ Buffer stroke	❺ Vacuum inlet			
ZP3	T	10 13 16	B	N S U F GN GS	J K	3	B5	34.5	15	11
						6		41	18	14.5
						10		51	22	20.5
					JB K	15		59	40.5	10
						20		66.5	48	

Dimensions Per Vacuum Inlet: One-touch Fitting

Model								D	E	F	Fitting part min. hole size	Fitting part no.
	❶ Vacuum inlet direction	❶ Pad dia.	Form	❷ *1 Material	❸ Buffer spec.	❹ Buffer stroke	❺ Vacuum inlet					
ZP3	T	10 13 16	B	N S U F GN GS	J JB K	3 6 10 15 20	02	10.8	7	2	ø1.4	KQ2H02-M5N
							04	14.7	8	4	ø2.5	KQ2H04-M5N
							06		10	6		KQ2H06-M5N

Dimensions Per Vacuum Inlet: Barb Fitting

Model								D	Fitting part min. hole size	Fitting part no.
	❶ Vacuum inlet direction	❶ Pad dia.	Form	❷ *1 Material	❸ Buffer spec.	❹ Buffer stroke	❺ Vacuum inlet			
ZP3	T	10 13 16	B	N S U F GN GS	J JB K	3 6 10 15 20	U2	6.5	ø0.9	M-5AU-2
							U4	8.5	ø1.8	M-5AU-4
							U6	10.5	ø2.5	M-5AU-6

*1 N: NBR, S: Silicone rubber, U: Urethane rubber, F: FKM, GN: Conductive NBR, GS: Conductive silicone rubber

*2 Indicates the minimum hole size of the adapter or vacuum pad

Vacuum inlet: One-touch fitting

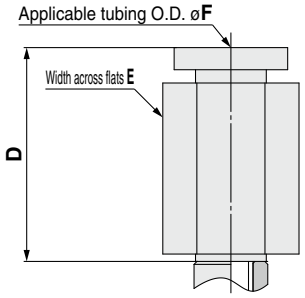

Vacuum inlet: Barb fitting

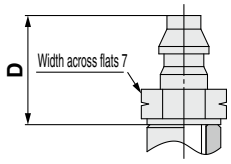

Construction	p. 161
Buffer Assembly	p. 164

Dimensions/Models

With buffer ø10 to ø16

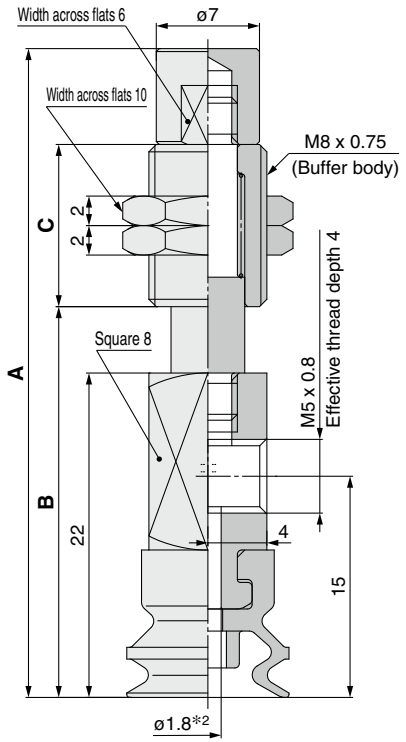

ZP3 – Y ❶10 B ❷N ❸J ❹3 – ❺B5

❸ Buffer specification

J	Rotating
JB	Rotating, With bushing
K	Non-rotating

❺ Vacuum inlet

B5	M5 x 0.8	Female thread
02	ø2	One-touch fitting
04	ø4	
06	ø6	
U2	For ø2 polyurethane tubing	Barb fitting
U4	For ø4 soft tubing	
U6	For ø6 soft tubing	

Model								A	B	C
	❶ Vacuum inlet direction	❶ Pad dia.	Form	❷ *1 Material	❸ Buffer spec.	❹ Buffer stroke	❺ Vacuum inlet			
ZP3	Y	10 13 16	B	N S U F GN GS	J K	3	B5	44	26.5	11
						6		50	29	14.5
						10		60	33	20.5
					JB K	15		63	46.5	10
						20		70.5	54	

Dimensions Per Vacuum Inlet: One-touch Fitting

Model								D	E	F	Fitting part min. hole size	Fitting part no.
	❶ Vacuum inlet direction	❶ Pad dia.	Form	❷ *1 Material	❸ Buffer spec.	❹ Buffer stroke	❺ Vacuum inlet					
ZP3	Y	10 13 16	B	N S U F GN GS	J JB K	3 6 10 15 20	02	10.8	7	2	ø1.4	KQ2H02-M5N
							04	14.7	8	4	ø2.5	KQ2H04-M5N
							06		10	6		KQ2H06-M5N

Dimensions Per Vacuum Inlet: Barb Fitting

Model								D	Fitting part min. hole size	Fitting part no.
	❶ Vacuum inlet direction	❶ Pad dia.	Form	❷ *1 Material	❸ Buffer spec.	❹ Buffer stroke	❺ Vacuum inlet			
ZP3	Y	10 13 16	B	N S U F GN GS	J JB K	3 6 10 15 20	U2	6.5	ø0.9	M-5AU-2
							U4	8.5	ø1.8	M-5AU-4
							U6	10.5	ø2.5	M-5AU-6

*1 N: NBR, S: Silicone rubber, U: Urethane rubber, F: FKM, GN: Conductive NBR, GS: Conductive silicone rubber

*2 Indicates the minimum hole size of the adapter or vacuum pad

Vacuum inlet: One-touch fitting

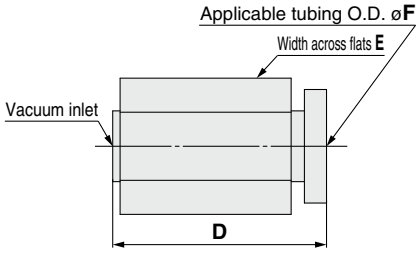

Vacuum inlet: Barb fitting

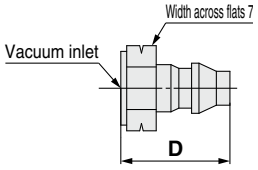

Construction	p. 161
Buffer Assembly	p. 164

Compact Type *ZP3 Series*
Construction

With adapter | Flat type: ø1.5 to ø3.5 | Flat type with groove: ø4 to ø16 | Bellows type: ø4 to ø8 | Bellows type with ribs: ø10 to ø16

Vacuum inlet direction **Vertical** T Type/ZP3-T

ZP3-T□-A□

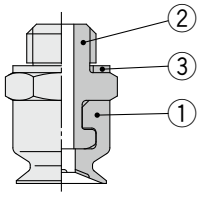

ZP3-T□-B□

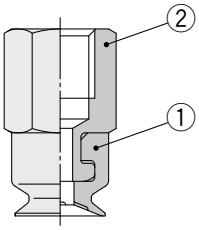

ZP3-T□-A□-B□

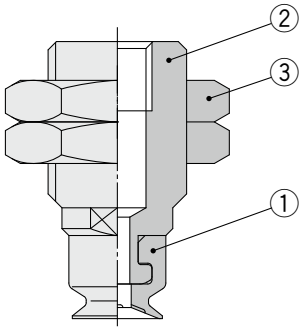

ZP3-T□-A□-(02/04/06)

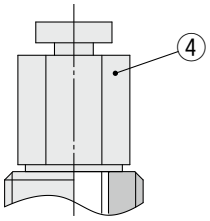

ZP3-T□-A□-(U2/U4/U6)

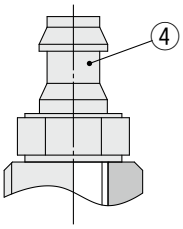

Component Parts

No.	Description	Material	Note
1	**Pad**	NBR, Silicone rubber, Urethane rubber, FKM, Conductive NBR, Conductive silicone rubber	Flat type Flat type with groove Bellows type Bellows type with ribs
2	**Adapter**	Brass (Electroless nickel plating)	
3	**Gasket**	Stainless steel/NBR	

Component Parts

No.	Description	Material	Note
1	**Pad**	NBR, Silicone rubber, Urethane rubber, FKM, Conductive NBR, Conductive silicone rubber	Flat type Flat type with groove Bellows type Bellows type with ribs
2	**Adapter**	Brass (Electroless nickel plating)	
3	**Nut**	Structural steel (Trivalent chromated)	M6 x 0.75 M12 x 1
		Brass (Nickel plating)	M10 x 1
4	**Fitting**	—	

Vacuum inlet direction **Lateral** Y Type/ZP3-Y

ZP3-Y□-B□-B□

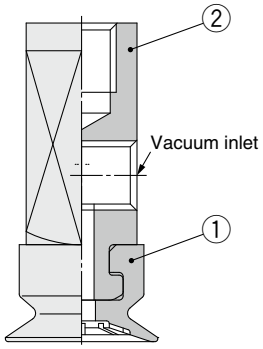

ZP3-Y□-B□-(02/04/06)

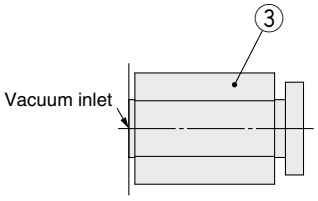

ZP3-Y□-B□-(U2/U4/U6)

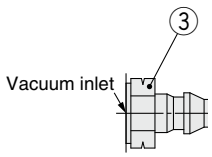

Component Parts

No.	Description	Material	Note
1	**Pad**	NBR, Silicone rubber, Urethane rubber, FKM, Conductive NBR, Conductive silicone rubber	Flat type Flat type with groove Bellows type Bellows type with ribs
2	**Adapter**	Brass (Electroless nickel plating)	
3	**Fitting**	—	

With buffer | Flat type: ø1.5 to ø3.5 | Flat type with groove: ø4 to ø16 | Bellows type: ø4 to ø8 | Bellows type with ribs: ø10 to ø16

Vacuum inlet direction Vertical T Type/ZP3-T

ZP3-T□(J/K)□-B□

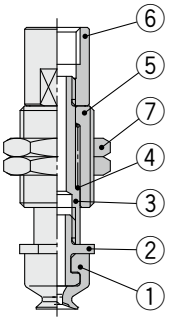

ZP3-T□JB□-B□

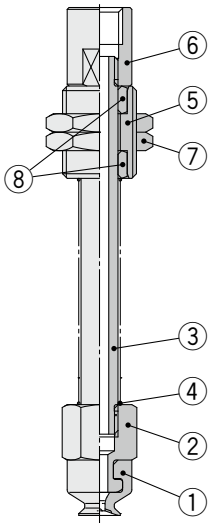

ZP3-T□K(15/20)□-B□

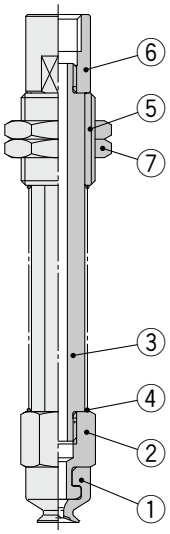

ZP3-T□-(02/04/06)

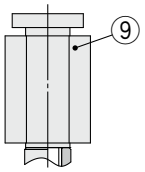

ZP3-T□-(U2/U4/U6)

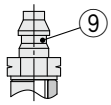

Component Parts

No.	Description	Material	Note
1	**Pad**	NBR, Silicone rubber, Urethane rubber, FKM, Conductive NBR, Conductive silicone rubber	Flat type Flat type with groove Bellows type Bellows type with ribs
2	**Adapter**	Brass (Electroless nickel plating)	
3	**Piston rod**	Stainless steel	
4	**Return spring**	Stainless steel	
5	**Buffer body**	Brass (Electroless nickel plating)	
6	**Buffer adapter**	Brass (Electroless nickel plating)	
7	**Nut**	Structural steel (Trivalent chromated)	M6 x 0.75 M8 x 0.75
8	**Bushing**	—	
9	**Fitting**	—	

Vacuum inlet direction Lateral Y Type/ZP3-Y

ZP3-Y□(J/K)□-B□

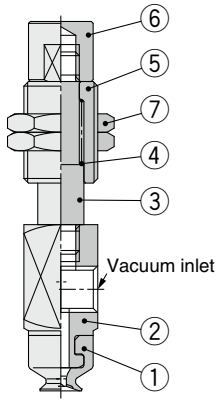

ZP3-Y□JP□-B□

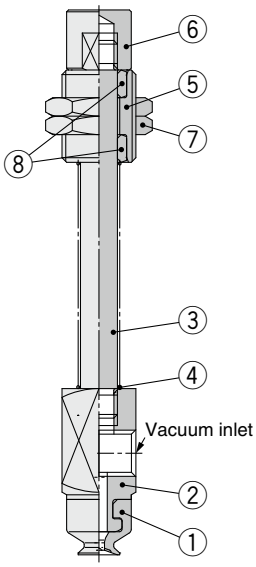

ZP3-Y□K(15/20)□-B□

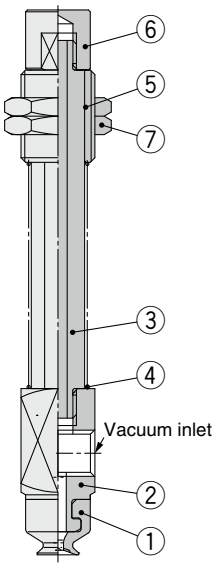

ZP3-Y□-(02/04/06)

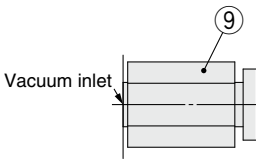

ZP3-Y□-(U2/U4/U6)

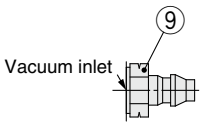

Component Parts

No.	Description	Material	Note
1	**Pad**	NBR, Silicone rubber, Urethane rubber, FKM, Conductive NBR, Conductive silicone rubber	Flat type Flat type with groove Bellows type Bellows type with ribs
2	**Adapter**	Brass (Electroless nickel plating)	
3	**Piston rod**	Stainless steel	
4	**Return spring**	Stainless steel	
5	**Buffer body**	Brass (Electroless nickel plating)	
6	**Buffer adapter**	Brass (Electroless nickel plating)	
7	**Nut**	Structural steel (Trivalent chromated)	M6 x 0.75 M8 x 0.75
8	**Bushing**	—	
9	**Fitting**	—	

Mounting Bracket Assembly

Adapter Assembly: Vacuum Inlet Direction **Vertical** T Type/ZP3-T

Product part no.

ZP3 - T ① ② □ - ③

- ① Pad diameter
- ② Pad form
- □ Pad material
- ③ Connection thread (Male/Female thread)

Component parts



		Symbol	① Pad diameter symbol								
			015	02	035	04	06	08	10	13	16
② Pad form	Flat type	U	●	●	●	—	—	—	—	—	—
	Flat type with groove	UM	—	—	—	●	●	●	●	●	●
	Bellows type	B	—	—	—	●	●	●	●	●	●
Ⓐ Adapter ③ Connection thread: Male thread	M3 x 0.5	A3	ZP3A-T1-A3			—			—		
	M5 x 0.8	A5	—			ZP3A-T2-A5			ZP3A-T3-A5		
Ⓐ Adapter ③ Connection thread: Female thread	M3 x 0.5	B3	ZP3A-T1-B3			—			—		
	M5 x 0.8	B5	—			ZP3A-T2-B5			ZP3A-T3-B5		
Ⓑ Gasket (Single unit)			M-3G2			M-5G2			M-5G2		

Adapter Assembly: Vacuum Inlet Direction **Lateral** Y Type/ZP3-Y

Product part no.

ZP3 - Y ① ② □ - ③ - ④

- ① Pad diameter
- ② Pad form
- □ Pad material
- ③ Connection thread (Female thread)
- ④ Vacuum inlet (Female thread)

Component parts

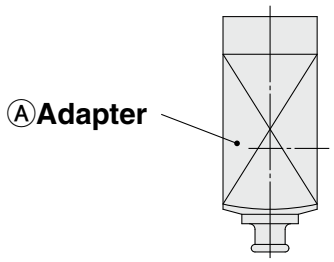

The One-touch fitting and barb fitting should be ordered separately. Refer to the dimensions for part numbers.

						Symbol	① Pad diameter symbol								
							015	02	035	04	06	08	10	13	16
② Pad form						Flat type	U	●	●	●	—	—	—	—	—	—
						Flat type with groove	UM	—	—	—	●	●	●	●	●	●
						Bellows type	B	—	—	—	●	●	●	●	●	●
Ⓐ Adapter	③ Connection thread: Female thread	M3 x 0.5	B3	④ Vacuum inlet: Female thread	M3 x 0.5	B3	ZP3A-Y1-B3			—			—		
		M5 x 0.8	B5		M5 x 0.8	B5	—			ZP3A-Y2-B5			ZP3A-Y3-B5		

Adapter Assembly: Vacuum Inlet Direction **Vertical** T Type/ZP3-T

Product part no.

ZP3 - T ① ② □ - ③ - ④

- ① Pad diameter
- ② Pad form
- □ Pad material
- ③ Connection thread
- ④ Vacuum inlet

Component parts

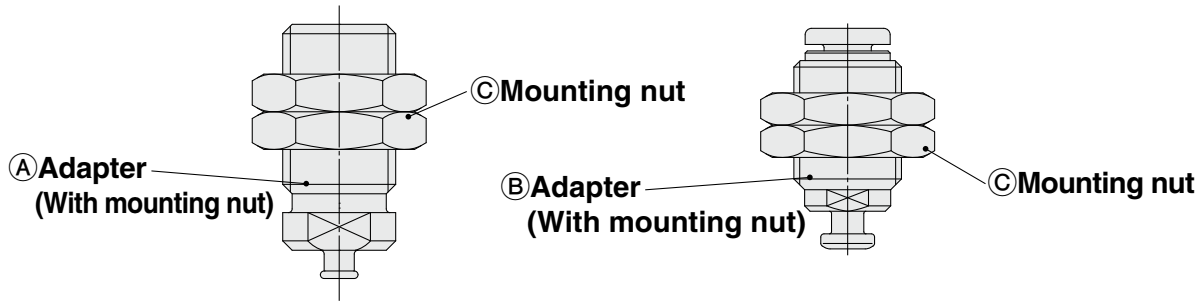

The One-touch fitting and barb fitting for Ⓐ adapter should be ordered separately.
Refer to the dimensions for part numbers.

② Pad form		Symbol	① Pad diameter symbol								
			015	02	035	04	06	08	10	13	16
Flat type		U	●	●	●	—	—	—	—	—	—
Flat type with groove		UM	—	—	—	●	●	●	●	●	●
Bellows type		B	—	—	—	●	●	●	●	●	●
Ⓐ Adapter ③ Connection thread: Male thread	M6 x 0.75 A6	B3	ZP3A-T1-A6-B3			—			—		
	M10 x 1 A10	B5	—			ZP3A-T2-A10-B5			—		
	M12 x 1 A12	B5	—			—			ZP3A-T3-A12-B5		
Ⓑ Adapter ③ Connection thread: Male thread	M10 x 1 A10	ø4	04	—			ZP3A-T2-A10-04			—	
	M12 x 1 A12	ø4	04	—			—			ZP3A-T3-A12-04	
		ø6	06	—			—			ZP3A-T3-A12-06	
Ⓒ Mounting nut (Single unit)		M6 x 0.75	ZPNA-M6A			—			—		
		M10 x 1	—			ZPNA-M10					
		M12 x 1	—			—			ZPNA-M12A		

Buffer Assembly: Vacuum Inlet Direction **Vertical** T Type/ZP3-T, Lateral Y Type/ZP3-Y

Product part no.

ZP3 - (T/Y) ① ② □ - (J/JB/K) - ③ - ④

- T: Vertical vacuum inlet
- Y: Lateral vacuum inlet
- ① Pad diameter
- ② Pad form
- □ Pad material
- (J/JB/K) J: Rotating, JB: Rotating, With bushing, K: Non-rotating
- ③ Buffer stroke
- ④ Vacuum inlet (Female thread)

Component parts

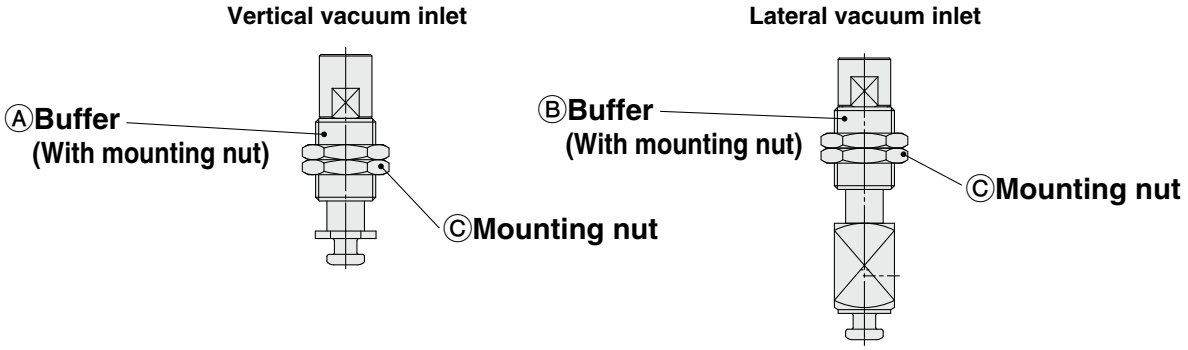

The One-touch fitting and barb fitting should be ordered separately. Refer to the dimensions for part numbers.

							① Pad diameter symbol								
						Symbol	015	02	035	04	06	08	10	13	16
② Pad form					Flat type	U	●	●	●	—	—	—	—	—	—
					Flat type with groove	UM	—	—	—	●	●	●	●	●	●
					Bellows type	B	—	—	—	●	●	●	●	●	●
Vertical	Ⓐ Buffer	④ Vacuum inlet	Female thread	M3 x 0.5	B3	③ Buffer stroke	3	ZP3B-T1(J/K)3-B3			—			—	
							6	ZP3B-T1(J/K)6-B3			—			—	
				M5 x 0.8	B5		3	—			ZP3B-T2A(J/K)3-B5			ZP3B-T2B(J/K)3-B5	
							6	—			ZP3B-T2A(J/K)6-B5			ZP3B-T2B(J/K)6-B5	
							10	—			ZP3B-T2A(J/K)10-B5			ZP3B-T2B(J/K)10-B5	
							15	—			ZP3B-T2A(JB/K)15-B5			ZP3B-T2B(JB/K)15-B5	
							20	—			ZP3B-T2A(JB/K)20-B5			ZP3B-T2B(JB/K)20-B5	
Lateral	Ⓑ Buffer	④ Vacuum inlet	Female thread	M3 x 0.5	B3	③ Buffer stroke	3	ZP3B-Y1(J/K)3-B3			—			—	
							6	ZP3B-Y1(J/K)6-B3			—			—	
				M5 x 0.8	B5		3	—			ZP3B-Y2A(J/K)3-B5			ZP3B-Y2B(J/K)3-B5	
							6	—			ZP3B-Y2A(J/K)6-B5			ZP3B-Y2B(J/K)6-B5	
							10	—			ZP3B-Y2A(J/K)10-B5			ZP3B-Y2B(J/K)10-B5	
							15	—			ZP3B-Y2A(JB/K)15-B5			ZP3B-Y2B(JB/K)15-B5	
							20	—			ZP3B-Y2A(JB/K)20-B5			ZP3B-Y2B(JB/K)20-B5	
Ⓒ Mounting nut (Single unit)					M6 x 0.75		ZPNA-M6A			—			—		
					M8 x 0.75		—			ZPNA-M8A			ZPNA-M8A		

[Buffer part number example]

Product part no. **ZP3 – T 08UMN J 10 – 04**

Buffer **ZP3B – T 2A J 10 – B5**

③ Buffer stroke

One-touch fitting **KQ2H04-M5N**

Basic/Compact Type Specific Product Precautions

Be sure to read this before handling the products. Refer to page 375 for safety instructions. For vacuum equipment and vacuum pad precautions, refer to pages 376 to 379.

Mounting

1. Tighten the screw within the specified torque range when mounting the buffer.

Tightening with a torque outside of the specified range may cause malfunction.

Basic Type ZP Series

Model	Connection thread	Tightening torque [N·m]
ZP□(2 to 8)□(J/K)□-□-A8	M8 x 1	1.5 to 2.0
ZP□(10 to 32)□(J/K)□-□-A10	M10 x 1	2.5 to 3.5
ZP□(40/50)□(J/K)□-□-A12	M14 x 1	6.5 to 7.5

Compact Type ZP3 Series

Model	Connection thread	Tightening torque [N·m]
ZP3-□(015 to 035)□J□-□	M6 x 0.75	1.5 to 1.8
ZP3-□(015 to 035)□K□-□	M8 x 0.75	2.0 to 2.5
ZP3-□(04 to 16)□(J/JB/K)□-□		

How to Replace the Pad

1. How to replace the pad of the basic type ZP series

1 Pull the lock ring upward, and, after lifting it up to the adapter, remove the old pad by pulling it downward.

2 While holding the lock ring in the raised position, place a new pad onto the adapter.

3 Confirm that the pad is securely in place, and then return the lock ring to its original position.

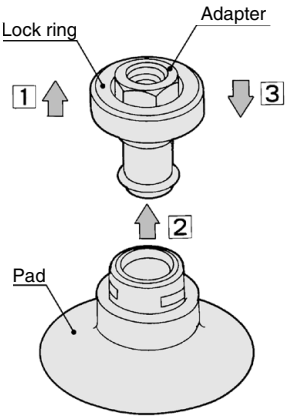

2. How to replace the pad of the basic (ball joint) type ZP series

Pad diameter: ø10 to ø32

1 Insert a hexagon wrench into the bottom of the pad, loosen the screw, and remove the old pad from the adapter.

2 Place a new pad on the adapter, and, after confirming that the O-ring is in place, retighten the screw with the hexagon wrench.

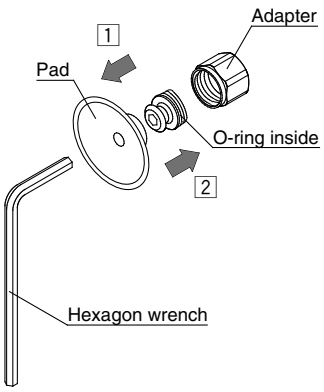

Pad diameter: ø40, ø50

1 Pull the lock ring upward, and, after lifting it up to the adapter, remove the old pad by pulling it downward.

2 While holding the lock ring in the raised position, place a new pad onto the adapter.

3 Confirm that the pad is securely in place, and then return the lock ring to its original position.

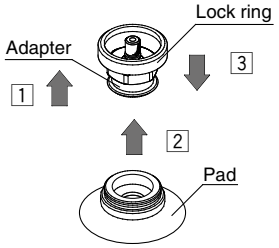

Oval Pad *ZP/ZP2 Series* RoHS

2 x 4, 3.5 x 7, 4 x 10, 4 x 20, 4 x 30, 5 x 10, 5 x 20, 5 x 30, 6 x 10, 6 x 20, 6 x 30, 8 x 20, 8 x 30

Oval Flat Type

For rectangular, vertically long, and horizontally long workpieces

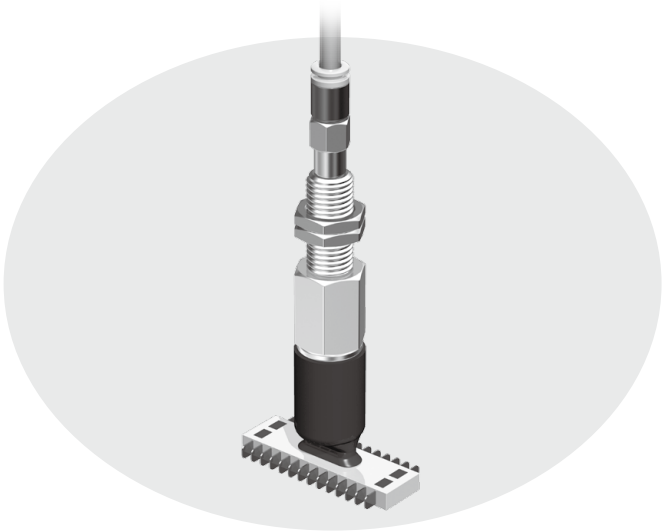

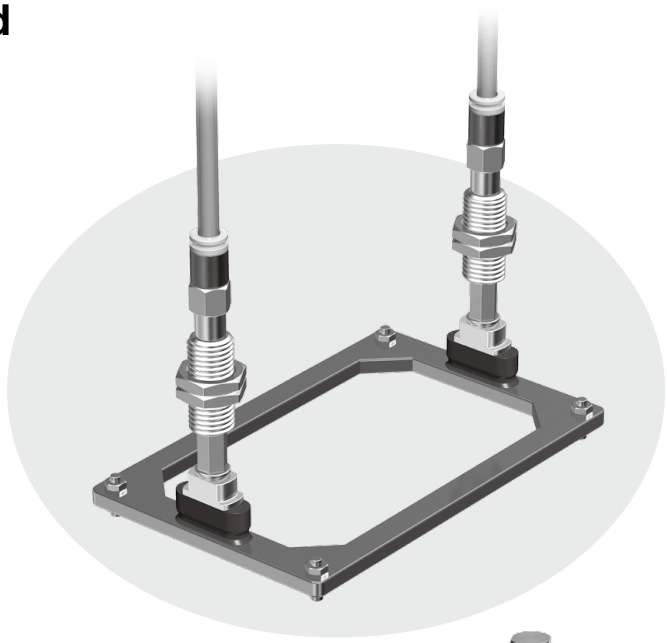



ZP Series



ZP2 Series

CONTENTS

Oval Pad *ZP/ZP2 Series*

Variations ..... p. 167
Specifications ..... p. 168

Oval Flat Type/ZP Series
- How to Order ..... p. 170
- Dimensions/Models ..... p. 171

Oval Flat Type/ZP2 Series
- How to Order ..... p. 179
- Dimensions/Models ..... p. 180

Construction
ZP Series ..... p. 185
ZP2 Series ..... p. 187

Mounting Bracket Assembly
ZP Series ..... p. 189
ZP2 Series ..... p. 195

Specific Product Precautions ..... p. 198

ZP Series

Vacuum inlet direction		Vacuum inlet direction	Oval flat type
	Single unit		p. 171
Vertical	ZPT With adapter		p. 171
Lateral	ZPR With adapter	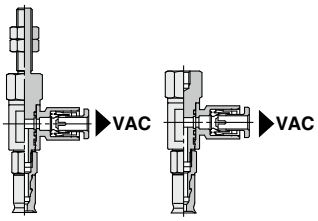	p. 172 p. 173
Lateral	ZPY With adapter	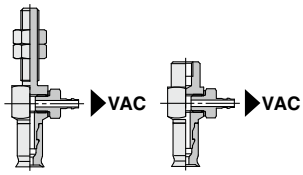	p. 174 p. 175
Vertical	ZPT With buffer	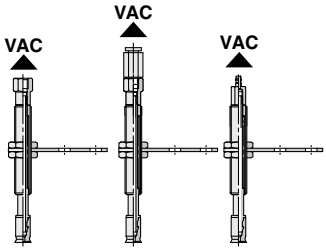	p. 176
Lateral	ZPR With buffer	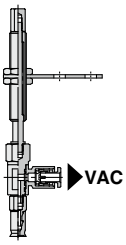	p. 177
Lateral	ZPY With buffer	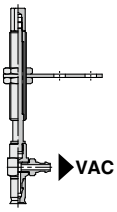	p. 178

ZP2 Series

Vacuum inlet direction		Vacuum inlet direction	Oval flat type
	Single unit		p. 180
Vertical	ZP2-T With adapter	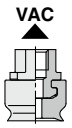	p. 180
Lateral	ZP2-R With adapter	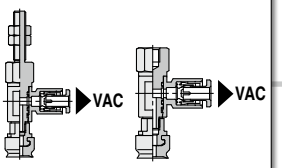	p. 181 p. 182
Vertical	ZP2-T With buffer	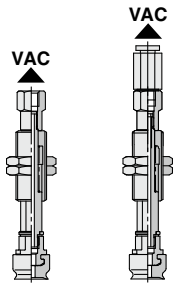	p. 183
Lateral	ZP2-R With buffer	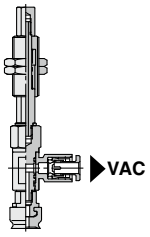	p. 184

Oval Pad *ZP/ZP2 Series*
Specifications

Pad Material: ZP/ZP2 Series

Material	NBR (Nitrile rubber)	Silicone rubber*1	Urethane rubber	FKM (Fluoro rubber)	Conductive NBR (Nitrile rubber)	Conductive silicone rubber
Color of rubber	Black	White	Brown	Black		
Rubber hardness HS (±5°)	A50/S	A40/S	A60/S		A50/S	
Identification (Dot)	—	—	—	· 1 green dot	· 1 silver dot	· 2 silver dots

*1 Compliant with the FDA (USA Food and Drug Administration) regulation 21CFR§177.2600 for "Rubber articles intended for repeated use"

Adapter Specifications: ZP Series

Vertical



Vacuum Inlet Direction Vertical T Type/ZPT

Connection	Male thread	Female thread
Pad size	2004, 3507, 4010	2004, 3507, 4010
Connection thread	M5 x 0.8 M6 x 1	M4 x 0.7 M5 x 0.8
Vacuum inlet	Use the connection thread.	

Lateral

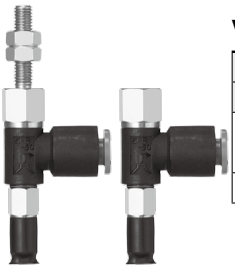

Vacuum Inlet Direction Lateral R Type/ZPR

Connection		Male thread	Female thread
Pad size		2004, 3507, 4010	2004, 3507, 4010
Connection thread		M5 x 0.8 M6 x 1	M4 x 0.7 M5 x 0.8
Vacuum inlet	One-touch fitting	ø4, ø6	ø4, ø6

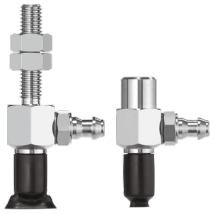

Vacuum Inlet Direction Lateral Y Type/ZPY

Connection		Male thread	Female thread
Pad size		2004, 3507, 4010	2004, 3507, 4010
Connection thread		M5 x 0.8 M6 x 1	M4 x 0.7 M5 x 0.8
Vacuum inlet	Barb fitting (Nylon tubing)	ø4, ø6	ø4, ø6
	Barb fitting (Soft tubing)		

Buffer Specifications: ZP Series

Vertical
Lateral

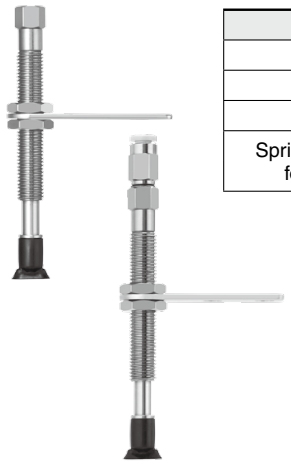

Pad size		2004, 3507, 4010
Non-rotating specification		J: Rotating, K: Non-rotating
Stroke [mm]		6, 10, 15, 25
Connection thread		M8 x 1
Spring reactive force [N]	At 0 stroke	0.8
	At full stroke	1.2

Adapter Specifications: ZP2 Series

Vertical



Vacuum Inlet Direction Vertical T Type/ZP2-T

Connection	Female thread
Pad size	**3507 to 8030**
Connection thread	M5 x 0.8
Vacuum inlet	Use the connection thread.

Lateral



Vacuum Inlet Direction Lateral R Type/ZP2-R

Connection		Male thread	Female thread
Pad size		**3507 to 8030**	**3507 to 8030**
Connection thread		M5 x 0.8	M5 x 0.8
Vacuum inlet	One-touch fitting	ø4, ø6	ø4, ø6

Buffer Specifications: ZP2 Series

Vertical
Lateral

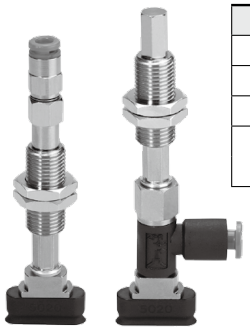

Pad diameter		3507 to 8030
Non-rotating specification		K: Non-rotating
Stroke [mm]		10, 20, 30, 40, 50
Connection thread		M10 x 1
Spring reactive force [N]	At 0 stroke	1.0
	At full stroke	3.0



Oval Pad

Oval Flat Type

ZP Series



How to Order

	Dimensions/ Models	Construction	Mounting Bracket Assembly
Pad unit ZP 20 04 U N	p. 171	p. 185	From p. 189
With adapter ZP T 20 04 U N – A5 –	From p. 171	p. 185	From p. 189
With buffer ZP T 20 04 U N J 6 – B3 – A8	From p. 176	p. 186	From p. 192

∗ Pad unit's sales unit: 10 pcs.

❶ ❷ ❸ ❹ ❺ ❻ ❼ ❽

● Oval flat type

❶ Vacuum inlet direction

Nil	Pad unit
T	Vertical
R	Lateral (With One-touch fitting)
Y	Lateral (With barb fitting)

❷/❸ Pad size

❷ Breadth	❸ Length 04	07	10
20	● (2 x 4)	—	—
35	—	● (3.5 x 7)	—
40	—	—	● (4 x 10)

❹ Material

N	NBR
S	Silicone rubber∗1
U	Urethane rubber
F	FKM
GN	Conductive NBR
GS	Conductive silicone rubber

∗1 Compliant with the FDA (USA Food and Drug Administration) regulation 21CFR§177.2600 for "Rubber articles intended for repeated use"

❺ Buffer specification

J	Rotating
K	Non-rotating

❻ Buffer stroke

Stroke [mm]	Pad size All sizes
6	●
10	●
15	●
25	●

With adapter

❼ Vacuum inlet

○: ZPT/Vertical ●: ZPR/Lateral (With One-touch fitting) △: ZPY/Lateral (With barb fitting)

Type	Symbol	Size	Pad diameter All sizes
Male thread	A5	M5 x 0.8	○
	A6	M6 x 1	○
Female thread	B4	M4 x 0.7	○
	B5	M5 x 0.8	○
One-touch fitting	04	ø4	●
	06	ø6	●
Barb fitting	N4	For ø4 nylon tubing	△
	N6	For ø6 nylon tubing	△
	U4	For ø4 soft tubing	△
	U6	For ø6 soft tubing	△

❽ Connection thread

●: ZPR/Lateral (With One-touch fitting) △: ZPY/Lateral (With barb fitting)

Type	Symbol	Size	Pad diameter All sizes
Male thread	A5	M5 x 0.8	●△
	A6	M6 x 1	●△
Female thread	B4	M4 x 0.7	●△
	B5	M5 x 0.8	●△

It is not necessary to select a connection thread for ○: ZPT/Vertical. Use the vacuum inlet.

With buffer

❼ Vacuum inlet

○: ZPT/Vertical ●: ZPR/Lateral (With One-touch fitting) △: ZPY/Lateral (With barb fitting)

Type	Symbol	Size	Pad diameter All sizes
Female thread	B3	M3 x 0.5	○
	B5	M5 x 0.8	○
One-touch fitting	04	ø4	○●
	06	ø6	○●
Barb fitting	N4	For ø4 nylon tubing∗1	○△
	N6	For ø6 nylon tubing∗1	△
	U4	For ø4 soft tubing∗2	○△
	U6	For ø6 soft tubing∗2	△

∗1 Nylon tube piping
∗2 Soft nylon/Polyurethane tube piping

❽ Connection thread

○: ZPT/Vertical ●: ZPR/Lateral (With One-touch fitting) △: ZPY/Lateral (With barb fitting)

Type	Symbol	Size	Pad diameter All sizes
Male thread	A8	M8 x 1	○●△

∗ The pad, mounting nut, fitting, and buffer plate are shipped together but do not come assembled.

Dimensions/Models

Single unit 2 x 4 to 4 x 10

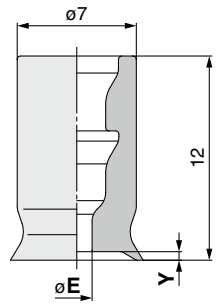

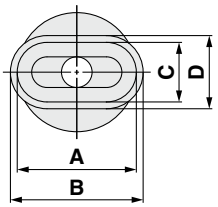

Construction	p. 185
Mounting Bracket Assembly	From p. 189

ZP 2004 U N
❶ ❷

Model				A	B	C	D	E	Y
	❶ Pad size	Form	❷ Material *1						
ZP	2004	U	N S U F GN GS	4	4.6	2	2.6	1.2	0.3
	3507			7	7.8	3.5	4.3	1.8	0.5
	4010			10	11	4	5	2	0.8

*1 N: NBR, S: Silicone rubber, U: Urethane rubber, F: FKM, GN: Conductive NBR, GS: Conductive silicone rubber

With adapter 2 x 4 to 4 x 10

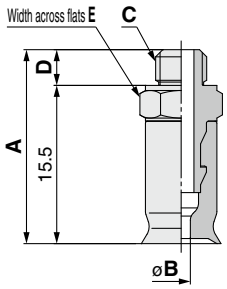

Construction	p. 185
Adapter Assembly	p. 189

ZPT 2004 U N - A5
❶ ❷ ❸

❸ **Vacuum inlet (Male thread)**

A5	M5 x 0.8
A6	M6 x 1

Model						A	B	C	D	E
	Vacuum inlet direction	❶ Pad size	Form	❷ Material *1	❸ Vacuum inlet					
ZP	T	2004	U	N S U F GN GS	A5	19	1.2	M5 x 0.8	3.5	7
		3507					1.8			
		4010					2			
		2004			A6	20	1.2	M6 x 1	4.5	8
		3507					1.8			
		4010					2			

*1 N: NBR, S: Silicone rubber, U: Urethane rubber, F: FKM, GN: Conductive NBR, GS: Conductive silicone rubber

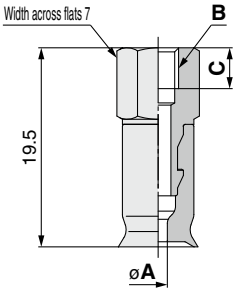

Construction	p. 185
Adapter Assembly	p. 189

ZPT 2004 U N - B4
❶ ❷ ❸

❸ **Vacuum inlet (Female thread)**

B4	M4 x 0.7
B5	M5 x 0.8

Model						A	B	C
	Vacuum inlet direction	❶ Pad size	Form	❷ Material *1	❸ Vacuum inlet			
ZP	T	2004	U	N S U F GN GS	B4	1.2	M4 x 0.7	4
		3507				1.8		
		4010				2		
		2004			B5	1.2	M5 x 0.8	5
		3507				1.8		
		4010				2		

*1 N: NBR, S: Silicone rubber, U: Urethane rubber, F: FKM, GN: Conductive NBR, GS: Conductive silicone rubber

Dimensions/Models

With adapter/One-touch fitting 2 x 4 to 4 x 10

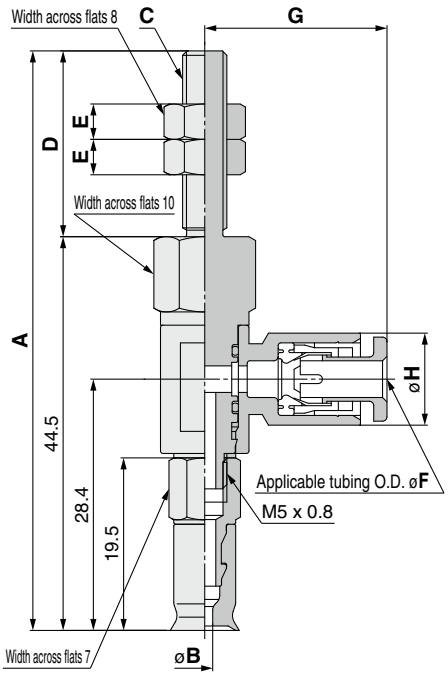

Construction	p. 185
Adapter Assembly	p. 190

ZPR 2004 U N – 04 – A5
❶ ❷ ❸ ❹

❸ **Vacuum inlet (One-touch fitting)**

04	ø4
06	ø6

❹ **Connection thread (Male thread)**

A5	M5 x 0.8
A6	M6 x 1

Model							A	B	C	D	E
	Vacuum inlet direction	❶ Pad size	Form	❷ *1 Material	❸ Vacuum inlet	❹ Connection thread					
ZP	R	2004	U	N S U F GN GS	04 06	A5	65.5	1.2	M5 x 0.8	21	4
		3507						1.8			
		4010						2			
		2004				A6	70.5	1.2	M6 x 1	26	3
		3507						1.8			
		4010						2			

Dimensions Per Vacuum Inlet

Model							F	G	H	Fitting part min. hole size
	Vacuum inlet direction	❶ Pad size	Form	❷ *1 Material	❸ Vacuum inlet	❹ Connection thread				
ZP	R	2004 3507 4010	U	N S U F GN GS	04	A5 A6	4	20.6	10.4	ø3
					06		6	21.6	12.8	ø4

*1 N: NBR, S: Silicone rubber, U: Urethane rubber, F: FKM, GN: Conductive NBR, GS: Conductive silicone rubber

Dimensions/Models

With adapter/One-touch fitting 2 x 4 to 4 x 10

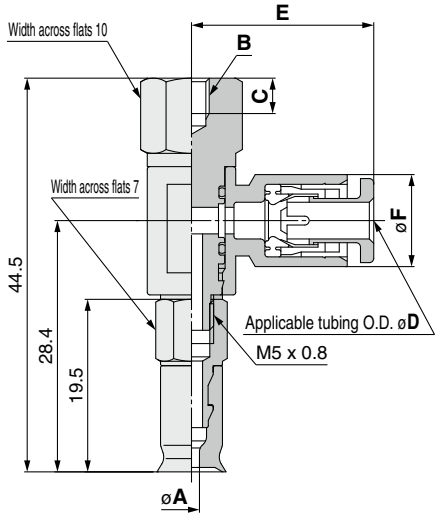

Construction	p. 185
Adapter Assembly	p. 190

ZPR 2004 U N – 04 – B4
❶ ❷ ❸ ❹

❸ Vacuum inlet (One-touch fitting)

04	ø4
06	ø6

❹ Connection thread (Female thread)

B4	M4 x 0.7
B5	M5 x 0.8

Model							A	B	C
	Vacuum inlet direction	❶ Pad size	Form	❷ Material *1	❸ Vacuum inlet	❹ Connection thread			
ZP	R	2004	U	N S U F GN GS	04 06	B4	1.2	M4 x 0.7	4
		3507					1.8		
		4010					2		
		2004				B5	1.2	M5 x 0.8	5
		3507					1.8		
		4010					2		

Dimensions Per Vacuum Inlet

Model							D	E	F	Fitting part min. hole size
	Vacuum inlet direction	❶ Pad size	Form	❷ Material *1	❸ Vacuum inlet	❹ Connection thread				
ZP	R	2004 3507 4010	U	N S U F GN GS	04	B4 B5	4	20.6	10.4	ø3
					06		6	21.6	12.8	ø4

*1 N: NBR, S: Silicone rubber, U: Urethane rubber, F: FKM, GN: Conductive NBR, GS: Conductive silicone rubber

Dimensions/Models

With adapter/barb fitting 2 x 4 to 4 x 10

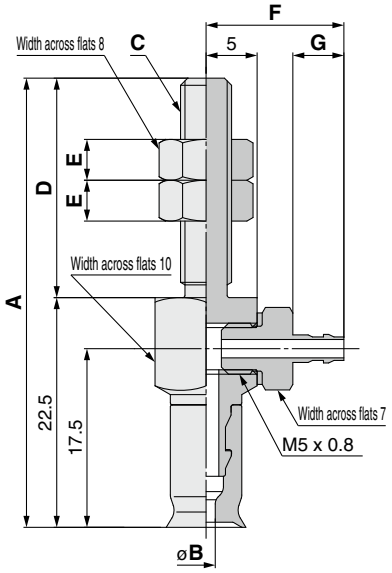

ZPY 2004 U N – N4 – A5
❶ ❷ ❸ ❹

❸ Vacuum inlet (Barb fitting)

N4	For ø4 nylon tubing	M-5AN-4
N6	For ø6 nylon tubing	M-5AN-6
U4	For ø4 soft tubing	M-5AU-4
U6	For ø6 soft tubing	M-5AU-6

❹ Connection thread (Male thread)

A5	M5 x 0.8
A6	M6 x 1

Model							A	B	C	D	E
	Vacuum inlet direction	❶ Pad size	Form	❷ *1 Material	❸ Vacuum inlet	❹ Connection thread					
ZP	**Y**	**2004**	**U**	**N S U F GN GS**	**N4 N6 U4 U6**	**A5**	44	1.2	M5 x 0.8	21.5	4
		3507						1.8			
		4010						2			
		2004				**A6**	49.5	1.2	M6 x 1	27	3
		3507						1.8			
		4010						2			

Dimensions Per Vacuum Inlet

Model							F	G	Fitting part min. hole size
	Vacuum inlet direction	❶ Pad size	Form	❷ *1 Material	❸ Vacuum inlet	❹ Connection thread			
ZP	**Y**	**2004 3507 4010**	**U**	**N S U F GN GS**	**N4 U4**	**A5 A6**	13.5	5	ø1.8
					N6 U6		15.5	7	ø2.5

*1 N: NBR, S: Silicone rubber, U: Urethane rubber, F: FKM, GN: Conductive NBR, GS: Conductive silicone rubber

Construction	p. 185
Adapter Assembly	p. 191

Dimensions/Models

With adapter/barb fitting 2 x 4 to 4 x 10

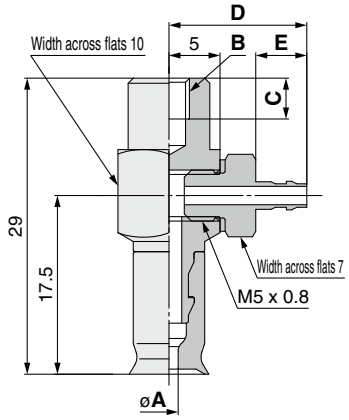

Construction	p. 185
Adapter Assembly	p. 191

ZPY 2004 U N – N4 – B4
❶ ❷ ❸ ❹

❸ Vacuum inlet (Barb fitting)

N4	For ø4 nylon tubing	M-5AN-4
N6	For ø6 nylon tubing	M-5AN-6
U4	For ø4 soft tubing	M-5AU-4
U6	For ø6 soft tubing	M-5AU-6

❹ Connection thread (Female thread)

B4	M4 x 0.7
B5	M5 x 0.8

Model							A	B	C
	Vacuum inlet direction	❶ Pad size	Form	❷ *1 Material	❸ Vacuum inlet	❹ Connection thread			
ZP	Y	2004	U	N S U F GN GS	N4 N6 U4 U6	B4	1.2	M4 x 0.7	4
		3507					1.8		
		4010					2		
		2004				B5	1.2	M5 x 0.8	5
		3507					1.8		
		4010					2		

Dimensions Per Vacuum Inlet

Model							D	E	Fitting part min. hole size
	Vacuum inlet direction	❶ Pad size	Form	❷ *1 Material	❸ Vacuum inlet	❹ Connection thread			
ZP	Y	2004 3507 4010	U	N S U F GN GS	N4 U4	B4 B5	13.5	5	ø1.8
					N6 U6		15.5	7	ø2.5

*1 N: NBR, S: Silicone rubber, U: Urethane rubber, F: FKM, GN: Conductive NBR, GS: Conductive silicone rubber

Dimensions/Models

With buffer 2 x 4 to 4 x 10

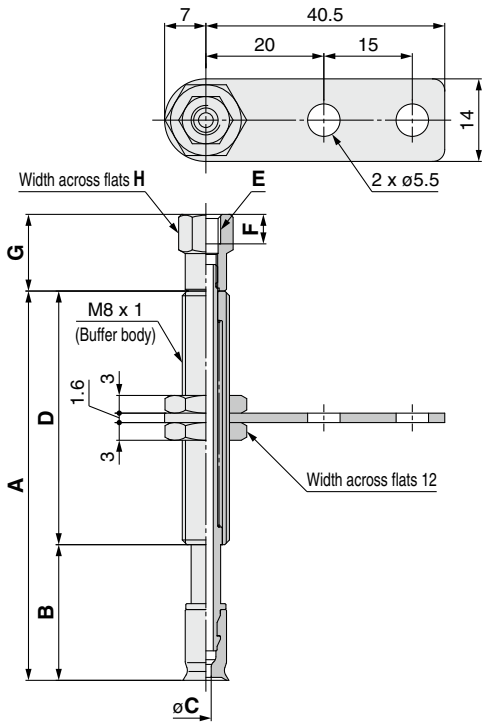

ZPT 2004 U N J 6 - B3 - A8
❶ ❷ ❹ ❺ ❻

❸ Buffer specification

J	Rotating
K	Non-rotating

❻ Connection thread (Male thread)

A8	M8 x 1

❺ Vacuum inlet

B3	M3 x 0.5	Female thread	
B5	M5 x 0.8		
04	ø4	One-touch fitting	KQ2H04-M5N
06	ø6		KQ2H06-M5N
N4	For ø4 nylon tubing	Barb fitting	
U4	For ø4 soft tubing		

Model									A	B	C	D
	Vacuum inlet direction	❶ Pad size	Form	❷ *1 Material	❸ Buffer spec.	❹ Buffer stroke	❺ Vacuum inlet	❻ Connection thread				
ZP	T	2004	U	N S U F GN GS	J K	6	B3 B5 04 06 N4 U4	A8	33	18	1.2	15
						10			66	23		43
						15			71	28		
						25			81	38		
		3507				6			33	18	1.8	15
						10			66	23		43
						15			71	28		
						25			81	38		
		4010				6			33	18	2	15
						10			66	23		43
						15			71	28		
						25			81	38		

Vacuum inlet: One-touch fitting

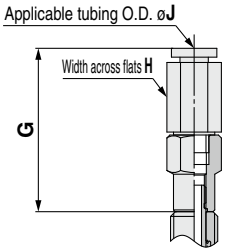

Vacuum inlet: Barb fitting

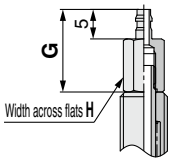

Dimensions Per Vacuum Inlet: Female Thread

Model									E	F	G	H
	Vacuum inlet direction	❶ Pad size	Form	❷ *1 Material	❸ Buffer spec.	❹ Buffer stroke	❺ Vacuum inlet	❻ Connection thread				
ZP	T	2004 3507 4010	U	N S U F GN GS	J K	6 10 15 25	B3	A8	M3 x 0.5	3	11	6
							B5		M5 x 0.8	5	13	8

Dimensions Per Vacuum Inlet: One-touch Fitting

Model									G	H	J	Fitting part min. hole size
	Vacuum inlet direction	❶ Pad size	Form	❷ *1 Material	❸ Buffer spec.	❹ Buffer stroke	❺ Vacuum inlet	❻ Connection thread				
ZP	T	2004 3507 4010	U	N S U F GN GS	J K	6 10 15 25	04	A8	27.7	8	4	ø2.5
							06			10	6	

Dimensions Per Vacuum Inlet: Barb Fitting

Model									G	H	Fitting part min. hole size
	Vacuum inlet direction	❶ Pad size	Form	❷ *1 Material	❸ Buffer spec.	❹ Buffer stroke	❺ Vacuum inlet	❻ Connection thread			
ZP	T	2004 3507 4010	U	N S U F GN GS	J K	6 10 15 25	N4	A8	14	6	ø1.8
							U4				

*1 N: NBR, S: Silicone rubber, U: Urethane rubber, F: FKM, GN: Conductive NBR, GS: Conductive silicone rubber

Construction	p. 186
Buffer Assembly	p. 192

Dimensions/Models

With buffer/One-touch fitting 2 x 4 to 4 x 10

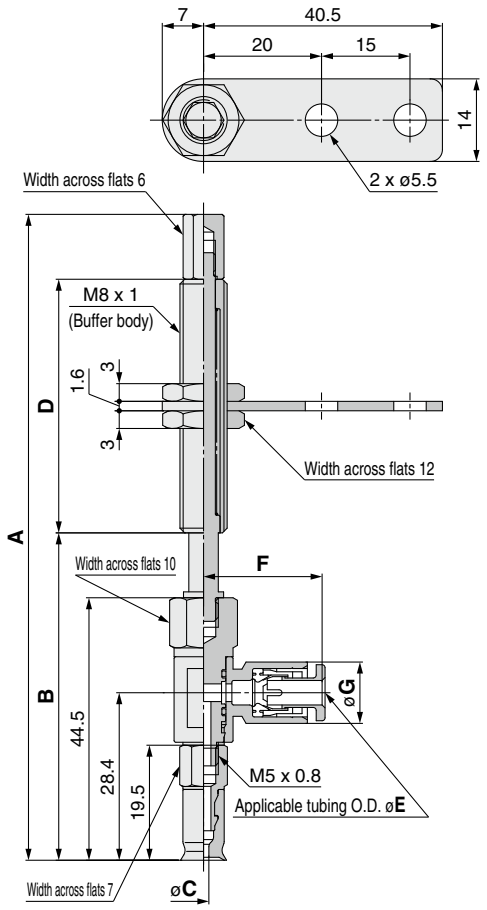

ZPR 2004 U N J 6 - 04 - A8
❶ ❷ ❹ ❺ ❻

❸ Buffer specification

J	Rotating
K	Non-rotating

❻ Connection thread (Male thread)

A8	M8 x 1

❺ Vacuum inlet (One-touch fitting)

04	ø4
06	ø6

Model									A	B	C	D
	Vacuum inlet direction	❶ Pad size	Form	❷ *1 Material	❸ Buffer spec.	❹ Buffer stroke	❺ Vacuum inlet	❻ Connection thread				
ZP	R	2004	U	N S U F GN GS	J K	6	04 06	A8	78.5	52.5	1.2	15
						10			109.5	55.5		43
						15			114.5	60.5		
						25			124.5	70.5		
		3507				6			78.5	52.5	1.8	15
						10			109.5	55.5		43
						15			114.5	60.5		
						25			124.5	70.5		
		4010				6			78.5	52.5	2	15
						10			109.5	55.5		43
						15			114.5	60.5		
						25			124.5	70.5		

Dimensions Per Vacuum Inlet

Model									E	F	G	Fitting part min. hole size
	Vacuum inlet direction	❶ Pad size	Form	❷ *1 Material	❸ Buffer spec.	❹ Buffer stroke	❺ Vacuum inlet	❻ Connection thread				
ZP	R	2004 3507 4010	U	N S U F GN GS	J K	6 10 15 25	04	A8	4	20.6	10.4	ø3
							06		6	21.6	12.8	ø4

*1 N: NBR, S: Silicone rubber, U: Urethane rubber, F: FKM, GN: Conductive NBR, GS: Conductive silicone rubber

Construction	p. 186
Buffer Assembly	p. 193

Dimensions/Models

With buffer/barb fitting 2 x 4 to 4 x 10

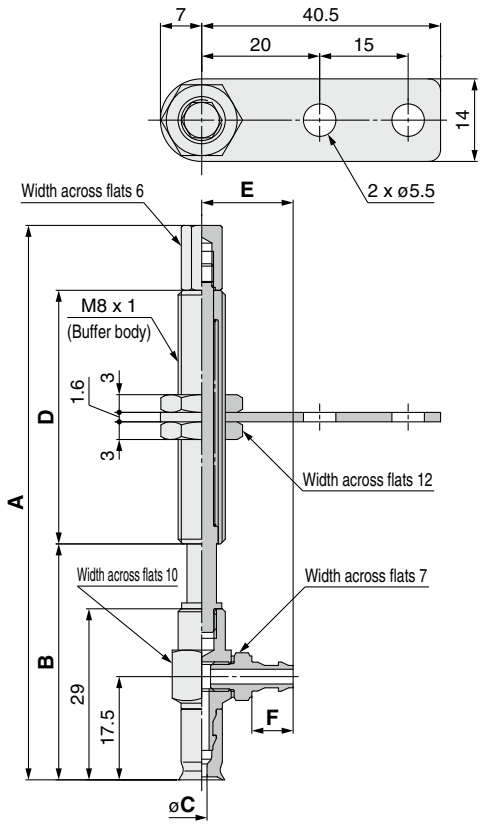

ZPY 2004 U N J 6 - N4 - A8
❶ ❷ ❹ ❺ ❻

❸ Buffer specification

J	Rotating
K	Non-rotating

❻ Connection thread (Male thread)

A8	M8 x 1

❺ Vacuum inlet (Barb fitting)

N4	For ø4 nylon tubing	M-5AN-4
N6	For ø6 nylon tubing	M-5AN-6
U4	For ø4 soft tubing	M-5AU-4
U6	For ø6 soft tubing	M-5AU-6

Model									A	B	C	D
	Vacuum inlet direction	❶ Pad size	Form	❷ *1 Material	❸ Buffer spec.	❹ Buffer stroke	❺ Vacuum inlet	❻ Connection thread				
ZP	Y	2004	U	N S U F GN GS	J K	6	N4 N6 U4 U6	A8	63	37	1.2	15
						10			94	40		43
						15			99	45		
						25			109	55		
		3507				6			63	37	1.8	15
						10			94	40		43
						15			99	45		
						25			109	55		
		4010				6			63	37	2	15
						10			94	40		43
						15			99	45		
						25			109	55		

Dimensions Per Vacuum Inlet

Model									E	F	Fitting part min. hole size
	Vacuum inlet direction	❶ Pad size	Form	❷ *1 Material	❸ Buffer spec.	❹ Buffer stroke	❺ Vacuum inlet	❻ Connection thread			
ZP	Y	2004 3507 4010	U	N S U F GN GS	J K	6 10 15 25	N4 U4	A8	13.5	5	ø1.8
							N6 U6		15.5	7	ø2.5

*1 N: NBR, S: Silicone rubber, U: Urethane rubber, F: FKM, GN: Conductive NBR, GS: Conductive silicone rubber

Construction	p. 186
Buffer Assembly	p. 194

Oval Pad

Oval Flat Type

ZP2 Series



How to Order

		Dimensions/ Models	Construction	Mounting Bracket Assembly
Pad unit	ZP2 – 35 07 W N	p. 180	p. 187	From p. 195
With adapter	ZP2 – T 35 07 W N – B5 – ☐	From p. 180	p. 187	p. 195
With buffer	ZP2 – T 35 07 W N K 10 – B5	From p. 183	p. 188	From p. 196

∗ Pad unit's sales unit: 10 pcs.

❶ ❷ ❸ ❹ ❺ ❻ ❼

❹ Oval flat type ● ❺ Buffer specification: Non-rotating

❶ Vacuum inlet direction

Nil	Pad unit
T	Vertical
R	Lateral

❷/❸ Pad size

Symbol		❸ Length			
		07	**10**	**20**	**30**
❷ Breadth	**35**	● (3.5 x 7)	—	—	—
	40	—	● (4 x 10)	● (4 x 20)	● (4 x 30)
	50	—	● (5 x 10)	● (5 x 20)	● (5 x 30)
	60	—	● (6 x 10)	● (6 x 20)	● (6 x 30)
	80	—	—	● (8 x 20)	● (8 x 30)

❹ Material

N	NBR
S	Silicone rubber∗1
U	Urethane rubber
F	FKM
GN	Conductive NBR
GS	Conductive silicone rubber

∗1 Compliant with the FDA (USA Food and Drug Administration) regulation 21CFR§177.2600 for "Rubber articles intended for repeated use"

❺ Buffer stroke

Stroke [mm]	Pad size
	All sizes
10	●
20	●
30	●
40	●
50	●

With adapter

❻ Vacuum inlet/❼ Connection thread

○: ZP2-T/Vertical ●: ZP2-R/Lateral

❻ Vacuum inlet			❼ Connection thread			Pad size
Type	Symbol	Size	Type	Symbol	Size	All sizes
Female thread	**B5**	M5 x 0.8	—	**Nil**	—∗1	○
One-touch fitting	**04**	ø4	Male thread	**A5**	M5 x 0.8	●
			Female thread	**B5**	M5 x 0.8	●
	06	ø6	Male thread	**A5**	M5 x 0.8	●
			Female thread	**B5**	M5 x 0.8	●

∗1 Use the vacuum inlet.

With buffer

❻ Vacuum inlet/❼ Connection thread

○: ZP2-T/Vertical ●: ZP2-R/Lateral

❻ Vacuum inlet			❼ Connection thread			Pad size
Type	Symbol	Size	Type	Symbol	Size	All sizes
Female thread	**B5**	M5 x 0.8	Male thread	**Nil**	M10 x 1	○
One-touch fitting	**04**	ø4		**Nil**		○●
	06	ø6		**Nil**		○●

∗ The pad, mounting nut, and fitting are shipped together but do not come assembled.

Dimensions/Models

Single unit 3.5 x 7 to 8 x 30

ZP2 – 3507 W N
❶ ❷

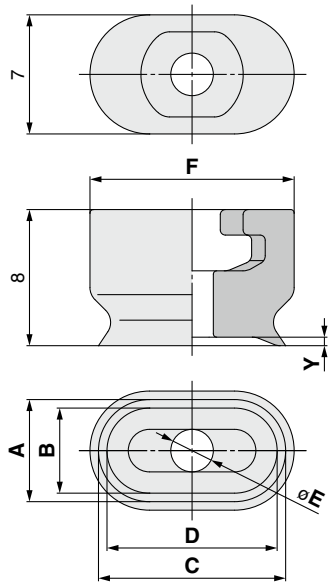

	Model ❶ Pad size Breadth	Length	Form	❷ *1 Material	A	B	C	D	E	F	Y
ZP2	35	07	W	N S U F GN GS	4.3	3.5	7.8	7	2 x 1.5	12	0.5
	40	10			4.8	4	10.8	10			
	50				6	5	11		2.5		
	60				7	6					
	40	20			4.8	4	20.8	20	2 x 1.8	20	
	50				6	5	21		2 x 2		
	60				7	6			2.5		
	80				9	8			3		0.8
	40	30			4.8	4	30.8	30	2 x 1.8	30	0.5
	50				6	5	31		2 x 2.5		
	60				7	6					
	80				9	8					0.8

*1 N: NBR, S: Silicone rubber, U: Urethane rubber, F: FKM, GN: Conductive NBR, GS: Conductive silicone rubber

Construction	p. 187
Mounting Bracket Assembly	From p. 195

With adapter 3.5 x 7 to 8 x 30

ZP2 – T 3507 W N – B5
❶ ❷ ❸

❸ Vacuum inlet (Female thread)

B5	M5 x 0.8

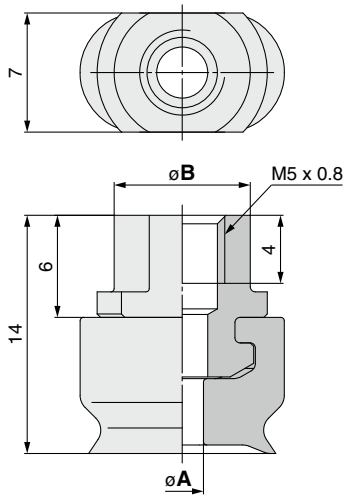

	Model Vacuum inlet direction	❶ Pad size Breadth	Length	Form	❷ *1 Material	❸ Vacuum inlet	A	B
ZP2	T	35	07	W	N S U F GN GS	B5	2 x 1.5	8
		40	10					
		50					2.5	
		60						
		40	20				2 x 1.8	11
		50					2 x 2	
		60					2.5	
		80					3	
		40	30				2 x 1.8	19
		50					2 x 2.5	
		60						
		80						

*1 N: NBR, S: Silicone rubber, U: Urethane rubber, F: FKM, GN: Conductive NBR, GS: Conductive silicone rubber

Construction	p. 187
Adapter Assembly	p. 195

Dimensions/Models

With adapter/One-touch fitting 3.5 x 7 to 8 x 30

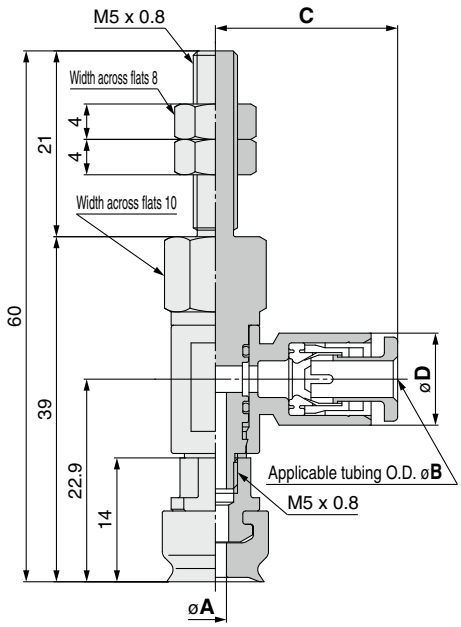

Construction	p. 187
Adapter Assembly	p. 195

ZP2 – R 3507 W N – 04 – A5

❶ ❷ ❸ ❹

❸ **Vacuum inlet (One-touch fitting)**

04	ø4
06	ø6

❹ **Connection thread (Male thread)**

A5	M5 x 0.8

Model									A
	Vacuum inlet direction	❶ Pad size Breadth	Pad size Length	Form	❷ *1 Material	❸ Vacuum inlet	❹ Connection thread		
ZP2	R	35	07	W	N S U F GN GS	04 06	A5		2 x 1.5
		40 50 60	10						2.5
		40	20						2 x 1.8
		50							2 x 2
		60							2.5
		80							3
		40	30						2 x 1.8
		50 60 80							2 x 2.5

Dimensions Per Vacuum Inlet

Model								B	C	D	Fitting part min. hole size
	Vacuum inlet direction	❶ Pad size Breadth	Pad size Length	Form	❷ *1 Material	❸ Vacuum inlet	❹ Connection thread				
ZP2	R	35	07	W	N S U F GN GS	04	A5	4	20.6	10.4	ø3
						06		6	21.6	12.4	ø4
		40 50 60	10			04		4	20.6	10.4	ø3
						06		6	21.6	12.4	ø4
		40 50 60 80	20			04		4	20.6	10.4	ø3
						06		6	21.6	12.4	ø4
		40 50 60 80	30			04		4	20.6	10.4	ø3
						06		6	21.6	12.4	ø4

*1 N: NBR, S: Silicone rubber, U: Urethane rubber, F: FKM, GN: Conductive NBR, GS: Conductive silicone rubber

Dimensions/Models

With adapter/One-touch fitting 3.5 x 7 to 8 x 30

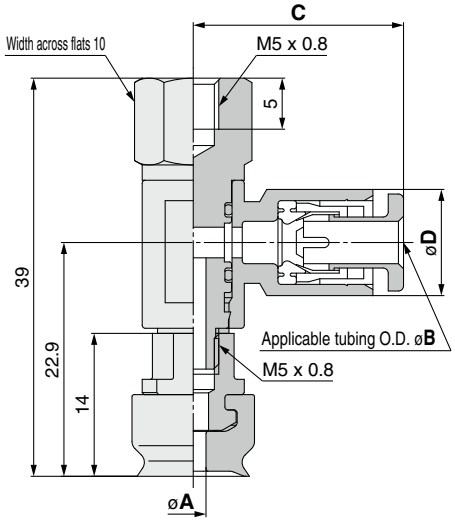

Construction	p. 187
Adapter Assembly	p. 195

ZP2 – R 3507 W N – 04 – B5
❶ ❷ ❸ ❹

❸ Vacuum inlet (One-touch fitting)

04	ø4
06	ø6

❹ Connection thread (Female thread)

B5	M5 x 0.8

Model								A
	Vacuum inlet direction	❶ Pad size Breadth	❶ Pad size Length	Form	❷ *1 Material	❸ Vacuum inlet	❹ Connection thread	
ZP2	R	35	07	W	N S U F GN GS	04 06	B5	2 x 1.5
		40	10					2.5
		50 60						
		40	20					2 x 1.8
		50						2 x 2
		60						2.5
		80						3
		40	30					2 x 1.8
		50 60 80						2 x 2.5

Dimensions Per Vacuum Inlet

Model								B	C	D	Fitting part min. hole size
	Vacuum inlet direction	❶ Pad size Breadth	❶ Pad size Length	Form	❷ *1 Material	❸ Vacuum inlet	❹ Connection thread				
ZP2	R	35	07	W	N S U F GN GS	04	B5	4	20.6	10.4	ø3
						06		6	21.6	12.4	ø4
		40 50 60	10			04		4	20.6	10.4	ø3
						06		6	21.6	12.4	ø4
		40 50 60 80	20			04		4	20.6	10.4	ø3
						06		6	21.6	12.4	ø4
		40 50 60 80	30			04		4	20.6	10.4	ø3
						06		6	21.6	12.4	ø4

*1 N: NBR, S: Silicone rubber, U: Urethane rubber, F: FKM, GN: Conductive NBR, GS: Conductive silicone rubber

Dimensions/Models

With buffer 3.5 x 7 to 8 x 30

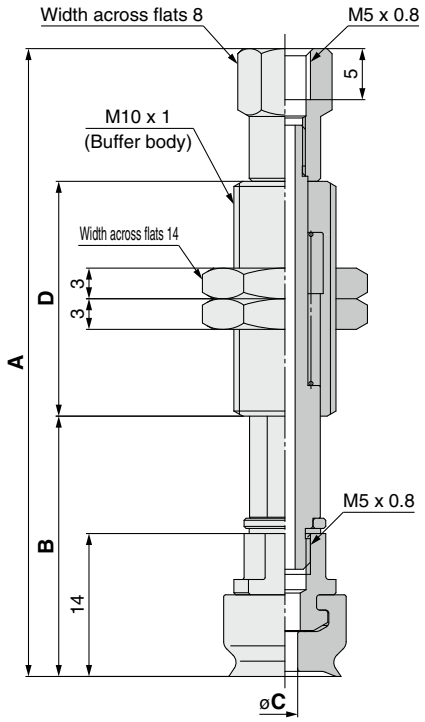

Vacuum inlet: One-touch fitting

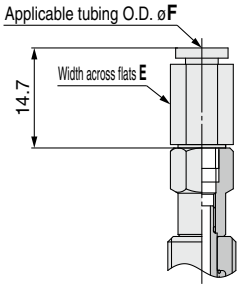

Construction	p. 188
Buffer Assembly	p. 196

Dimensions Per Vacuum Inlet: One-touch Fitting

Model									E	F	Fitting part min. hole size
	Vacuum inlet direction	❶ Pad size Breadth	Length	Form	❷ *1 Material	❸ Buffer spec.	❹ Buffer stroke	❺ Vacuum inlet			
ZP2	T	35	07	W	N S U F GN GS	K	10 20 30 40 50	04	8	4	ø2.5
								06	10	6	
		40 50 60	10					04	8	4	
								06	10	6	
		40 50 60 80	20					04	8	4	
								06	10	6	
		40 50 60 80	30					04	8	4	
								06	10	6	

ZP2 – T 3507 W N K 10 – B5
❶ ❷ ❹

Buffer specification ❸

K	Non-rotating

Vacuum inlet ❺

B5	M5 x 0.8	Female thread	
04	ø4	One-touch fitting	KQ2H04-M5N
06	ø6		KQ2H06-M5N

Model									A	B	C	D
	Vacuum inlet direction	❶ Pad size Breadth	Length	Form	❷ *1 Material	❸ Buffer spec.	❹ Buffer stroke	❺ Vacuum inlet				
ZP2	T	35	07	W	N S U F GN GS	K	10	B5	61.5	25.5	2 x 1.5	23
							20		99.5	35.5		51
							30		109.5	45.5		
							40		145.5	55.5		77
							50		155.5	65.5		
		40	10				10		61.5	25.5	2 x 1.5	23
							20		99.5	35.5		51
							30		109.5	45.5		
							40		145.5	55.5		77
							50		155.5	65.5		
		50 60					10		61.5	25.5	2.5	23
							20		99.5	35.5		51
							30		109.5	45.5		
							40		145.5	55.5		77
							50		155.5	65.5		
		40	20				10		61.5	25.5	2 x 1.8	23
							20		99.5	35.5		51
							30		109.5	45.5		
							40		145.5	55.5		77
							50		155.5	65.5		
		50					10		61.5	25.5	2 x 2	23
							20		99.5	35.5		51
							30		109.5	45.5		
							40		145.5	55.5		77
							50		155.5	65.5		
		60					10		61.5	25.5	2.5	23
							20		99.5	35.5		51
							30		109.5	45.5		
							40		145.5	55.5		77
							50		155.5	65.5		
		80					10		61.5	25.5	3	23
							20		99.5	35.5		51
							30		109.5	45.5		
							40		145.5	55.5		77
							50		155.5	65.5		
		40	30				10		61.5	25.5	2 x 1.8	23
							20		99.5	35.5		51
							30		109.5	45.5		
							40		145.5	55.5		77
							50		155.5	65.5		
		50 60 80					10		61.5	25.5	2 x 2.5	23
							20		99.5	35.5		51
							30		109.5	45.5		
							40		145.5	55.5		77
							50		155.5	65.5		

*1 N: NBR, S: Silicone rubber, U: Urethane rubber, F: FKM, GN: Conductive NBR, GS: Conductive silicone rubber

Dimensions/Models

With buffer/One-touch fitting 3.5 x 7 to 8 x 30

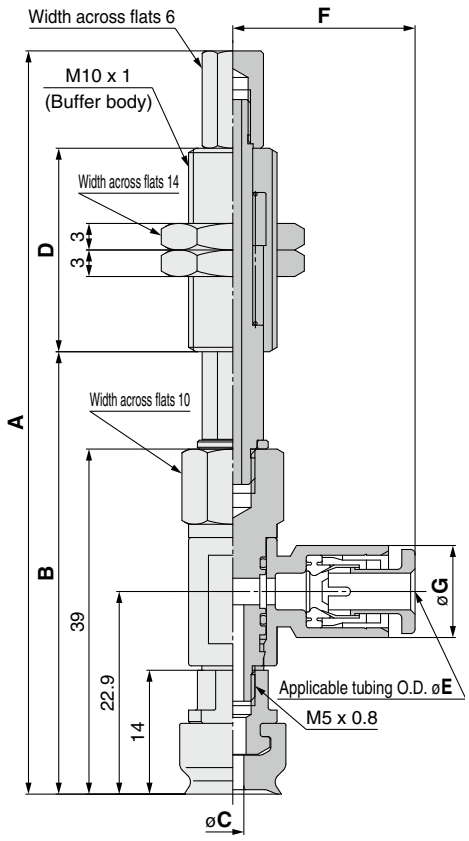

Construction	p. 188
Buffer Assembly	p. 197

ZP2 – R 3507 W N K 10 – 04
❶ ❷ ❸ ❹ ❺

Buffer specification ❸

K	Non-rotating

Vacuum inlet ❺ (One-touch fitting)

04	ø4
06	ø6

Dimensions Per Vacuum Inlet

Model									E	F	G	Fitting part min. hole size
	Vacuum inlet direction	❶ Pad size Breadth	Pad size Length	Form	❷ *1 Material	❸ Buffer spec.	❹ Buffer stroke	❺ Vacuum inlet				
ZP2	R	35	07	W	N S U F GN GS	K	10 20 30 40 50	04	4	20.6	10.4	ø3
								06	6	21.6	12.8	ø4
		40 50 60	10					04	4	20.6	10.4	ø3
								06	6	21.6	12.8	ø4
		40 50 60 80	20					04	4	20.6	10.4	ø3
								06	6	21.6	12.8	ø4
		40 50 60 80	30					04	4	20.6	10.4	ø3
								06	6	21.6	12.8	ø4

Model									A	B	C	D
	Vacuum inlet direction	❶ Pad size Breadth	Pad size Length	Form	❷ *1 Material	❸ Buffer spec.	❹ Buffer stroke	❺ Vacuum inlet				
ZP2	R	35	07	W	N S U F GN GS	K	10	04 06	84	50	2 x 1.5	23
							20		122	60		51
							30		132	70		
							40		168	80		77
							50		178	90		
		40	10				10		84	50	2 x 1.5	23
							20		122	60		51
							30		132	70		
							40		168	80		77
							50		178	90		
		50 60					10		84	50	2.5	23
							20		122	60		51
							30		132	70		
							40		168	80		77
							50		178	90		
		40	20				10		84	50	2 x 1.8	23
							20		122	60		51
							30		132	70		
							40		168	80		77
							50		178	90		
		50					10		84	50	2 x 2	23
							20		122	60		51
							30		132	70		
							40		168	80		77
							50		178	90		
		60					10		84	50	2.5	23
							20		122	60		51
							30		132	70		
							40		168	80		77
							50		178	90		
		80					10		84	50	3	23
							20		122	60		51
							30		132	70		
							40		168	80		77
							50		178	90		
		40	30				10		84	50	2 x 1.8	23
							20		122	60		51
							30		132	70		
							40		168	80		77
							50		178	90		
		50 60 80					10		84	50	2 x 2.5	23
							20		122	60		51
							30		132	70		
							40		168	80		77
							50		178	90		

*1 N: NBR, S: Silicone rubber, U: Urethane rubber, F: FKM, GN: Conductive NBR, GS: Conductive silicone rubber

Oval Pad *ZP Series*
Construction

With adapter **Oval flat type: 2004/3507/4010**

Vacuum inlet direction **Vertical** T Type/ZPT

ZPT□-(A5/A6)

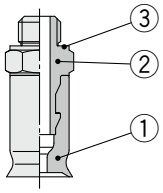

ZPT□-(B4/B5)

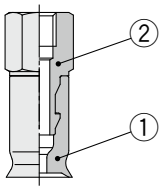

Component Parts

No.	Description	Material	Note
1	**Pad**	NBR, Silicone rubber, Urethane rubber, FKM, Conductive NBR, Conductive silicone rubber	Oval flat type
2	**Adapter**	Brass (Electroless nickel plating)	
3	**Gasket**	Stainless steel/NBR	

Vacuum inlet direction Lateral R Type/ZPR

ZPR□-(04/06)-(A5/A6)

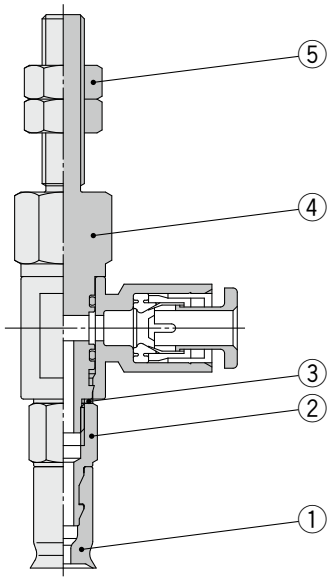

ZPR□-(04/06)-(B4/B5)

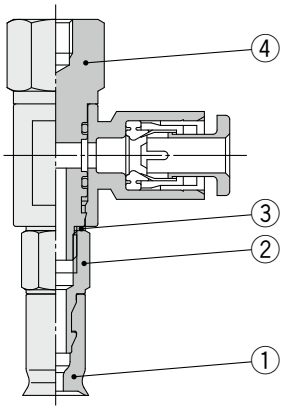

Component Parts

No.	Description	Material	Note
1	**Pad**	NBR, Silicone rubber, Urethane rubber, FKM, Conductive NBR, Conductive silicone rubber	Oval flat type
2	**Adapter**	Brass (Electroless nickel plating)	
3	**Gasket**	Stainless steel 304/NBR	
4	**Adapter** (With One-touch fitting)	Brass (Electroless nickel plating), PBT, NBR, Stainless steel, POM	
5	**Nut**	Rolled steel (Zinc chromated)	M5 x 0.8
		Brass (Nickel plating)	M6 x 1

Vacuum inlet direction Lateral Y Type/ZPY

ZPY□-(N4/N6/U4/U6)-(A5/A6)

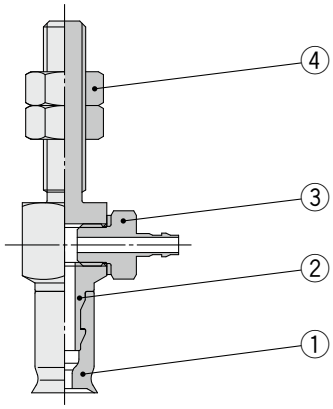

ZPY□-(N4/N6/U4/U6)-(B4/B5)

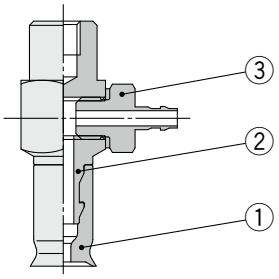

Component Parts

No.	Description	Material	Note
1	**Pad**	NBR, Silicone rubber, Urethane rubber, FKM, Conductive NBR, Conductive silicone rubber	Oval flat type
2	**Adapter**	Brass (Electroless nickel plating)	
3	**Barb fitting**	—	
4	**Nut**	Rolled steel (Zinc chromated)	M5 x 0.8
		Brass (Nickel plating)	M6 x 1

With buffer — Oval flat type: 2004/3507/4010

Vacuum inlet direction Vertical T Type/ZPT

ZPT□-(B3/B5)-A8

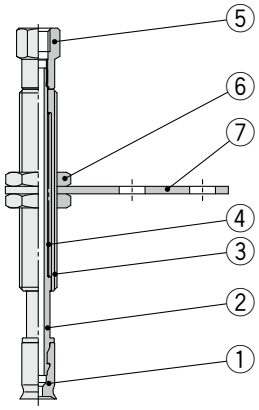

ZPT□-(04/06)-A8

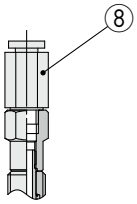

ZPT□-(N4/U4)-A8

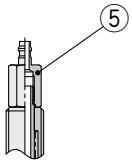

Component Parts

No.	Description	Material	Note
1	**Pad**	NBR, Silicone rubber, Urethane rubber, FKM, Conductive NBR, Conductive silicone rubber	Oval flat type
2	**Piston rod**	Stainless steel	
3	**Buffer body**	Brass (Electroless nickel plating)	
4	**Return spring**	Stainless steel	
5	**Buffer adapter**	Brass (Electroless nickel plating)	
6	**Nut**	Brass (Electroless nickel plating)	M8 x 1
7	**Buffer plate**	Steel (Trivalent chromated)	
8	**One-touch fitting**	—	

Vacuum inlet direction Lateral R Type/ZPR

ZPR□-(04/06)-A8

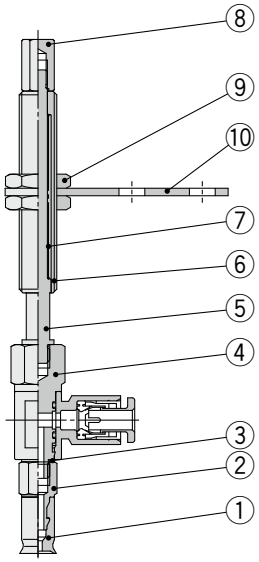

Component Parts

No.	Description	Material	Note
1	**Pad**	NBR, Silicone rubber, Urethane rubber, FKM, Conductive NBR, Conductive silicone rubber	Oval flat type
2	**Adapter**	Brass (Electroless nickel plating)	
3	**Gasket**	Stainless steel 304/NBR	
4	**Adapter** (With One-touch fitting)	Brass (Electroless nickel plating), PBT, NBR, Stainless steel, POM	
5	**Piston rod**	Stainless steel	
6	**Buffer body**	Brass (Electroless nickel plating)	
7	**Return spring**	Stainless steel	
8	**Buffer adapter**	Brass (Electroless nickel plating)	
9	**Nut**	Brass (Electroless nickel plating)	M8 x 1
10	**Buffer plate**	Steel (Trivalent chromated)	

Vacuum inlet direction Lateral Y Type/ZPY

ZPY□-(N4/N6/U4/U6)-A8

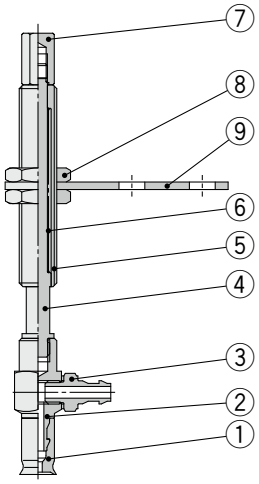

Component Parts

No.	Description	Material	Note
1	**Pad**	NBR, Silicone rubber, Urethane rubber, FKM, Conductive NBR, Conductive silicone rubber	Oval flat type
2	**Adapter**	Brass (Electroless nickel plating)	
3	**Barb fitting**	—	
4	**Piston rod**	Stainless steel	
5	**Buffer body**	Brass (Electroless nickel plating)	
6	**Return spring**	Stainless steel	
7	**Buffer adapter**	Brass (Electroless nickel plating)	
8	**Nut**	Brass (Electroless nickel plating)	M8 x 1
9	**Buffer plate**	Steel (Trivalent chromated)	

Oval Pad *ZP2 Series*
Construction

With adapter **Oval flat type: 3507 to 8030**

Vacuum inlet direction **Vertical** T Type/ZP2-T

ZP2-T□-B5

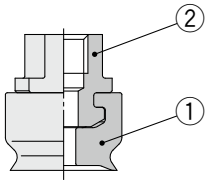

Component Parts

No.	Description	Material	Note
1	**Pad**	NBR, Silicone rubber, Urethane rubber, FKM, Conductive NBR, Conductive silicone rubber	Oval flat type
2	**Adapter**	Brass (Electroless nickel plating)	

Vacuum inlet direction **Lateral** R Type/ZP2-R

ZP2-R□-(04/06)-A5

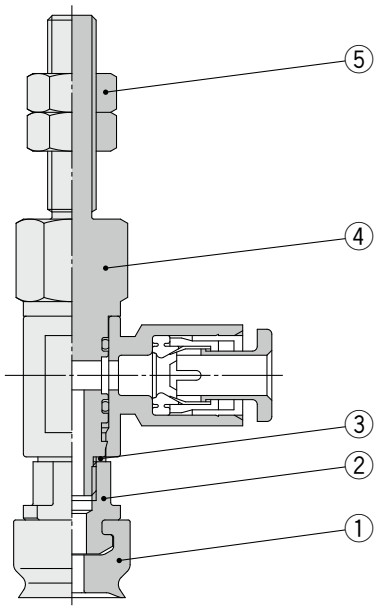

ZP2-R□-(04/06)-B5

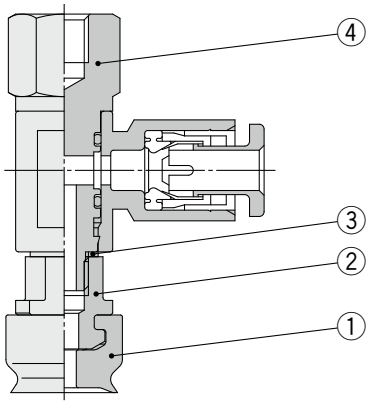

Component Parts

No.	Description	Material	Note
1	**Pad**	NBR, Silicone rubber, Urethane rubber, FKM, Conductive NBR, Conductive silicone rubber	Oval flat type
2	**Adapter**	Brass (Electroless nickel plating)	
3	**Gasket**	Stainless steel/NBR	
4	**Adapter** (With One-touch fitting)	Brass (Electroless nickel plating), PBT, NBR, Stainless steel, POM	
5	**Nut**	Rolled steel (Zinc chromated)	M5 x 0.8

With buffer **Oval flat type: 3507 to 8030**

Vacuum inlet direction **Vertical** T Type/ZP2-T

ZP2-T□-B5

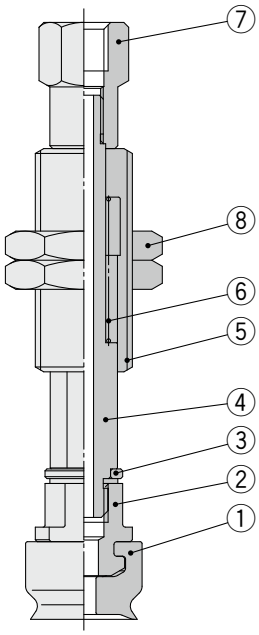

ZP2-T□-(04/06)

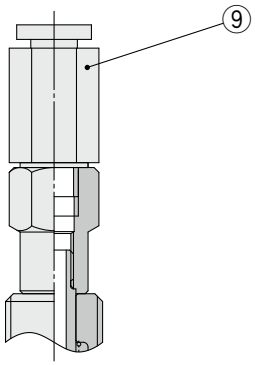

Component Parts

No.	Description	Material	Note
1	**Pad**	NBR, Silicone rubber, Urethane rubber, FKM, Conductive NBR, Conductive silicone rubber	Oval flat type
2	**Adapter**	Brass (Electroless nickel plating)	
3	**Gasket**	Stainless steel/NBR	
4	**Piston rod**	Stainless steel	
5	**Buffer body**	Brass (Electroless nickel plating)	
6	**Return spring**	Stainless steel	
7	**Buffer adapter**	Brass (Electroless nickel plating)	
8	**Nut**	Brass (Electroless nickel plating)	M10 x 1
9	**One-touch fitting**	—	

Vacuum inlet direction Lateral R Type/ZP2-R

ZP2-R□-(04/06)

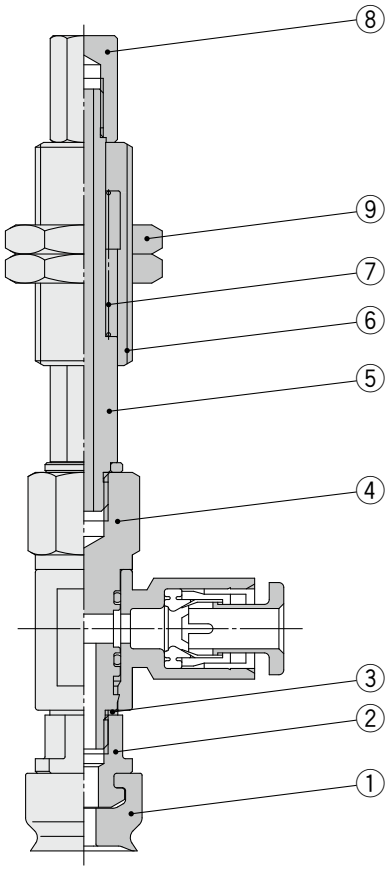

Component Parts

No.	Description	Material	Note
1	**Pad**	NBR, Silicone rubber, Urethane rubber, FKM, Conductive NBR, Conductive silicone rubber	Oval flat type
2	**Adapter**	Brass (Electroless nickel plating)	
3	**Gasket**	Stainless steel/NBR	
4	**Adapter** (With One-touch fitting)	Brass (Electroless nickel plating), PBT, NBR, Stainless steel, POM	
5	**Piston rod**	Stainless steel	
6	**Buffer body**	Brass (Electroless nickel plating)	
7	**Return spring**	Stainless steel	
8	**Buffer adapter**	Brass (Electroless nickel plating)	
9	**Nut**	Brass (Electroless nickel plating)	M10 x 1

Oval Pad *ZP Series*
Mounting Bracket Assembly

Adapter Assembly: Vacuum Inlet Direction **Vertical** T Type/ZPT

Product part no.

ZPT ① U □ - ②

- ① Pad size
- □ Pad material
- ② Vacuum inlet (Male/Female thread)

Component parts

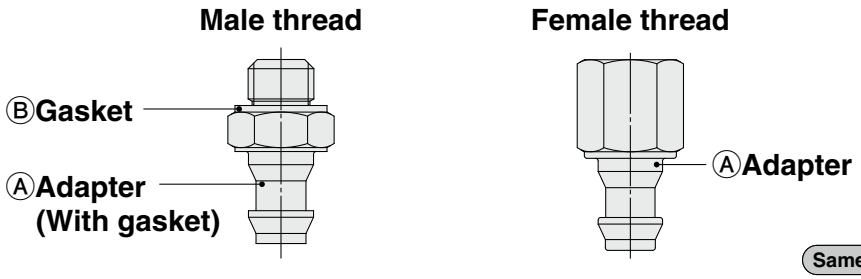

Same for the ZP/Basic type

			Symbol	❶ Pad size symbol		
				2004	3507	4010
ⒶAdapter	❷Vacuum inlet	Male thread	M5 x 0.8	A5	ZPT1-A5	
			M6 x 1	A6	ZPT1-A6	
		Female thread	M4 x 0.7	B4	ZPT1-B4	
			M5 x 0.8	B5	ZPT1-B5	
ⒷGasket (Single unit)			For M5 x 0.8	M-5G2		
			For M6 x 1	M-6G		

Adapter Assembly: With One-touch Fitting, Vacuum Inlet Direction Lateral R Type/ZPR

Product part no.

ZPR ① U □ - ② - ③

- ① Pad size
- □ Pad material
- ② Vacuum inlet (One-touch fitting)
- ③ Connection thread (Male/Female thread)

Component parts

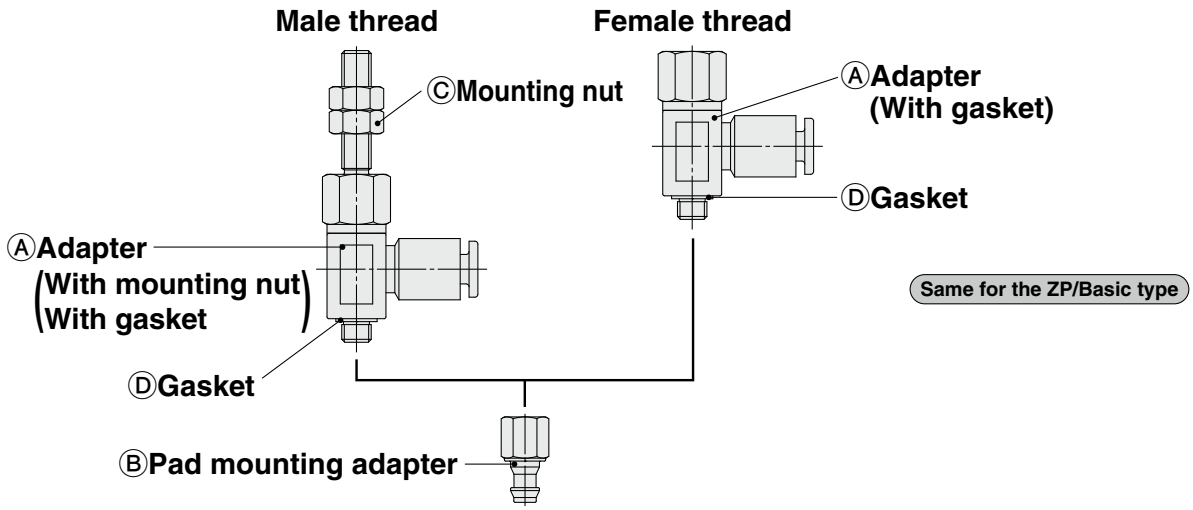

				Symbol			Symbol	❶Pad size symbol		
								2004	3507	4010
Ⓐ Adapter	❷ Vacuum inlet	One-touch fitting	ø4	04	❸ Connection thread	Male thread	M5 x 0.8	A5	ZPRS-04-A5	
							M6 x 1	A6	ZPRS-04-A6	
						Female thread	M4 x 0.7	B4	ZPRS-04-B4	
							M5 x 0.8	B5	ZPRS-04-B5	
			ø6	06		Male thread	M5 x 0.8	A5	ZPRS-06-A5	
							M6 x 1	A6	ZPRS-06-A6	
						Female thread	M4 x 0.7	B4	ZPRS-06-B4	
							M5 x 0.8	B5	ZPRS-06-B5	
Ⓑ Pad mounting adapter								ZPT1-B5		
Ⓒ Mounting nut (Single unit)							M5 x 0.8	NTJ-015A		
							M6 x 1	ZPNA-M6		
Ⓓ Gasket (Single unit)								M-5G2		

Adapter Assembly: With Barb Fitting, Vacuum Inlet Direction Lateral Y Type/ZPY

Product part no.

ZPY ① U □ - ② - ③

- ① Pad size
- □ Pad material
- ② Vacuum inlet (Barb fitting)
- ③ Connection thread (Male/Female thread)

Component parts

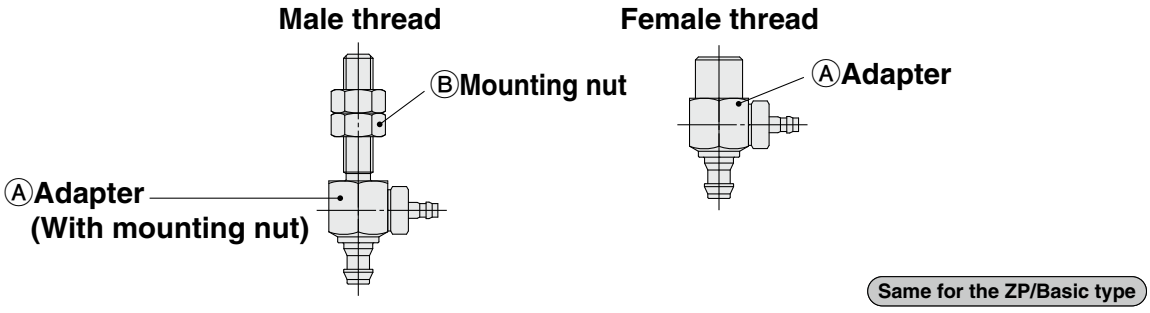

Same for the ZP/Basic type

Ⓐ Adapter: ❷ Vacuum inlet	Barb fitting	Symbol	❸ Connection thread		Symbol	❶ Pad size symbol: 2004	3507	4010
	For ø4 nylon tubing	N4	Male thread	M5 x 0.8	A5	ZPY1-N4-A5		
				M6 x 1	A6	ZPY1-N4-A6		
			Female thread	M4 x 0.7	B4	ZPY1-N4-B4		
				M5 x 0.8	B5	ZPY1-N4-B5		
	For ø6 nylon tubing	N6	Male thread	M5 x 0.8	A5	ZPY1-N6-A5		
				M6 x 1	A6	ZPY1-N6-A6		
			Female thread	M4 x 0.7	B4	ZPY1-N6-B4		
				M5 x 0.8	B5	ZPY1-N6-B5		
	For ø4 soft tubing	U4	Male thread	M5 x 0.8	A5	ZPY1-U4-A5		
				M6 x 1	A6	ZPY1-U4-A6		
			Female thread	M4 x 0.7	B4	ZPY1-U4-B4		
				M5 x 0.8	B5	ZPY1-U4-B5		
	For ø6 soft tubing	U6	Male thread	M5 x 0.8	A5	ZPY1-U6-A5		
				M6 x 1	A6	ZPY1-U6-A6		
			Female thread	M4 x 0.7	B4	ZPY1-U6-B4		
				M5 x 0.8	B5	ZPY1-U6-B5		
Ⓑ Mounting nut (Single unit)				M5 x 0.8		NTJ-015A		
				M6 x 1		ZPNA-M6		

Buffer Assembly: Vacuum Inlet Direction **Vertical** T Type/ZPT

Product part no.

ZPT ① U □ (J/K) ② - ③ - A8

- ① Pad size
- □ Pad material
- (J/K) J: Rotating, K: Non-rotating
- ② Buffer stroke
- ③ Vacuum inlet (Female thread/One-touch fitting/Barb fitting)

Component parts

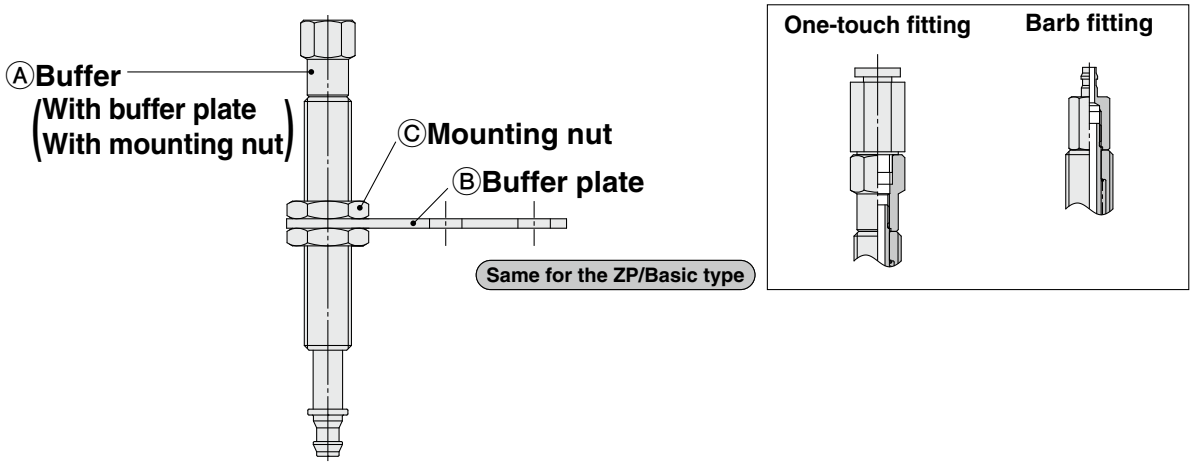

			Symbol	❶ Pad size symbol		
				2004	3507	4010
❷ Buffer stroke	Stroke		6	●	●	●
			10	●	●	●
			15	●	●	●
			25	●	●	●
Ⓐ Buffer / ❸ Vacuum inlet	Female thread	M3 x 0.5	B3	ZPB1(J/K)②-B3		
		M5 x 0.8	B5	ZPB1(J/K)②-B5		
	One-touch fitting	ø4	04	ZPB1(J/K)②-04		
		ø6	06	ZPB1(J/K)②-06		
	Barb fitting	For ø4 nylon tubing	N4	ZPB1(J/K)②-N4		
		For ø4 soft tubing	U4	ZPB1(J/K)②-U4		
Ⓑ Buffer plate (Single unit)				ZPB1		
Ⓒ Mounting nut (Single unit)		M8 x 1		ZPNA-M8		

[Buffer assembly part number example]

Product part no. ZPT2004UN J 10 – B5 – A8

Buffer assembly ZPB1 J 10 – B5

②Buffer stroke

Buffer Assembly: With One-touch Fitting, Vacuum Inlet Direction Lateral R Type/ZPR

Product part no.

ZPR ① U □ (J/K) ② - ③ - A8

- ① Pad size
- U Pad material
- (J/K) J: Rotating, K: Non-rotating
- ② Buffer stroke
- ③ Vacuum inlet (One-touch fitting)

Component parts

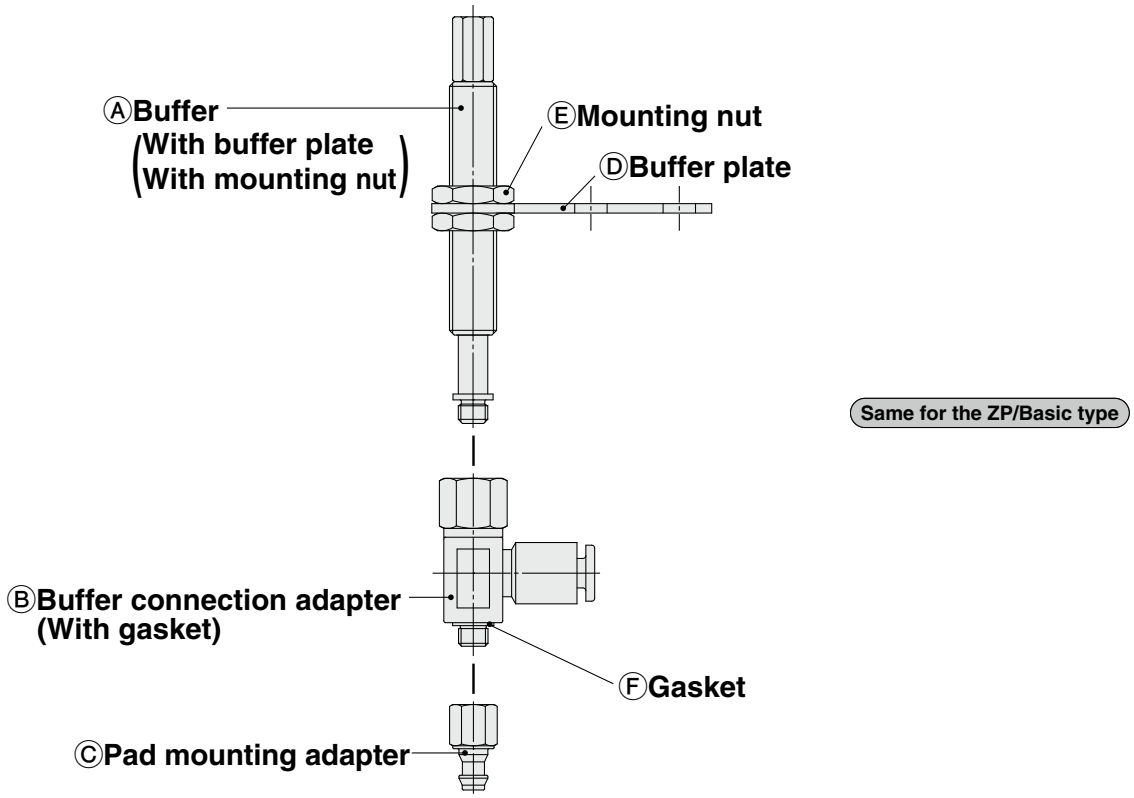

		Symbol	①Pad size symbol		
			2004	3507	4010
②Buffer stroke	Stroke	6	●	●	●
		10	●	●	●
		15	●	●	●
		25	●	●	●
ⒶBuffer			ZPB1(J/K)②		
ⒷBuffer connection adapter ③Vacuum inlet One-touch fitting	ø4	04	ZPRS04-B5		
	ø6	06	ZPRS06-B5		
ⒸPad mounting adapter			ZPT1-B5		
ⒹBuffer plate (Single unit)			ZPB1		
ⒺMounting nut (Single unit)	M8 x 1		ZPNA-M8		
ⒻGasket (Single unit)			M-5G2		

[Buffer assembly part number example]

Product part no. ZPR3507UN K 15 – 04 – A8

Buffer assembly ZPB1 K 15

②Buffer stroke

Buffer Assembly: With Barb Fitting, Vacuum Inlet Direction Lateral Y Type/ZPY

Product part no.

ZPY ① U □ (J/K) ② - ③ - A8

- ① Pad size
- □ Pad material
- (J/K) J: Rotating, K: Non-rotating
- ② Buffer stroke
- ③ Vacuum inlet (Barb fitting)

Component parts

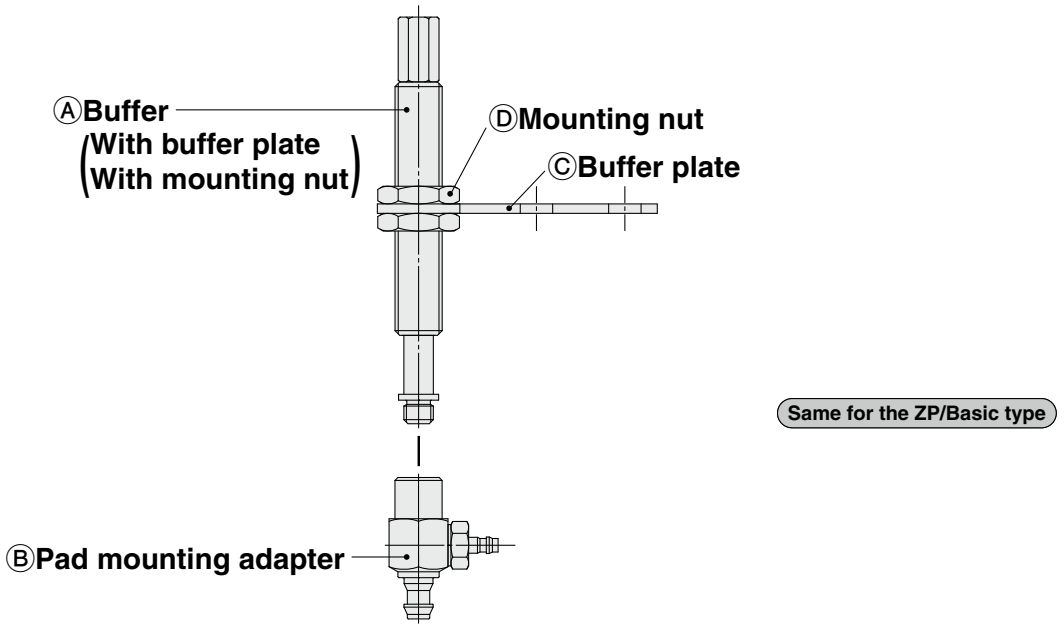

		Symbol	① Pad size symbol		
			2004	3507	4010
② Buffer stroke	Stroke	6	●	●	●
		10	●	●	●
		15	●	●	●
		25	●	●	●
Ⓐ Buffer			ZPB1(J/K)②		
Ⓑ Pad mounting adapter ③ Vacuum inlet Barb fitting	For ø4 nylon tubing	N4	ZPY1-N4-B5		
	For ø6 nylon tubing	N6	ZPY1-N6-B5		
	For ø4 soft tubing	U4	ZPY1-U4-B5		
	For ø6 soft tubing	U6	ZPY1-U6-B5		
Ⓒ Buffer plate (Single unit)			ZPB1		
Ⓓ Mounting nut (Single unit)	M8 x 1		ZPNA-M8		

[Buffer assembly part number example]

Product part no. ZPY4010UF K 10 – 06 – A8

Buffer assembly ZPB1 K 10

② Buffer stroke

Oval Pad *ZP2 Series*
Mounting Bracket Assembly

Adapter Assembly: Vacuum Inlet Direction **Vertical** T Type/ZP2-T

Product part no.

ZP2 - T ① W □ - ②

- ① Pad size
- W Oval flat type
- □ Pad material
- ② Vacuum inlet (Female thread)

Component parts

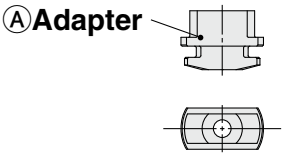

				Symbol	❶Pad size symbol											
					3507	4010	5010	6010	4020	5020	6020	8020	4030	5030	6030	8030
Ⓐ Adapter	❷ Vacuum inlet	Female thread	M5 x 0.8	B5	ZP2A-001				ZP2A-002				ZP2A-003			

Adapter Assembly: With One-touch Fitting, Vacuum Inlet Direction **Lateral** R Type/ZP2-R

Product part no.

ZP2 - R ① W □ - ② - ③

- ① Pad size
- W Oval flat type
- □ Pad material
- ② Vacuum inlet (One-touch fitting)
- ③ Connection thread (Male/Female thread)

Component parts

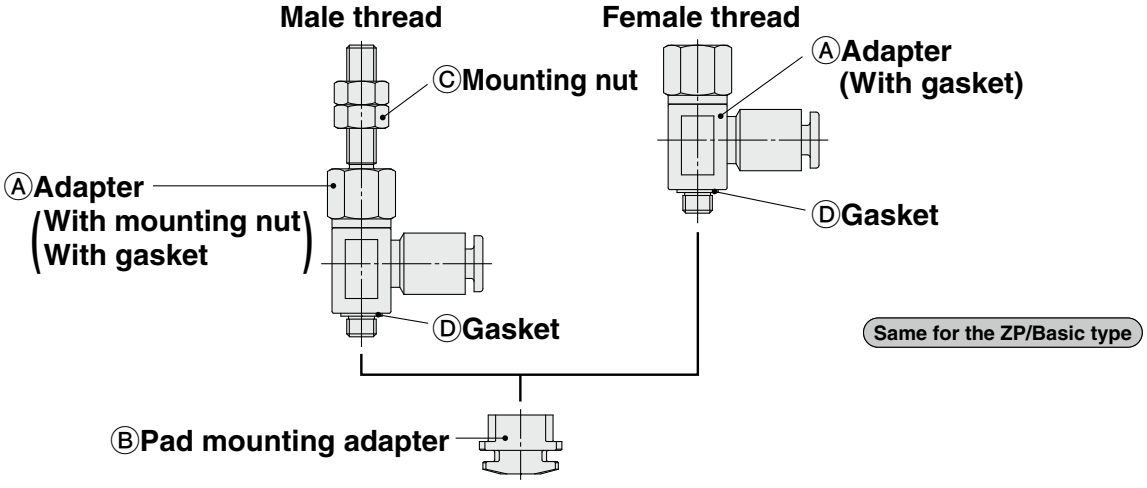

				Symbol				Symbol	❶Pad size symbol											
									3507	4010	5010	6010	4020	5020	6020	8020	4030	5030	6030	8030
Ⓐ Adapter	❷ Vacuum inlet	One-touch fitting	ø4	04	❸ Connection thread	Male thread	M5 x 0.8	A5	ZPRS-04-A5											
						Female thread	M5 x 0.8	B5	ZPRS-04-B5											
			ø6	06		Male thread	M5 x 0.8	A5	ZPRS-06-A5											
						Female thread	M5 x 0.8	B5	ZPRS-06-B5											
Ⓑ Pad mounting adapter									ZP2A-001				ZP2A-002				ZP2A-003			
Ⓒ Mounting nut (Single unit)							M5 x 0.8		NTJ-015A											
Ⓓ Gasket (Single unit)									M-5G2											

SMC

Buffer Assembly: Vacuum Inlet Direction **Vertical** T Type/ZP2-T

Product part no.

ZP2 - T ① W □ K ② - ③

- ① Pad size
- W Oval flat type
- □ Pad material
- K Buffer specification: Non-rotating
- ② Buffer stroke
- ③ Vacuum inlet (Female thread/One-touch fitting)

Component parts

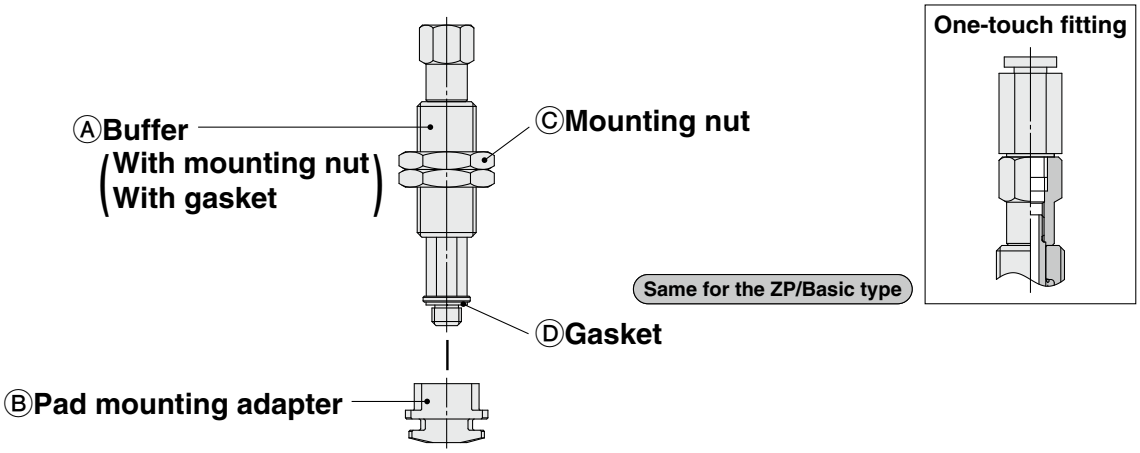

			Symbol	① Pad size symbol											
				3507	4010	5010	6010	4020	5020	6020	8020	4030	5030	6030	8030
② Buffer stroke	Stroke		10	●											
			20	●											
			30	●											
			40	●											
			50	●											
Ⓐ Buffer ③ Vacuum inlet	Female thread	M5 x 0.8	B5	ZPB2K②-B5											
	One-touch fitting	ø4	04	ZPB2K②-04											
		ø6	06	ZPB2K②-06											
Ⓑ Pad mounting adapter				ZP2A-001				ZP2A-002				ZP2A-003			
Ⓒ Mounting nut (Single unit)		M10 x 1		ZPNA-M10											
Ⓓ Gasket (Single unit)				M-5G2											

[Buffer assembly part number example]

Product part no. ZP2-T6010WN K 10 – B5

Buffer assembly ZPB2 K 10 – B5

② Buffer stroke

Buffer Assembly: With One-touch Fitting, Vacuum Inlet Direction Lateral R Type/ZP2-R

Product part no.

ZP2 - R ① W □ K ② - ③

- ① Pad size
- W Oval flat type
- □ Pad material
- K Buffer specification: Non-rotating
- ② Buffer stroke
- ③ Vacuum inlet (One-touch fitting)

Component parts

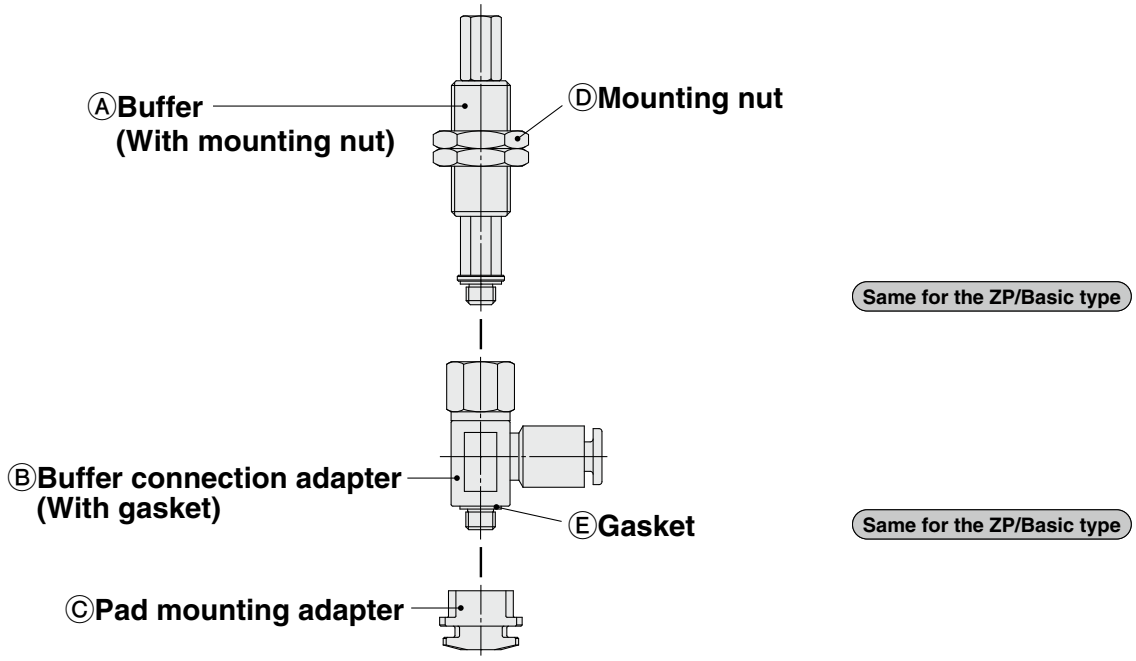

		Symbol	① Pad size symbol											
			3507	4010	5010	6010	4020	5020	6020	8020	4030	5030	6030	8030
② Buffer stroke	Stroke	10	●											
		20	●											
		30	●											
		40	●											
		50	●											
Ⓐ Buffer			ZPB2K②											
Ⓑ Buffer connection adapter ② Vacuum inlet One-touch fitting	ø4	04	ZPRS-04-B5											
	ø6	06	ZPRS-06-B5											
Ⓒ Pad mounting adapter			ZP2A-001				ZP2A-002			ZP2A-003				
Ⓓ Mounting nut (Single unit)	M10 x 1		ZPNA-M10											
Ⓔ Gasket (Single unit)			M-5G2											

[Buffer assembly part number example]

Product part no. ZP2-R8030WF K 30 – 06

Buffer assembly ZPB2 K 30

② Buffer stroke

Oval Pad
Specific Product Precautions

Be sure to read this before handling the products. Refer to page 375 for safety instructions. For vacuum equipment and vacuum pad precautions, refer to pages 376 to 379.

Mounting

1. Tighten the screw within the specified torque range when mounting the buffer.

Tightening with a torque outside of the specified range may cause malfunction.

Oval Pad ZP Series

Model	Connection thread	Tightening torque [N·m]
ZP□(J/K)□-□-A8	M8 x 1	1.5 to 2.0

Oval Pad ZP2 Series

Model	Connection thread	Tightening torque [N·m]
ZP2-□K□-□	M10 x 1	2.5 to 3.5

High Rigidity Pad *ZP3E Series* RoHS

ø32, ø40, ø50, ø63, ø80, ø100, ø125

Flat Type with Groove, Bellows Type with Ribs and Groove

Stable suction position, Improved ease of removal

Number of mounting screws reduced (4 pcs. → 1 pc.)

Pad and metal parts can be disposed of separately.

Improved uneven workpiece surface suction



For carton formers/palletizers

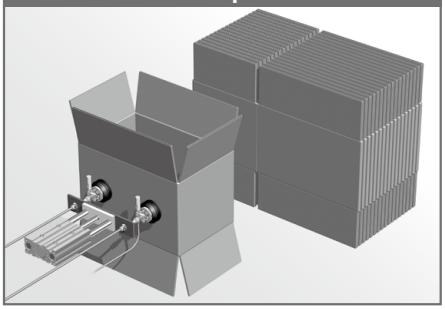

For the adsorption of glass workpieces

For use where adsorption marks must not be left on workpieces



For the adsorption of car bodies

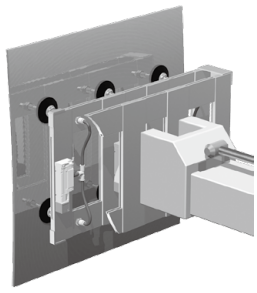

CONTENTS

High Rigidity Pad *ZP3E Series*

Features ..... p. 201
Variations ..... p. 203
Specifications ..... p. 204

Flat Type with Groove
· How to Order ..... p. 208
· Dimensions/Models ..... p. 209

Ball Joint, Flat Type with Groove
· How to Order ..... p. 214
· Dimensions/Models ..... p. 215

Bellows Type with Ribs and Groove
· How to Order ..... p. 220
· Dimensions/Models ..... p. 221

Ball Joint, Bellows Type with Ribs and Groove
· How to Order ..... p. 226
· Dimensions/Models ..... p. 227

Construction
Standard Type ..... p. 233
Ball Joint Type ..... p. 235

Mounting Bracket Assembly
Standard Type ..... p. 237
Ball Joint Type ..... p. 241

How to Replace the Pad ..... p. 245
Specific Product Precautions ..... p. 246

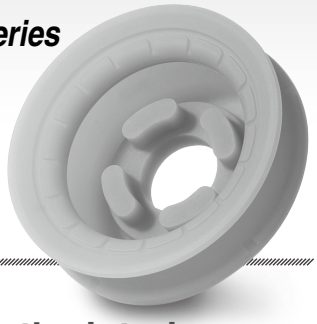

Stability of suction position

Groove and rib formed to adsorb with entire surface



- **Groove on the adsorption surface secures the interior space.**
- **The ribs reduce inclinations during the transport of workpieces.**

ZP (Existing model/Bellows pad)

ZP3E (Bellows pad)

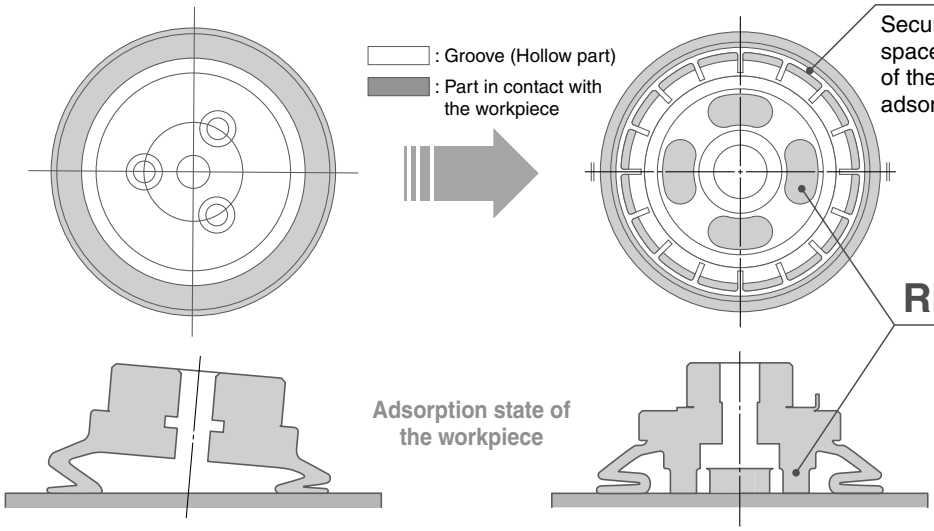

Improved ease of removal

With groove

The dents and bumps on the adsorption surface prevent workpieces from sticking to the pad. This facilitates easy removal.

Shot-blasted

Micro-dents and bumps are formed on the adsorption surface. Workpieces can be removed easily.

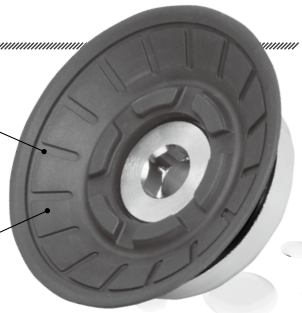

Reduced number of mounting screws

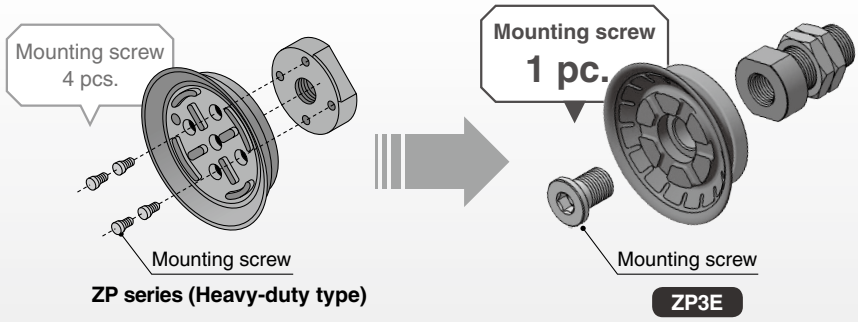

ZP series (Heavy-duty type)

ZP3E

Can be disposed of separately

The rubber pad and metal parts can be separated.

The metal parts and rubber parts can be separated completely.

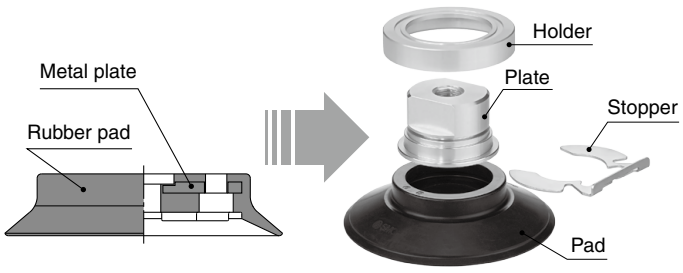

ZP series (Heavy-duty type) ZP3E

Mark-free

For use where adsorption marks must not be left on workpieces

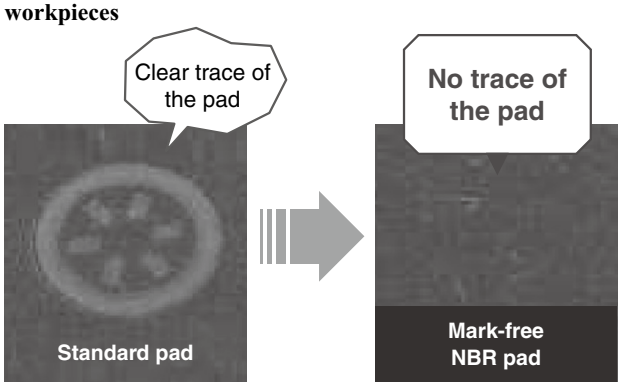

Suction flow rate increased

Applicable to workpieces with large suction flow rates and high permeability and to vacuum blow pumps with large suction flow rates

Double suction port size
(Pad diameter: ø63, ø80 Compared with the ZP series)

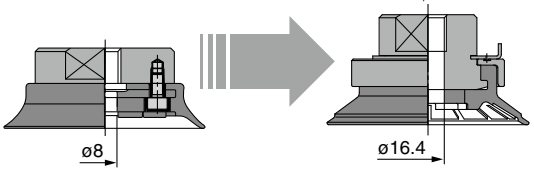

	ZP (Existing model)		ZP3E	
Pad diameter	Suction port	Area [mm²]	Suction port	Area [mm²]
ø32	—	—	ø8.4	55.4
ø40	ø6	28.3		
ø50				
ø63	ø8	50.2	ø16.4	211
ø80				
ø100	ø10	78.52		
ø125				

Ball joint type pad with reduced weight

Weight reduced by changes to the internal structure and materials

∗ The pad material weighed was NBR.

Weight reduced by up to 290 g

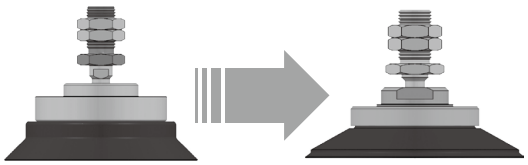

	ZP2/Flat type	ZP3E/Flat type with groove
Pad diameter	Weight [g]	Weight [g]
ø32	—	56
ø40	91	57
ø50	110	75
ø63	230	150
ø80	270	160
ø100	430	190
ø125	560	270

Direct mounting type with a male thread has been added.

Direct mounting

- Reduced height
- Easy mounting due to tightening only requiring a hexagonal wrench

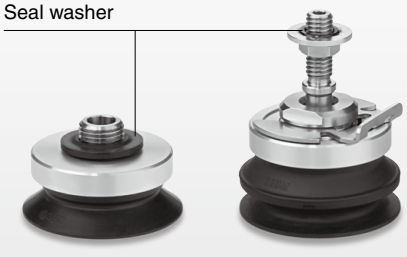

Standard type **Ball joint type**

ZP3E

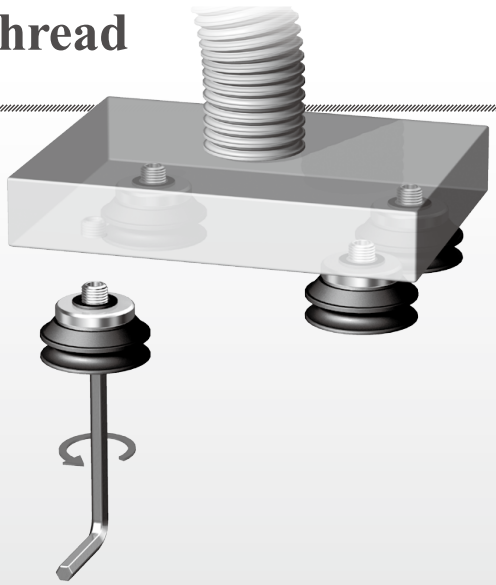

Variations

Standard Type

Ball Joint Type

Vacuum inlet direction		Vacuum inlet direction	Standard Type: Flat type with groove	Standard Type: Bellows type with ribs and groove	Ball Joint Type: Vacuum inlet direction	Ball Joint Type: Flat type with groove	Ball Joint Type: Bellows type with ribs and groove
Vacuum inlet direction	Single unit	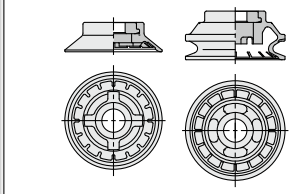	p. 209	p. 221	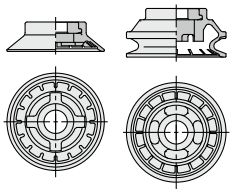	p. 215	p. 227
Vertical	ZP3E-T With adapter	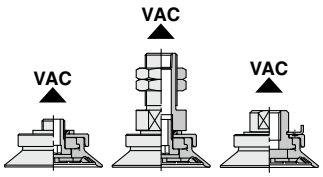	p. 209 p. 210	p. 221 p. 222	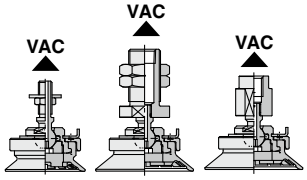	p. 215 p. 216	p. 227 p. 228
Lateral	ZP3E-Y With adapter	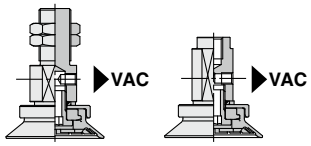	p. 211	p. 223	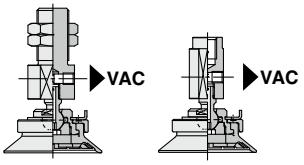	p. 217	p. 229 p. 230
Vertical	ZP3E-T With buffer	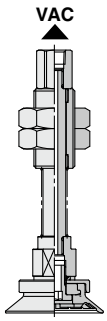	p. 212	p. 224	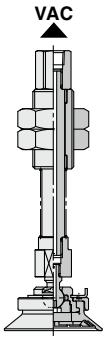	p. 218	p. 231
Lateral	ZP3E-Y With buffer	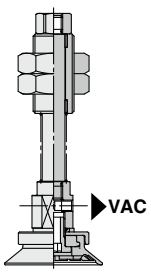	p. 213	p. 225	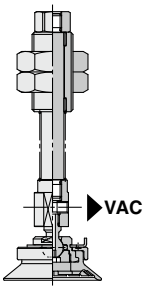	p. 219	p. 232

High Rigidity Pad *ZP3E Series*
Specifications

Pad Material

Material	NBR (Nitrile rubber)	Silicone rubber*1	Urethane rubber	FKM (Fluoro rubber)	Mark-free NBR
Color of rubber	Black	White	Brown	Black	
Rubber hardness (±5°)	A55/S	A50/S		A60/S	
Identification (Symbol)	—	—	—	Ⓕ	—

*1 Compliant with the FDA (USA Food and Drug Administration) regulation 21CFR§177.2600 for "Rubber articles intended for repeated use"

Adapter Specifications

Vertical



Vacuum Inlet Direction **Vertical** T Type/ZP3E-T

Connection		Male thread				Female thread	
Pad diameter		ø32 to ø50		ø63 to ø125		ø32 to ø50	ø63 to ø125
Connection thread		M10 x 1	M14 x 1	M16 x 1.5	M16 x 1.5	M8 x 1.25 M10 x 1.5	M12 x 1.75 M18 x 1.5
Vacuum inlet	Female thread	Use the connection thread.	Rc1/8	Use the connection thread.	Rc1/8	Use the connection thread.	Use the connection thread.

Lateral



Vacuum Inlet Direction Lateral Y Type/ZP3E-Y

Connection		Male thread		Female thread	
Pad diameter		ø32 to ø50	ø63 to ø125	ø32 to ø50	ø63 to ø125
Connection thread		M14 x 1	M16 x 1.5	M8 x 1.25	M12 x 1.75
Vacuum inlet	Female thread	M5 x 0.8	Rc1/8	M5 x 0.8	Rc1/8

Buffer Specifications

Vertical
Lateral



Pad diameter		ø32 to ø50			ø63 to ø125		
Non-rotating specification		JB: Rotating, With bushing					
Stroke [mm]		10	30	50	10	30	50
Connection thread		M18 x 1.5			M22 x 1.5		
Spring reactive force [N]	At 0 stroke	5.0			10.0		
	At full stroke	6.5	8.5	10.5	11.5	13.5	15.5

Adapter Specifications (Ball Joint Type)

Ball joint rotating angle	30°

Vertical



Vacuum Inlet Direction Vertical T Type/ZP3E-TF

Connection		Male thread				Female thread	
Pad diameter		ø32 to ø50		ø63 to ø125		ø32 to ø50	ø63 to ø125
Connection thread		M6 x 1	M14 x 1	M12 x 1.25	M16 x 1.5	M8 x 1.25	M12 x 1.75
Vacuum inlet	Female thread	Use the connection thread.	Rc1/8	Use the connection thread.	Rc1/8	Use the connection thread.	Use the connection thread.

Lateral



Vacuum Inlet Direction Lateral Y Type/ZP3E-YF

Connection		Male thread		Female thread	
Pad diameter		ø32 to ø50	ø63 to ø125	ø32 to ø50	ø63 to ø125
Connection thread		M14 x 1	M16 x 1.5	M8 x 1.25	M12 x 1.75
Vacuum inlet	Female thread	M5 x 0.8	Rc1/8	M5 x 0.8	Rc1/8

Buffer Specifications (Ball Joint Type)

Vertical Lateral

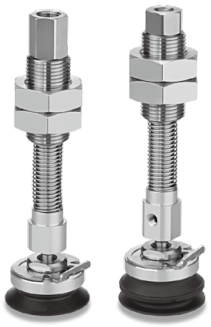

Pad diameter		ø32 to ø50			ø63 to ø125		
Non-rotating specification		JB: Rotating, With bushing					
Stroke [mm]		10	30	50	10	30	50
Connection thread		M18 x 1.5			M22 x 1.5		
Spring reactive force [N]	At 0 stroke	5.0			10.0		
	At full stroke	6.5	8.5	10.5	11.5	13.5	15.5

Pad Displacement to Vacuum Pressure (Flat Type with Groove)

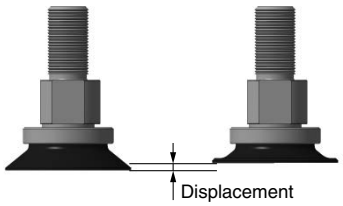

The data shown below are only for reference and are not guaranteed. These values depend on the operating environment, workpiece mass and transfer method. Therefore, thorough research and confirmation are necessary before use.

NBR (N): ——— Silicone rubber (S): ····· Urethane rubber (U): – – – – – FKM (F): —·—·— Mark-free NBR (CL): —··—··

ZP3E-32UM□

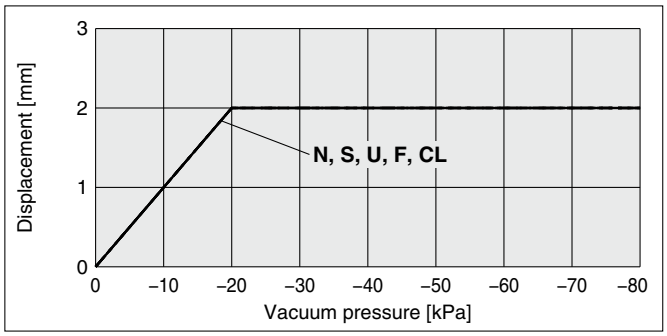

ZP3E-80UM□

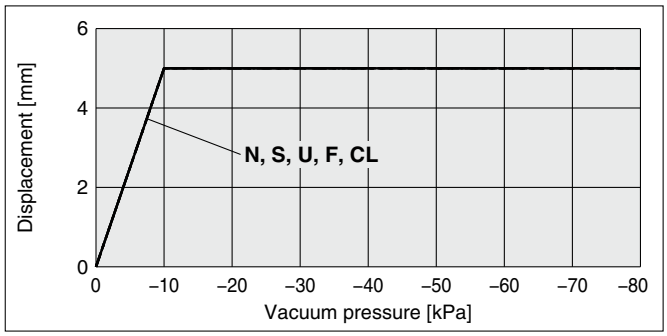

ZP3E-40UM□

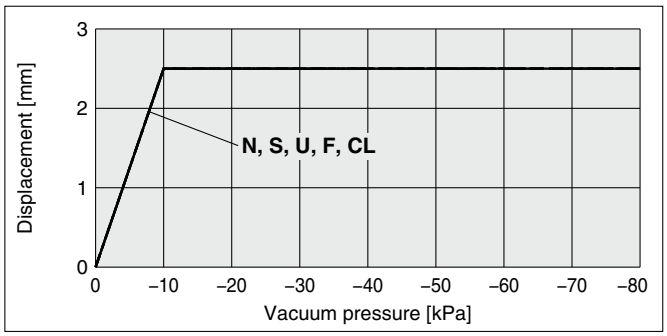

ZP3E-100UM□

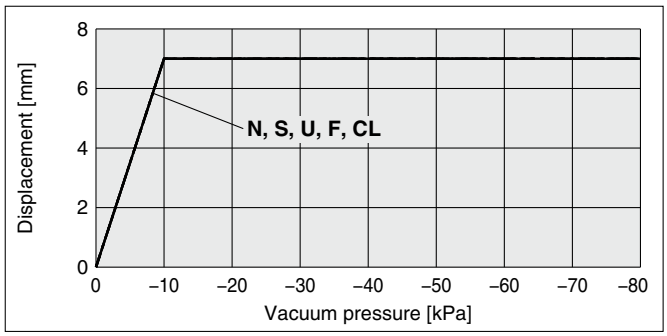

ZP3E-50UM□

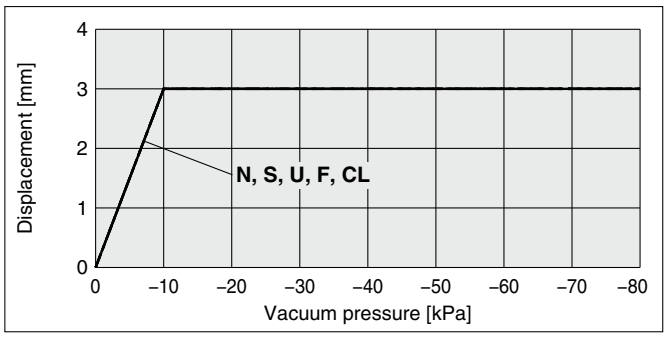

ZP3E-125UM□

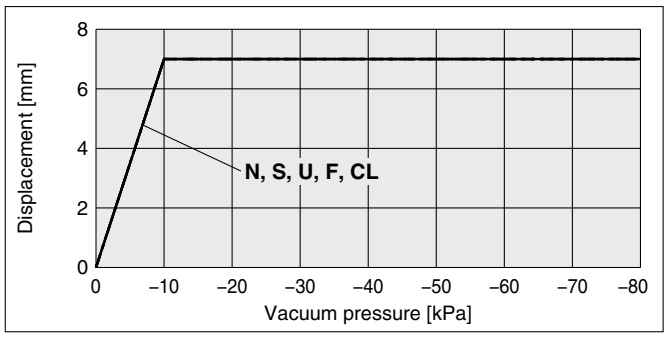

ZP3E-63UM□

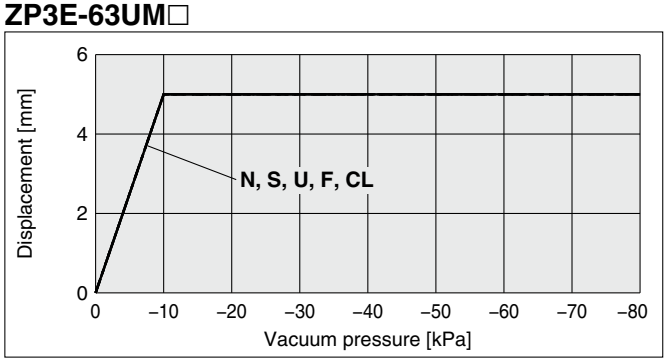

Pad Displacement to Vacuum Pressure (Bellows Type with Groove)

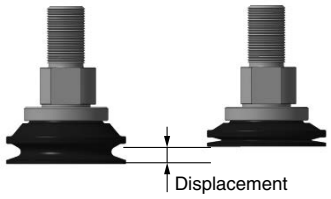

The data shown below are only for reference and are not guaranteed. These values depend on the operating environment, workpiece mass and transfer method. Therefore, thorough research and confirmation are necessary before use.

NBR (N): ——— Silicone rubber (S): ····· Urethane rubber (U): – – – – – FKM (F): —·—·— Mark-free NBR (CL):—··—··

ZP3E-32BM□

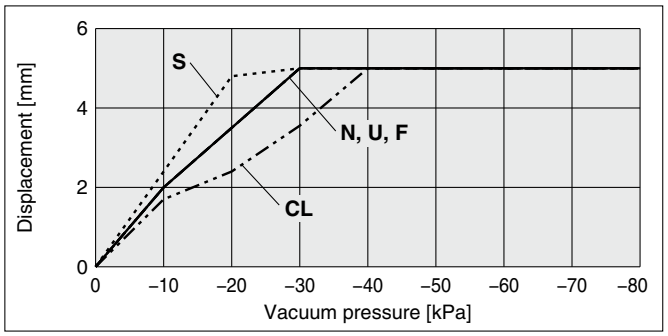

ZP3E-80BM□

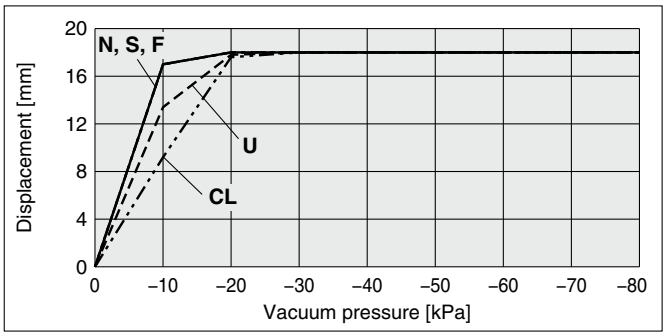

ZP3E-40BM□

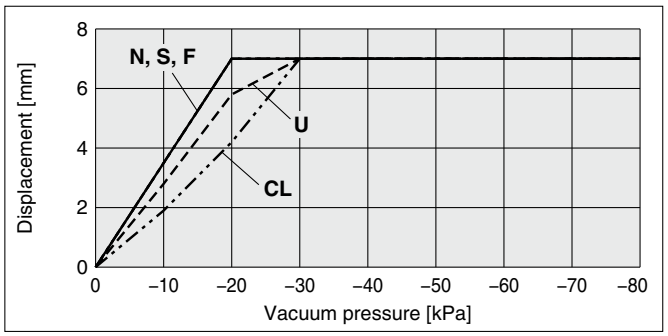

ZP3E-100BM□

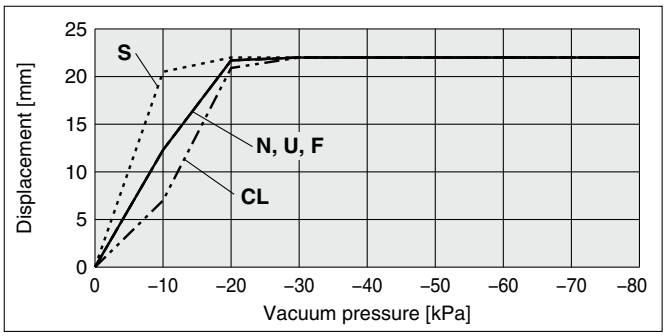

ZP3E-50BM□

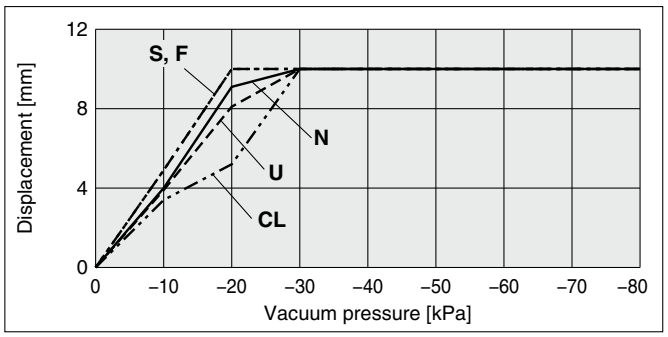

ZP3E-125BM□

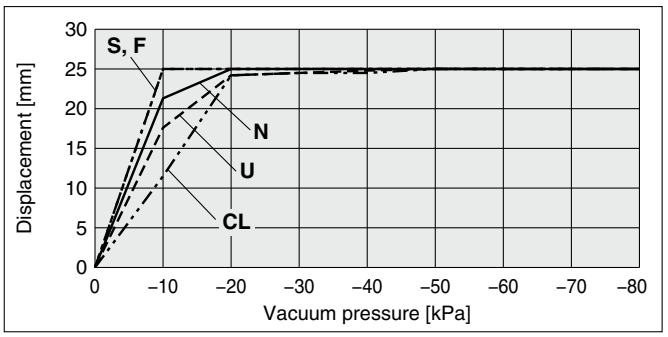

ZP3E-63BM□

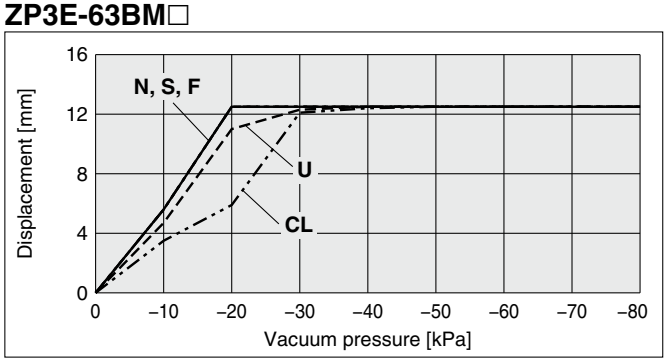

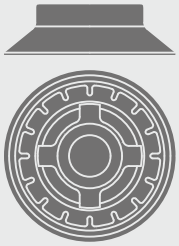

High Rigidity Pad
Flat Type with Groove
ZP3E Series



How to Order

		Dimensions/ Models	Construction	Mounting Bracket Assembly
Pad unit	ZP3E− 32 UM N − P (7)	p. 209	p. 233	From p. 237
With adapter	ZP3E − T 32 UM N − A10 (6)	From p. 209	From p. 233	From p. 237
With buffer	ZP3E − T 32 UM N JB 10 (1 2 3 4 5)	From p. 212	p. 234	p. 240

● Flat type with groove

❶ Vacuum inlet direction

Nil	Pad unit
T	Vertical
Y	Lateral

❷ Pad diameter

32	ø32
40	ø40
50	ø50
63	ø63
80	ø80
100	ø100
125	ø125

❸ Material

N	NBR
S	Silicone rubber*1
U	Urethane rubber
F	FKM
CL	Mark-free NBR

*1 Compliant with the FDA (USA Food and Drug Administration) regulation 21CFR§177.2600 for "Rubber articles intended for repeated use"

❹ Buffer specification

JB	Rotating, With bushing

❺ Buffer stroke

Stroke [mm]	Pad diameter: All sizes
10	●
30	●
50	●

❻ Connection thread

○: ZP3E-T/Vertical ●: ZP3E-Y/Lateral

❻ Connection thread			Vacuum inlet		Pad diameter [mm]	
Type	Symbol	Size	Type	Size	ø32 to ø50	ø63 to ø125
Male thread	**A10**	M10 x 1	Use the connection thread.		○	—
	A16	M16 x 1.5			—	○
Female thread	**B8**	M8 x 1.25			○	—
	B10	M10 x 1.5			○	—
	B12	M12 x 1.75			—	○
	B18	M18 x 1.5			—	○
Male thread	**AL14**	M14 x 1	Female thread	Rc1/8	○	—
				M5 x 0.8	●	—
	AL16	M16 x 1.5		Rc1/8	—	○●
Female thread	**B8**	M8 x 1.25		M5 x 0.8	●	—
	B12	M12 x 1.75		Rc1/8	—	●

❼ Plate

Nil	Without plate
P	With plate

Dimensions/Models

Single unit ø32 to ø125

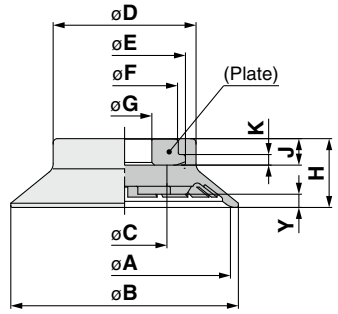

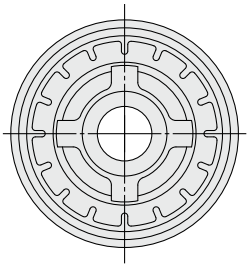

ZP3E – 32 UM N – P
❶ ❷ ❸

❸ **Plate**

Nil	Without plate
P	With plate

Model ❶ Pad dia.	Form	❷ *1 Material	❸ Plate	A	B	C	D	E	F	G	H	J	K	Y
ZP3E **32**	**UM**	**N S U F CL**	**Nil P**	32	35	16	27	23	20	10.3	13	5	2	2
40				40	43									2.5
50				50	53		36	31	27		13.5			3
63				63	66	24	45	39	34	16.3	19.5	8	3	5
80				80	83									
100				100	103		56	49.5	43		22			7
125				125	128		73	65	58					

*1 N: NBR, S: Silicone rubber, U: Urethane rubber, F: FKM, CL: Mark-free NBR

Construction	p. 233
Mounting Bracket Assembly	From p. 237

With adapter ø32 to ø125

ZP3E – T 32 UM N – A10
❶ ❷ ❸

❸ **Connection thread (Male thread)**

A10	M10 x 1
A16	M16 x 1.5

Vacuum inlet direction Vertical

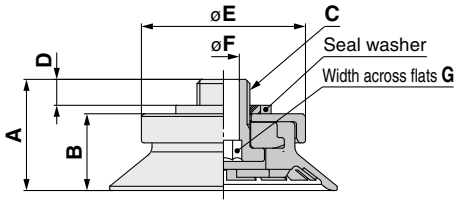

Construction	p. 233
Adapter Assembly	p. 237

Model Vacuum inlet direction	❶ Pad dia.	Form	❷ *1 Material	❸ Connection thread	A	B	C	D	E	F	G
ZP3E **T**	**32 40**	**UM**	**N S U F CL**	**A10**	21	14.5	M10 x 1	4.9	31	6	6
	50				21.5	15			40		
	63 80			**A16**	30.5	21.1	M16 x 1.5	7.4	48.9	10	10
	100				33	23.6			60.1		
	125								77.8		

*1 N: NBR, S: Silicone rubber, U: Urethane rubber, F: FKM, CL: Mark-free NBR

Dimensions/Models

With adapter ø32 to ø125

ZP3E – T 32 UM N – B8
❶ ❷ ❸

❸ **Connection thread (Female thread)**

B8	M8 x 1.25
B10	M10 x 1.5
B12	M12 x 1.75
B18	M18 x 1.5

Vacuum inlet direction Vertical

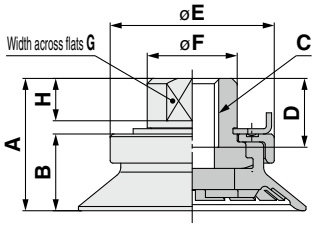

Construction	p. 233
Adapter Assembly	p. 238

Model						A	B	C	D	E	F	G	H
	Vacuum inlet direction	❶ Pad dia.	Form	❷ *1 Material	❸ Connection thread								
ZP3E	T	32 40	UM	N S U F CL	B8	25	14.5	M8 x 1.25	9.5	31	17	14	8
		50				25.5	15			40			
		32 40			B10	25	14.5	M10 x 1.5	13	31			
		50				25.5	15			40			
		63 80			B12	36	21.5	M12 x 1.75	12	50	32	24	12
		100				38.5	24			61			
		125								78.6			
		63 80			B18	36	21.5	M18 x 1.5	18	50			
		100				38.5	24			61			
		125								78.6			

*1 N: NBR, S: Silicone rubber, U: Urethane rubber, F: FKM, CL: Mark-free NBR

ZP3E – T 32 UM N – AL14
❶ ❷ ❸

❸ **Connection thread (Male thread)**

AL14	M14 x 1
AL16	M16 x 1.5

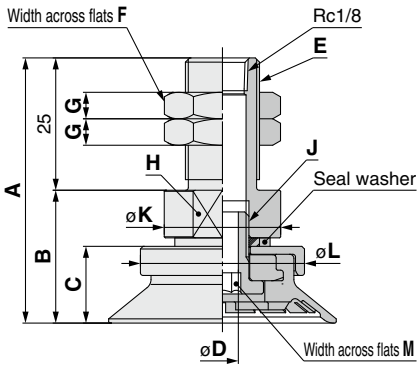

Construction	p. 233
Adapter Assembly	p. 237

Model						A	B	C	D	E	F	G	H	J	K	L	M
	Vacuum inlet direction	❶ Pad dia.	Form	❷ *1 Material	❸ Connection thread												
ZP3E	T	32 40	UM	N S U F CL	AL14	50.1	25.1	14.5	6	M14 x 1	19	5	Width across flats 19	M10 x 1	22	31	6
		50				50.6	25.6	15								40	
		63 80			AL16	63.1	38.1	21.1	10	M16 x 1.5	22	6	Width across flats 24	M16 x 1.5		48.9	10
		100				65.6	40.6	23.6								60.1	
		125														77.8	

*1 N: NBR, S: Silicone rubber, U: Urethane rubber, F: FKM, CL: Mark-free NBR

Dimensions/Models

With adapter ø32 to ø125

ZP3E – Y 32 UM N – AL14
❶ ❷ ❸ Connection thread (Male thread)

AL14	M14 x 1
AL16	M16 x 1.5

Vacuum inlet direction Lateral

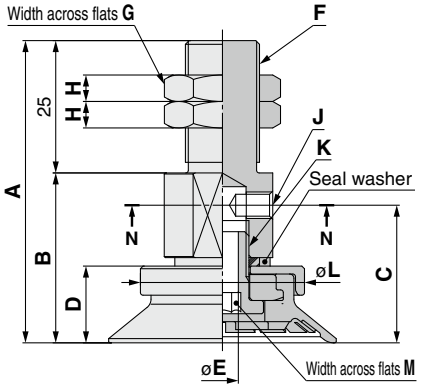

N-N (ø32 to ø50)

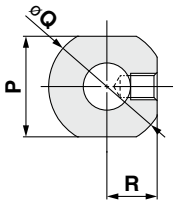

N-N (ø63 to ø125)

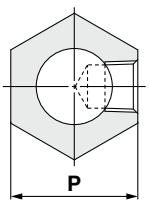

Construction	p. 233
Adapter Assembly	p. 239

Model						A	B	C	D	E	F	G	H	J	K	L	M	P	Q	R
	Vacuum inlet direction	❶ Pad dia.	Form	❷ *1 Material	❸ Connection thread															
ZP3E	Y	32 40 50	UM	N S U F CL	AL14	57.1 57.6	32.1 32.6	26 26.5	14.5 15	6	M14 x 1	19	5	M5 x 0.8/ Effective thread depth 5	M10 x 1	31 40	6	Width across flats 19	22	9.5
		63 80 100 125			AL16	72.6 75.1	47.6 50.1	37.6 40.1	21.1 23.6	10	M16 x 1.5	22	6	Rc1/8	M16 x 1.5	48.9 60.1 77.8	10	Width across flats 24		

*1 N: NBR, S: Silicone rubber, U: Urethane rubber, F: FKM, CL: Mark-free NBR

ZP3E – Y 32 UM N – B8
❶ ❷ ❸ Connection thread (Female thread)

B8	M8 x 1.25
B12	M12 x 1.75

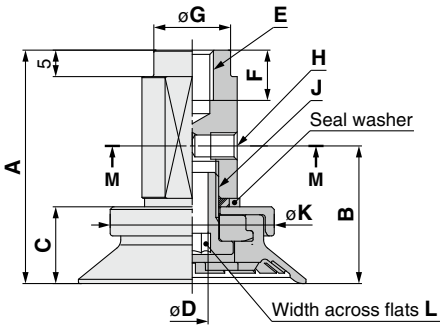

M-M

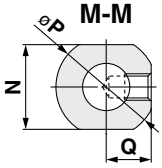

Construction	p. 234
Adapter Assembly	p. 239

Model						A	B	C	D	E	F	G	H	J	K	L	N	P	Q
	Vacuum inlet direction	❶ Pad dia.	Form	❷ *1 Material	❸ Connection thread														
ZP3E	Y	32 40 50	UM	N S U F CL	B8	44.1 44.6	26 26.5	14.5 15	6	M8 x 1.25	9.5	14.5	M5 x 0.8/ Effective thread depth 5	M10 x 1	31 40	6	16	19	8.5
		63 80 100 125			B12	61.6 64.1	37.6 40.1	21.1 23.6	10	M12 x 1.75	12	19	Rc1/8	M16 x 1.5	48.9 60.1 77.8	10	24	28	12.5

*1 N: NBR, S: Silicone rubber, U: Urethane rubber, F: FKM, CL: Mark-free NBR

Dimensions/Models

With buffer ø32 to ø125

ZP3E – T 32 UM N JB 10
❶ ❷ ❹

❸ **Buffer specification**

JB	Rotating, With bushing

Vacuum inlet direction Vertical

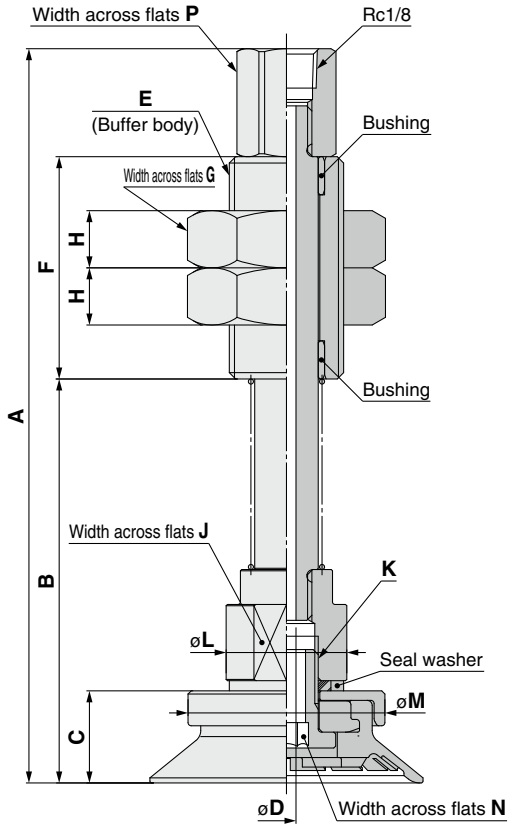

Construction	p. 234
Buffer Assembly	p. 240

Model							A	B	C	D	E	F	G	H	J	K	L	M	N	P
	Vacuum inlet direction	❶ Pad dia.	Form	❷ *1 Material	❸ Buffer spec.	❹ Buffer stroke														
ZP3E	T	32 40	UM	N S U F CL	JB	10	115.6	63.6	14.5	3	M18 x 1.5	35	27	9	16	M10 x 1	19	31	6	14
						30	140.6	88.6												
						50	160.6	108.6												
		50				10	116.1	64.1	15									40		
						30	141.1	89.1												
						50	161.1	109.1												
		63 80				10	151.1	81.1	21.1	4	M22 x 1.5	50	30	8	24	M16 x 1.5	28	48.9	10	17
						30	176.1	106.1												
						50	196.1	126.1												
		100				10	153.6	83.6	23.6									60.1		
						30	178.6	108.6												
						50	198.6	128.6												
		125				10	153.6	83.6										77.8		
						30	178.6	108.6												
						50	198.6	128.6												

*1 N: NBR, S: Silicone rubber, U: Urethane rubber, F: FKM, CL: Mark-free NBR

Dimensions/Models

With buffer ø32 to ø125

ZP3E – Y 32 UM N JB 10
❶ ❷ ❸ ❹

❸ **Buffer specification**

JB	Rotating, With bushing

Vacuum inlet direction **Lateral**

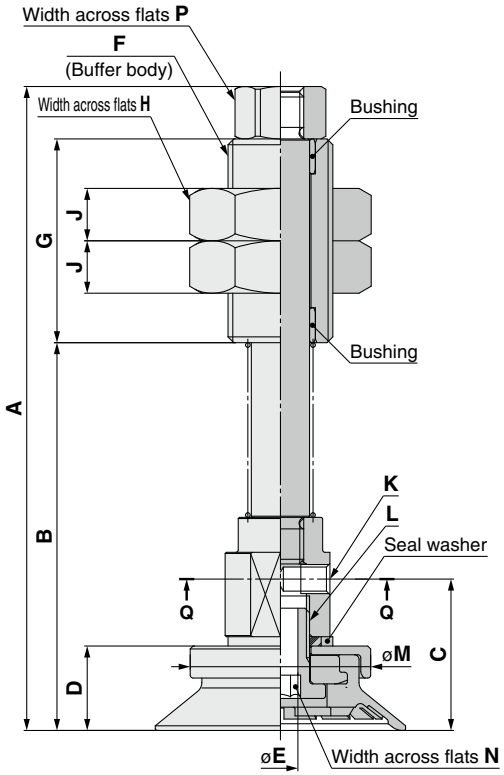

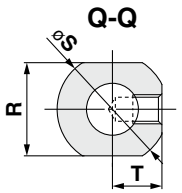

Construction	p. 234
Buffer Assembly	p. 240

Model							A	B	C	D	E	F	G	H	J	K	L	M	N	P	R	S	T
	Vacuum inlet direction	❶ Pad dia.	Form	❷ *1 Material	❸ Buffer spec.	❹ Buffer stroke																	
ZP3E	Y	32 40	UM	N S U F CL	JB	10	110.6	66.6	26	14.5	6	M18 x 1.5	35	27	9	M5 x 0.8/ Effective thread depth 5	M10 x 1	31	6	14	16	19	8.5
						30	135.6	91.6															
						50	155.6	111.6															
		50				10	111.1	67.1	26.5	15								40					
						30	136.1	92.1															
						50	156.1	112.1															
		63 80				10	148.1	88.1	37.6	21.1	10	M22 x 1.5	50	30	8	Rc1/8	M16 x 1.5	48.9	10	17	24	28	12.5
						30	173.1	113.1															
						50	193.1	133.1															
		100				10	150.6	90.6	40.1	23.6								60.1					
						30	175.6	115.6															
						50	195.6	135.6															
		125				10	150.6	90.6										77.8					
						30	175.6	115.6															
						50	195.6	135.6															

*1 N: NBR, S: Silicone rubber, U: Urethane rubber, F: FKM, CL: Mark-free NBR



High Rigidity Pad

Flat Type with Groove Ball Joint Type

ZP3E Series

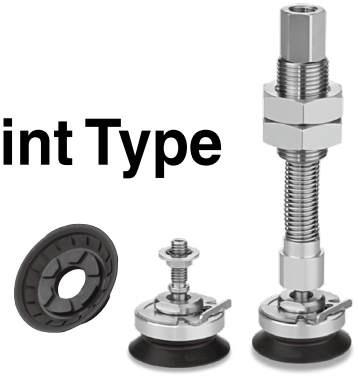

How to Order

		Dimensions/ Models	Construction	Mounting Bracket Assembly
Pad unit	ZP3E− 32 UM N − P ❼	p. 215	p. 235	From p. 241
With adapter	ZP3E− T F 32 UM N − AL6 ❻	From p. 215	From p. 235	From p. 241
With buffer	ZP3E− T F 32 UM N JB 10 ❶ ❷ ❸ ❹ ❺	From p. 218	p. 236	p. 244

Ball joint ● Flat type with groove

❶ Vacuum inlet direction

Nil	Pad unit
T	Vertical
Y	Lateral

❷ Pad diameter

32	ø32
40	ø40
50	ø50
63	ø63
80	ø80
100	ø100
125	ø125

❸ Material

N	NBR
S	Silicone rubber*1
U	Urethane rubber
F	FKM
CL	Mark-free NBR

*1 Compliant with the FDA (USA Food and Drug Administration) regulation 21CFR§177.2600 for "Rubber articles intended for repeated use"

❹ Buffer specification

JB	Rotating, With bushing

❺ Buffer stroke

Stroke [mm]	Pad diameter
	All sizes
10	●
30	●
50	●

❻ Connection thread

○: ZP3E-T/Vertical ●: ZP3E-Y/Lateral

❻ Connection thread			Vacuum inlet		Pad diameter [mm]	
Type	Symbol	Size	Type	Size	ø32 to ø50	ø63 to ø125
Male thread	**AL6**	M6 x 1	Use the connection thread.		○	—
	AL12	M12 x 1.25			—	○
	AL14	M14 x 1	Female thread	Rc1/8	○	—
				M5 x 0.8	●	—
	AL16	M16 x 1.5		Rc1/8	—	○●
Female thread	**B8**	M8 x 1.25	Use the connection thread.		○	—
	B12	M12 x 1.75			—	○
	B8	M8 x 1.25	Female thread	M5 x 0.8	●	—
	B12	M12 x 1.75		Rc1/8	—	●

❼ Plate

Nil	Without plate
P	With plate

Dimensions/Models

Single unit ø32 to ø125

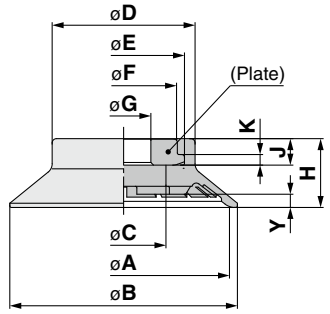

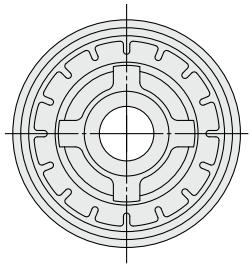

ZP3E – 32 UM N – P
❶ ❷ ❸

❸ **Plate**

Nil	Without plate
P	With plate

Model ❶ Pad dia.	Form	❷ *1 Material	❸ Plate	A	B	C	D	E	F	G	H	J	K	Y
ZP3E **32**	**UM**	**N S U F CL**	**Nil P**	32	35	16	27	23	20	10.3	13	5	2	2
40				40	43									2.5
50				50	53		36	31	27		13.5			3
63				63	66	24	45	39	34	16.3	19.5	8	3	5
80				80	83									
100				100	103		56	49.5	43		22			7
125				125	128		73	65	58					

*1 N: NBR, S: Silicone rubber, U: Urethane rubber, F: FKM, CL: Mark-free NBR

Construction	p. 235
Mounting Bracket Assembly	From p. 241

With adapter ø32 to ø125

ZP3E – T F 32 UM N – AL6
❶ ❷ ❸

❸ **Connection thread (Male thread)**

AL6	M6 x 1
AL12	M12 x 1.25

Vacuum inlet direction Vertical

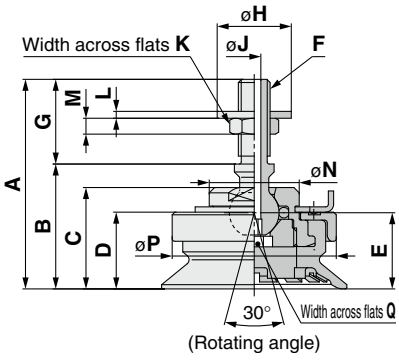

Model Vacuum inlet direction	❶ Pad dia.	Form	❷ *1 Material	❸ Connection thread	A	B	C	D	E	F	G	H	J	K	L	M	N	P	Q
ZP3E **TF**	**32 40**	**UM**	**N S U F CL**	**AL6**	39.6	23.6	19.2	14.5	14.4	M6 x 1	16	14	2.5	8	1.3	3	17	31	2.5
	50				40.1	24.1	19.7	15	14.9									40	
	63 80			**AL12**	56.5	36.5	30.5	21.5	22.6	M12 x 1.25	20	24.3	4	19	2	7	32	50	4
	100				59	39	33	24	25.1									61	
	125																	78.6	

*1 N: NBR, S: Silicone rubber, U: Urethane rubber, F: FKM, CL: Mark-free NBR

Construction	p. 235
Adapter Assembly	p. 241

Dimensions/Models

With adapter ø32 to ø125

ZP3E – T F 32 UM N – B8
❶ ❷ ❸

❸ **Connection thread (Female thread)**

B8	M8 x 1.25
B12	M12 x 1.75

Vacuum inlet direction Vertical

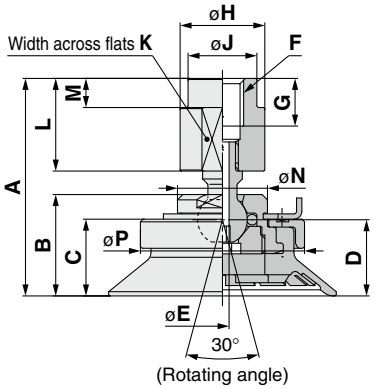

Construction	p. 235
Adapter Assembly	p. 242

Model						A	B	C	D	E	F	G	H	J	K	L	M	N	P
	Vacuum inlet direction	❶ Pad dia.	Form	❷ *1 Material	❸ Connection thread														
ZP3E	TF	32	UM	N S U F CL	B8	41.1	19.2	14.5	14.4	2.5	M8 x 1.25	9	16	13	14	17.5	5.5	17	31
		40				41.6	19.7	15	14.9										40
		50			B12	63.5	30.5	21.5	22.6	4	M12 x 1.75	11	26	18	22	27	6	32	50
		63																	
		80				66	33	24	25.1										61
		100																	
		125																	78.6

*1 N: NBR, S: Silicone rubber, U: Urethane rubber, F: FKM, CL: Mark-free NBR

ZP3E – T F 32 UM N – AL14
❶ ❷ ❸

❸ **Connection thread (Male thread)**

AL14	M14 x 1
AL16	M16 x 1.5

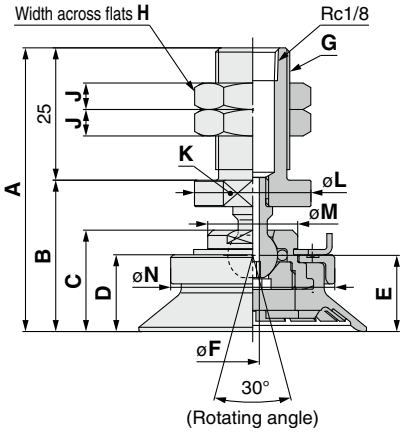

Construction	p. 235
Adapter Assembly	p. 242

Model						A	B	C	D	E	F	G	H	J	K	L	M	N
	Vacuum inlet direction	❶ Pad dia.	Form	❷ *1 Material	❸ Connection thread													
ZP3E	TF	32	UM	N S U F CL	AL14	53.6	28.6	19.2	14.5	14.4	2.5	M14 x 1	19	5	Width across flats 19	22	17	31
		40				54.1	29.1	19.7	15	14.9								40
		50			AL16	66.5	41.5	30.5	21.5	22.6	4	M16 x 1.5	22	6	Width across flats 24		32	50
		63																
		80				69	44	33	24	25.1								61
		100																
		125																78.6

*1 N: NBR, S: Silicone rubber, U: Urethane rubber, F: FKM, CL: Mark-free NBR

Dimensions/Models

With adapter ø32 to ø125

ZP3E – Y F 32 UM N – AL14
❶ ❷ ❸ Connection thread (Male thread)

AL14	M14 x 1
AL16	M16 x 1.5

Vacuum inlet direction Lateral

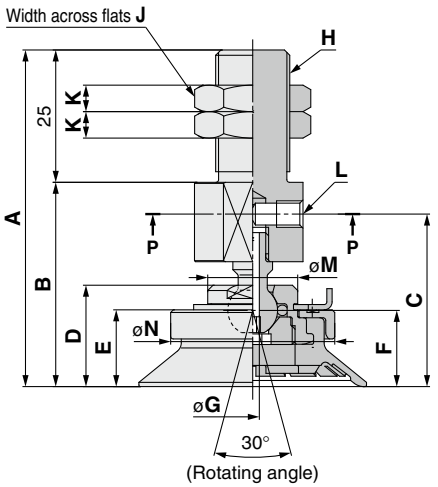

P-P (ø32 to ø50)

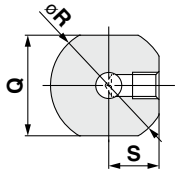

P-P (ø63 to ø125)

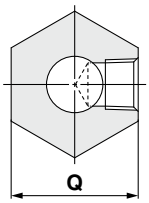

Model						A	B	C	D	E	F	G	H	J	K	L	M	N	Q	R	S
	Vacuum inlet direction	❶ Pad dia.	Form	❷ *1 Material	❸ Connection thread																
ZP3E	YF	32	UM	N S U F CL	AL14	63.6	38.6	32.6	19.2	14.5	14.4	2.5	M14 x 1	19	5	M5 x 0.8/ Effective thread depth 5	17	31	19	22	9.5
		40				64.1	39.1	33.1	19.7	15	14.9							40			
		50				88.5	63.5	53.5	30.5	21.5	22.6	4	M16 x 1.5	22	6	Rc1/8	32	50	24		
		63			AL16													61			
		80																			
		100				91	66	56	33	24	25.1							78.6			
		125																			

*1 N: NBR, S: Silicone rubber, U: Urethane rubber, F: FKM, CL: Mark-free NBR

Construction	p. 235
Adapter Assembly	p. 243

ZP3E – Y F 32 UM N – B8
❶ ❷ ❸ Connection thread (Female thread)

B8	M8 x 1.25
B12	M12 x 1.75

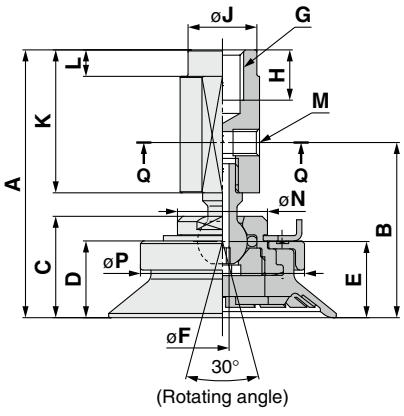

Q-Q

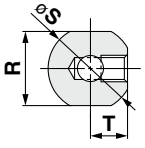

Model						A	B	C	D	E	F	G	H	J	K	L	M	N	P	R	S	T
	Vacuum inlet direction	❶ Pad dia.	Form	❷ *1 Material	❸ Connection thread																	
ZP3E	YF	32	UM	N S U F CL	B8	50.6	33.1	19.2	14.5	14.4	2.5	M8 x 1.25	9.5	13	27	5	M5 x 0.8/ Effective thread depth 5	17	31	14	16	7
		40				51.1	33.6	19.7	15	14.9									40			
		50			B12	76.5	53.5	30.5	21.5	22.6	4	M12 x 1.75	11.5	18	40	6	Rc1/8	32	50	22	26	11
		63																	61			
		80																				
		100				79	56	33	24	25.1									78.6			
		125																				

*1 N: NBR, S: Silicone rubber, U: Urethane rubber, F: FKM, CL: Mark-free NBR

Construction	p. 236
Adapter Assembly	p. 243

Dimensions/Models

With buffer ø32 to ø125

ZP3E – T F 32 UM N JB 10
❶ ❷ ❹

❸ **Buffer specification**

JB	Rotating, With bushing

Vacuum inlet direction Vertical

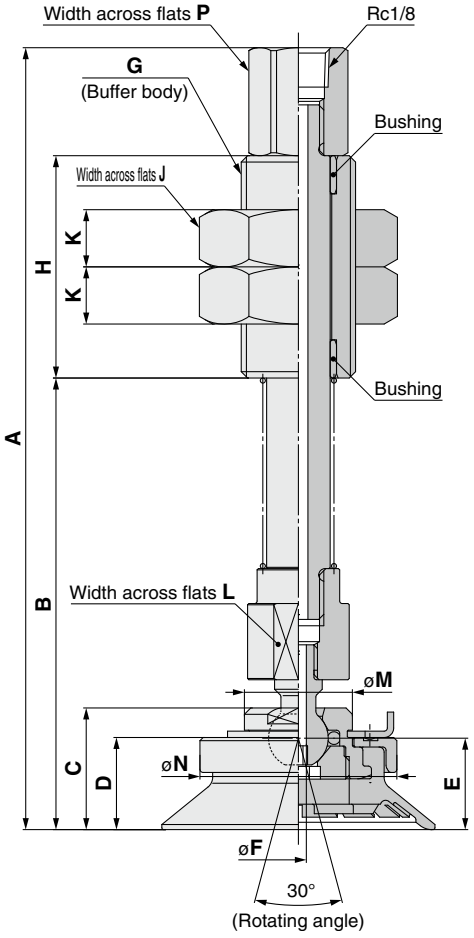

Construction	p. 236
Buffer Assembly	p. 244

Model							A	B	C	D	E	F	G	H	J	K	L	M	N	P
	Vacuum inlet direction	❶ Pad dia.	Form	❷ *1 Material	❸ Buffer spec.	❹ Buffer stroke														
ZP3E	TF	32 40	UM	N S U F CL	JB	10	123.1	71.1	19.2	14.5	14.4	2.5	M18 x 1.5	35	27	9	14	17	31	14
						30	148.1	96.1												
						50	168.1	116.1												
		50				10	123.6	71.6	19.7	15	14.9								40	
						30	148.6	96.6												
						50	168.6	116.6												
		63 80				10	168.5	98.5	30.5	21.5	22.6	4	M22 x 1.5	50	30	8	22	32	50	17
						30	193.5	123.5												
						50	213.5	143.5												
		100				10	171	101	33	24	25.1								61	
						30	196	126												
						50	216	146												
		125				10	171	101											78.6	
						30	196	126												
						50	216	146												

*1 N: NBR, S: Silicone rubber, U: Urethane rubber, F: FKM, CL: Mark-free NBR

Dimensions/Models

With buffer ø32 to ø125

ZP3E – Y F 32 UM N JB 10
❶ ❷ ❹

❸ **Buffer specification**

JB	Rotating, With bushing

Vacuum inlet direction **Lateral**

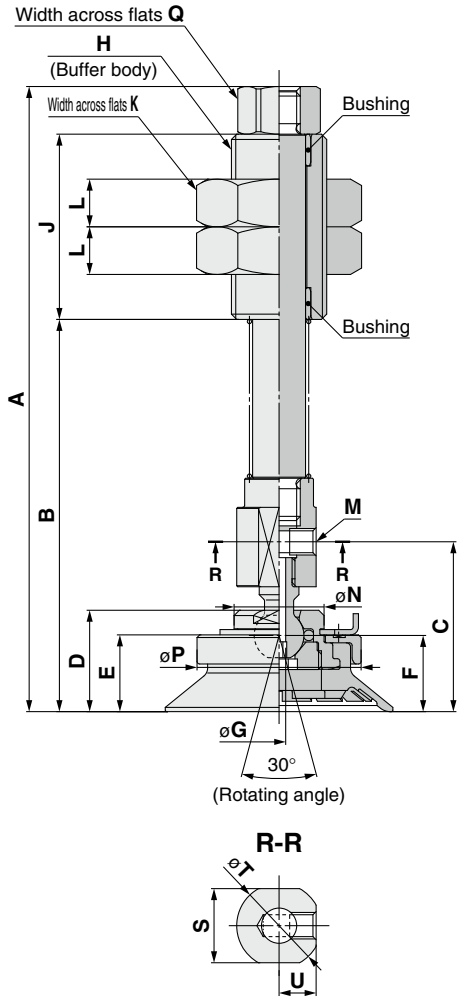

Construction	p. 236
Buffer Assembly	p. 244

Model							A	B	C	D	E	F	G	H	J	K	L	M	N	P	Q	S	T	U
	Vacuum inlet direction	❶ Pad dia.	Form	❷ *1 Material	❸ Buffer spec.	❹ Buffer stroke																		
ZP3E	YF	32 40	UM	N S U F CL	JB	10	118.1	74.1	32.1	19.2	14.5	14.4	2.5	M18 x 1.5	35	27	9	M5 x 0.8/ Effective thread depth 5	17	31	14	14	16	7
						30	143.1	99.1																
						50	163.1	119.1																
		50				10	118.6	74.6	32.6	19.7	15	14.9								40				
						30	143.6	99.6																
						50	163.6	119.6																
		63 80				10	165	105	53.5	30.5	21.5	22.6	4	M22 x 1.5	50	30	8	Rc1/8	32	50	17	22	26	11
						30	190	130																
						50	210	150																
		100				10	167.5	107.5	56	33	24	25.1								61				
						30	192.5	132.5																
						50	212.5	152.5																
		125				10	167.5	107.5												78.6				
						30	192.5	132.5																
						50	212.5	152.5																

*1 N: NBR, S: Silicone rubber, U: Urethane rubber, F: FKM, CL: Mark-free NBR

High Rigidity Pad

Bellows Type with Ribs and Groove

ZP3E Series



How to Order

		Dimensions/ Models	Construction	Mounting Bracket Assembly
Pad unit	ZP3E− 32 BM N − P (7)	p. 221	p. 233	From p. 237
With adapter	ZP3E− T 32 BM N − A10 (6)	From p. 221	From p. 233	From p. 237
With buffer	ZP3E− T (1) 32 (2) BM N (3) JB (4) 10 (5)	From p. 224	p. 234	p. 240

● Bellows type with ribs and groove

❶ Vacuum inlet direction

Nil	Pad unit
T	Vertical
Y	Lateral

❷ Pad diameter

32	ø32
40	ø40
50	ø50
63	ø63
80	ø80
100	ø100
125	ø125

❸ Material

N	NBR
S	Silicone rubber*1
U	Urethane rubber
F	FKM
CL	Mark-free NBR

*1 Compliant with the FDA (USA Food and Drug Administration) regulation 21CFR§177.2600 for "Rubber articles intended for repeated use"

❹ Buffer specification

JB	Rotating, With bushing

❺ Buffer stroke

Stroke [mm]	Pad diameter
	All sizes
10	●
30	●
50	●

❻ Connection thread

○: ZP3E-T/Vertical ●: ZP3E-Y/Lateral

❻ Connection thread			Vacuum inlet		Pad diameter [mm]	
Type	Symbol	Size	Type	Size	ø32 to ø50	ø63 to ø125
Male thread	A10	M10 x 1	Use the connection thread.		○	—
	A16	M16 x 1.5			—	○
Female thread	B8	M8 x 1.25			○	—
	B10	M10 x 1.5			○	—
	B12	M12 x 1.75			—	○
	B18	M18 x 1.5			—	○
Male thread	AL14	M14 x 1	Female thread	Rc1/8	○	—
				M5 x 0.8	●	—
	AL16	M16 x 1.5		Rc1/8	—	○●
Female thread	B8	M8 x 1.25		M5 x 0.8	●	—
	B12	M12 x 1.75		Rc1/8	—	●

❼ Plate

Nil	Without plate
P	With plate

Dimensions/Models

Single unit ø32 to ø125

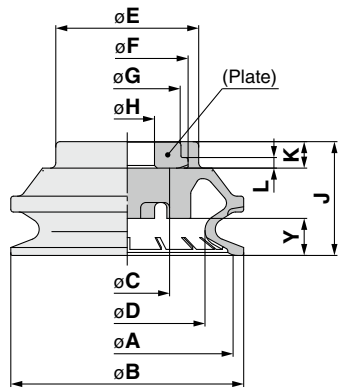

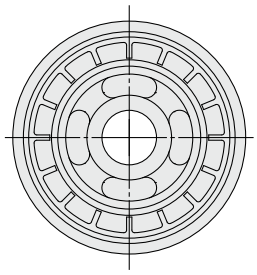

ZP3E – 32 BM N – P
❶ ❷ ❸

❸ **Plate**

Nil	Without plate
P	With plate

	Model				A	B	C	D	E	F	G	H	J	K	L	Y
	❶ Pad dia.	Form	❷ *1 Material	❸ Plate												
ZP3E	**32**	**BM**	**N S U F CL**	**Nil P**	32	35	16	23.3	27	23	20	10.3	19.5	5	2	5
	40				40	44		29.4					21.5			7
	50				50	54		37	36	31	27		25			10
	63				63	68	24	45.8	45	39	34	16.3	33	8	3	12.5
	80				80	85		57	56	49.5	43		41			18
	100				100	106		71.5	73	65	58		50.5			22
	125				125	133		90.3	88	80	71		60			25

*1 N: NBR, S: Silicone rubber, U: Urethane rubber, F: FKM, CL: Mark-free NBR

Construction	p. 233
Mounting Bracket Assembly	From p. 237

With adapter ø32 to ø125

ZP3E – T 32 BM N – A10
❶ ❷ ❸

❸ **Connection thread (Male thread)**

A10	M10 x 1
A16	M16 x 1.5

Vacuum inlet direction Vertical

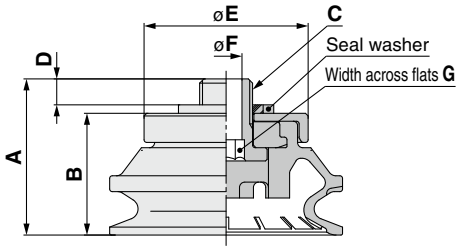

	Model					A	B	C	D	E	F	G
	Vacuum inlet direction	❶ Pad dia.	Form	❷ *1 Material	❸ Connection thread							
ZP3E	**T**	**32**	**BM**	**N S U F CL**	**A10**	27.5	21	M10 x 1	4.9	31	6	6
		40				29.5	23					
		50				33	26.5			40		
		63			**A16**	44	34.6	M16 x 1.5	7.4	48.9	10	10
		80				52	42.6			60.1		
		100				61.5	52.1			77.8		
		125				71	61.6			93		

*1 N: NBR, S: Silicone rubber, U: Urethane rubber, F: FKM, CL: Mark-free NBR

Construction	p. 233
Adapter Assembly	p. 237

Dimensions/Models

With adapter ø32 to ø125

ZP3E – T 32 BM N – B8
❶ ❷ ❸

❸ **Connection thread (Female thread)**

B8	M8 x 1.25
B10	M10 x 1.5
B12	M12 x 1.75
B18	M18 x 1.5

Vacuum inlet direction Vertical

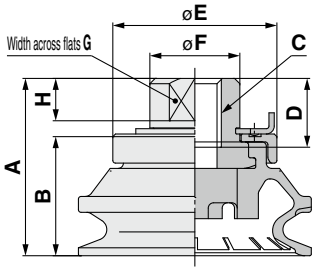

Construction	p. 233
Adapter Assembly	p. 238

Model						A	B	C	D	E	F	G	H
	Vacuum inlet direction	❶ Pad dia.	Form	❷ *1 Material	❸ Connection thread								
ZP3E	T	32	BM	N S U F CL	B8	31.5	21	M8 x 1.25	9.5	31	17	14	8
		40				33.5	23			40			
		50				37	26.5						
		32			B10	31.5	21	M10 x 1.5	13	31			
		40				33.5	23			40			
		50				37	26.5						
		63			B12	49.5	35	M12 x 1.75	12	50	32	24	12
		80				57.5	43			61			
		100				67	52.5			78.6			
		125				76.5	62			93.8			
		63			B18	49.5	35	M18 x 1.5	18	50			
		80				57.5	43			61			
		100				67	52.5			78.6			
		125				76.5	62			93.8			

*1 N: NBR, S: Silicone rubber, U: Urethane rubber, F: FKM, CL: Mark-free NBR

ZP3E – T 32 BM N – AL14
❶ ❷ ❸

❸ **Connection thread (Male thread)**

AL14	M14 x 1
AL16	M16 x 1.5

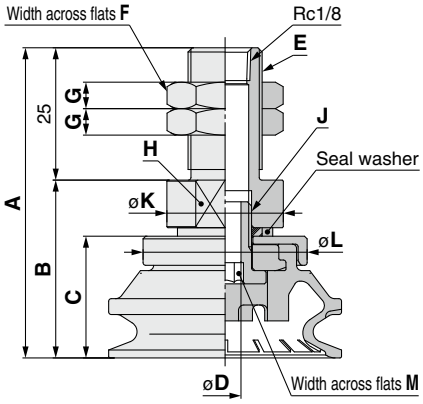

Construction	p. 233
Adapter Assembly	p. 237

Model						A	B	C	D	E	F	G	H	J	K	L	M
	Vacuum inlet direction	❶ Pad dia.	Form	❷ *1 Material	❸ Connection thread												
ZP3E	T	32	BM	N S U F CL	AL14	56.6	31.6	21	6	M14 x 1	19	5	Width across flats 19	M10 x 1	22	31	6
		40				58.6	33.6	23								40	
		50				62.1	37.1	26.5									
		63			AL16	76.6	51.6	34.6	10	M16 x 1.5	22	6	Width across flats 24	M16 x 1.5		48.9	10
		80				84.6	59.6	42.6								60.1	
		100				94.1	69.1	52.1								77.8	
		125				103.6	78.6	61.6								93	

*1 N: NBR, S: Silicone rubber, U: Urethane rubber, F: FKM, CL: Mark-free NBR

Dimensions/Models

With adapter ø32 to ø125

Vacuum inlet direction Lateral

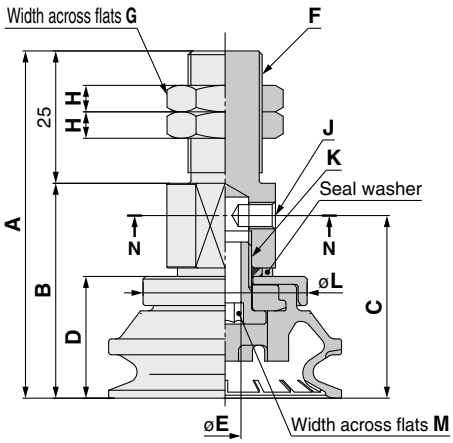

N-N (ø32 to ø50)

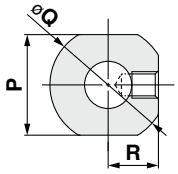

N-N (ø63 to ø125)

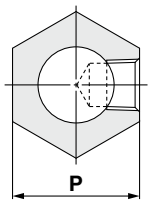

ZP3E – Y 32 BM N – AL14
❶ ❷ ❸

❸ **Connection thread (Male thread)**

AL14	M14 x 1
AL16	M16 x 1.5

Model						A	B	C	D	E	F	G	H	J	K	L	M	P	Q	R
	Vacuum inlet direction	❶ Pad dia.	Form	❷ *1 Material	❸ Connection thread															
ZP3E	Y	32	BM	N S U F CL	AL14	63.6	38.6	32.5	21	6	M14 x 1	19	5	M5 x 0.8/ Effective thread depth 5	M10 x 1	31	6	Width across flats 19	22	9.5
		40				65.6	40.6	34.5	23							40				
		50				69.1	44.1	38	26.5											
		63			AL16	86.1	61.1	51.1	34.6	10	M16 x 1.5	22	6	Rc1/8	M16 x 1.5	48.9	10	Width across flats 24		
		80				94.1	69.1	59.1	42.6							60.1				
		100				103.6	78.6	68.6	52.1							77.8				
		125				113.1	88.1	78.1	61.6							93				

*1 N: NBR, S: Silicone rubber, U: Urethane rubber, F: FKM, CL: Mark-free NBR

Construction	p. 233
Adapter Assembly	p. 239

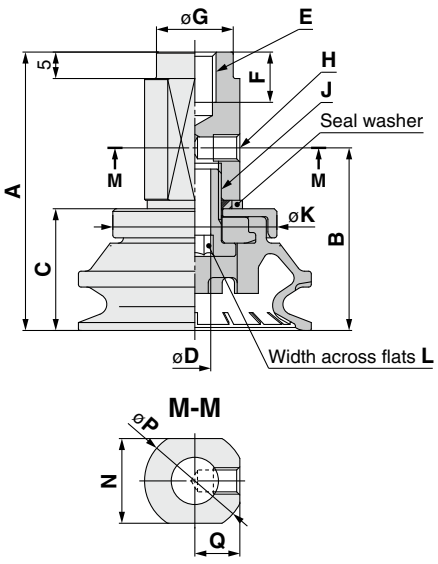

M-M

ZP3E – Y 32 BM N – B8
❶ ❷ ❸

❸ **Connection thread (Female thread)**

B8	M8 x 1.25
B12	M12 x 1.75

Model						A	B	C	D	E	F	G	H	J	K	L	N	P	Q
	Vacuum inlet direction	❶ Pad dia.	Form	❷ *1 Material	❸ Connection thread														
ZP3E	Y	32	BM	N S U F CL	B8	50.6	32.5	21	6	M8 x 1.25	9.5	14.5	M5 x 0.8/ Effective thread depth 5	M10 x 1	31	6	16	19	8.5
		40				52.6	34.5	23											
		50				56.1	38	26.5							40				
		63			B12	75.1	51.1	34.6	10	M12 x 1.75	12	19	Rc1/8	M16 x 1.5	48.9	10	24	28	12.5
		80				83.1	59.1	42.6							60.1				
		100				92.6	68.6	52.1							77.8				
		125				102.1	78.1	61.6							93				

*1 N: NBR, S: Silicone rubber, U: Urethane rubber, F: FKM, CL: Mark-free NBR

Construction	p. 234
Adapter Assembly	p. 239

Dimensions/Models

With buffer ø32 to ø125

ZP3E – T 32 BM N JB 10
❶ ❷ ❸ ❹

❸ **Buffer specification**

JB	Rotating, With bushing

Vacuum inlet direction Vertical

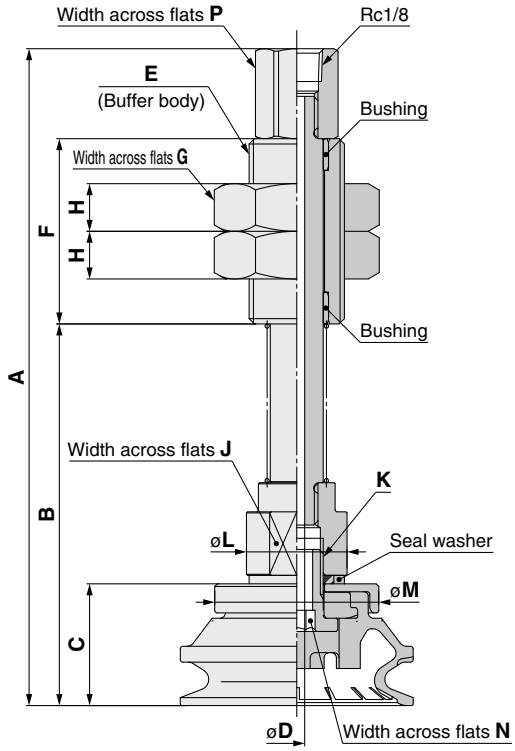

Construction	p. 234
Buffer Assembly	p. 240

Model							A	B	C	D	E	F	G	H	J	K	L	M	N	P
	Vacuum inlet direction	❶ Pad dia.	Form	❷ *1 Material	❸ Buffer spec.	❹ Buffer stroke														
ZP3E	T	32	BM	N S U F CL	JB	10	122.1	70.1	21	3	M18 x 1.5	35	27	9	16	M10 x 1	19	31	6	14
						30	147.1	95.1												
						50	167.1	115.1												
		40				10	124.1	72.1	23											
						30	149.1	97.1												
						50	169.1	117.1												
		50				10	127.6	75.6	26.5									40		
						30	152.6	100.6												
						50	172.6	120.6												
		63				10	164.6	94.6	34.6	4	M22 x 1.5	50	30	8	24	M16 x 1.5	28	48.9	10	17
						30	189.6	119.6												
						50	209.6	139.6												
		80				10	172.6	102.6	42.6									60.1		
						30	197.6	127.6												
						50	217.6	147.6												
		100				10	182.1	112.1	52.1									77.8		
						30	207.1	137.1												
						50	227.1	157.1												
		125				10	191.6	121.6	61.6									93		
						30	216.6	146.6												
						50	236.6	166.6												

*1 N: NBR, S: Silicone rubber, U: Urethane rubber, F: FKM, CL: Mark-free NBR

Dimensions/Models

With buffer ø32 to ø125

ZP3E – Y 32 BM N JB 10
❶ ❷ ❸ ❹

❸ **Buffer specification**

JB	Rotating, With bushing

Vacuum inlet direction **Lateral**

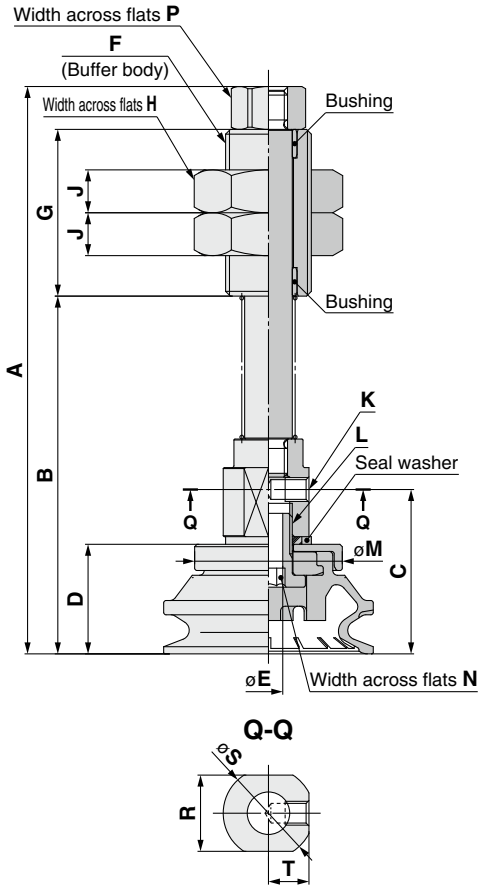

Construction	p. 234
Buffer Assembly	p. 240

Model							A	B	C	D	E	F	G	H	J	K	L	M	N	P	R	S	T
	Vacuum inlet direction	❶ Pad dia.	Form	❷ *1 Material	❸ Buffer spec.	❹ Buffer stroke																	
ZP3E	Y	32	BM	N S U F CL	JB	10	117.1	73.1	32.5	21	6	M18 x 1.5	35	27	9	M5 x 0.8/ Effective thread depth 5	M10 x 1	31	6	14	16	19	8.5
						30	142.1	98.1															
						50	162.1	118.1															
		40				10	119.1	75.1	34.5	23													
						30	144.1	100.1															
						50	164.1	120.1															
		50				10	122.6	78.6	38	26.5								40					
						30	147.6	103.6															
						50	167.6	123.6															
		63				10	161.6	101.6	51.1	34.6	10	M22 x 1.5	50	30	8	Rc1/8	M16 x 1.5	48.9	10	17	24	28	12.5
						30	186.6	126.6															
						50	206.6	146.6															
		80				10	169.6	109.6	59.1	42.6								60.1					
						30	194.6	134.6															
						50	214.6	154.6															
		100				10	179.1	119.1	68.6	52.1								77.8					
						30	204.1	144.1															
						50	224.1	164.1															
		125				10	188.6	128.6	78.1	61.6								93					
						30	213.6	153.6															
						50	233.6	173.6															

*1 N: NBR, S: Silicone rubber, U: Urethane rubber, F: FKM, CL: Mark-free NBR



High Rigidity Pad

Bellows Type with Ribs and Groove Ball Joint Type

ZP3E Series

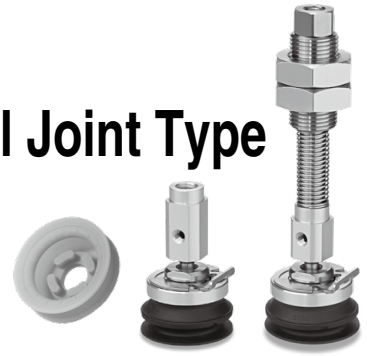

How to Order

		Dimensions/ Models	Construction	Mounting Bracket Assembly
Pad unit	ZP3E – 32 BM N – P (❼)	p. 227	p. 235	From p. 241
With adapter	ZP3E – T F 32 BM N – AL6 (❻)	From p. 227	From p. 235	From p. 241
With buffer	ZP3E – T F 32 BM N JB 10 (❶ ❷ ❸ ❹ ❺)	From p. 231	p. 236	p. 244

Ball joint ● ● Bellows type with ribs and groove

❶ Vacuum inlet direction

Nil	Pad unit
T	Vertical
Y	Lateral

❷ Pad diameter

32	ø32
40	ø40
50	ø50
63	ø63
80	ø80
100	ø100
125	ø125

❸ Material

N	NBR
S	Silicone rubber*1
U	Urethane rubber
F	FKM
CL	Mark-free NBR

*1 Compliant with the FDA (USA Food and Drug Administration) regulation 21CFR§177.2600 for "Rubber articles intended for repeated use"

❹ Buffer specification

JB	Rotating, With bushing

❺ Buffer stroke

Stroke [mm]	Pad diameter All sizes
10	●
30	●
50	●

❻ Connection thread

○: ZP3E-T/Vertical ●: ZP3E-Y/Lateral

❻ Connection thread			Vacuum inlet		Pad diameter [mm]	
Type	Symbol	Size	Type	Size	ø32 to ø50	ø63 to ø125
Male thread	AL6	M6 x 1	Use the connection thread.		○	—
	AL12	M12 x 1.25			—	○
	AL14	M14 x 1	Female thread	Rc1/8	○	—
				M5 x 0.8	●	—
	AL16	M16 x 1.5		Rc1/8	—	○●
Female thread	B8	M8 x 1.25	Use the connection thread.		○	—
	B12	M12 x 1.75			—	○
	B8	M8 x 1.25	Female thread	M5 x 0.8	●	—
	B12	M12 x 1.75		Rc1/8	—	●

❼ Plate

Nil	Without plate
P	With plate

Dimensions/Models

Single unit ø32 to ø125

ZP3E – 32 BM N – P
❶ ❷ ❸

❸ **Plate**

Nil	Without plate
P	With plate

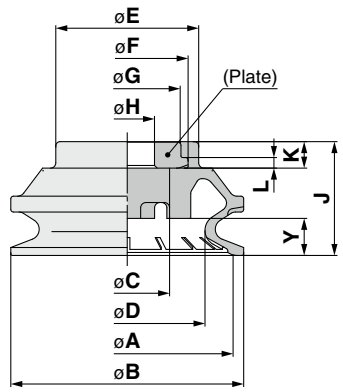

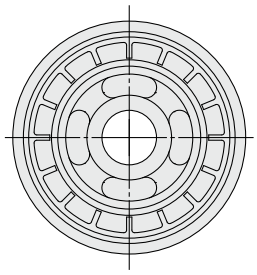

Model					A	B	C	D	E	F	G	H	J	K	L	Y
❶ Pad dia.	Form	❷ *1 Material	❸ Plate													
ZP3E	**32**	**BM**	**N S U F CL**	**Nil P**	32	35	16	23.3	27	23	20	10.3	19.5	5	2	5
	40				40	44		29.4					21.5			7
	50				50	54		37	36	31	27		25			10
	63				63	68	24	45.8	45	39	34	16.3	33	8	3	12.5
	80				80	85		57	56	49.5	43		41			18
	100				100	106		71.5	73	65	58		50.5			22
	125				125	133		90.3	88	80	71		60			25

*1 N: NBR, S: Silicone rubber, U: Urethane rubber, F: FKM, CL: Mark-free NBR

Construction	p. 235
Mounting Bracket Assembly	From p. 241

With adapter ø32 to ø125

ZP3E – T F 32 BM N – AL6
❶ ❷ ❸

❸ **Connection thread (Male thread)**

AL6	M6 x 1
AL12	M12 x 1.25

Vacuum inlet direction Vertical

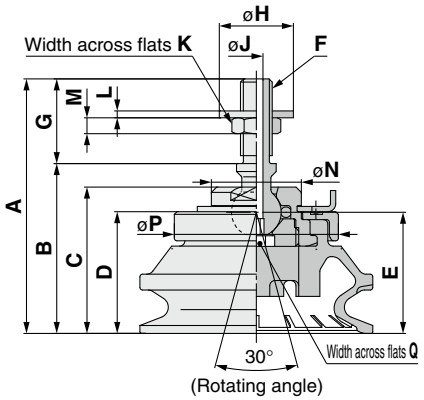

Model						A	B	C	D	E	F	G	H	J	K	L	M	N	P	Q
Vacuum inlet direction	❶ Pad dia.	Form	❷ *1 Material	❸ Connection thread																
ZP3E	TF	**32**	**BM**	**N S U F CL**	**AL6**	46.1	30.1	25.7	21	20.9	M6 x 1	16	14	2.5	8	1.3	3	17	31	2.5
		40				48.1	32.1	27.7	23	22.9										
		50				51.6	35.6	31.2	26.5	26.4									40	
		63			**AL12**	70	50	44	35	36.1	M12 x 1.25	20	24.3	4	19	2	7	32	50	4
		80				78	58	52	43	44.1									61	
		100				87.5	67.5	61.5	52.5	53.6									78.6	
		125				97	77	71	62	63.1									93.8	

*1 N: NBR, S: Silicone rubber, U: Urethane rubber, F: FKM, CL: Mark-free NBR

Construction	p. 235
Adapter Assembly	p. 241

Dimensions/Models

With adapter ø32 to ø125

ZP3E – T F 32 BM N – B8
❶ ❷ ❸

❸ **Connection thread (Female thread)**

B8	M8 x 1.25
B12	M12 x 1.75

Vacuum inlet direction Vertical

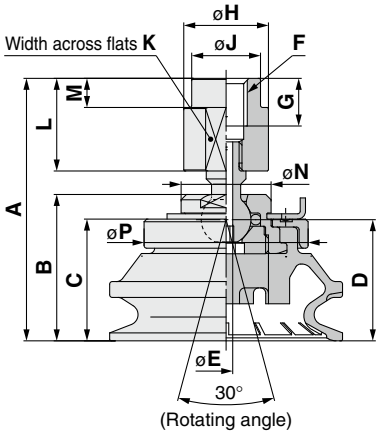

Construction	p. 235
Adapter Assembly	p. 242

Model						A	B	C	D	E	F	G	H	J	K	L	M	N	P
	Vacuum inlet direction	❶ Pad dia.	Form	❷ *1 Material	❸ Connection thread														
ZP3E	TF	32	BM	NSUFCL	B8	47.6	25.7	21	20.9	2.5	M8 x 1.25	9	16	13	14	17.5	5.5	17	31
		40				49.6	27.7	23	22.9										
		50				53.1	31.2	26.5	26.4										40
		63			B12	77	44	35	36.1	4	M12 x 1.75	11	26	18	22	27	6	32	50
		80				85	52	43	44.1										61
		100				94.5	61.5	52.5	53.6										78.6
		125				104	71	62	63.1										93.8

*1 N: NBR, S: Silicone rubber, U: Urethane rubber, F: FKM, CL: Mark-free NBR

ZP3E – T F 32 BM N – AL14
❶ ❷ ❸

❸ **Connection thread (Male thread)**

AL14	M14 x 1
AL16	M16 x 1.5

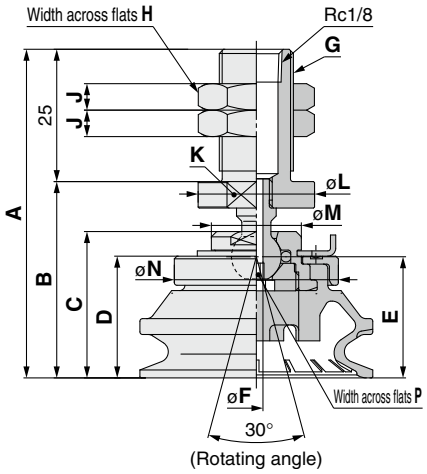

Construction	p. 235
Adapter Assembly	p. 242

Model						A	B	C	D	E	F	G	H	J	K	L	M	N
	Vacuum inlet direction	❶ Pad dia.	Form	❷ *1 Material	❸ Connection thread													
ZP3E	TF	32	BM	NSUFCL	AL14	60.1	35.1	25.7	21	20.9	2.5	M14 x 1	19	5	Width across flats 19	22	17	31
		40				62.1	37.1	27.7	23	22.9								
		50				65.6	40.6	31.2	26.5	26.4								40
		63			AL16	80	55	44	35	36.1	4	M16 x 1.5	22	6	Width across flats 24		32	50
		80				88	63	52	43	44.1								61
		100				97.5	72.5	61.5	52.5	53.6								78.6
		125				107	82	71	62	63.1								93.8

*1 N: NBR, S: Silicone rubber, U: Urethane rubber, F: FKM, CL: Mark-free NBR

Dimensions/Models

With adapter ø32 to ø125

ZP3E – Y F [32] BM [N] – [AL14]
❶ ❷ ❸

❸ **Connection thread (Male thread)**

AL14	M14 x 1
AL16	M16 x 1.5

Vacuum inlet direction **Lateral**

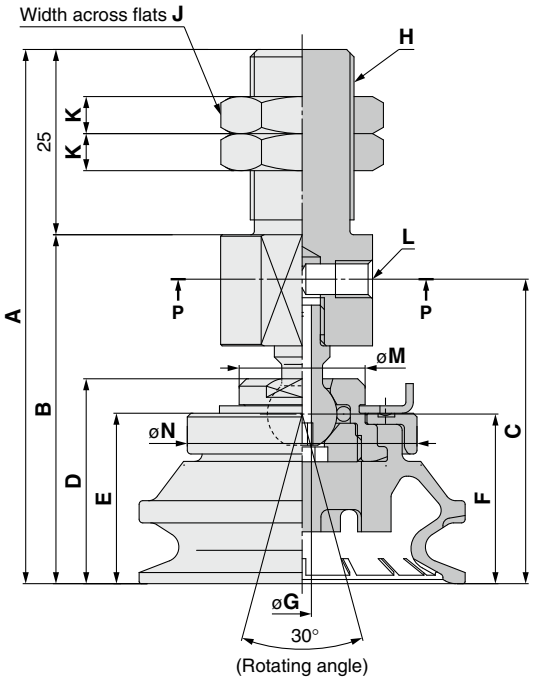

P-P
(ø**32** to ø**50**)

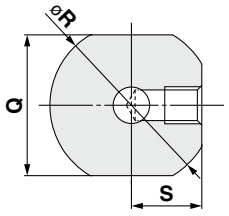

P-P
(ø**63** to ø**125**)

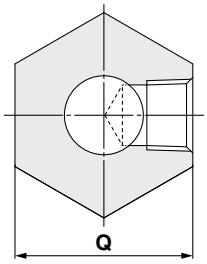

Construction	p. 235
Adapter Assembly	p. 243

Model						A	B	C	D	E	F	G	H	J	K	L	M	N	Q	R	S
	Vacuum inlet direction	❶ Pad dia.	Form	❷ *1 Material	❸ Connection thread																
ZP3E	YF	32	BM	N S U F CL	AL14	70.1	45.1	39.1	25.7	21	20.9	2.5	M14 x 1	19	5	M5 x 0.8/ Effective thread depth 5	17	31	19	22	9.5
		40				72.1	47.1	41.1	27.7	23	22.9										
		50				75.6	50.6	44.6	31.2	26.5	26.4							40			
		63			AL16	102	77	67	44	35	36.1	4	M16 x 1.5	22	6	Rc1/8	32	50	24		
		80				110	85	75	52	43	44.1							61			
		100				119.5	94.5	84.5	61.5	52.5	53.6							78.6			
		125				129	104	94	71	62	63.1							93.8			

*1 N: NBR, S: Silicone rubber, U: Urethane rubber, F: FKM, CL: Mark-free NBR

Dimensions/Models

With adapter ø32 to ø125

ZP3E – Y F [32] BM [N] – [B8]
❶ ❷ ❸

❸ Connection thread (Female thread)

B8	M8 x 1.25
B12	M12 x 1.75

Vacuum inlet direction Lateral

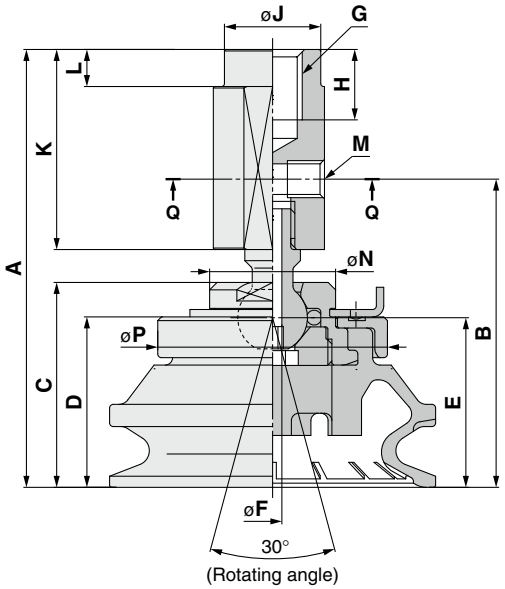

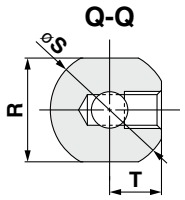

Construction	p. 236
Adapter Assembly	p. 243

Model						A	B	C	D	E	F	G	H	J	K	L	M	N	P	R	S	T
	Vacuum inlet direction	❶ Pad dia.	Form	❷ *1 Material	❸ Connection thread																	
ZP3E	YF	32	BM	N S U F CL	B8	57.1	39.6	25.7	21	20.9	2.5	M8 x 1.25	9.5	13	27	5	M5 x 0.8/ Effective thread depth 5	17	31	14	16	7
		40				59.1	41.6	27.7	23	22.9												
		50				62.6	45.1	31.2	26.5	26.4									40			
		63			B12	90	67	44	35	36.1	4	M12 x 1.75	11.5	18	40	6	Rc1/8	32	50	22	26	11
		80				98	75	52	43	44.1									61			
		100				107.5	84.5	61.5	52.5	53.6									78.6			
		125				117	94	71	62	63.1									93.8			

*1 N: NBR, S: Silicone rubber, U: Urethane rubber, F: FKM, CL: Mark-free NBR

Dimensions/Models

With buffer ø32 to ø125

ZP3E – T F 32 BM N JB 10
❶ ❷ ❹

❸ **Buffer specification**

JB	Rotating, With bushing

Vacuum inlet direction Vertical

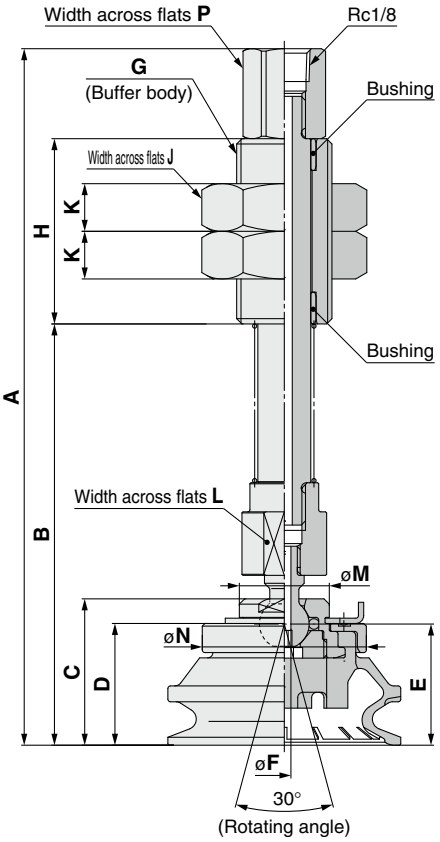

Construction	p. 236
Buffer Assembly	p. 244

Model							A	B	C	D	E	F	G	H	J	K	L	M	N	P
	Vacuum inlet direction	❶ Pad dia.	Form	❷ *1 Material	❸ Buffer spec.	❹ Buffer stroke														
ZP3E	TF	32	BM	N S U F CL	JB	10	129.6	77.6	25.7	21	20.9	2.5	M18 x 1.5	35	27	9	14	17	31	14
						30	154.6	102.6												
						50	174.6	122.6												
		40				10	131.6	79.6	27.7	23	22.9									
						30	156.6	104.6												
						50	176.6	124.6												
		50				10	135.1	83.1	31.2	26.5	26.4								40	
						30	160.1	108.1												
						50	180.1	128.1												
		63				10	182	112	44	35	36.1	4	M22 x 1.5	50	30	8	22	32	50	17
						30	207	137												
						50	227	157												
		80				10	190	120	52	43	44.1								61	
						30	215	145												
						50	235	165												
		100				10	199.5	129.5	61.5	52.5	53.6								78.6	
						30	224.5	154.5												
						50	244.5	174.5												
		125				10	209	139	71	62	63.1								93.8	
						30	234	164												
						50	254	184												

*1 N: NBR, S: Silicone rubber, U: Urethane rubber, F: FKM, CL: Mark-free NBR

Dimensions/Models

With buffer ø32 to ø125

ZP3E – Y F 32 BM N JB 10
❶ ❷ ❹

❸ **Buffer specification**

JB	Rotating, With bushing

Vacuum inlet direction Lateral

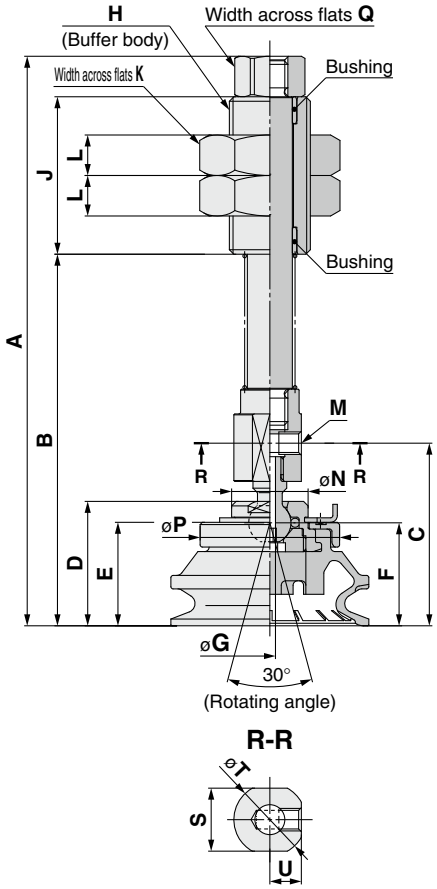

Construction	p. 236
Buffer Assembly	p. 244

Model							A	B	C	D	E	F	G	H	J	K	L	M	N	P	Q	S	T	U
	Vacuum inlet direction	❶ Pad dia.	Form	❷ *1 Material	❸ Buffer spec.	❹ Buffer stroke																		
ZP3E	YF	32	BM	NSUFCL	JB	10	124.6	80.6	38.6	25.7	21	20.9	2.5	M18 x 1.5	35	27	9	M5 x 0.8/ Effective thread depth 5	17	31	14	14	16	7
						30	149.6	105.6																
						50	169.6	125.6																
		40				10	126.6	82.6	40.6	27.7	23	22.9												
						30	151.6	107.6																
						50	171.6	127.6																
		50				10	130.1	86.1	44.1	31.2	26.5	26.4								40				
						30	155.1	111.1																
						50	175.1	131.1																
		63				10	178.5	118.5	67	44	35	36.1	4	M22 x 1.5	50	30	8	Rc1/8	32	50	17	22	26	11
						30	203.5	143.5																
						50	223.5	163.5																
		80				10	186.5	126.5	75	52	43	44.1								61				
						30	211.5	151.5																
						50	231.5	171.5																
		100				10	196	136	84.5	61.5	52.5	53.6								78.6				
						30	221	161																
						50	241	181																
		125				10	205.5	145.5	94	71	62	63.1								93.8				
						30	230.5	170.5																
						50	250.5	190.5																

*1 N: NBR, S: Silicone rubber, U: Urethane rubber, F: FKM, CL: Mark-free NBR

Construction

With adapter | Flat type with groove: ø32 to ø125 | Bellows type with ribs and groove: ø32 to ø125

Vacuum inlet direction Vertical T Type/ZP3E-T

ZP3E-T□-A□

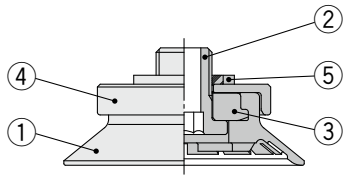

Component Parts

No.	Description	Material	Note
1	Pad	NBR, Silicone rubber, Urethane rubber, FKM, Mark-free NBR	Flat type with groove Bellows type with ribs and groove
2	Set screw	Brass (Electroless nickel plating)	
3	Plate	Aluminum alloy (Clear anodized)	
4	Holder	Aluminum alloy (Clear anodized)	Pad diameter: ø32 to ø50
		Structural steel (Electroless nickel plating)	Pad diameter: ø63 to ø125
5	Seal washer	Steel strip/NBR	

Vacuum inlet direction Vertical T Type/ZP3E-T

ZP3E-T□-B□

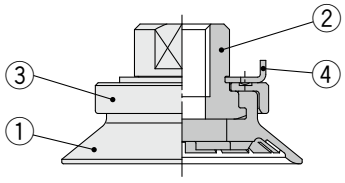

Component Parts

No.	Description	Material	Note
1	Pad	NBR, Silicone rubber, Urethane rubber, FKM, Mark-free NBR	Flat type with groove Bellows type with ribs and groove
2	Plate	Aluminum alloy (Clear anodized)	
3	Holder	Aluminum alloy (Clear anodized)	
4	Stopper	Stainless steel	

Vacuum inlet direction Vertical T Type/ZP3E-T

ZP3E-T□-AL□

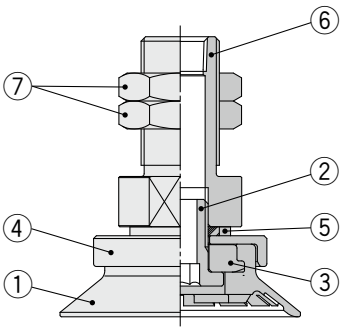

Vacuum inlet direction Lateral Y Type/ZP3E-Y

ZP3E-Y□-AL□

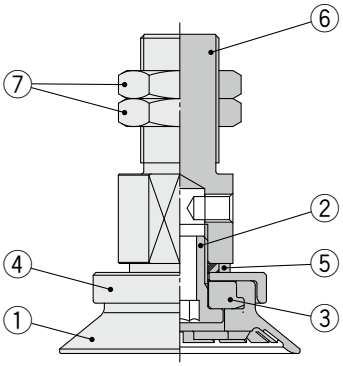

Component Parts

No.	Description	Material	Note
1	Pad	NBR, Silicone rubber, Urethane rubber, FKM, Mark-free NBR	Flat type with groove Bellows type with ribs and groove
2	Set screw	Brass (Electroless nickel plating)	
3	Plate	Aluminum alloy (Clear anodized)	
4	Holder	Aluminum alloy (Clear anodized)	Pad diameter: ø32 to ø50
		Structural steel (Electroless nickel plating)	Pad diameter: ø63 to ø125
5	Seal washer	Steel strip/NBR	
6	Adapter	Aluminum alloy (Clear anodized)	Pad diameter: ø32 to ø50
		Brass (Electroless nickel plating)	Pad diameter: ø63 to ø125
7	Nut	Brass (Electroless nickel plating)	Pad diameter: ø32 to ø50 M14 x 1
		Structural steel (Electroless nickel plating)	Pad diameter: ø63 to ø125 M16 x 1.5

With adapter

Flat type with groove: ø32 to ø125 | Bellows type with ribs and groove: ø32 to ø125

Vacuum inlet direction Lateral Y Type/ZP3E-Y

ZP3E-Y□-B□

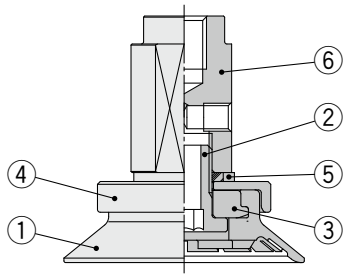

Component Parts

No.	Description	Material	Note
1	Pad	NBR, Silicone rubber, Urethane rubber, FKM, Mark-free NBR	Flat type with groove Bellows type with ribs and groove
2	Set screw	Brass (Electroless nickel plating)	
3	Plate	Aluminum alloy (Clear anodized)	
4	Holder	Aluminum alloy (Clear anodized)	Pad diameter: ø32 to ø50
		Structural steel (Electroless nickel plating)	Pad diameter: ø63 to ø125
5	Seal washer	Steel strip/NBR	
6	Adapter	Aluminum alloy (Clear anodized)	

With buffer

Flat type with groove: ø32 to ø125 | Bellows type with ribs and groove: ø32 to ø125

Vacuum inlet direction Vertical T Type/ZP3E-T

ZP3E-T□

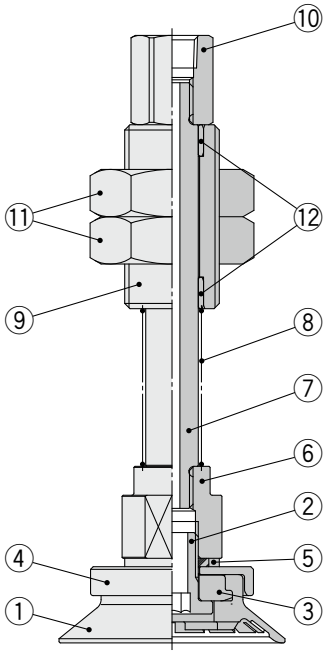

Vacuum inlet direction Lateral Y Type/ZP3E-Y

ZP3E-Y□

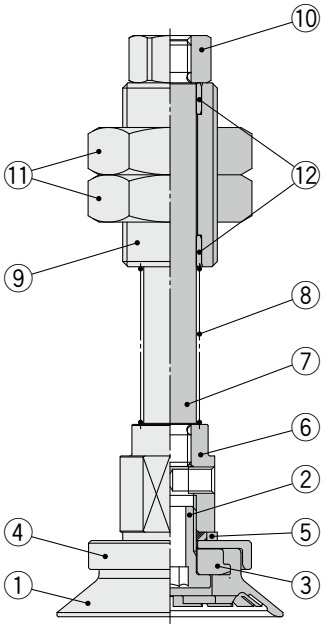

Component Parts

No.	Description	Material	Note
1	Pad	NBR, Silicone rubber, Urethane rubber, FKM, Mark-free NBR	Flat type with groove Bellows type with ribs and groove
2	Set screw	Brass (Electroless nickel plating)	
3	Plate	Aluminum alloy (Clear anodized)	
4	Holder	Aluminum alloy (Clear anodized)	Pad diameter: ø32 to ø50
		Structural steel (Electroless nickel plating)	Pad diameter: ø63 to ø125
5	Seal washer	Soft iron/NBR (Zinc chromated)	
6	Adapter	Aluminum alloy (Clear anodized)	
7	Piston rod	Structural steel (Hard chrome plating)	
8	Return spring	Stainless steel	
9	Buffer body	Brass (Electroless nickel plating)	
10	Buffer adapter	Brass (Electroless nickel plating)	
11	Nut	Structural steel (Nickel plating)	M18 x 1.5 M22 x 1.5
12	Bushing	—	

Construction

With adapter | Flat type with groove: ø32 to ø125 | Bellows type with ribs and groove: ø32 to ø125

Vacuum inlet direction Vertical T Type/ZP3E-TF

ZP3E-TF□-AL□

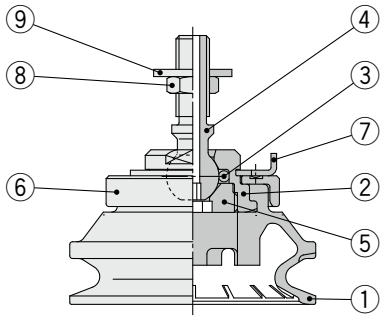

Component Parts

No.	Description	Material	Note
1	Pad	NBR, Silicone rubber, Urethane rubber, FKM, Mark-free NBR	Flat type with groove Bellows type with ribs and groove
2	Plate	Stainless steel	Pad diameter: ø32 to ø50
		Aluminum alloy (Clear anodized)	Pad diameter: ø63 to ø125
3	O-ring	FKM	
4	Shaft	Stainless steel	
5	Shaft ring	Stainless steel	
6	Holder	Aluminum alloy (Clear anodized)	
7	Stopper	Stainless steel	
8	Nut	Brass (Electroless nickel plating)	
9	Seal washer	Soft iron/NBR (Zinc chromated)	

Vacuum inlet direction Vertical T Type/ZP3E-TF

ZP3E-TF□-B□

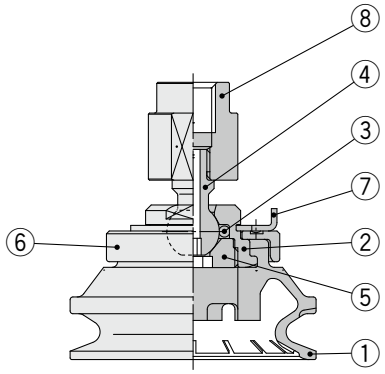

Component Parts

No.	Description	Material	Note
1	Pad	NBR, Silicone rubber, Urethane rubber, FKM, Mark-free NBR	Flat type with groove Bellows type with ribs and groove
2	Plate	Stainless steel	
3	O-ring	FKM	
4	Shaft	Stainless steel	
5	Shaft ring	Stainless steel	
6	Holder	Aluminum alloy (Clear anodized)	
7	Stopper	Stainless steel	
8	Adapter	Aluminum alloy (Clear anodized)	

Vacuum inlet direction Vertical T Type/ZP3E-TF

ZP3E-TF□-AL□

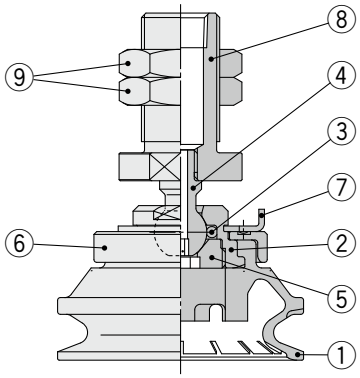

Vacuum inlet direction Lateral Y Type/ZP3E-YF

ZP3E-YF□-AL□

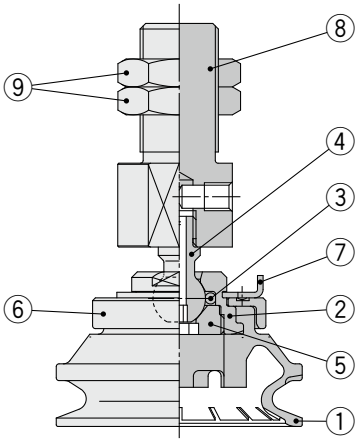

Component Parts

No.	Description	Material	Note
1	Pad	NBR, Silicone rubber, Urethane rubber, FKM, Mark-free NBR	Flat type with groove Bellows type with ribs and groove
2	Plate	Stainless steel	
3	O-ring	FKM	
4	Shaft	Stainless steel	
5	Shaft ring	Stainless steel	
6	Holder	Aluminum alloy (Clear anodized)	
7	Stopper	Stainless steel	
8	Adapter	Aluminum alloy (Clear anodized)	Pad diameter: ø32 to ø50 M14 x 1
		Brass (Electroless nickel plating)	Pad diameter: ø63 to ø125 M16 x 1.5
9	Nut	Brass (Electroless nickel plating)	

With adapter

Flat type with groove: ø32 to ø125 | Bellows type with ribs and groove: ø32 to ø125

Vacuum inlet direction Lateral Y Type/ZP3E-YF

ZP3E-YF□-B□

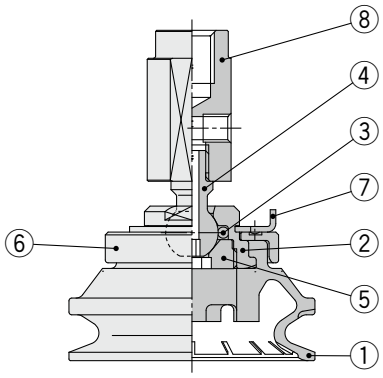

Component Parts

No.	Description	Material	Note
1	**Pad**	NBR, Silicone rubber, Urethane rubber, FKM, Mark-free NBR	Flat type with groove Bellows type with ribs and groove
2	**Plate**	Stainless steel	
3	**O-ring**	FKM	
4	**Shaft**	Stainless steel	
5	**Shaft ring**	Stainless steel	
6	**Holder**	Aluminum alloy (Clear anodized)	
7	**Stopper**	Stainless steel	
8	**Adapter**	Aluminum alloy (Clear anodized)	

With buffer

Flat type with groove: ø32 to ø125 | Bellows type with ribs and groove: ø32 to ø125

Vacuum inlet direction Vertical T Type/ZP3E-TF

ZP3E-TF□

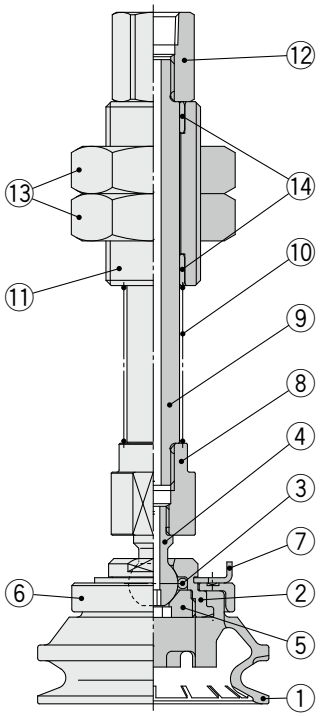

Vacuum inlet direction Lateral Y Type/ZP3E-YF

ZP3E-YF□

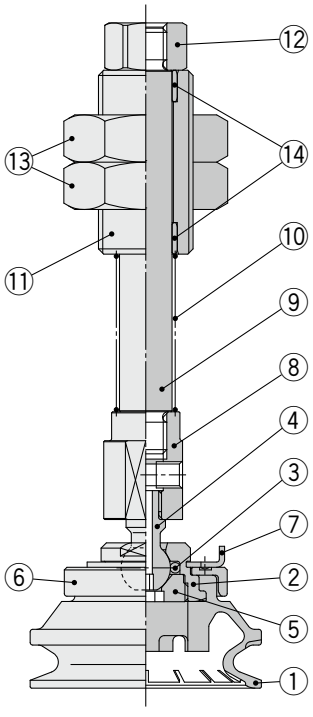

Component Parts

No.	Description	Material	Note
1	**Pad**	NBR, Silicone rubber, Urethane rubber, FKM, Mark-free NBR	Flat type with groove Bellows type with ribs and groove
2	**Plate**	Stainless steel	Pad diameter: ø32 to ø50
		Aluminum alloy (Clear anodized)	Pad diameter: ø63 to ø125
3	**O-ring**	FKM	
4	**Shaft**	Stainless steel	
5	**Shaft ring**	Stainless steel	
6	**Holder**	Aluminum alloy (Clear anodized)	
7	**Stopper**	Stainless steel	
8	**Adapter**	Aluminum alloy (Clear anodized)	
9	**Piston rod**	Structural steel (Electroless nickel plating)	
10	**Return spring**	Stainless steel	
11	**Buffer body**	Brass (Electroless nickel plating)	
12	**Buffer adapter**	Brass (Electroless nickel plating)	
13	**Nut**	Structural steel (Nickel plating)	M18 x 1.5 M22 x 1.5
14	**Bushing**	—	

High Rigidity Pad *ZP3E* Standard Type *Series*
Mounting Bracket Assembly

Adapter Assembly: Vacuum Inlet Direction **Vertical** T Type/ZP3E-T

Product part no.

ZP3E - T ① ② □ - ③(A10/A16/AL14/AL16)

- ① Pad diameter
- ② Pad form
- □ Pad material
- ③(A10/A16/AL14/AL16) Connection thread (Male thread)

Component parts

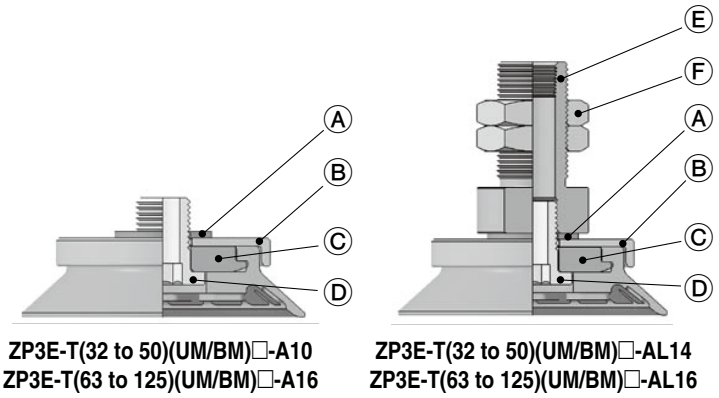

ZP3E-T(32 to 50)(UM/BM)□-A10
ZP3E-T(63 to 125)(UM/BM)□-A16

ZP3E-T(32 to 50)(UM/BM)□-AL14
ZP3E-T(63 to 125)(UM/BM)□-AL16

Ⓐ Seal washer

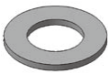

Ⓑ Holder



Ⓒ Plate



Ⓓ Set screw



Ⓔ Male thread adapter (With mounting nut)

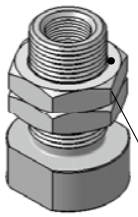

		Symbol	① Pad diameter symbol						
			32	40	50	63	80	100	125
Ⓐ Seal washer		M10 x 1	ZP3EA-SW10			—			
		M16 x 1.5	—			ZP3EA-SW16			
Ⓑ Holder	② Pad form	Flat type with groove UM	ZP3EA-H1A		ZP3EA-H2A	ZP3EA-H3A		ZP3EA-H4A	ZP3EA-H5A
		Bellows type with ribs and groove BM				ZP3EA-H3A	ZP3EA-H4A	ZP3EA-H5A	ZP3EA-H6A
Ⓒ Plate		Flat type with groove UM	ZP3EA-P1		ZP3EA-P2	ZP3EA-P3		ZP3EA-P4	ZP3EA-P5
		Bellows type with ribs and groove BM				ZP3EA-P3	ZP3EA-P4	ZP3EA-P5	ZP3EA-P6
Ⓓ Set screw			ZP3EA-A10			ZP3EA-A16			
Ⓔ Male thread adapter	③ Connection thread	M10 x 1 A10	—						
		M16 x 1.5 A16	—						
		M14 x 1 AL14	ZP3EA-TAL14			—			
		M16 x 1.5 AL16	—			ZP3EA-TAL16			
Ⓕ Mounting nut (Single unit)		M14 x 1	ZPNA-M14			—			
		M16 x 1.5	—			ZPNA-M16			

Adapter Assembly: Vacuum Inlet Direction **Vertical** T Type/ZP3E-T

Product part no.

ZP3E - T ① ② □ - ③(B8/B10/B12/B18)

- ① Pad diameter
- ② Pad form
- □ Pad material
- ③(B8/B10/B12/B18) Connection thread (Female thread)

Component parts

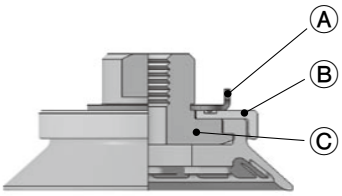

ⒶStopper



ⒷHolder

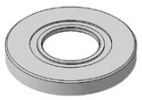

ⒸFemale thread plate



				Symbol	❶Pad diameter symbol						
					32	40	50	63	80	100	125
ⒶStopper					ZP3EA-S1			ZP3EA-S2			
ⒷHolder			❷Pad form: Flat type with groove	UM	ZP3EA-H1B		ZP3EA-H2B	ZP3EA-H3B		ZP3EA-H4B	ZP3EA-H5B
			❷Pad form: Bellows type with ribs and groove	BM				ZP3EA-H3B	ZP3EA-H4B	ZP3EA-H5B	ZP3EA-H6B
ⒸFemale thread plate	❷Pad form	Flat type with groove	UM	❸Connection thread: M8 x 1.25	B8	ZP3EA-PT1-B8		ZP3EA-PT2-B8	—		
				❸Connection thread: M10 x 1.5	B10	ZP3EA-PT1-B10		ZP3EA-PT2-B10	—		
				❸Connection thread: M12 x 1.75	B12	—			ZP3EA-PT3-B12	ZP3EA-PT4-B12	ZP3EA-PT5-B12
				❸Connection thread: M18 x 1.5	B18	—			ZP3EA-PT3-B18	ZP3EA-PT4-B18	ZP3EA-PT5-B18
		Bellows type with ribs and groove	BM	❸Connection thread: M8 x 1.25	B8	ZP3EA-PT1-B8		ZP3EA-PT2-B8	—		
				❸Connection thread: M10 x 1.5	B10	ZP3EA-PT1-B10		ZP3EA-PT2-B10	—		
				❸Connection thread: M12 x 1.75	B12	—			ZP3EA-PT3-B12	ZP3EA-PT4-B12	ZP3EA-PT5-B12	ZP3EA-PT6-B12
				❸Connection thread: M18 x 1.5	B18	—			ZP3EA-PT3-B18	ZP3EA-PT4-B18	ZP3EA-PT5-B18	ZP3EA-PT6-B18

Adapter Assembly: Vacuum Inlet Direction Lateral Y Type/ZP3E-Y

Product part no.

ZP3E - Y ① ② □ - ③

- ① Pad diameter
- ② Pad form
- □ Pad material
- ③ Connection thread (Male/Female thread)

Component parts

Ⓔ Male thread adapter (With mounting nut)

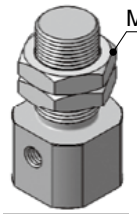

Ⓔ Female thread adapter



ⒶSeal washer



ⒷHolder



ⒸPlate



ⒹSet screw



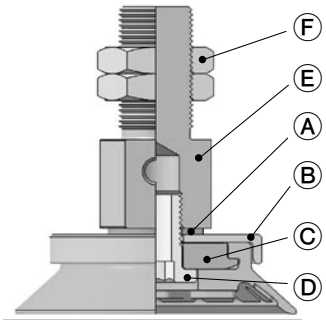

ZP3E-Y(32 to 50)(UM/BM)□-AL14
ZP3E-Y(63 to 125)(UM/BM)□-AL16

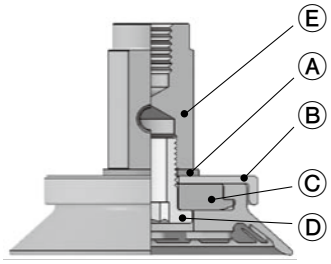

ZP3E-Y(32 to 50)(UM/BM)□-B8
ZP3E-Y(63 to 125)(UM/BM)□-B12

			Symbol	❶Pad diameter symbol						
				32	40	50	63	80	100	125
ⒶSeal washer		M10 x 1		ZP3EA-SW10			—			
		M16 x 1.5		—			ZP3EA-SW16			
ⒷHolder	❷Pad form	Flat type with groove	UM	ZP3EA-H1A		ZP3EA-H2A	ZP3EA-H3A		ZP3EA-H4A	ZP3EA-H5A
		Bellows type with ribs and groove	BM				ZP3EA-H3A	ZP3EA-H4A	ZP3EA-H5A	ZP3EA-H6A
ⒸPlate	❷Pad form	Flat type with groove	UM	ZP3EA-P1		ZP3EA-P2	ZP3EA-P3		ZP3EA-P4	ZP3EA-P5
		Bellows type with ribs and groove	BM				ZP3EA-P3	ZP3EA-P4	ZP3EA-P5	ZP3EA-P6
ⒹSet screw				ZP3EA-A10			ZP3EA-A16			
Ⓔ Adapter ❸Connection thread	Male thread	M14 x 1	AL14	ZP3EA-YAL14			—			
		M16 x 1.5	AL16	—			ZP3EA-YAL16			
	Female thread	M8 x 1.25	B8	ZP3EA-YB8			—			
		M12 x 1.75	B12	—			ZP3EA-YB12			
ⒻMounting nut (Single unit)		M14 x 1		ZPNA-M14			—			
		M16 x 1.5		—			ZPNA-M16			

Buffer Assembly: Vacuum Inlet Direction **Vertical** T Type/ZP3E-T, Lateral Y Type/ZP3E-Y

Product part no.

ZP3E - (T/Y) ① ② □ JB ③

- ① Pad diameter
- ② Pad form
- □ Pad material
- ③ Buffer stroke

Component parts

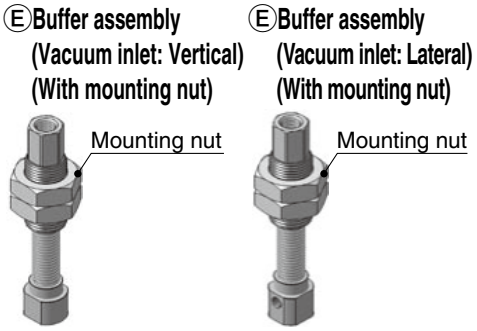





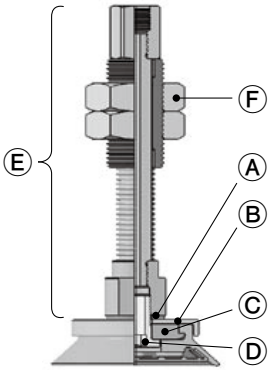

ZP3E-T(32 to 125)(UM/BM)□JB(10 to 50)

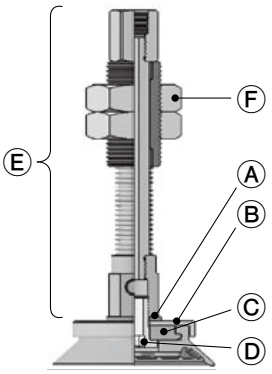

ZP3E-Y(32 to 125)(UM/BM)□JB(10 to 50)





		Symbol	① Pad diameter symbol						
			32	40	50	63	80	100	125
Ⓐ Seal washer		M10 x 1	ZP3EA-SW10			—			
		M16 x 1.5	—			ZP3EA-SW16			
Ⓑ Holder	② Pad form: Flat type with groove	UM	ZP3EA-H1A		ZP3EA-H2A	ZP3EA-H3A		ZP3EA-H4A	ZP3EA-H5A
	② Pad form: Bellows type with ribs and groove	BM				ZP3EA-H3A	ZP3EA-H4A	ZP3EA-H5A	ZP3EA-H6A
Ⓒ Plate	② Pad form: Flat type with groove	UM	ZP3EA-P1		ZP3EA-P2	ZP3EA-P3		ZP3EA-P4	ZP3EA-P5
	② Pad form: Bellows type with ribs and groove	BM				ZP3EA-P3	ZP3EA-P4	ZP3EA-P5	ZP3EA-P6
Ⓓ Set screw			ZP3EA-A10			ZP3EA-A16			
Ⓔ Buffer assembly			ZP3EB-(T/Y)1JB③			ZP3EB-(T/Y)2JB③			
Ⓕ Mounting nut (Single unit)		M18 x 1.5	ZPNA-M18			—			
		M22 x 1.5	—			ZPNA-M22			

[Buffer assembly part number example]

Product part no. **ZP3E-T32UMN JB 10**

Buffer assembly **ZP3EB-T1 JB 10**

③ Buffer stroke

High Rigidity Pad *ZP3E* Ball Joint Type *Series*
Mounting Bracket Assembly

Adapter Assembly: Vacuum Inlet Direction **Vertical** T Type/ZP3E-TF

Product part no.

ZP3E - TF ① ② □ - ③(AL6/AL12)

- ① Pad diameter
- ② Pad form
- □ Pad material
- ③(AL6/AL12) Connection thread (Male thread)

Component parts

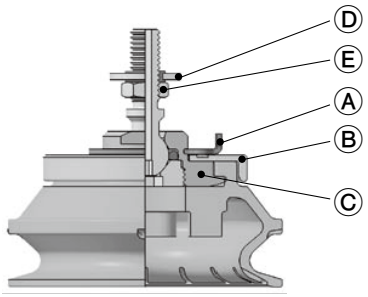

Ⓐ Stopper



Ⓑ Holder

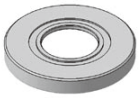

Ⓒ Ball joint unit
(With seal washer
With mounting nut)

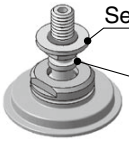

			Symbol	① Pad diameter symbol						
				32	40	50	63	80	100	125
Ⓐ Stopper				ZP3EA-S1			ZP3EA-S2			
Ⓑ Holder	② Pad form	Flat type with groove	UM	ZP3EA-H1B		ZP3EA-H2B	ZP3EA-H3B		ZP3EA-H4B	ZP3EA-H5B
		Bellows type with ribs and groove	BM				ZP3EA-H3B	ZP3EA-H4B	ZP3EA-H5B	ZP3EA-H6B
Ⓒ Ball joint unit	② Pad form	Flat type with groove	UM	ZP3EA-F1-AL6		ZP3EA-F2-AL6	ZP3EA-F3-AL12		ZP3EA-F4-AL12	ZP3EA-F5-AL12
		Bellows type with ribs and groove	BM				ZP3EA-F3-AL12	ZP3EA-F4-AL12	ZP3EA-F5-AL12	ZP3EA-F6-AL12
Ⓓ Seal washer (Single unit)		M6 x 1		ZP3EA-SW6			—			
		M12 x 1.25		—			ZP3EA-SW12			
Ⓔ Mounting nut (Single unit)		M6 x 1		ZPNA-M6			—			
		M12 x 1.25		—			ZPNA-M12			

Adapter Assembly: Vacuum Inlet Direction **Vertical** T Type/ZP3E-TF

Product part no.

ZP3E - TF ① ② □ - ③(AL14/AL16/B8/B12)

- ① Pad diameter
- ② Pad form
- □ Pad material
- ③(AL14/AL16/B8/B12) Connection thread (Male/Female thread)

Component parts

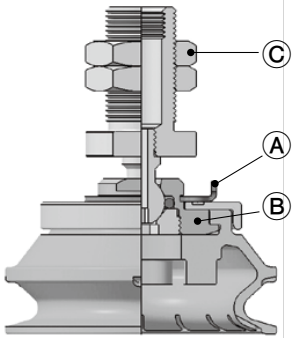

ZP3E-TF(32 to 125)(UM/BM)□-(AL14/AL16)

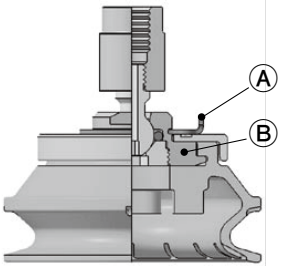

ZP3E-TF(32 to 125)(UM/BM)□-(B8/B12)

Ⓐ Stopper



Ⓑ Ball joint unit (Male thread) (With mounting nut)

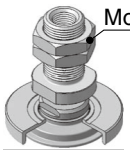

Ⓑ Ball joint unit (Female thread)

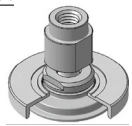

						Symbol	❶ Pad diameter symbol						
							32	40	50	63	80	100	125
Ⓐ Stopper							ZP3EA-S1			ZP3EA-S2			
Ⓑ Ball joint unit	❷ Pad form: Flat type with groove		UM	❸ Connection thread: Male thread	M14 x 1	AL14	ZP3EU-F1-TAL14		ZP3EU-F2-TAL14	—			
					M16 x 1.5	AL16	—			ZP3EU-F3-TAL16		ZP3EU-F4-TAL16	ZP3EU-F5-TAL16
				Female thread	M8 x 1.25	B8	ZP3EU-F1-TB8		ZP3EU-F2-TB8	—			
					M12 x 1.75	B12	—			ZP3EU-F3-TB12		ZP3EU-F4-TB12	ZP3EU-F5-TB12
		Bellows type with ribs and groove	BM	Male thread	M14 x 1	AL14	ZP3EU-F1-TAL14		ZP3EU-F2-TAL14	—			
					M16 x 1.5	AL16	—			ZP3EU-F3-TAL16	ZP3EU-F4-TAL16	ZP3EU-F5-TAL16	ZP3EU-F6-TAL16
				Female thread	M8 x 1.25	B8	ZP3EU-F1-TB8		ZP3EU-F2-TB8	—			
					M12 x 1.75	B12	—			ZP3EU-F3-TB12	ZP3EU-F4-TB12	ZP3EU-F5-TB12	ZP3EU-F6-TB12
Ⓒ Mounting nut (Single unit)					M14 x 1		ZPNA-M14			—			
					M16 x 1.5		—			ZPNA-M16			

Adapter Assembly: Vacuum Inlet Direction Lateral Y Type/ZP3E-YF

Product part no.

ZP3E - YF ① ② □ - ③

- ① Pad diameter
- ② Pad form
- □ Pad material
- ③ Connection thread (Male/Female thread)

Component parts

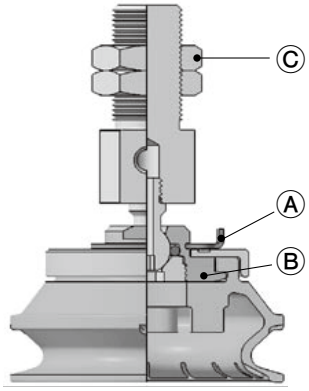

ZP3E-YF(32 to 125)(UM/BM)□-(AL14/AL16)

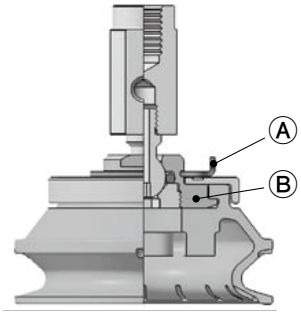

ZP3E-YF(32 to 125)(UM/BM)□-(B8/B12)

Ⓐ Stopper



Ⓑ Ball joint unit (Male thread) (With mounting nut)

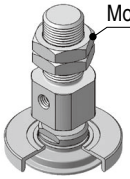

Ⓑ Ball joint unit (Female thread)

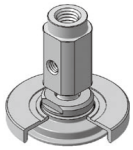

						Symbol	❶ Pad diameter symbol						
							32	40	50	63	80	100	125
Ⓐ Stopper							ZP3EA-S1			ZP3EA-S2			
Ⓑ Ball joint unit	❷ Pad form: Flat type with groove	UM	❸ Connection thread: Male thread	M14 x 1		AL14	ZP3EU-F1-YAL14		ZP3EU-F2-YAL14	—			
				M16 x 1.5		AL16	—			ZP3EU-F3-YAL16		ZP3EU-F4-YAL16	ZP3EU-F5-YAL16
			Female thread	M8 x 1.25		B8	ZP3EU-F1-YB8		ZP3EU-F2-YB8	—			
				M12 x 1.75		B12	—			ZP3EU-F3-YB12		ZP3EU-F4-YB12	ZP3EU-F5-YB12
	❷ Pad form: Bellows type with ribs and groove	BM	❸ Connection thread: Male thread	M14 x 1		AL14	ZP3EU-F1-YAL14		ZP3EU-F2-YAL14	—			
				M16 x 1.5		AL16	—			ZP3EU-F3-YAL16	ZP3EU-F4-YAL16	ZP3EU-F5-YAL16	ZP3EU-F6-YAL16
			Female thread	M8 x 1.25		B8	ZP3EU-F1-YB8		ZP3EU-F2-YB8	—			
				M12 x 1.75		B12	—			ZP3EU-F3-YB12	ZP3EU-F4-YB12	ZP3EU-F5-YB12	ZP3EU-F6-YB12
Ⓒ Mounting nut (Single unit)				M14 x 1			ZPNA-M14			—			
				M16 x 1.5			—			ZPNA-M16			

Buffer Assembly: Vacuum Inlet Direction Vertical T Type/ZP3E-TF, Lateral Y Type/ZP3E-YF

Product part no.

ZP3E - (T/Y) F ① ② □ JB ③

- ① Pad diameter
- ② Pad form
- □ Pad material
- ③ Buffer stroke

Component parts

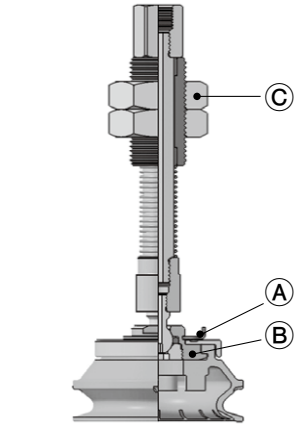

ZP3E-TF(32 to 125)(UM/BM)□JB(10 to 50)

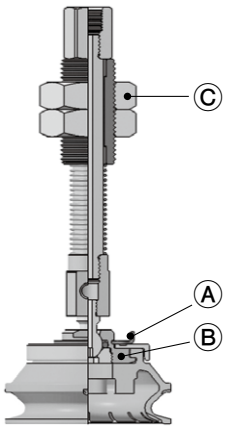

ZP3E-YF(32 to 125)(UM/BM)□JB(10 to 50)

Ⓐ**Stopper**



Ⓑ**Ball joint buffer unit (Male thread) (With mounting nut)**

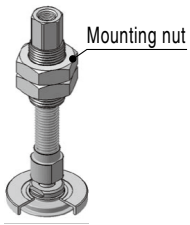

Ⓑ**Ball joint buffer unit (Female thread) (With mounting nut)**

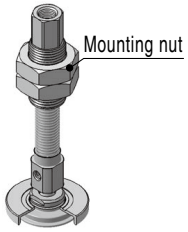

			Symbol	❶Pad diameter symbol						
				32	40	50	63	80	100	125
Ⓐ**Stopper**				ZP3EA-S1			ZP3EA-S2			
Ⓑ**Ball joint buffer unit**	❷Pad form	Flat type with groove	UM	ZP3EU-(T/Y)F1JB③		ZP3EU-(T/Y)F2JB③	ZP3EU-(T/Y)F3JB③		ZP3EU-(T/Y)F4JB③	ZP3EU-(T/Y)F5JB③
		Bellows type with ribs and groove	BM	ZP3EU-(T/Y)F1JB③		ZP3EU-(T/Y)F2JB③	ZP3EU-(T/Y)F3JB③	ZP3EU-(T/Y)F4JB③	ZP3EU-(T/Y)F5JB③	ZP3EU-(T/Y)F6JB③
Ⓒ**Mounting nut (Single unit)**		M18 x 1.5		ZPNA-M18			—			
		M22 x 1.5		—			ZPNA-M22			

[Buffer unit part number example]

Product part no. **ZP3E-TF32UMN JB 10**

Buffer assembly **ZP3EU-TF1 JB 10**

③**Buffer stroke**

ZP3E Series
How to Replace the Pad

With Set Screw

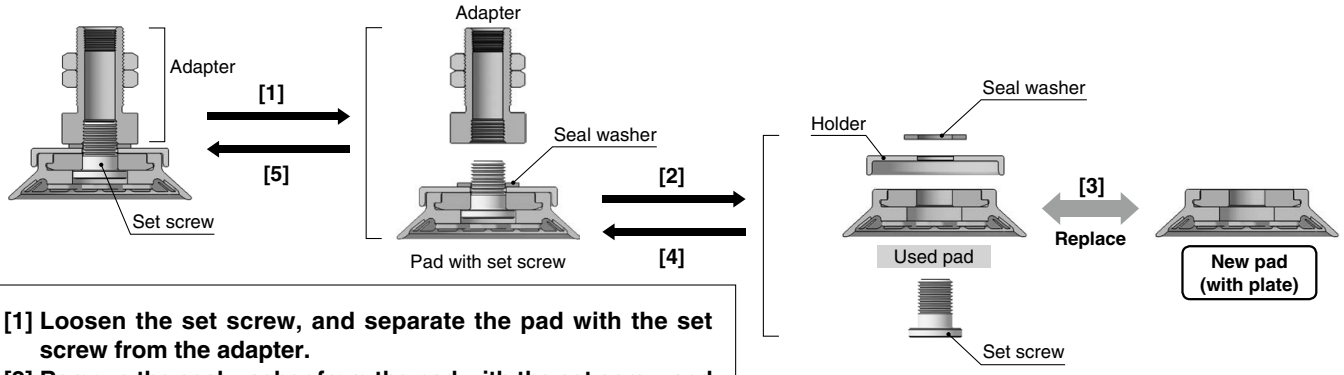

[1] Loosen the set screw, and separate the pad with the set screw from the adapter.
[2] Remove the seal washer from the pad with the set screw and separate it into seal washer, holder, pad and set screw. ∗1
[3] Replace the pad (with plate) with a new one.
[4] Insert the set screw from the suction surface side of the new pad, and mount the holder and seal washer in order.
[5] Mount the adapter onto the set screw. ∗2

∗1 When mounting and removing the seal washer, rotate the set screw while the seal washer is being held.

∗2 Refer to the tightening torque shown in Table 1 for adapter mounting.

Table 1: Recommended Set Screw Tightening Torque

Product specifications			Tightening torque [N·m]
Pad diameter	Product part no.	Mounting thread size	
ø32 to ø50	**ZP3E-(32 to 50)UM□□**	M10 x 1	8 to 10
	ZP3E-(32 to 50)BM□□		
ø63 to ø125	**ZP3E-(63 to 125)UM□□**	M16 x 1.5	13 to 15
	ZP3E-(63 to 125)BM□□		

∗ Refer to “Pad Unit (with Plate)” shown below for the replacement method for pads with plate.

With Stopper (with Female Thread Plate/with Ball Joint Unit)

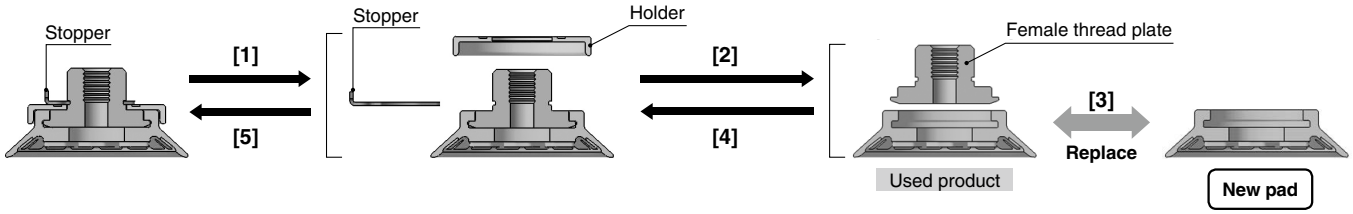

[1] Pull out the stopper horizontally and remove the holder from the product.
[2] Remove the female plate.
[3] Replace the pad with a new one.
[4] Insert the female thread plate into the new pad.
[5] Mount the holder and insert the stopper into the specified position.

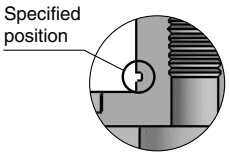

∗ Refer to “Pad Unit (with Plate)” shown below for the replacement method for pads with plate.

Pad Unit (with Plate)

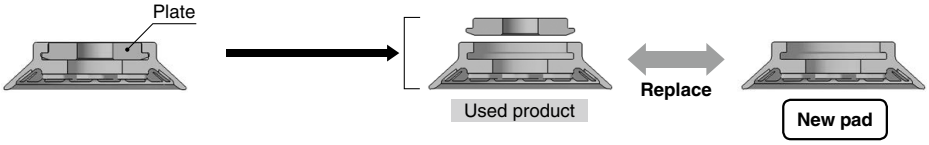

Remove the plate and replace the pad with a new one. Reassemble the product.

∗ Press the outer circumference of the plate insertion area by hand to eliminate distortion.

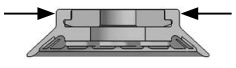

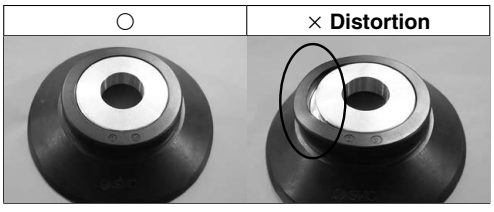

∗ The same replacement method is applicable to the replacement of the pad unit with a female thread plate or ball joint unit.

High Rigidity Pad
Specific Product Precautions

Be sure to read this before handling the products.
Refer to page 375 for safety instructions. For vacuum equipment and vacuum pad precautions, refer to pages 376 to 379.

Mounting

1. Tighten the screw within the specified torque range when mounting the buffer.

Tightening with a torque outside of the specified range may cause malfunction.

High Rigidity ZP3E Series

Model	Connection thread	Tightening torque [N·m]
ZP3E-□(32 to 50)□JB□	M18 x 1.5	28 to 32
ZP3E-□(63 to 125)□JB□	M22 x 1.5	45 to 50

Pads for Special Applications ZP2/ZP3P Series

ø0.8 to ø125

Mark-free, For Film Adsorption, Multistage, Flat, Nozzle, Sponge, For Disk Adsorption, For Panel Holding, Ball Spline Buffer

Mark-free ø4 to ø125

For use where adsorption marks must not be left on workpieces p. 251

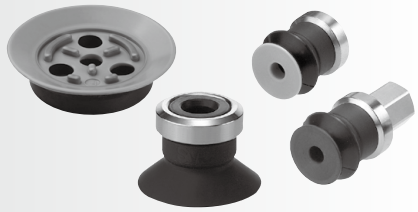

For Film Adsorption ø20 to ø50

Good for film packaging applications p. 266



Multistage ø6 to ø46

For spherical workpieces or workpieces with inclined surfaces p. 276

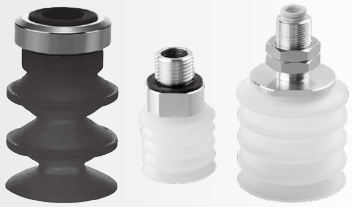

Flat ø10 to ø30

For flexible sheets or vinyl p. 286



Nozzle ø0.8/ø1.1

Compact, Space saving p. 289



Sponge ø4 to ø15

For workpieces with bumps p. 290



For Disk Adsorption

- For the adsorption of circular components like CDs and DVDs
- The bellows mechanism in the pad helps to dampen the impact to workpieces.

p. 294

For Panel Holding

- For the adsorption and holding of the stage of panels, glass circuit boards, etc.
- The bellows mechanism allows for complete contact with curved work surfaces.

p. 295

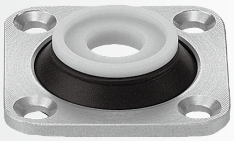

Ball Spline Buffer ø2 to ø8

The ball spline guide is used for buffers. p. 297



Pad Material: ZP2 Series

Material	NBR (Nitrile rubber)	Silicone rubber*1	Urethane rubber	FKM (Fluoro rubber)	Conductive NBR (Nitrile rubber)	Conductive silicone rubber	Conductive silicone sponge	Conductive CR sponge (Chloroprene sponge)
Color of rubber	Black	White	Brown	Black				
Rubber hardness HS (±5°)	A50/S	A40/S	A60/S		A50/S		20	15
Identification (Dot)	—	—	—	· 1 green dot	· 1 silver dot	· 2 silver dots	—	—

*1 Compliant with the FDA (USA Food and Drug Administration) regulation 21CFR§177.2600 for "Rubber articles intended for repeated use"

Pad Material: ZP3P Series

Material	Silicone rubber*1
Color of rubber	Blue
Rubber hardness HS (±5°)	A40/S
Identification (Dot)	—

*1 Compliant with the FDA (USA Food and Drug Administration) regulation 21CFR§177.2600 for "Rubber articles intended for repeated use"

	Application		Symbol	Pad		Page
				Form	Diameter	
Mark-free	**Mark-free Pad** For use where adsorption marks must not be left on workpieces Standard pad / Mark-free pad  Clear trace of the pad — No trace of the pad ■ Mark-free NBR pad ■ Fluororesin-coated pad 	 Single unit	U	Flat type	ø4, ø6, ø8 ø10, ø16 ø25, ø32 ø40, ø50	253
		 Single unit 	H	High rigidity (Flat type with ribs)	ø40, ø50 ø63, ø80 ø100, ø125	254
	Resin Attachment Mark-free, Prevents the rubber from sticking to workpieces 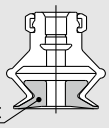 Attachment	 Single unit  With pad	—	Bellows type	ø6, ø8 ø10, ø13 ø16, ø20 ø25, ø32	264
For Film Adsorption	**For Film Adsorption** Good for film packaging applications 	 Single unit	PT		ø20, ø25 ø35, ø50	267
Multistage	**Bellows Pad** For use where there is no space for a buffer (spring type) For workpieces with inclined adsorption surfaces 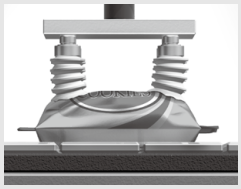 	 Single unit  With adapter	ZJ	Bellows type (Multistage type)	ø15, ø20 ø30, ø40 ø46	276
		 Single unit	J	Bellows type (Multistage type)	ø6, ø9, ø10 ø14, ø15 ø16, ø25 ø30	282
Flat	**Flat Pad** For the adsorption of flexible sheets or film Reduced deformation of flat surfaces during adsorption 	 Single unit  With adapter	MT	Thin flat type (With groove)	ø10, ø15 ø20, ø25 ø30	286
Nozzle	**Nozzle Pad** For the adsorption of small components such as IC chips 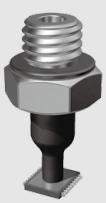	 Single unit  With adapter	AN	Nozzle type	ø0.8, ø1.1	289

	Application		Symbol	Pad		Page
				Form	Diameter	
Sponge	**Sponge Pad** **For the adsorption of workpieces with bumps** 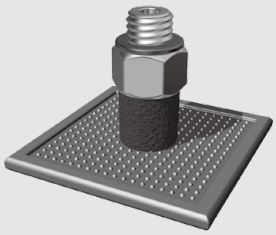	 Single unit	**S**	Sponge	**ø4, ø6, ø8 ø10, ø15**	**290**
		 With adapter				**291**
For Disk Adsorption	**Vacuum Pad for Disk Adsorption** • For the adsorption of circular components like CDs and DVDs • The bellows mechanism in the pad helps to dampen the impact to workpieces. 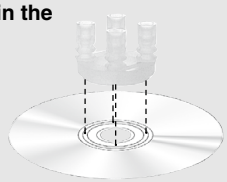		**20 x 25 (ID x OD: PCD 22.5)**			**294**
For Panel Holding	**Vacuum Pad for Panel Holding** • For the adsorption and holding of the stage of panels, glass circuit boards, etc. • The bellows mechanism allows for complete contact with curved work surfaces. 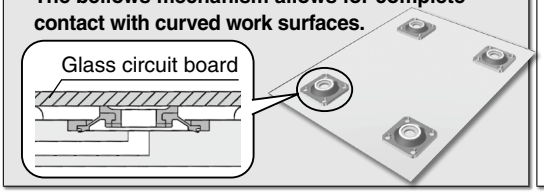	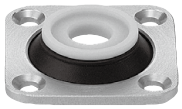	—			**295**
Ball Spline Buffer	**Pad with Ball Spline Buffer** **The ball spline guide is used for buffers.** 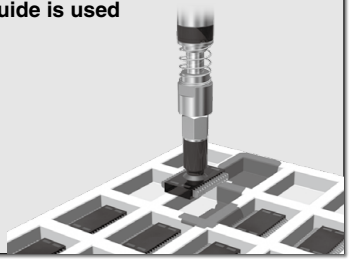		**U**	Flat type	**ø2, ø4 ø6, ø8**	**297**

Mark-free Pad Series *ZP2/ZP3E Series*

Minimizes the transfer of rubber constituents to workpieces

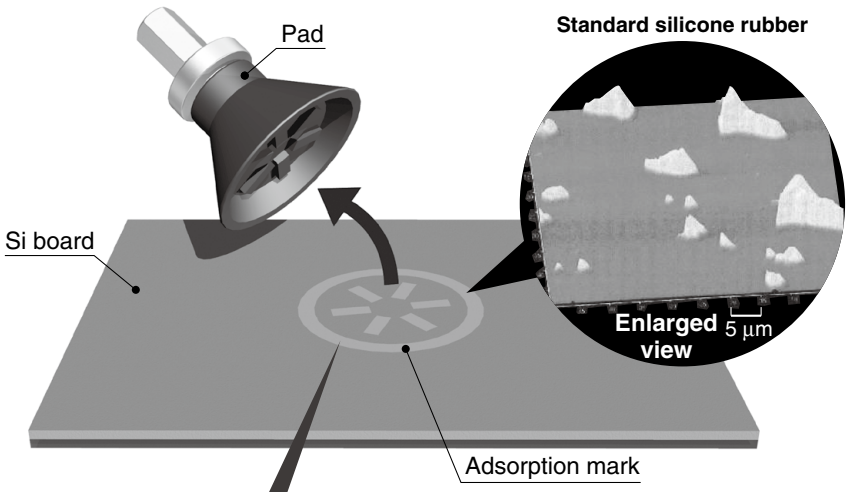

Analysis equipment:
Scanning probe microscope

Measurement conditions:
Measurement mode
Atomic force microscope DFM mode

Sample conditions:
Pressing of the vacuum pad to the Si board for 1 hour

Monitoring location:
Monitored at a randomly selected location where adsorption marks were likely due to contact between the vacuum pad and Si board

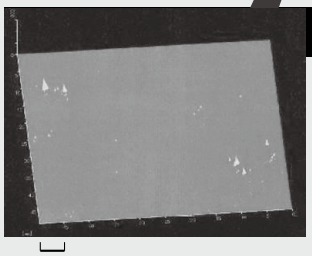

1 Mark-free NBR Pad

Minimizes the transfer of rubber constituents which are said to be the cause of adsorption marks

Pad diameter: ø4 to ø125



ZP2 p. 253



High Rigidity ZP2 p. 254



High Rigidity ZP3E p. 200

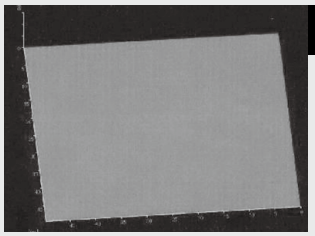

2 Fluororesin-coated Pad

A fluororesin sheet is baked onto the pad adsorption surface.
Prevents the transfer of rubber constituents

Pad diameter: ø40 to ø125
Pad material: NBR, FKM



High Rigidity ZP2 p. 254

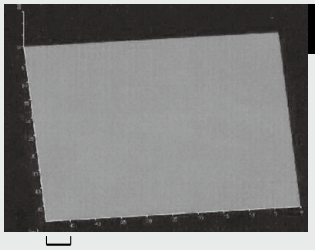

3 Resin Attachment

PEEK material is used for the pad adsorption surface.
Prevents the transfer of rubber constituents

Applicable pad diameter: ø6 to ø32

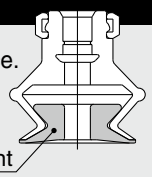



ZP2 p. 264

The above images of adsorption marks are sample data. Actual results will depend on the actual conditions.

Related Product

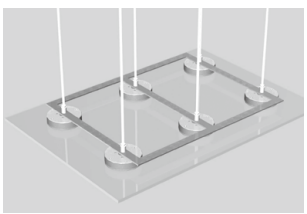

4 Non-contact Gripper

No adsorption marks are left because the vacuum pad does not come into contact with workpieces.

p. 353



	Pad type	Series	Pad form	Material of the adsorption part (Part in contact with workpieces)	Adsorption mark*1 Condition*2 (Initial value) Visual checking	Adsorption mark*1 Condition*2 (Initial value) Vapor method*3	Operating temperature range (°C)	Static friction ratio*5
Mark-free Pad Series	1 Mark-free NBR 	ZP2 ZP3E	Flat type Flat type with groove Bellows type with ribs and groove	Mark-free NBR (Specially treated*4)	●	●	5 to 40	0.15 to 0.2
	2 Fluororesin-coated 	ZP2	Flat type with ribs	NBR + Fluororesin coating	●	●	5 to 60	0.1
				FKM + Fluororesin coating	●	●	5 to 100	
	3 Resin attachment 	ZP2	Applicable for the bellows type	PEEK	●	●	5 to 40	0.15 to 0.2
				Conductive PEEK (Volume resistivity: $1\times10^6\,\Omega$cm)	●	●		
	4 Non-contact gripper 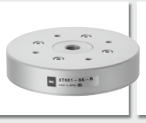			—	●	●	Standard: −5 to 60 (No freezing)	—
Standard	ZP Series (Standard material) 			NBR FKM Conductive NBR/ Silicone rubber	×	×	—	—
				Silicone rubber Urethane rubber	○	×		

Adsorption mark characteristics [●: Little or no influence ○: Can be used depending on the conditions ×: Not suitable]

*1 **Adsorption mark** ——— Indicates the transfer of rubber constituents from the pad
*2 **Condition** ——— Visual evaluation of the adsorption mark
*3 **Vapor method** ——— Method of applying vapor to workpieces to visually check for adsorption marks
*4 **Specially treated** ——— The NBR is specially treated to modify and reduce the transfer of rubber constituents.
*5 **Static friction ratio** ——— Static friction ratio when a workpiece (glass) is adsorbed by the pad (NBR = 1 as a benchmark)
When a cyclone pad is used, the pad does not come into contact with workpieces (glass).
The customer needs to install a guide for holding.

* The above table is only for reference when selecting a pad.
Values and evaluation are reference data only. Preparatory testing under actual operating conditions is recommended.

Cleaning method [Mark-free NBR pad/Fluororesin-coated pad/Resin attachment]

• Always clean the product before operation and when carrying out regular maintenance.
1) Hold a part other than the adsorption surface.
* Non particle-generating vinyl gloves are recommended.
2) Soak a non particle-generating cloth in 2-propanol (isopropyl alcohol) (purity > 99.5%).
* Please use the solution recommended above.
3) Wipe the adsorption surface (pad/resin attachment) and the part that comes into contact with workpieces.
4) Dry with clean air blow. (Or, wipe again with a dry, non particle-generating cloth.)



Mark-free Pad

Pad diameter ø4, ø6, ø8, ø10, ø16, ø25, ø32, ø40, ø50

Symbol/Form

U: Flat type

- **Pad which reduces the number of adsorption marks left on workpieces by the rubber**
- **The pad is made from mark-free NBR, and the NBR is then specially treated to minimize the transfer of rubber constituents to workpieces.**

The mounting bracket assembly (adapter, buffer) is the same as that of the ZP series.
Refer to the following pages and order it separately.

Mounting Bracket Part Nos.

Adapter Assembly	p. 121 to 123
Buffer Assembly	p. 124 to 126
Lock Ring Unit	p. 31

How to Order



Pad unit **ZP2 – 04 U CL – X19**

∗ Pad unit's sales unit: 10 pcs.

Pad diameter

Symbol	Pad diameter
04	ø4
06	ø6
08	ø8
10	ø10
16	ø16
25	ø25
32	ø32
40	ø40
50	ø50

With/Without lock ring

Nil	With lock ring
X19	Without lock ring *1

∗1 ø10 or larger

Pad material

Symbol	Material
CL	Mark-free NBR

Pad form

Symbol	Form
U	Flat type

∗ The lock ring is shipped together but does not come assembled.

Dimensions: Pad Unit

∗ The dimensions of the model with a mounting bracket are the same as those of the ZP series. Refer to the following pages.

With Adapter	p. 33 to 42
With Buffer	p. 43 to 49

ZP2-04 to 08UCL

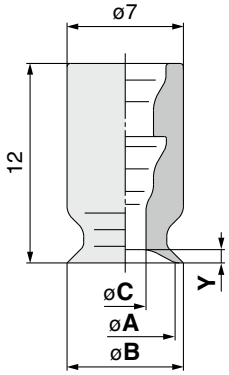

Dimensions

Model	A	B	C	Y
ZP2-04UCL	4	4.8	1.6	0.8
ZP2-06UCL	6	7	2.5	
ZP2-08UCL	8	9		1

ZP2-10 to 50UCL

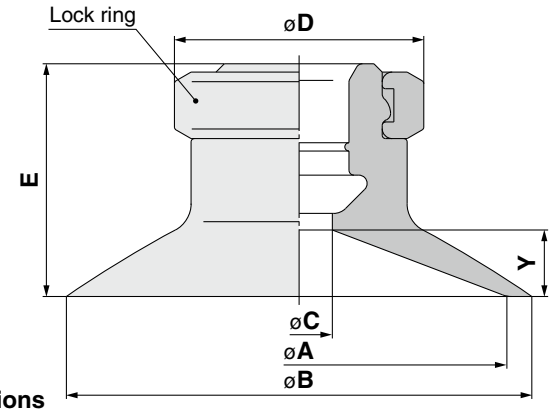

Dimensions

Model	A	B	C	D	E	Y
ZP2-10UCL	10	12	4	13	12	3
ZP2-16UCL	16	18			12.5	3.5
ZP2-25UCL	25	28		15	14	4
ZP2-32UCL	32	35			14.5	4.5
ZP2-40UCL	40	43	7	18	18.5	6.5
ZP2-50UCL	50	53			19.5	7.5

Adapter Mounting Dimensions

If an adapter will be made by the customer, design the adapter with the dimensions shown below.

Applicable pad 04U/06U/08U

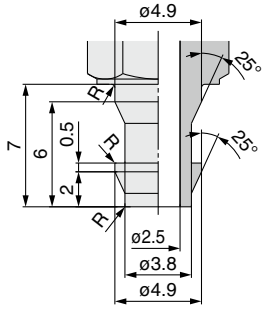

Applicable pad 10U/16U

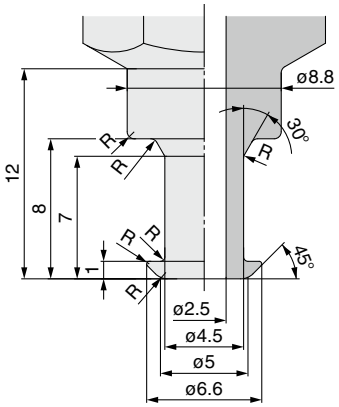

Applicable pad 25U/32U

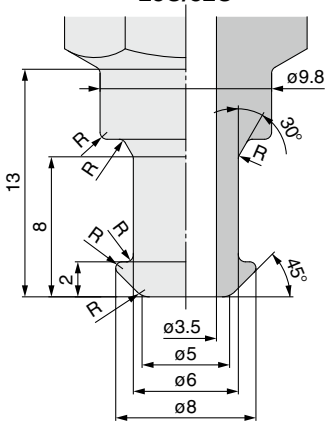

Applicable pad 40U/50U

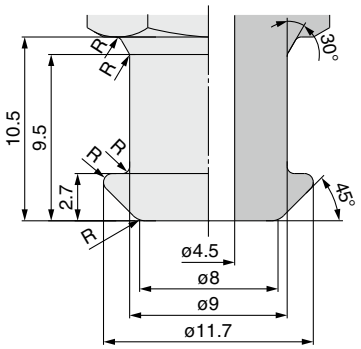

∗ The R part has to be smooth with no corners.

Mark-free Pad/High Rigidity

Pad diameter ø40, ø50, ø63, ø80, ø100, ø125

Symbol/Form

H: Flat type with ribs

- **Pad which reduces the number of adsorption marks left on workpieces by the rubber**
- **The pad is made from mark-free NBR, and the NBR is then specially treated to minimize the transfer of rubber constituents to workpieces.**
- **Prevents the rubber constituents of the pad from transferring to workpieces by baking a fluororesin sheet to the adsorption surface**

For the mounting bracket assembly, refer to the following pages and order it separately.

Mounting Bracket Part Nos./Dimensions

Adapter Assembly	p. 255, 256
Buffer Assembly	p. 257 to 260
Ball Joint Type	p. 261 to 263

How to Order

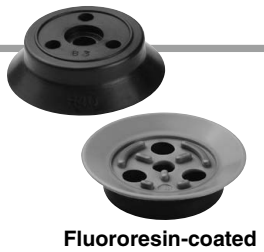

Fluororesin-coated

Pad unit **ZP2 − 40 H CL**

Pad diameter

Symbol	Pad diameter
40	ø40
50	ø50
63	ø63
80	ø80
100	ø100
125	ø125

Pad form

Symbol	Form
H	High rigidity (Flat type with ribs)

Pad material

Symbol	Material
CL	Mark-free NBR
NT	NBR + Fluororesin coating
FT	FKM + Fluororesin coating

Dimensions: Pad Unit

ZP2-$^{40}_{50}$H□

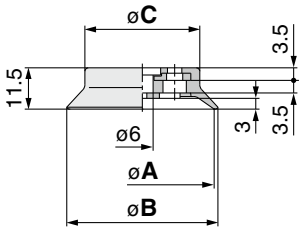

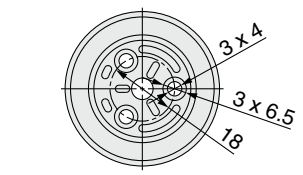

Dimensions

Model	A	B	C
ZP2-40H□	40	42	32
ZP2-50H□	50	53	42

ZP2-$^{63}_{80}$H□

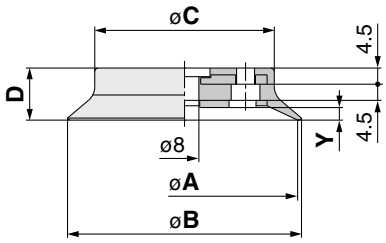

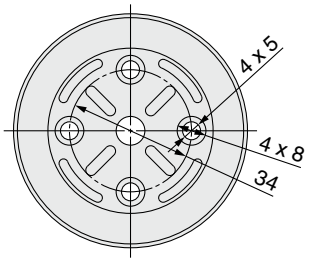

Dimensions

Model	A	B	C	D	Y
ZP2-63H□	63	65	50	14.5	3.5
ZP2-80H□	80	82	61	16.5	4.5

ZP2-$^{100}_{125}$H□

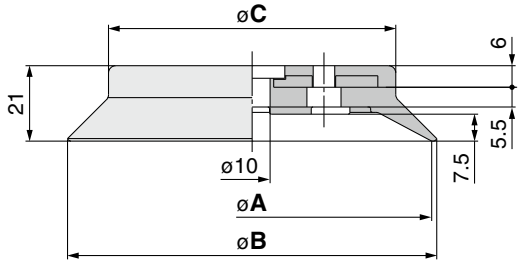

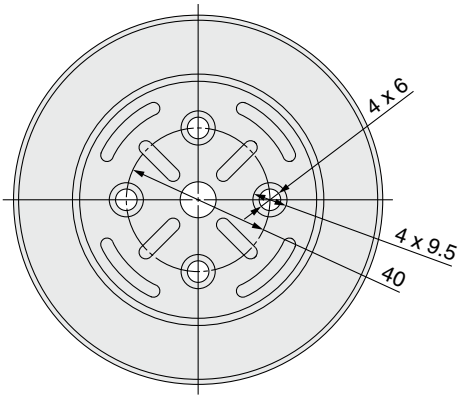

Dimensions

Model	A	B	C
ZP2-100H□	100	103	80
ZP2-125H□	125	128	104

Mark-free Pad/High Rigidity *ZP2 Series*
Mounting Bracket Assembly

Adapter Assembly

Adapter assembly part no.	Applicable pad part no.
ZPA-T1-B8	**ZP2-40H(CL/NT/FT)** **ZP2-50H(CL/NT/FT)** **ZP2-3050HW**
ZPA-T1-B10	

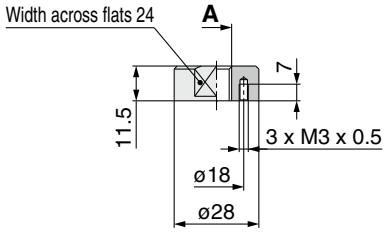

Dimensions

Part no.	A
ZPA-T1-B8	M8 x 1.25
ZPA-T1-B10	M10 x 1.5

∗ With three M3 bolts

Adapter assembly part no.	Applicable pad part no.
ZPA-T1-B01	**ZP2-40H(CL/NT/FT)** **ZP2-50H(CL/NT/FT)** **ZP2-3050HW**
ZPA-T1-N01	
ZPA-T1-T01	

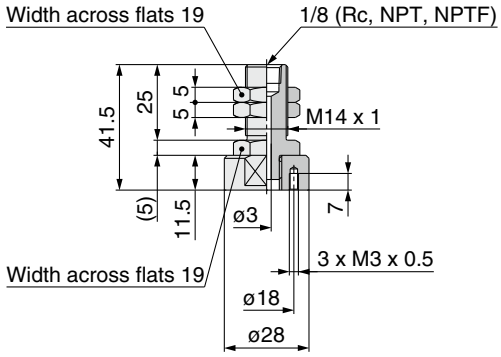

∗ With three M3 bolts

Adapter assembly part no.	Applicable pad part no.
ZPA-T2-B8	**ZP2-63H(CL/NT/FT)** **ZP2-80H(CL/NT/FT)**
ZPA-T2-B10	
ZPA-T2-B12	
ZPA-T2-B16	

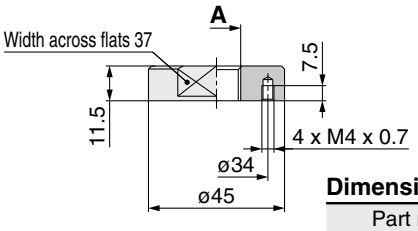

Dimensions

Part no.	A
ZPA-T2-B8	M8 x 1.25
ZPA-T2-B10	M10 x 1.5
ZPA-T2-B12	M12 x 1.75
ZPA-T2-B16	M16 x 1.5

∗ With four M4 bolts

Adapter assembly part no.	Applicable pad part no.
ZPA-T2-B01	**ZP2-63H(CL/NT/FT)** **ZP2-80H(CL/NT/FT)**
ZPA-T2-N01	
ZPA-T2-T01	

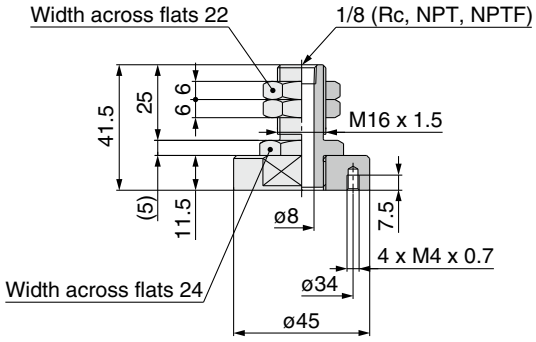

∗ With four M4 bolts

Adapter assembly part no.	Applicable pad part no.
ZPA-T3-B12	**ZP2-100H(CL/NT/FT)** **ZP2-125H(CL/NT/FT)**
ZPA-T3-B16	

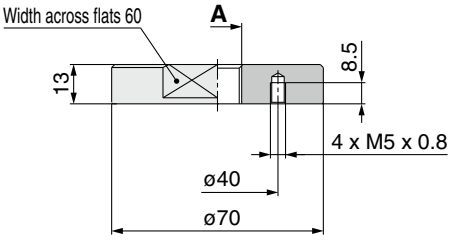

Dimensions

Part no.	A
ZPA-T3-B12	M12 x 1.75
ZPA-T3-B16	M16 x 1.5

∗ With four M5 bolts

Adapter assembly part no.	Applicable pad part no.
ZPA-T3-B01	**ZP2-100H(CL/NT/FT)** **ZP2-125H(CL/NT/FT)**
ZPA-T3-N01	
ZPA-T3-T01	

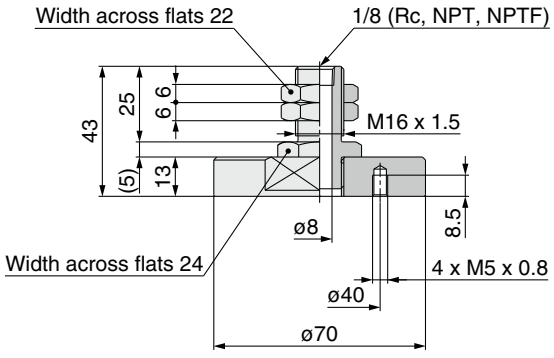

∗ With four M5 bolts

Adapter Assembly

Adapter assembly part no.	Applicable pad part no.
ZPA-X1-B01-B8	**ZP2-40H(CL/NT/FT)** **ZP2-50H(CL/NT/FT)** **ZP2-3050HW**
ZPA-X1-N01-B8	
ZPA-X1-T01-B8	
ZPA-X1-B01-B10	
ZPA-X1-N01-B10	
ZPA-X1-T01-B10	

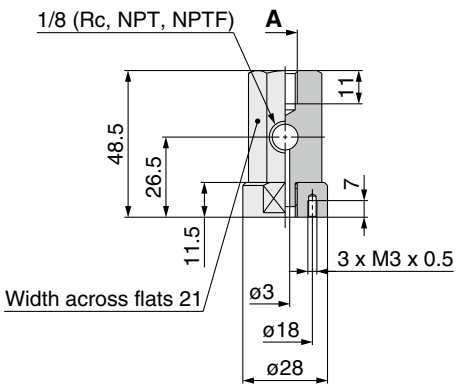

Dimensions

Part no.	A
ZPA-X1-□01-B8	M8 x 1.25
ZPA-X1-□01-B10	M10 x 1.5

∗ With three M3 bolts

Adapter assembly part no.	Applicable pad part no.
ZPA-X3-B01-B10	**ZP2-100H(CL/NT/FT)** **ZP2-125H(CL/NT/FT)**
ZPA-X3-N01-B10	
ZPA-X3-T01-B10	
ZPA-X3-B01-B12	
ZPA-X3-N01-B12	
ZPA-X3-T01-B12	

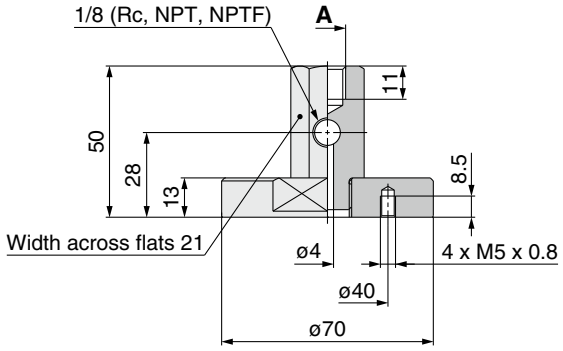

Dimensions

Part no.	A
ZPA-X3-□01-B10	M10 x 1.5
ZPA-X3-□01-B12	M12 x 1.75

∗ With four M5 bolts

Adapter assembly part no.	Applicable pad part no.
ZPA-X2-B01-B10	**ZP2-63H(CL/NT/FT)** **ZP2-80H(CL/NT/FT)**
ZPA-X2-N01-B10	
ZPA-X2-T01-B10	
ZPA-X2-B01-B12	
ZPA-X2-N01-B12	
ZPA-X2-T01-B12	

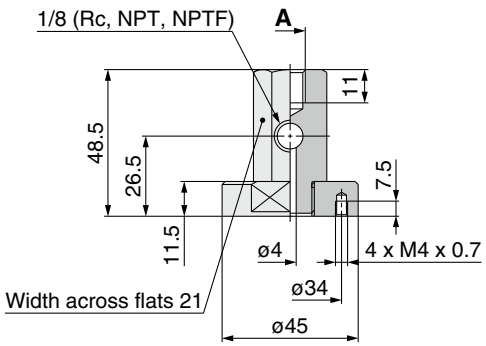

Dimensions

Part no.	A
ZPA-X2-□01-B10	M10 x 1.5
ZPA-X2-□01-B12	M12 x 1.75

∗ With four M4 bolts

Buffer Assembly

∗ Refer to page 343 for nut tightening torque.

Buffer assembly part no. Buffer body (Material: Aluminum alloy)
ZPB-T1J25-B01
ZPB-T1J25-N01
ZPB-T1J25-T01
ZPB-T1J50-B01
ZPB-T1J50-N01
ZPB-T1J50-T01
ZPB-T1J75-B01
ZPB-T1J75-N01
ZPB-T1J75-T01

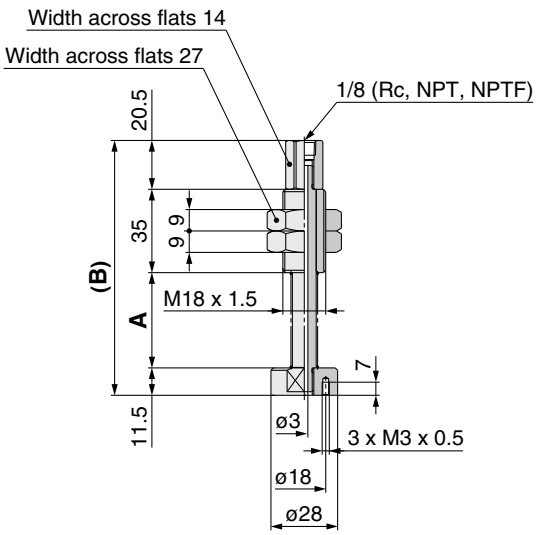

Applicable pad part no.

ZP2-40H(CL/NT/FT)
ZP2-50H(CL/NT/FT)
ZP2-3050HW

Dimensions

Part no.	A	B
ZPB-T1J25-□01	40	107
ZPB-T1J50-□01	75	142
ZPB-T1J75-□01	111	178

∗ With three M3 bolts

Buffer assembly part no. Buffer body (Material: Aluminum alloy)
ZPB-T2J25-B01
ZPB-T2J25-N01
ZPB-T2J25-T01
ZPB-T2J50-B01
ZPB-T2J50-N01
ZPB-T2J50-T01
ZPB-T2J75-B01
ZPB-T2J75-N01
ZPB-T2J75-T01

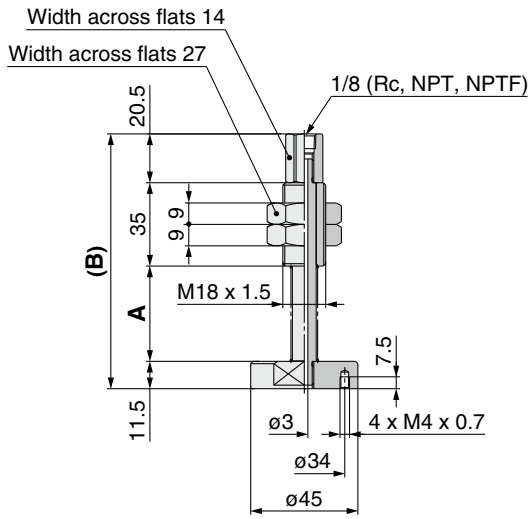

Applicable pad part no.

ZP2-63H(CL/NT/FT)
ZP2-80H(CL/NT/FT)

Dimensions

Part no.	A	B
ZPB-T2J25-□01	40	107
ZPB-T2J50-□01	75	142
ZPB-T2J75-□01	111	178

∗ With four M4 bolts

Buffer assembly part no. Buffer body (Material: Aluminum alloy)
ZPB-T3J25-B01
ZPB-T3J25-N01
ZPB-T3J25-T01
ZPB-T3J50-B01
ZPB-T3J50-N01
ZPB-T3J50-T01
ZPB-T3J75-B01
ZPB-T3J75-N01
ZPB-T3J75-T01
ZPB-T3J100-B01
ZPB-T3J100-N01
ZPB-T3J100-T01

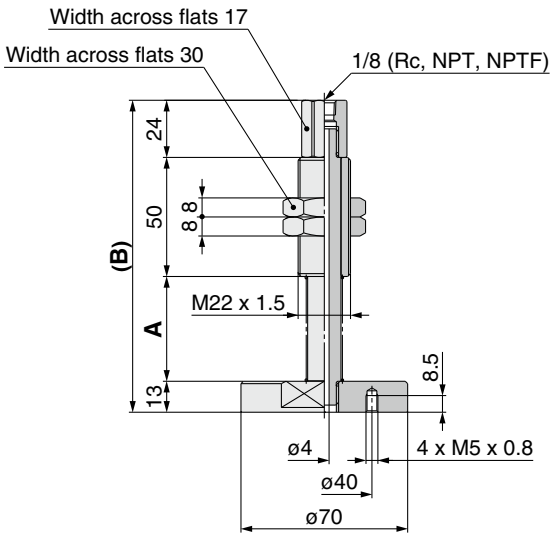

Applicable pad part no.

ZP2-100H(CL/NT/FT)
ZP2-125H(CL/NT/FT)

Dimensions

Part no.	A	B
ZPB-T3J25-□01	44	131
ZPB-T3J50-□01	80	167
ZPB-T3J75-□01	120	207
ZPB-T3J100-□01	155	242

∗ With four M5 bolts

Buffer Assembly

∗ Refer to page 343 for nut tightening torque.

Buffer assembly part no.	
Buffer body (Material: Brass)	Buffer body (Material: Structural steel)
ZPB-T1JB25-B01	**ZPB-T1JF25-B01**
ZPB-T1JB25-N01	**ZPB-T1JF25-N01**
ZPB-T1JB25-T01	**ZPB-T1JF25-T01**
ZPB-T1JB50-B01	**ZPB-T1JF50-B01**
ZPB-T1JB50-N01	**ZPB-T1JF50-N01**
ZPB-T1JB50-T01	**ZPB-T1JF50-T01**
ZPB-T1JB75-B01	**ZPB-T1JF75-B01**
ZPB-T1JB75-N01	**ZPB-T1JF75-N01**
ZPB-T1JB75-T01	**ZPB-T1JF75-T01**

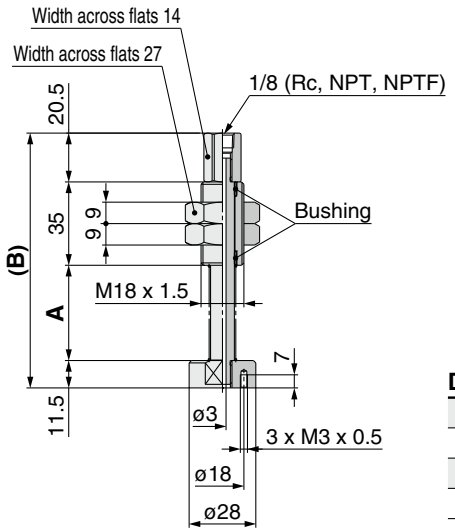

Applicable pad part no.
ZP2-40H(CL/NT/FT)
ZP2-50H(CL/NT/FT)
ZP2-3050HW

Dimensions

Part no.	A	B
ZPB-T1(JB/JF)25-□01	40	107
ZPB-T1(JB/JF)50-□01	75	142
ZPB-T1(JB/JF)75-□01	111	178

∗ With three M3 bolts

Buffer assembly part no.	
Buffer body (Material: Brass)	Buffer body (Material: Structural steel)
ZPB-T2JB25-B01	**ZPB-T2JF25-B01**
ZPB-T2JB25-N01	**ZPB-T2JF25-N01**
ZPB-T2JB25-T01	**ZPB-T2JF25-T01**
ZPB-T2JB50-B01	**ZPB-T2JF50-B01**
ZPB-T2JB50-N01	**ZPB-T2JF50-N01**
ZPB-T2JB50-T01	**ZPB-T2JF50-T01**
ZPB-T2JB75-B01	**ZPB-T2JF75-B01**
ZPB-T2JB75-N01	**ZPB-T2JF75-N01**
ZPB-T2JB75-T01	**ZPB-T2JF75-T01**

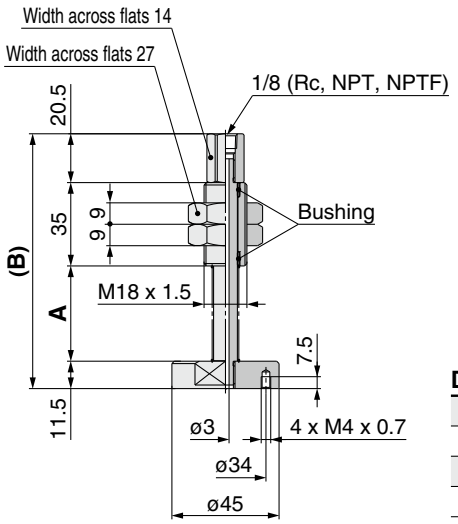

Applicable pad part no.
ZP2-63H(CL/NT/FT)
ZP2-80H(CL/NT/FT)

Dimensions

Part no.	A	B
ZPB-T2(JB/JF)25-□01	40	107
ZPB-T2(JB/JF)50-□01	75	142
ZPB-T2(JB/JF)75-□01	111	178

∗ With four M4 bolts

Buffer assembly part no.	
Buffer body (Material: Brass)	Buffer body (Material: Structural steel)
ZPB-T3JB25-B01	**ZPB-T3JF25-B01**
ZPB-T3JB25-N01	**ZPB-T3JF25-N01**
ZPB-T3JB25-T01	**ZPB-T3JF25-T01**
ZPB-T3JB50-B01	**ZPB-T3JF50-B01**
ZPB-T3JB50-N01	**ZPB-T3JF50-N01**
ZPB-T3JB50-T01	**ZPB-T3JF50-T01**
ZPB-T3JB75-B01	**ZPB-T3JF75-B01**
ZPB-T3JB75-N01	**ZPB-T3JF75-N01**
ZPB-T3JB75-T01	**ZPB-T3JF75-T01**
ZPB-T3JB100-B01	**ZPB-T3JF100-B01**
ZPB-T3JB100-N01	**ZPB-T3JF100-N01**
ZPB-T3JB100-T01	**ZPB-T3JF100-T01**

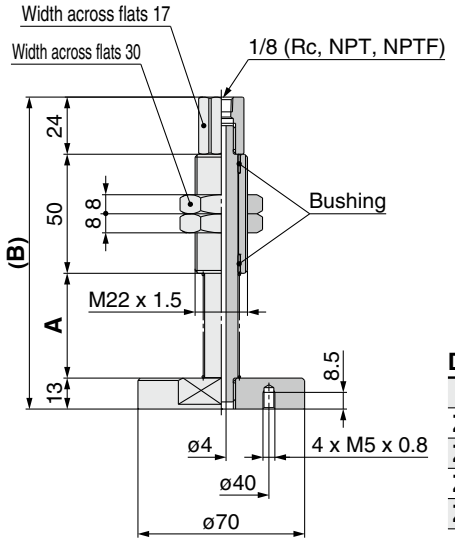

Applicable pad part no.
ZP2-100H(CL/NT/FT)
ZP2-125H(CL/NT/FT)

Dimensions

Part no.	A	B
ZPB-T3(JB/JF)25-□01	44	131
ZPB-T3(JB/JF)50-□01	80	167
ZPB-T3(JB/JF)75-□01	120	207
ZPB-T3(JB/JF)100-□01	155	242

∗ With four M5 bolts

Buffer Assembly

∗ Refer to page 343 for nut tightening torque.

Buffer assembly part no.
Buffer body (Material: Aluminum alloy)
ZPB-X1J25-B01
ZPB-X1J25-N01
ZPB-X1J25-T01
ZPB-X1J50-B01
ZPB-X1J50-N01
ZPB-X1J50-T01
ZPB-X1J75-B01
ZPB-X1J75-N01
ZPB-X1J75-T01

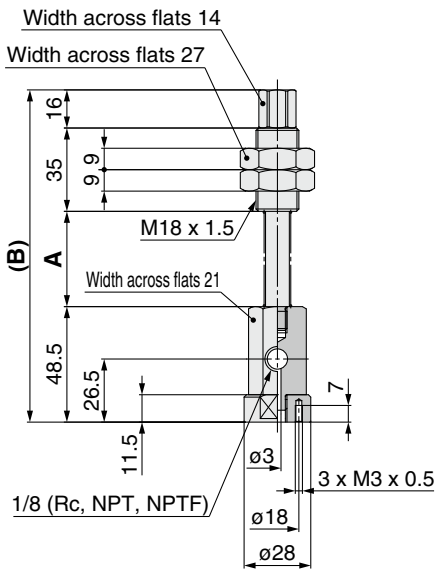

Applicable pad part no.
ZP2-40H(CL/NT/FT)
ZP2-50H(CL/NT/FT)
ZP2-3050HW

Dimensions

Part no.	A	B
ZPB-X1J25-□01	40	139.5
ZPB-X1J50-□01	75	174.5
ZPB-X1J75-□01	111	210.5

∗ With three M3 bolts

Buffer assembly part no.
Buffer body (Material: Aluminum alloy)
ZPB-X2J25-B01
ZPB-X2J25-N01
ZPB-X2J25-T01
ZPB-X2J50-B01
ZPB-X2J50-N01
ZPB-X2J50-T01
ZPB-X2J75-B01
ZPB-X2J75-N01
ZPB-X2J75-T01

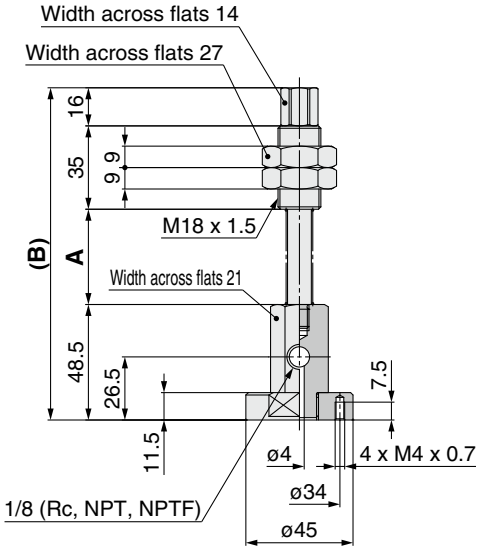

Applicable pad part no.
ZP2-63H(CL/NT/FT)
ZP2-80H(CL/NT/FT)

Dimensions

Part no.	A	B
ZPB-X2J25-□01	40	139.5
ZPB-X2J50-□01	75	174.5
ZPB-X2J75-□01	111	210.5

∗ With four M4 bolts

Buffer assembly part no.
Buffer body (Material: Aluminum alloy)
ZPB-X3J25-B01
ZPB-X3J25-N01
ZPB-X3J25-T01
ZPB-X3J50-B01
ZPB-X3J50-N01
ZPB-X3J50-T01
ZPB-X3J75-B01
ZPB-X3J75-N01
ZPB-X3J75-T01
ZPB-X3J100-B01
ZPB-X3J100-N01
ZPB-X3J100-T01

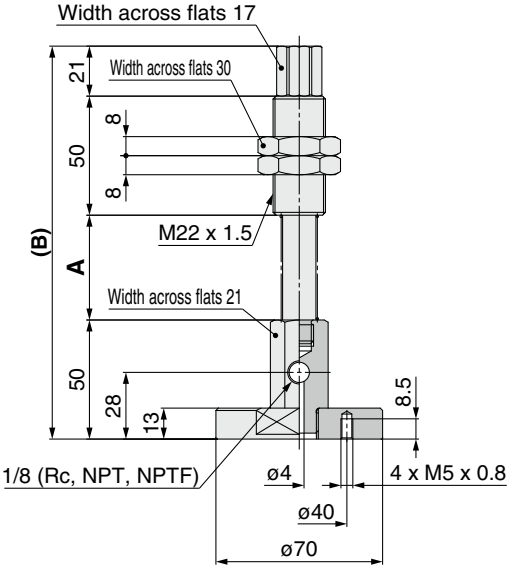

Applicable pad part no.
ZP2-100H(CL/NT/FT)
ZP2-125H(CL/NT/FT)

Dimensions

Part no.	A	B
ZPB-X3J25-□01	44	165
ZPB-X3J50-□01	80	201
ZPB-X3J75-□01	120	241
ZPB-X3J100-□01	155	276

∗ With four M5 bolts

Buffer Assembly

∗ Refer to page 343 for nut tightening torque.

Buffer assembly part no.	
Buffer body (Material: Brass)	Buffer body (Material: Structural steel)
ZPB-X1JB25-B01	**ZPB-X1JF25-B01**
ZPB-X1JB25-N01	**ZPB-X1JF25-N01**
ZPB-X1JB25-T01	**ZPB-X1JF25-T01**
ZPB-X1JB50-B01	**ZPB-X1JF50-B01**
ZPB-X1JB50-N01	**ZPB-X1JF50-N01**
ZPB-X1JB50-T01	**ZPB-X1JF50-T01**
ZPB-X1JB75-B01	**ZPB-X1JF75-B01**
ZPB-X1JB75-N01	**ZPB-X1JF75-N01**
ZPB-X1JB75-T01	**ZPB-X1JF75-T01**

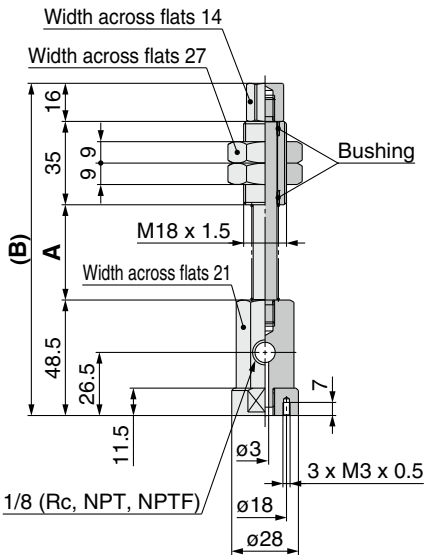

Applicable pad part no.
ZP2-40H(CL/NT/FT)
ZP2-50H(CL/NT/FT)
ZP2-3050HW

Dimensions

Part no.	A	B
ZPB-X1(JB/JF)25-□01	40	139.5
ZPB-X1(JB/JF)50-□01	75	174.5
ZPB-X1(JB/JF)75-□01	111	210.5

∗ With three M3 bolts

Buffer assembly part no.	
Buffer body (Material: Brass)	Buffer body (Material: Structural steel)
ZPB-X2JB25-B01	**ZPB-X2JF25-B01**
ZPB-X2JB25-N01	**ZPB-X2JF25-N01**
ZPB-X2JB25-T01	**ZPB-X2JF25-T01**
ZPB-X2JB50-B01	**ZPB-X2JF50-B01**
ZPB-X2JB50-N01	**ZPB-X2JF50-N01**
ZPB-X2JB50-T01	**ZPB-X2JF50-T01**
ZPB-X2JB75-B01	**ZPB-X2JF75-B01**
ZPB-X2JB75-N01	**ZPB-X2JF75-N01**
ZPB-X2JB75-T01	**ZPB-X2JF75-T01**

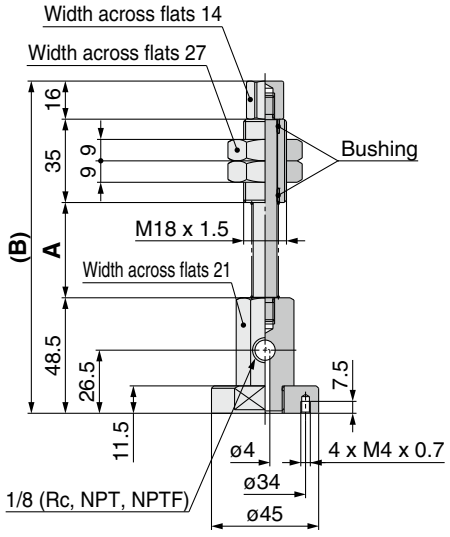

Applicable pad part no.
ZP2-63H(CL/NT/FT)
ZP2-80H(CL/NT/FT)

Dimensions

Part no.	A	B
ZPB-X2(JB/JF)25-□01	40	139.5
ZPB-X2(JB/JF)50-□01	75	174.5
ZPB-X2(JB/JF)75-□01	111	210.5

∗ With four M4 bolts

Buffer assembly part no.	
Buffer body (Material: Brass)	Buffer body (Material: Structural steel)
ZPB-X3JB25-B01	**ZPB-X3JF25-B01**
ZPB-X3JB25-N01	**ZPB-X3JF25-N01**
ZPB-X3JB25-T01	**ZPB-X3JF25-T01**
ZPB-X3JB50-B01	**ZPB-X3JF50-B01**
ZPB-X3JB50-N01	**ZPB-X3JF50-N01**
ZPB-X3JB50-T01	**ZPB-X3JF50-T01**
ZPB-X3JB75-B01	**ZPB-X3JF75-B01**
ZPB-X3JB75-N01	**ZPB-X3JF75-N01**
ZPB-X3JB75-T01	**ZPB-X3JF75-T01**
ZPB-X3JB100-B01	**ZPB-X3JF100-B01**
ZPB-X3JB100-N01	**ZPB-X3JF100-N01**
ZPB-X3JB100-T01	**ZPB-X3JF100-T01**

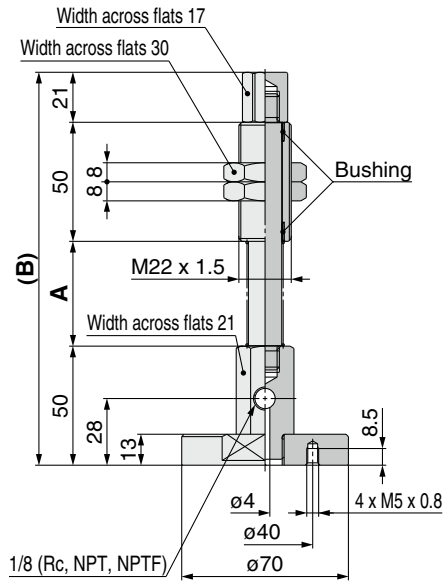

Applicable pad part no.
ZP2-100H(CL/NT/FT)
ZP2-125H(CL/NT/FT)

Dimensions

Part no.	A	B
ZPB-X3(JB/JF)25-□01	44	165
ZPB-X3(JB/JF)50-□01	80	201
ZPB-X3(JB/JF)75-□01	120	241
ZPB-X3(JB/JF)100-□01	155	276

∗ With four M5 bolts

Mounting Bracket Assembly

Adapter Assembly

Adapter assembly part no.	Applicable pad part no.
ZP2A-TF1	**ZP2-40H(CL/NT/FT)** **ZP2-50H(CL/NT/FT)** **ZP2-3050HW**

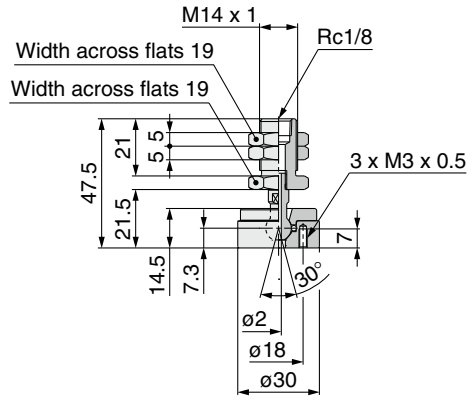

∗ With three M3 bolts

Adapter assembly part no.	Applicable pad part no.
ZP2A-XF1	**ZP2-40H(CL/NT/FT)** **ZP2-50H(CL/NT/FT)** **ZP2-3050HW**

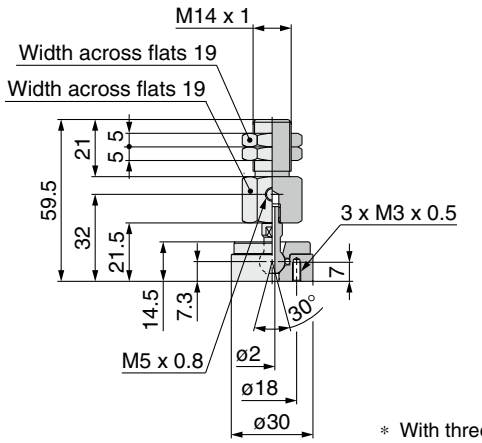

∗ With three M3 bolts

Adapter assembly part no.	Applicable pad part no.
ZP2A-TF2	**ZP2-63H(CL/NT/FT)** **ZP2-80H(CL/NT/FT)**

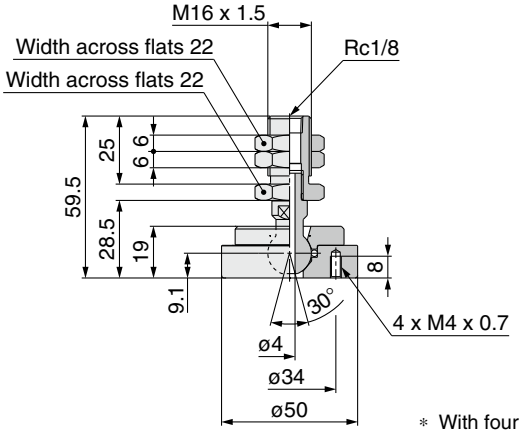

∗ With four M4 bolts

Adapter assembly part no.	Applicable pad part no.
ZP2A-XF2	**ZP2-63H(CL/NT/FT)** **ZP2-80H(CL/NT/FT)**

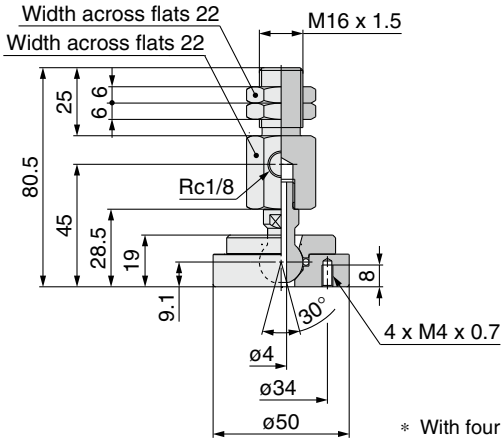

∗ With four M4 bolts

Adapter assembly part no.	Applicable pad part no.
ZP2A-TF3	**ZP2-100H(CL/NT/FT)** **ZP2-125H(CL/NT/FT)**

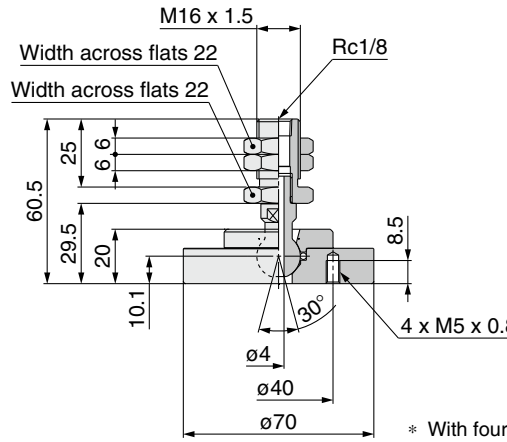

∗ With four M5 bolts

Adapter assembly part no.	Applicable pad part no.
ZP2A-XF3	**ZP2-100H(CL/NT/FT)** **ZP2-125H(CL/NT/FT)**

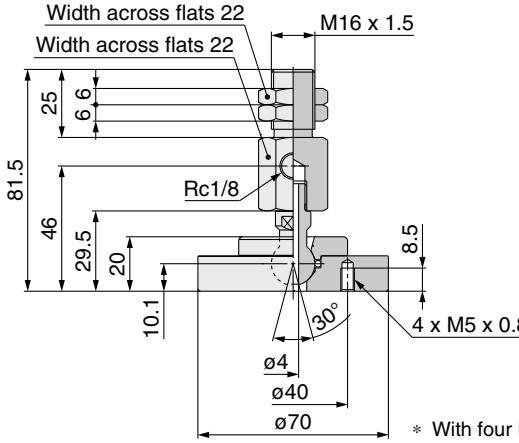

∗ With four M5 bolts

Buffer Assembly

* Refer to page 343 for nut tightening torque.

Buffer assembly part no.	
Buffer body (Material: Brass)	Buffer body (Material: Structural steel)
ZP2B-TF1JB25	**ZP2B-TF1JF25**
ZP2B-TF1JB50	**ZP2B-TF1JF50**
ZP2B-TF1JB75	**ZP2B-TF1JF75**

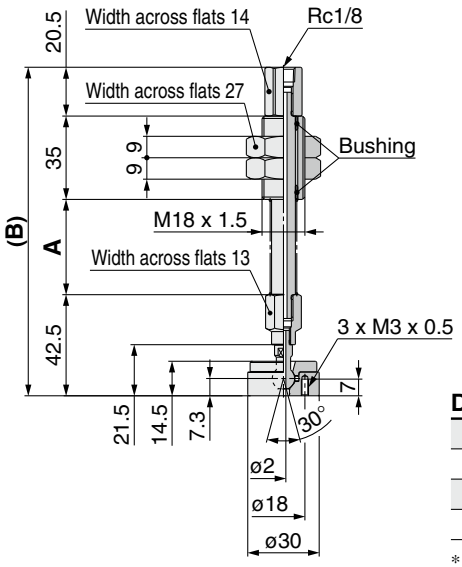

Applicable pad part no.
ZP2-40H(CL/NT/FT)
ZP2-50H(CL/NT/FT)
ZP2-3050HW

Dimensions

Part no.	A	B
ZP2B-TF1(JB/JF)25	40	138
ZP2B-TF1(JB/JF)50	75	173
ZP2B-TF1(JB/JF)75	111	209

* With three M3 bolts

Buffer assembly part no.	
Buffer body (Material: Brass)	Buffer body (Material: Structural steel)
ZP2B-TF2JB25	**ZP2B-TF2JF25**
ZP2B-TF2JB50	**ZP2B-TF2JF50**
ZP2B-TF2JB75	**ZP2B-TF2JF75**
ZP2B-TF2JB100	**ZP2B-TF2JF100**

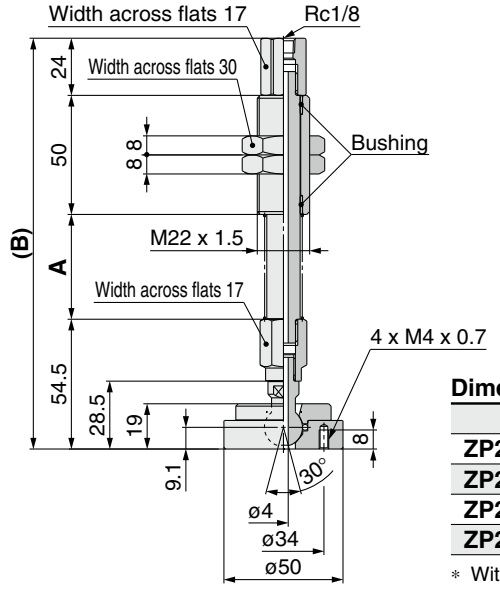

Applicable pad part no.
ZP2-63H(CL/NT/FT)
ZP2-80H(CL/NT/FT)

Dimensions

Part no.	A	B
ZP2B-TF2(JB/JF)25	44	172.5
ZP2B-TF2(JB/JF)50	80	208.5
ZP2B-TF2(JB/JF)75	120	248.5
ZP2B-TF2(JB/JF)100	155	283.5

* With four M4 bolts

Buffer assembly part no.	
Buffer body (Material: Brass)	Buffer body (Material: Structural steel)
ZP2B-TF3JB25	**ZP2B-TF3JF25**
ZP2B-TF3JB50	**ZP2B-TF3JF50**
ZP2B-TF3JB75	**ZP2B-TF3JF75**
ZP2B-TF3JB100	**ZP2B-TF3JF100**

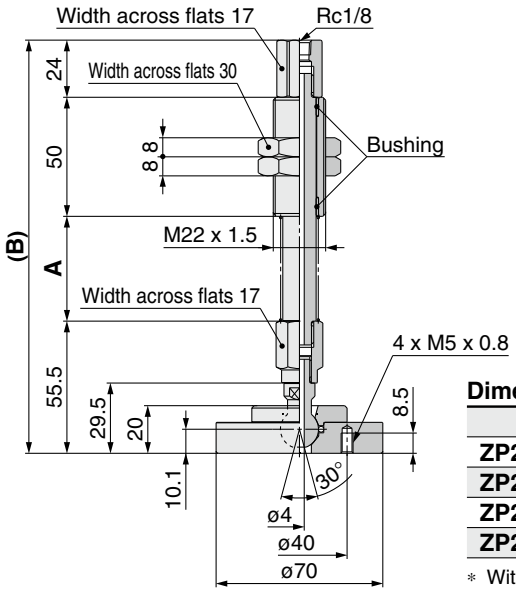

Applicable pad part no.
ZP2-100H(CL/NT/FT)
ZP2-125H(CL/NT/FT)

Dimensions

Part no.	A	B
ZP2B-TF3(JB/JF)25	44	173.5
ZP2B-TF3(JB/JF)50	80	209.5
ZP2B-TF3(JB/JF)75	120	249.5
ZP2B-TF3(JB/JF)100	155	284.5

* With four M5 bolts

Buffer Assembly

* Refer to page 343 for nut tightening torque.

Buffer assembly part no.	
Buffer body (Material: Brass)	Buffer body (Material: Structural steel)
ZP2B-XF1JB25	**ZP2B-XF1JF25**
ZP2B-XF1JB50	**ZP2B-XF1JF50**
ZP2B-XF1JB75	**ZP2B-XF1JF75**

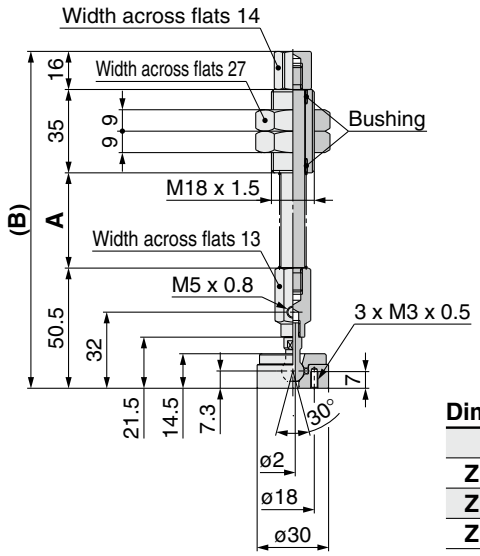

Applicable pad part no.
ZP2-40H(CL/NT/FT)
ZP2-50H(CL/NT/FT)
ZP2-3050HW

Dimensions

Part no.	A	B
ZP2B-XF1(JB/JF)25	40	141.5
ZP2B-XF1(JB/JF)50	75	176.5
ZP2B-XF1(JB/JF)75	111	212.5

* With three M3 bolts

Buffer assembly part no.	
Buffer body (Material: Brass)	Buffer body (Material: Structural steel)
ZP2B-XF2JB25	**ZP2B-XF2JF25**
ZP2B-XF2JB50	**ZP2B-XF2JF50**
ZP2B-XF2JB75	**ZP2B-XF2JF75**
ZP2B-XF2JB100	**ZP2B-XF2JF100**

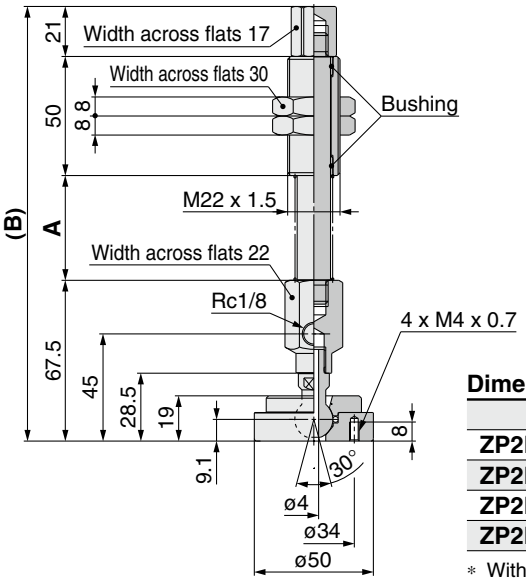

Applicable pad part no.
ZP2-63H(CL/NT/FT)
ZP2-80H(CL/NT/FT)

Dimensions

Part no.	A	B
ZP2B-XF2(JB/JF)25	44	182.5
ZP2B-XF2(JB/JF)50	80	218.5
ZP2B-XF2(JB/JF)75	120	258.5
ZP2B-XF2(JB/JF)100	155	293.5

* With four M4 bolts

Buffer assembly part no.	
Buffer body (Material: Brass)	Buffer body (Material: Structural steel)
ZP2B-XF3JB25	**ZP2B-XF3JF25**
ZP2B-XF3JB50	**ZP2B-XF3JF50**
ZP2B-XF3JB75	**ZP2B-XF3JF75**
ZP2B-XF3JB100	**ZP2B-XF3JF100**

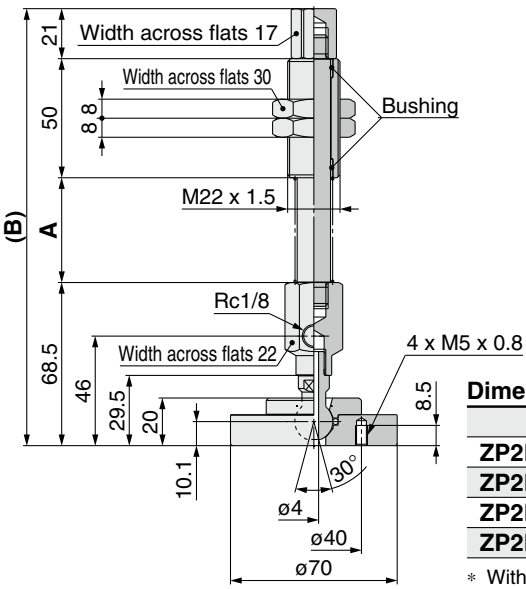

Applicable pad part no.
ZP2-100H(CL/NT/FT)
ZP2-125H(CL/NT/FT)

Dimensions

Part no.	A	B
ZP2B-XF3(JB/JF)25	44	183.5
ZP2B-XF3(JB/JF)50	80	219.5
ZP2B-XF3(JB/JF)75	120	259.5
ZP2B-XF3(JB/JF)100	155	294.5

* With four M5 bolts

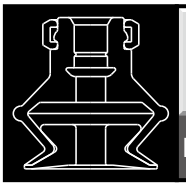

Resin Attachment

Pad diameter ø6, ø8, ø10, ø13, ø16, ø20, ø25, ø32

■ No adsorption marks (rubber constituents) are left on workpieces.

Direct contact between workpieces and the rubber can be avoided by mounting a PEEK attachment inside the bellows pad to prevent the transfer of rubber constituents.

■ Prevents the pad (rubber) from sticking to workpieces

■ Ideal for the bellows pad ZP series (ø6 to ø32)

The mounting bracket assembly (adapter) is the same as that of the ZP series. Refer to the following pages and order it separately.

Mounting Bracket Part Nos.

Adapter Assembly	p. 121 to 123



How to Order

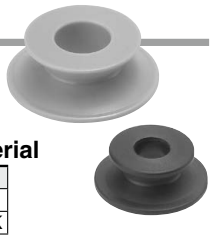

ZP2 – 06 K P

Pad diameter

Symbol	Applicable pad
06	ZP06B□
08	ZP08B□
10	ZP10B□
13	ZP13B□
16	ZP16B□
20	ZP20B□
25	ZP25B□
32	ZP32B□

Attachment material

Symbol	Material
P	PEEK
GP	Conductive PEEK

∗ Sales unit: 10 pcs.

How to Order (When ordering with a pad)

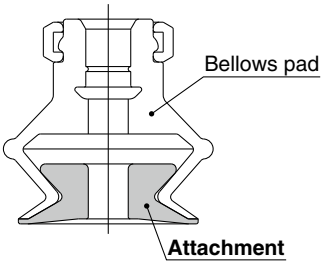

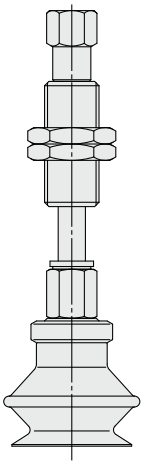

- When ordering with a pad, put "∗" below the part number of the pad as shown below. Note that the pad is not delivered with the attachment assembled.
- This attachment can only be mounted inside SMC's standard bellows pads.
- When the attachment is made of conductive PEEK, use conductive material for the pad.

Ordering example
ZPT10BNJ10-B5-A10 ← Bellows pad part no.
∗ ZP2-10KP ← Resin attachment part no.

Dimensions/Single Unit

∗ The dimensions of the mounting bracket are the same as the ZP series. Refer to the mounting bracket dimensions on the following pages.

With Adapter	p. 69 to 78

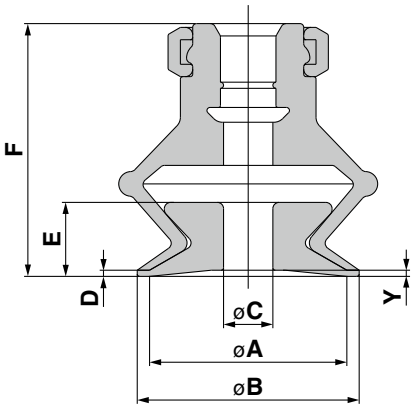

Dimensions

Model	Applicable pad	A	B	C	D	E	F	Y
ZP2-06K■	ZP06B□	6	7	1.6	0.5	3	13.5	0.5
ZP2-08K■	ZP08B□	8	9	3				
ZP2-10K■	ZP10B□	10	12	3.5		3.5	16.5	
ZP2-13K■	ZP13B□	13	15	4		5.5	19	
ZP2-16K■	ZP16B□	16	18			6	20.5	
ZP2-20K■	ZP20B□	20	22	8	1	8.5	24.5	1
ZP2-25K■	ZP25B□	25	27	10			25	
ZP2-32K■	ZP32B□	32	34			11.5	30	

∗ ■ in the table indicates the attachment material
∗ □ in the table indicates the pad material

«Precautions»

1) Clean the product before using the attachment.
This product is not cleaned before shipment. If the product is used in the condition in which it was shipped, residual material may be left on workpieces. Clean before use. If you have any questions, please contact SMC.
2) The workpiece contact part of this product is made of resin and, therefore, there may be more vacuum pressure leakage during adsorption compared to general rubber pads. Therefore, maintain as large a flow rate as possible to minimize the pressure drop due to leakage.
3) Cannot be used for vacuum retention
4) Customers are required to conduct an evaluation to judge whether or not the product should be used.

- If contact with hard material is a problem, do not use this product.

Pads for Special Applications/Mark-free Pad Specific Product Precautions

Be sure to read this before handling the products.
Refer to page 375 for safety instructions. For vacuum equipment and vacuum pad precautions, refer to pages 376 to 379.

Design

1. Although the adsorption marks (transfer of rubber components to workpieces) left by this product have been minimized compared with existing rubber pads, confirm whether the adsorption marks have any effect on the actual workpieces before use.
2. High vacuum pressure leaks from the lip may occur in the mark-free pad series due to the manufacturing method compared with common rubber pads.
3. Note that this product cannot be used to hold vacuum.
4. Secure as high a flow rate as possible to suppress the pressure effect caused by leakage to a minimum.
5. The fluororesin-coated pad is a molded product where a fluororesin sheet is integrated with the rubber (NBR, FKM). Therefore, the height of the product may decrease due to the deterioration of the rubber and elongation of the fluororesin sheet after repeated usage. This is caused by the pad coming into contact with workpieces vertically (load is applied equally to the pad skirt).

   For example, if the pad performs an operation where the shape changes as in the following conditions, the pad skirt may be come deformed.

   1) When the pad contacts a workpiece from a diagonal direction
   2) When a load cannot be applied equally to the pad due to the uneven surface of a workpiece, or the pad is pressed against an irregularly shaped workpiece for adsorption
   3) When the pad is used in a stretched condition due to insufficient lifting force

   When any of the above problems occur, please reconsider the usage method.

ø20, ø25, ø35, ø50

Good for film packaging applications

This product uses silicone rubber compliant with the FDA (USA Food and Drug Administration) regulation 21CFR§177.2600 for "Rubber articles intended for repeated use."

Blue colored pad

Easy to distinguish the vacuum pad by color during contamination inspection

Reduced leakage

Sealing skirt design, better sealing performance even for thin films

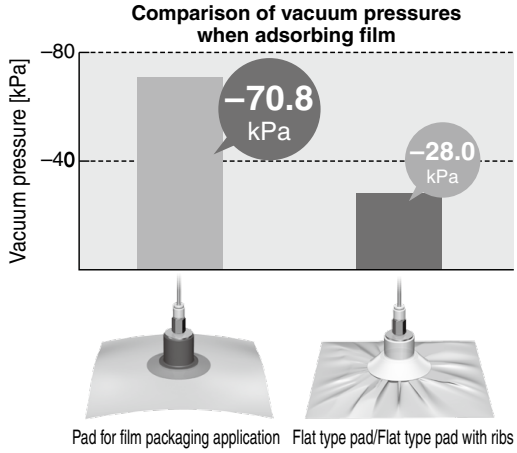



Reduction of wrinkles made on thin workpieces (film, vinyl, etc.) during adsorption

Wrinkle prevention with the stopper in the center of the vacuum pad



Variations

Form	Pad diameter ø20	ø25	ø35	ø50	Vacuum inlet/Mounting	Buffer stroke	Page
Pad Unit	●	●	●	●	—	—	267
With Adapter — Male thread	●	●	●	●	M5 x 0.8, M12 x 1.75 G1/8, G1/4, G3/8	—	268
With Adapter — Female thread	●	●	●	●	M5 x 0.8 M8 x 1.25	—	268
With Buffer — Female thread	●	●	●	●	Vacuum inlet: M5 x 0.8, Rc1/8 Mounting: M10 x 1, M14 x 1	10 mm/20 mm	271

Vacuum Pad

Pad diameter ø20, ø25, ø35, ø50

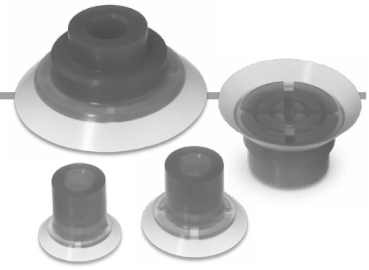

How to Order

Pad unit **ZP3P − 20 PT SF**

∗ Pad unit's sales unit: 10 pcs.

Pad diameter

Symbol	Pad diameter
20	ø20
25	ø25
35	ø35
50	ø50

Mounting Bracket Part Nos.

Adapter Assembly	p. 275
Buffer Assembly	p. 275

Pad material

Symbol	Material
SF	Silicone rubber Compliant with the FDA (USA Food and Drug Administration) regulation 21CFR§177.2600 for "Rubber articles intended for repeated use"

Dimensions: Pad Unit

ZP3P-20PTSF [Weight: 1.8 g]

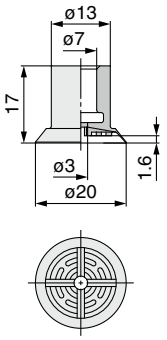

ZP3P-25PTSF [Weight: 2.2 g]

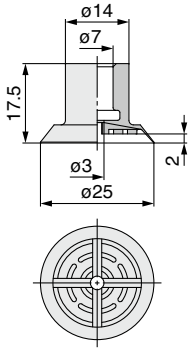

ZP3P-35PTSF [Weight: 4.7 g]

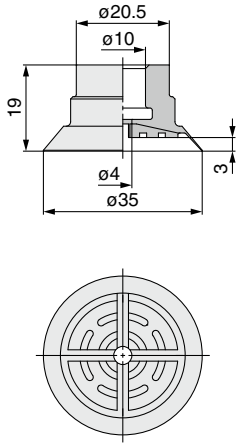

ZP3P-50PTSF [Weight: 12.4 g]

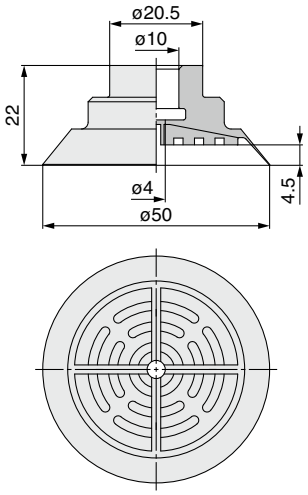

Pad Mounting Dimensions

If an adapter will be made by the customer, design the adapter with the dimensions shown below.

Applicable pad 20PT/25PT

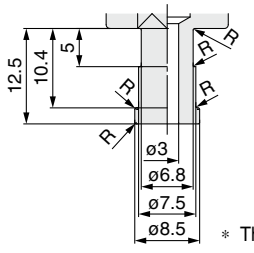

Applicable pad 35PT/50PT

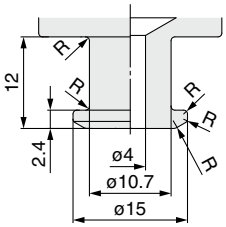

∗ The R part has to be smooth with no corners.

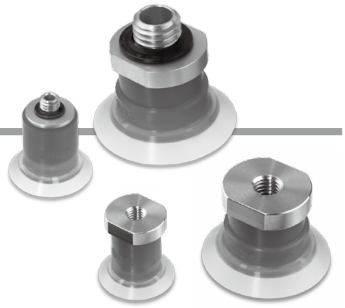

How to Order

Vertical vacuum inlet With adapter

ZP3P – T 20 PT SF – A5

Pad diameter

Symbol	Pad diameter
20	ø20
25	ø25
35	ø35
50	ø50

Pad material

Symbol	Material
SF	Silicone rubber Compliant with the FDA (USA Food and Drug Administration) regulation 21CFR§177.2600 for "Rubber articles intended for repeated use"

Mounting thread size

Type	Symbol	Size	ø20	ø25	ø35	ø50
Male thread	**A5**	M5 x 0.8	●	●	—	—
	A12	M12 x 1.75	—	—	●	●
	AG1	G1/8	●	●	—	—
	AG2	G1/4	—	—	●	●
	AG3	G3/8	—	—	●	●
Female thread	**B5**	M5 x 0.8	●	●	—	—
	B8	M8 x 1.25	—	—	●	●

∗ The pad is shipped together but does not come assembled.

Dimensions: With Male Thread Adapter

ZP3P-T20PTSF-A5 [Weight: 3.9 g]

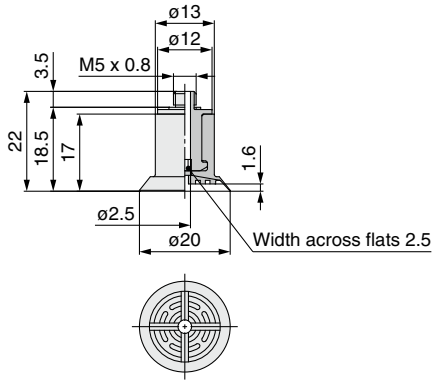

ZP3P-T20PTSF-AG1 [Weight: 5.9 g]

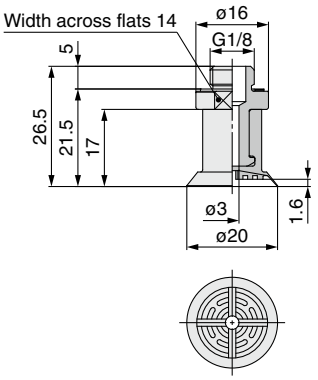

ZP3P-T25PTSF-A5 [Weight: 4.3 g]

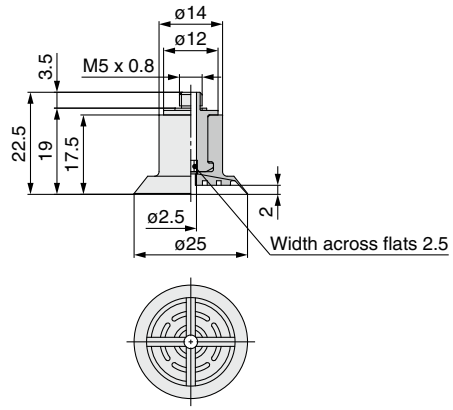

ZP3P-T25PTSF-AG1 [Weight: 6.3 g]

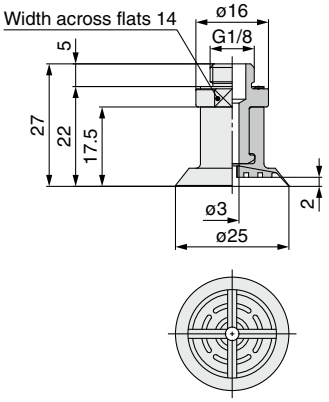

Dimensions: With Male Thread Adapter

ZP3P-T35PTSF-A12 [Weight: 20.7 g]

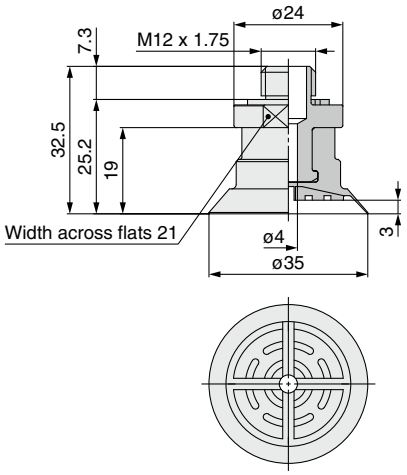

ZP3P-T35PTSF-AG2 [Weight: 14.5 g]

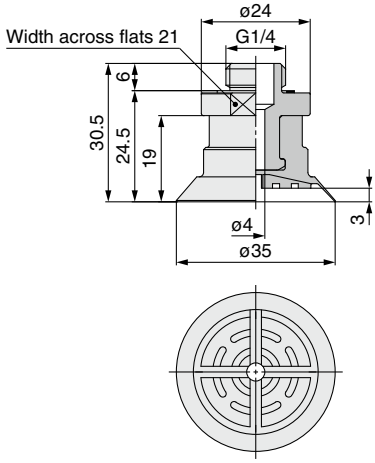

ZP3P-T35PTSF-AG3 [Weight: 21.1 g]

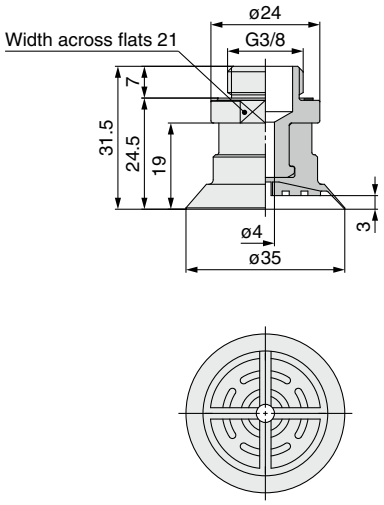

ZP3P-T50PTSF-A12 [Weight: 28.4 g]

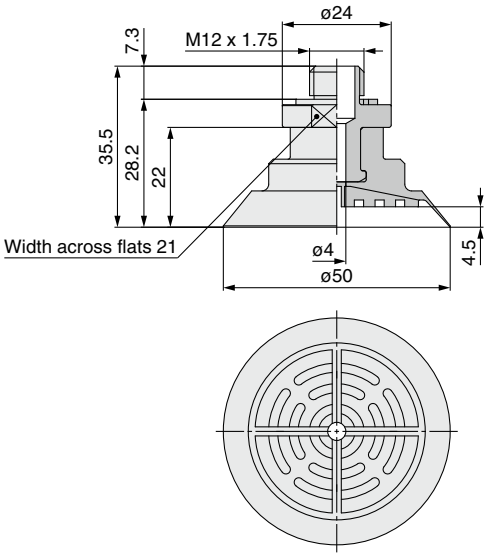

ZP3P-T50PTSF-AG2 [Weight: 22.2 g]

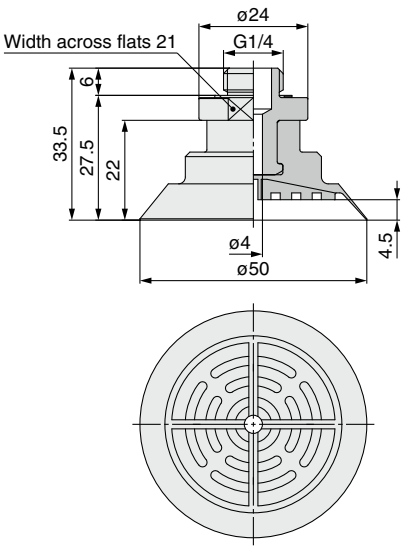

ZP3P-T50PTSF-AG3 [Weight: 28.8 g]

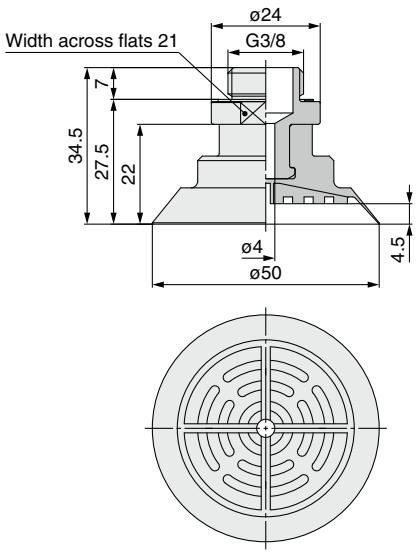

Dimensions: With Female Thread Adapter

ZP3P-T20PTSF-B5 [Weight: 4.9 g]

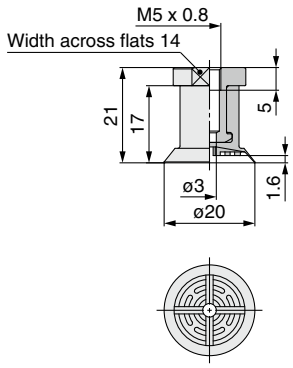

ZP3P-T25PTSF-B5 [Weight: 5.3 g]

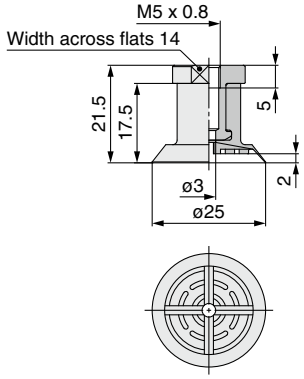

ZP3P-T35PTSF-B8 [Weight: 13.2 g]

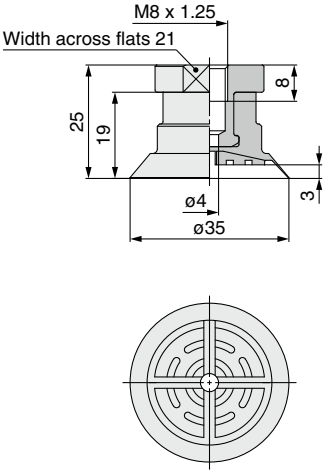

ZP3P-T50PTSF-B8 [Weight: 20.9 g]

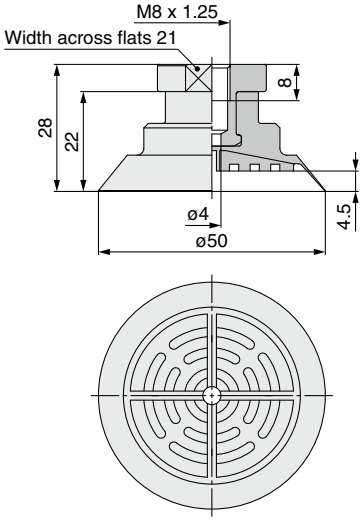

How to Order

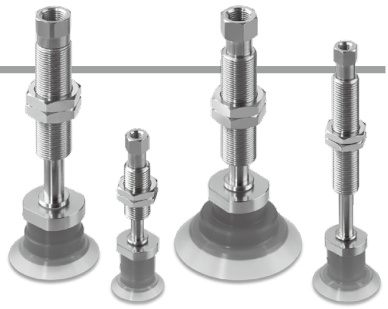

Vertical vacuum inlet With buffer

ZP3P – T 20 PT SF J 10 – B5

Pad diameter

Symbol	Pad diameter
20	ø20
25	ø25
35	ø35
50	ø50

Pad material

Symbol	Material
SF	Silicone rubber Compliant with the FDA (USA Food and Drug Administration) regulation 21CFR§177.2600 for "Rubber articles intended for repeated use"

Buffer specification

J	Rotating
K	Non-rotating

Vacuum inlet

Type	Symbol	Size	ø20, ø25	ø35, ø50
Female thread	**B5**	M5 x 0.8	●	—
	B01	Rc1/8	—	●

Stroke (■)

Symbol	Stroke	ø20, ø25	ø35, ø50
10	10 mm	●	●
20	20 mm	●	●

Specifications

Pad diameter	Buffer specification	Stroke [mm]	Tightening torque [N·m]	Connection thread	Spring reactive force [N]	
					At 0 stroke	At full stroke
ø20, ø25	**J/K**	10, 20	2.5 to 3.5	M10 x 1	1.0	3.0
ø35, ø50	**J/K**	10, 20	6.5 to 7.5	M14 x 1	2.0	5.0

∗ The pad and mounting nut are shipped together but do not come assembled.

⚠ Specific Product Precautions

Be sure to read this before handling the products. Refer to page 375 for safety instructions. For vacuum equipment and vacuum pad precautions, refer to pages 376 to 379.

Operating Precautions

⚠Caution

1. When selecting a buffer

Buffers come with general industrial grease applied to them and are therefore not compliant with FDA regulations. Metal wear particles will be generated due to the sliding motion of the buffer. Please take this into consideration when deciding whether this pad is suitable for your application.

Dimensions: With Buffer

ZP3P-T20PTSFJ■-B5

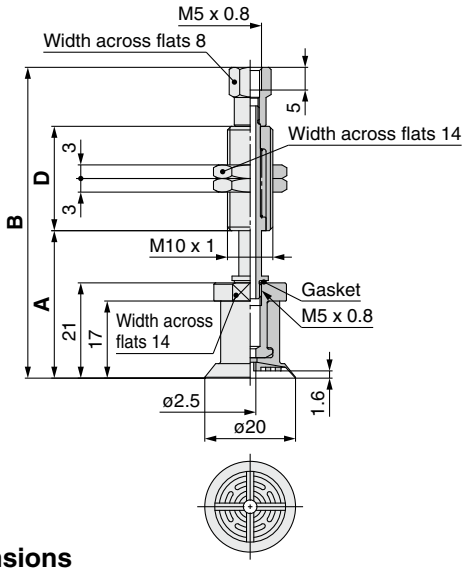

ZP3P-T20PTSFK■-B5

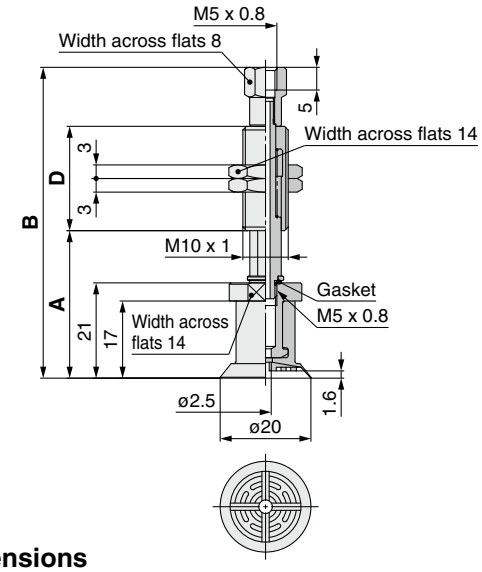

Dimensions

Part no.	A	B	D	Weight [g]
ZP3P-T20PTSFJ10-B5	32.5	68.5	23	26.7
ZP3P-T20PTSFJ20-B5	42.5	106.5	51	40.8

Dimensions

Part no.	A	B	D	Weight [g]
ZP3P-T20PTSFK10-B5	32.5	68.5	23	28.5
ZP3P-T20PTSFK20-B5	42.5	106.5	51	41.8

Dimensions: With Buffer

ZP3P-T25PTSFJ■-B5

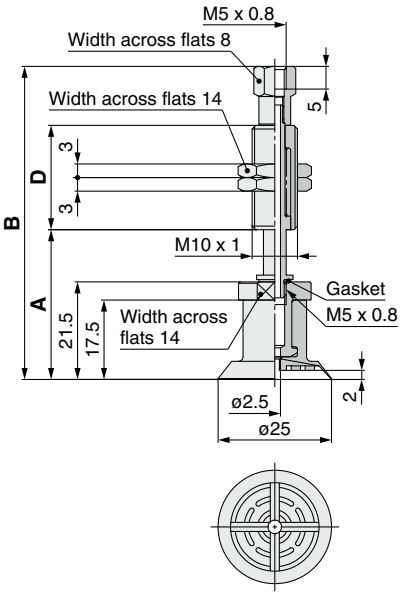

Dimensions

Part no.	A	B	D	Weight [g]
ZP3P-T25PTSFJ10-B5	33	69	23	27.1
ZP3P-T25PTSFJ20-B5	43	107	51	41.2

ZP3P-T25PTSFK■-B5

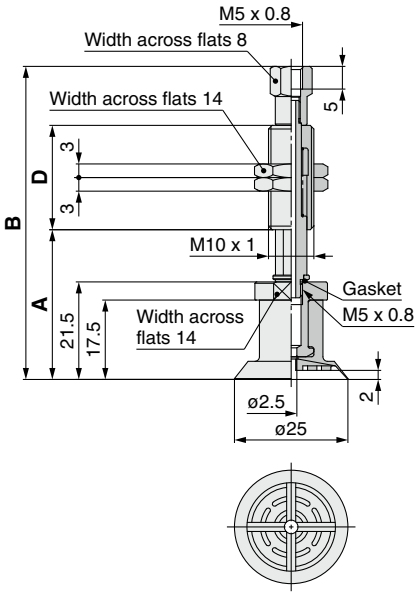

Dimensions

Part no.	A	B	D	Weight [g]
ZP3P-T25PTSFK10-B5	33	69	23	28.5
ZP3P-T25PTSFK20-B5	43	107	51	42.2

ZP3P-T35PTSFJ■-B01

ZP3P-T35PTSFJ10-B01

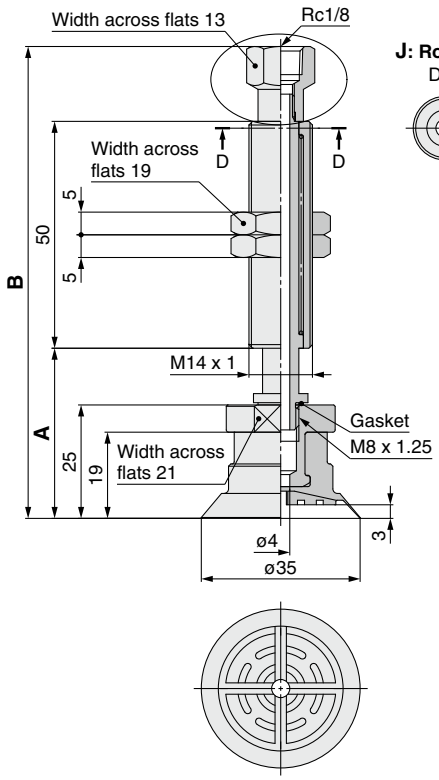

ZP3P-T35PTSFJ20-B01

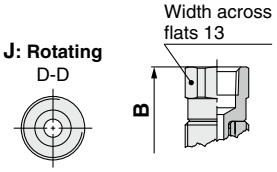

Dimensions

Part no.	A	B	Weight [g]
ZP3P-T35PTSFJ10-B01	37.5	104	93.6
ZP3P-T35PTSFJ20-B01	47.5	109.5	94.6

ZP3P-T35PTSFK■-B01

ZP3P-T35PTSFK10-B01

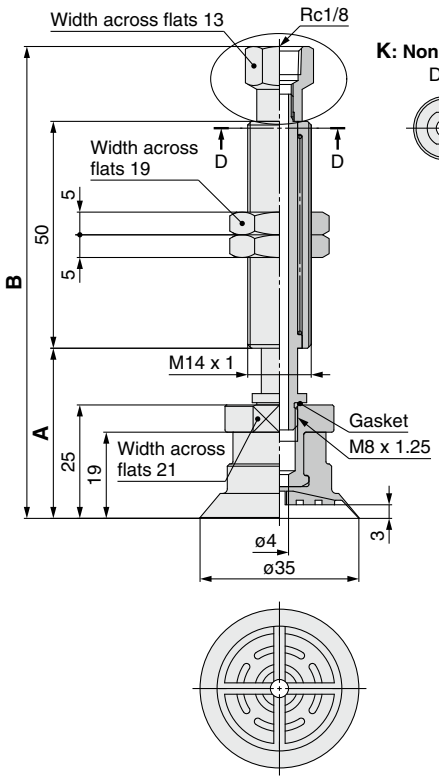

ZP3P-T35PTSFK20-B01

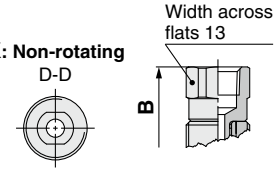

Dimensions

Part no.	A	B	Weight [g]
ZP3P-T35PTSFK10-B01	37.5	104	93.0
ZP3P-T35PTSFK20-B01	47.5	109.5	94.1

Dimensions: With Buffer

ZP3P-T50PTSFJ■-B01

ZP3P-T50PTSFJ10-B01 **ZP3P-T50PTSFJ20-B01**

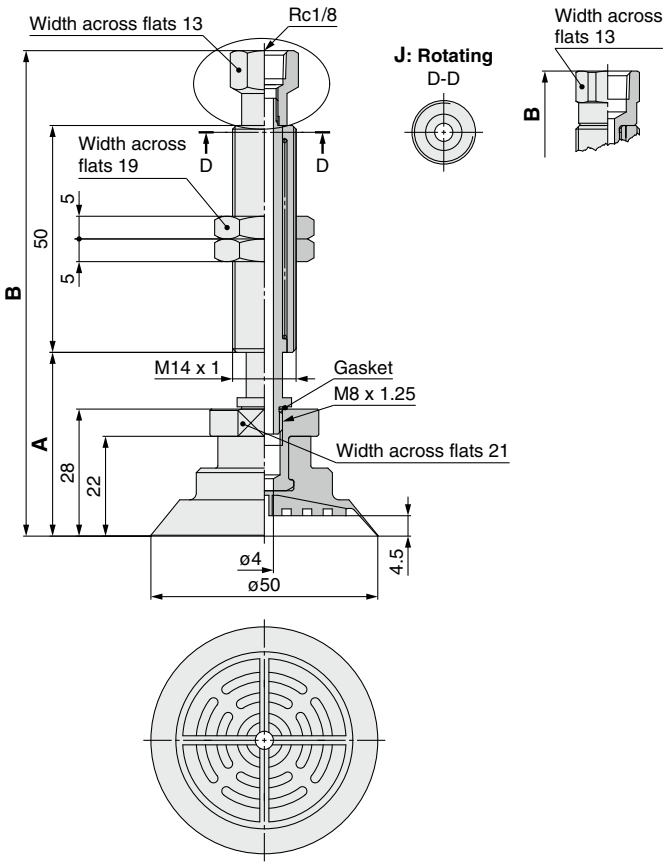

Dimensions

Part no.	A	B	Weight [g]
ZP3P-T50PTSFJ10-B01	40.5	107	101.3
ZP3P-T50PTSFJ20-B01	50.5	112.5	102.3

ZP3P-T50PTSFK■-B01

ZP3P-T50PTSFK10-B01 **ZP3P-T50PTSFK20-B01**

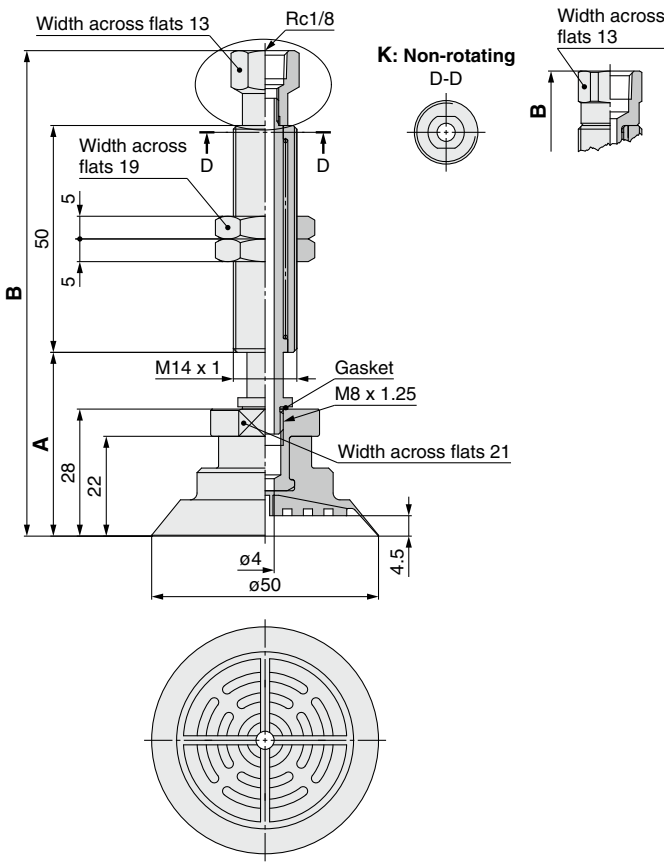

Dimensions

Part no.	A	B	Weight [g]
ZP3P-T50PTSFK10-B01	40.5	107	100.7
ZP3P-T50PTSFK20-B01	50.5	112.5	101.8

Vacuum Pad *ZP3P Series*
Construction

Pad with Adapter

Male thread

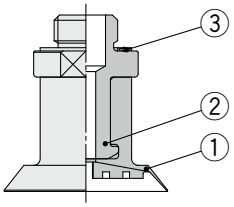

Female thread

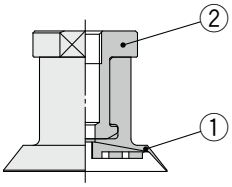

Component Parts

No.	Description	Material (Surface treatment)	Note
1	**Vacuum pad**	Silicone rubber Compliant with the FDA (USA Food and Drug Administration) regulation 21CFR§177.2600 for “Rubber articles intended for repeated use”	
2	**Adapter**	Aluminum alloy (Clear anodized)	
3	**Gasket**	Stainless steel/NBR	Thread size: Other than M12 x 1.75
	Seal washer	Structural steel/NBR	Thread size: M12 x 1.75

Pad with Buffer

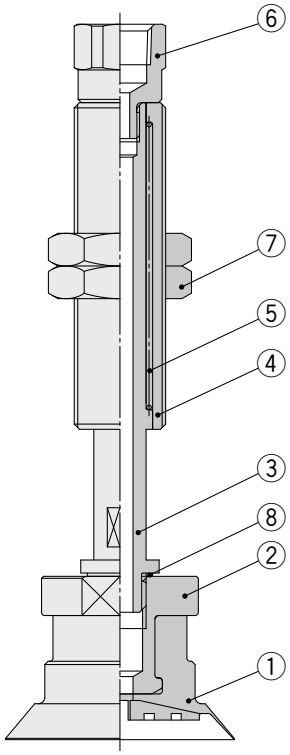

Component Parts

No.	Description	Material (Surface treatment)
1	**Vacuum pad**	Silicone rubber Compliant with the FDA (USA Food and Drug Administration) regulation 21CFR§177.2600 for “Rubber articles intended for repeated use”
2	**Adapter**	Aluminum alloy (Clear anodized)
3	**Piston rod**	Stainless steel
4	**Buffer body**	Brass (Electroless nickel plating)
5	**Return spring**	Stainless steel
6	**Buffer adapter**	Brass (Electroless nickel plating)
7	**Nut**	Brass (Nickel plating)
8	**Gasket**	Stainless steel/NBR

Vacuum Pad *ZP3P Series*
Parts Structure

With T Type Adapter

ZP3P-T (20 to 50) PTSF-(A5/AG1/A12/AG2/AG3)
ZP3P-T (20 to 50) PTSF-(B5/B8)

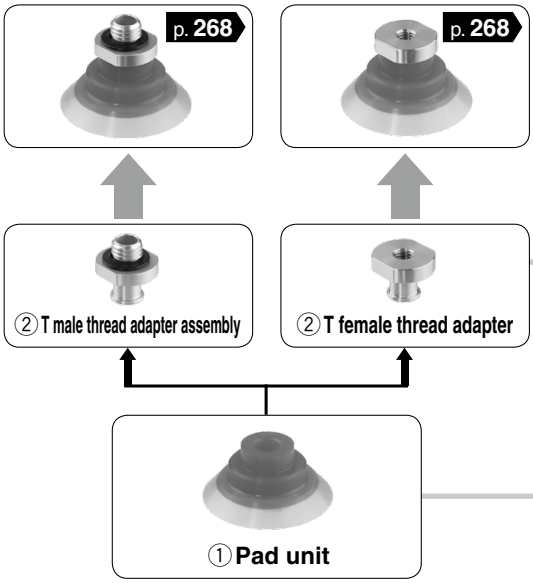

② T male thread adapter assembly (With gasket)

Part no. \ Pad diameter	20	25	35	50
ZP3PA-T1-A5	●	●	—	—
ZP3PA-T1-AG1	●	●	—	—
ZP3PA-T2-A12	—	—	●	●
ZP3PA-T2-AG2	—	—	●	●
ZP3PA-T2-AG3	—	—	●	●

② T female thread adapter

Part no. \ Pad diameter	20	25	35	50
ZP3PA-T1-B5	●	●	—	—
ZP3PA-T2-B8	—	—	●	●

① Pad unit

Part no.
ZP3P-20PTSF
ZP3P-25PTSF
ZP3P-35PTSF
ZP3P-50PTSF

With Buffer

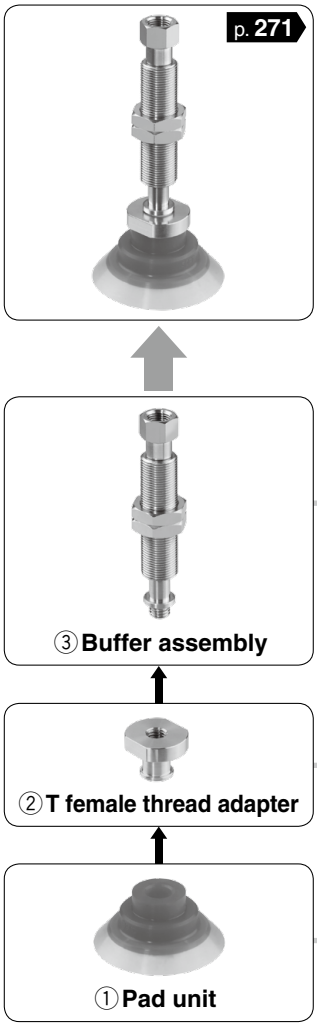

③ Buffer assembly

Part no. \ Pad diameter	20	25	35	50
ZPB2(J/K)10-B5	●	●	—	—
ZPB2(J/K)20-B5	●	●	—	—
ZPB3(J/K)10-B01	—	—	●	●
ZPB3(J/K)20-B01	—	—	●	●

② T female thread adapter

Part no. \ Pad diameter	20	25	35	50
ZP3PA-T1-B5	●	●	—	—
ZP3PA-T2-B8	—	—	●	●

① Pad unit

Part no.
ZP3P-20PTSF
ZP3P-25PTSF
ZP3P-35PTSF
ZP3P-50PTSF

Bellows Pad (4.5-Stage)

Pad diameter ø15, ø20, ø30, ø40, ø46

Symbol/Form

ZJ: Bellows type

■For adsorbing workpieces moving at high speeds
■Follows various shapes of workpieces
■Pad material: Silicone rubber
(Rubber hardness: A40, A50, A60)

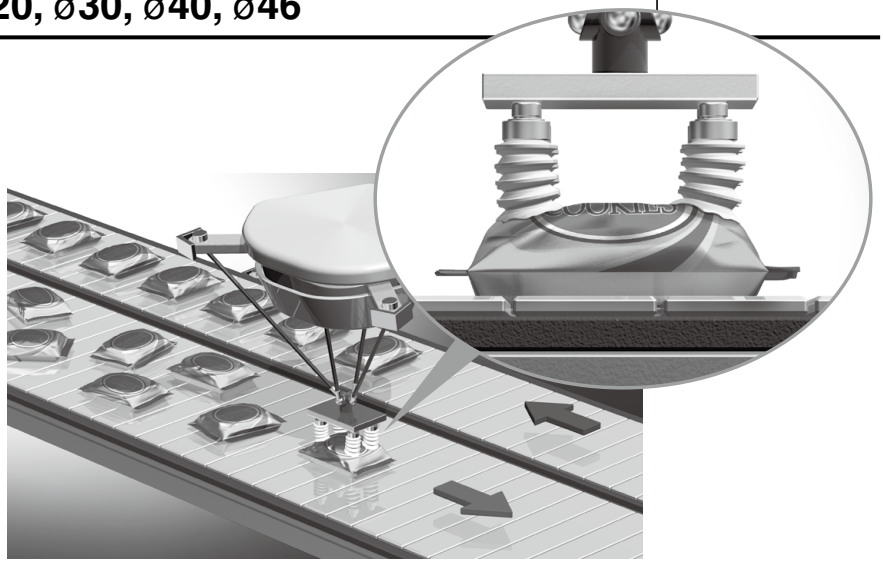

● Short thread type

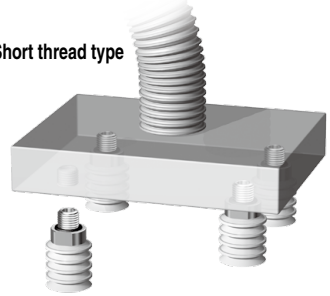

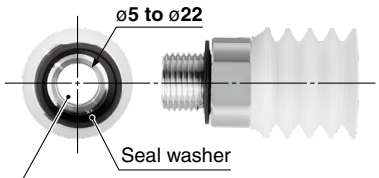

● One-touch fitting type

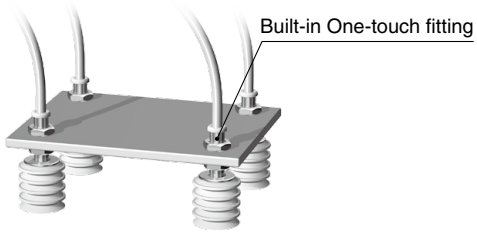

■Large opening size (short thread type): ø5 to ø22
For vacuum blower pumps with high suction flow rates

How to Order

Pad unit **ZP2 − B15 ZJ S**

∗ Pad unit's sales unit: 10 pcs.

Pad diameter

Symbol	Pad diameter
B15	ø15∗1
B20	ø20∗1
B30	ø30∗1
40	ø40
46	ø46

∗1 Pad O.D.

Pad form

Symbol	Form
ZJ	Bellows type (4.5-stage)

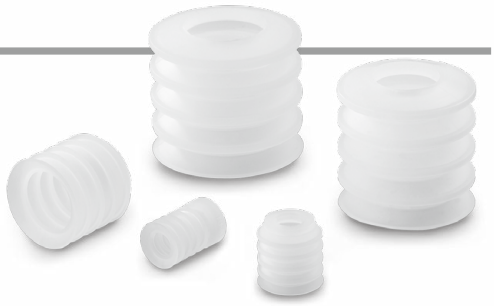

Pad material

Symbol	Material		Applicable pad diameter				
			ø15	ø20	ø30	ø40	ø46
N	NBR		—	—	—	●	●
U	Urethane rubber		—	—	—	●	●
F	FKM		—	—	—	●	●
GN	Conductive NBR		—	—	—	●	●
GS	Conductive silicone rubber (Black)		—	—	—	●	●
S	Silicone rubber∗1 (White)	Hardness A40/S∗2	●	●	●	—	—
		Hardness A50/S	—	—	—	●	●
S6	Silicone rubber∗1 High-hardness type (White)	Hardness A60/S	●	●	●	—	—

∗1 Compliant with the FDA (USA Food and Drug Administration) regulation 21CFR§177.2600 for "Rubber articles intended for repeated use"
∗2 Identification of rubber hardness: Painted with 1 pink dot

Mounting Bracket Part Nos.

Adapter Assembly	p. 281

Dimensions: Pad Unit

ZP2-B15ZJS□

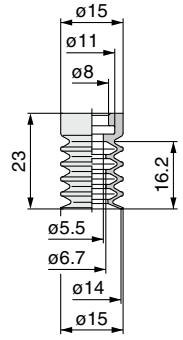

ZP2-B20ZJS□

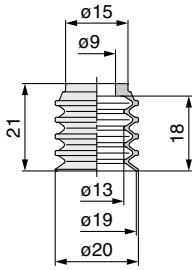

ZP2-B30ZJS□

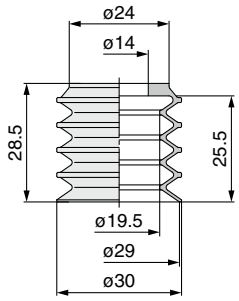

ZP2-40ZJ□

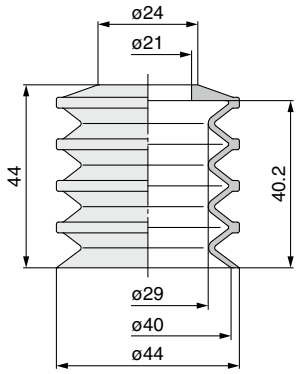

ZP2-46ZJ□

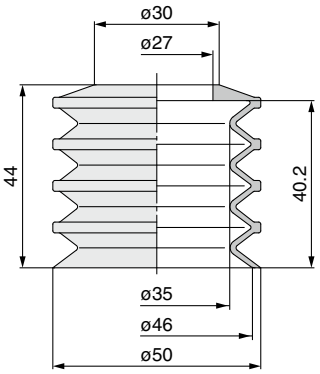

Weight	[g]
ZP2-B15ZJS□	2.0
ZP2-B20ZJS□	2.0
ZP2-B30ZJS□	4.5
ZP2-40ZJN	16.0
ZP2-40ZJS□	15.0
ZP2-40ZJU	16.0
ZP2-40ZJF	25.0
ZP2-40ZJGN	16.0
ZP2-40ZJGS	16.0
ZP2-46ZJN	19.0
ZP2-46ZJS□	17.0
ZP2-46ZJU	19.0
ZP2-46ZJF	30.0
ZP2-46ZJGN	19.0
ZP2-46ZJGS	19.0

How to Order

Vertical vacuum inlet with adapter

ZP2 – T B15 ZJ S – A10 – 06



Pad diameter

Symbol	Pad diameter
B15	ø15*1
B20	ø20*1
B30	ø30*1
40	ø40
46	ø46

*1 Pad O.D.

Pad form

Symbol	Form
ZJ	Bellows type (4.5-stage)

Vacuum inlet

Symbol	Vacuum inlet	Connection thread					
		A10	A16	A20	A30	AL12	AL14
Nil	Short thread	●	●	●	●	—	—
06	One-touch fitting(ø6)	—	—	—	—	●	●

Pad material

Symbol	Material		Applicable pad diameter				
			ø15	ø20	ø30	ø40	ø46
N	NBR		—	—	—	●	●
U	Urethane rubber		—	—	—	●	●
F	FKM		—	—	—	●	●
GN	Conductive NBR		—	—	—	●	●
GS	Conductive silicone rubber (Black)		—	—	—	●	●
S	Silicone rubber*1 (White)	Hardness A40/S*2	●	●	●	—	—
		Hardness A50/S	—	—	—	●	●
S6	Silicone rubber*1 High-hardness type (White)	Hardness A60/S	●	●	●	—	—

*1 Compliant with the FDA (USA Food and Drug Administration) regulation 21CFR§177.2600 for "Rubber articles intended for repeated use"

*2 Identification of rubber hardness: Painted with 1 pink dot

Connection thread

Type	Symbol	Size	ø15	ø20	ø30	ø40	ø46
Short thread 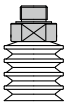	**A10**	M10 x 1	●	●	—	—	—
	A16	M16 x 1.5	—	—	●	—	—
	A20	M20 x 1.5	—	—	—	●	—
	A30	M30 x 1.5	—	—	—	—	●
One-touch fitting 	**AL12**	M12 x 1	●	●	—	—	—
	AL14	M14 x 1.5	—	—	●	●	●

* The pad is shipped together but does not come assembled.

Dimensions

■ Vacuum inlet: Short thread type

ZP2-TB15ZJS□-A10

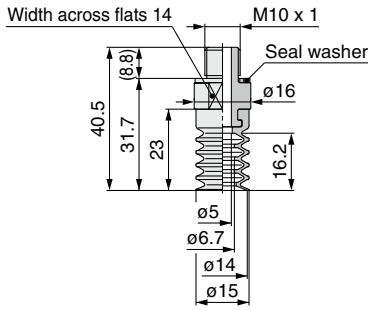

ZP2-TB20ZJS□-A10

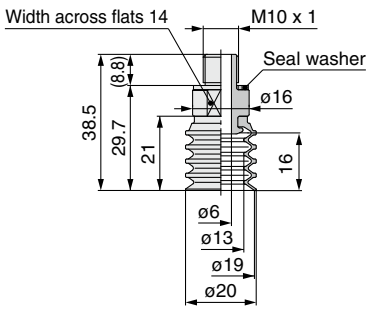

ZP2-TB30ZJS□-A16

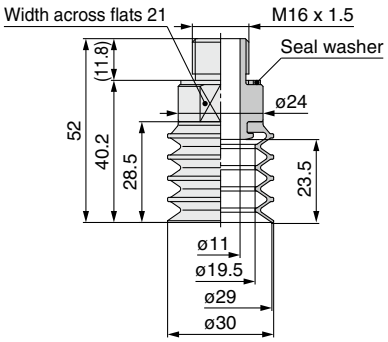

ZP2-T40ZJ□-A20

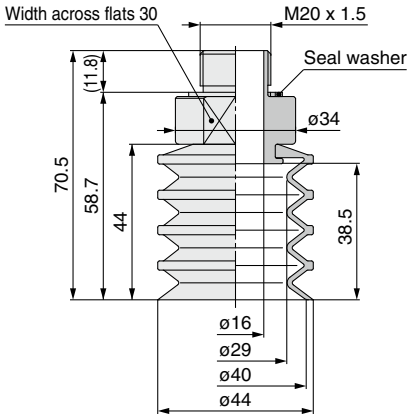

ZP2-T46ZJ□-A30

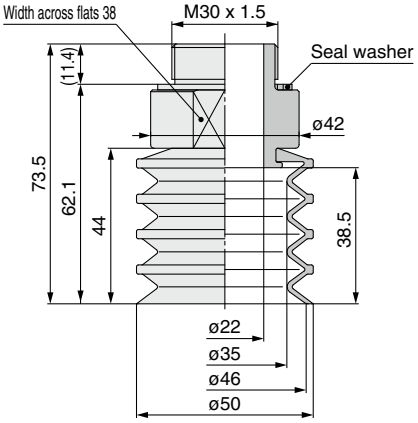

Weight	[g]
ZP2-TB15ZJS□-A10	9.0
ZP2-TB20ZJS□-A10	9.0
ZP2-TB30ZJS□-A16	20.5
ZP2-T40ZN-A20	51.0
ZP2-T40ZJS□-A20	50.0
ZP2-T40ZJU-A20	51.0
ZP2-T40ZJF-A20	60.0
ZP2-T40ZJGN-A20	51.0
ZP2-T40ZJGS-A20	51.0
ZP2-T46ZJN-A30	84.0
ZP2-T46ZJS□-A30	82.0
ZP2-T46ZJU-A30	84.0
ZP2-T46ZJF-A30	95.0
ZP2-T46ZJGN-A30	84.0
ZP2-T46ZJGS-A30	84.0

■ Vacuum inlet: One-touch fitting type

ZP2-TB15ZJS□-AL12-06

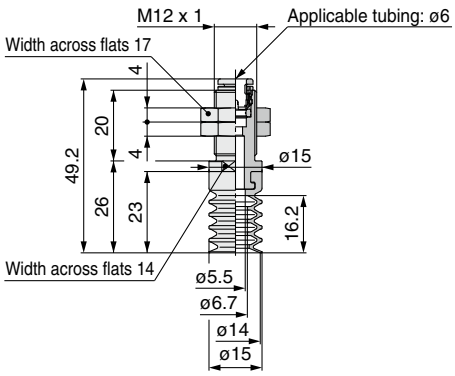

ZP2-TB20ZJS□-AL12-06

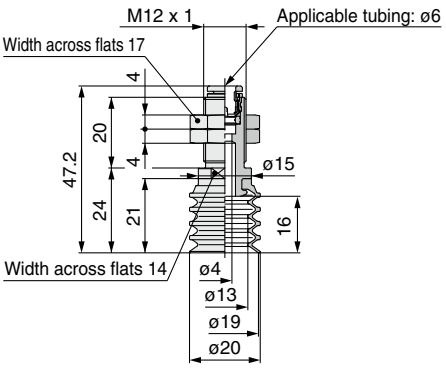

ZP2-TB30ZJS□-AL14-06

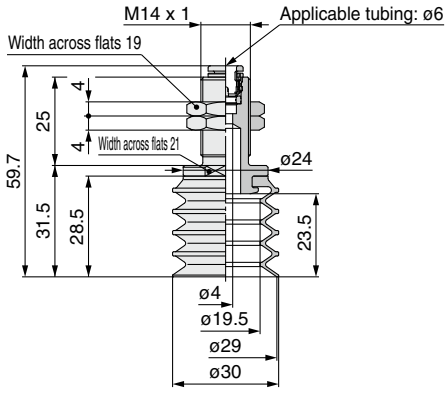

ZP2-T40ZJ□-AL14-06

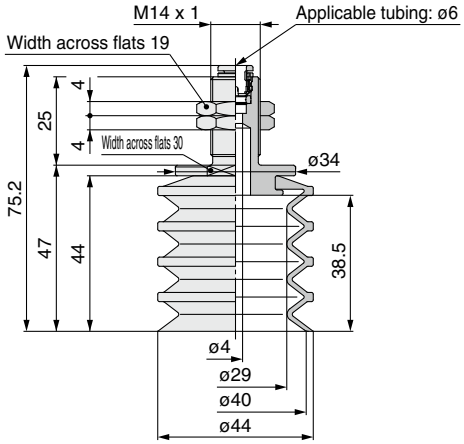

ZP2-T46ZJ□-AL14-06

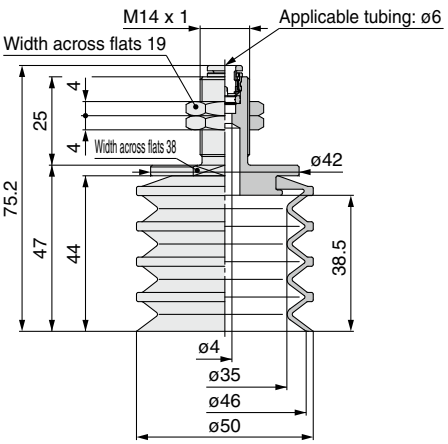

Weight	[g]
ZP2-TB15ZJS□-AL12-06	17.0
ZP2-TB20ZJS□-AL12-06	17.0
ZP2-TB30ZJS□-AL14-06	26.5
ZP2-T40ZJN-AL14-06	46.0
ZP2-T40ZJS□-AL14-06	45.0
ZP2-T40ZJU-AL14-06	46.0
ZP2-T40ZJF-AL14-06	55.0
ZP2-T40ZJGN-AL14-06	46.0
ZP2-T40ZJGS-AL14-06	46.0
ZP2-T46ZJN-AL14-06	56.0
ZP2-T46ZJS□-AL14-06	54.0
ZP2-T46ZJU-AL14-06	56.0
ZP2-T46ZJF-AL14-06	67.0
ZP2-T46ZJGN-AL14-06	56.0
ZP2-T46ZJGS-AL14-06	56.0

Component Parts

■ Short thread type (Pad with adapter)

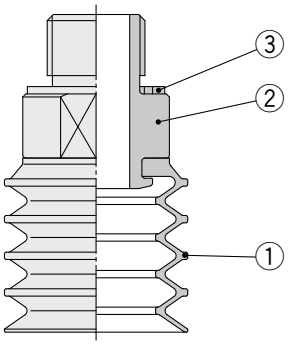

Component Parts

No.	Description	Material (Surface treatment)
1	**Pad**	Refer to the pad material (page 276).
2	**Adapter**	Aluminum alloy (Anodized)
3	**Seal washer**	Structural steel/NBR

■ One-touch fitting type (Pad with adapter)

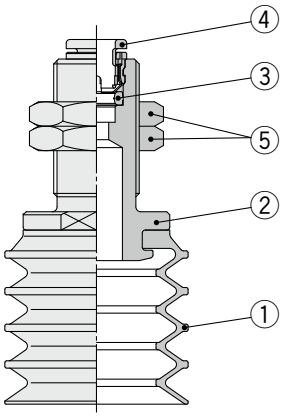

Component Parts

No.	Description	Material (Surface treatment)
1	**Pad**	Refer to the pad material (page 276).
2	**Adapter**	Aluminum alloy (Anodized)
3	**Seal**	NBR
4	**Cassette**	—
5	**Nut**	Structural steel (Trivalent chromated)

Pad Displacement to Vacuum Pressure (Pad material: Silicone rubber)

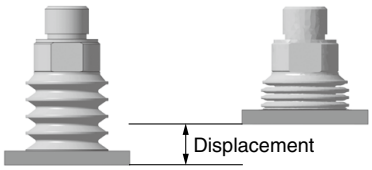

The data shown below are not guaranteed but actual measured (initial value). These values depend on the operating environment, workpiece weight and transfer method, so they cannot be guaranteed by SMC. Thorough research and confirmation are necessary before use.

ZP2-B15ZJS

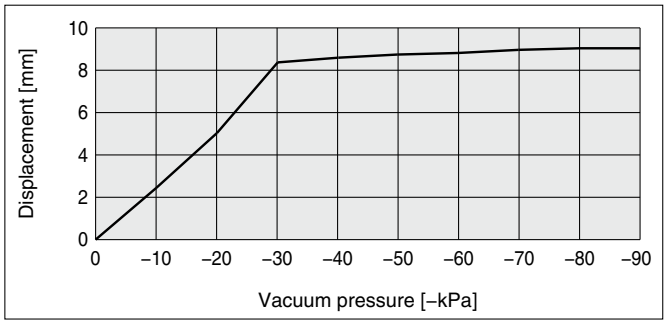

ZP2-B15ZJS6

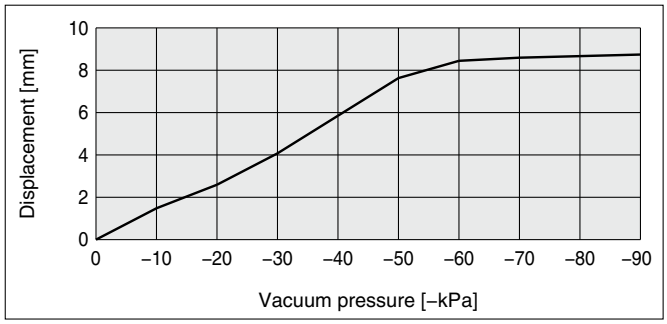

ZP2-B20ZJS

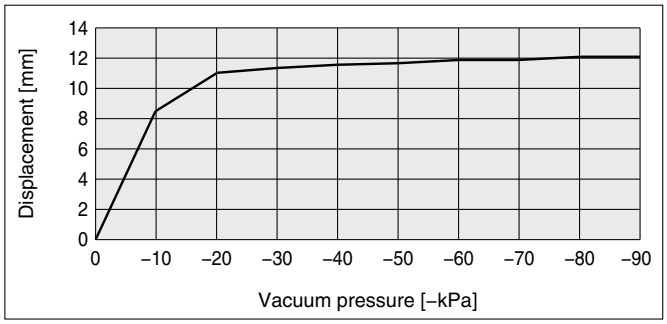

ZP2-B20ZJS6

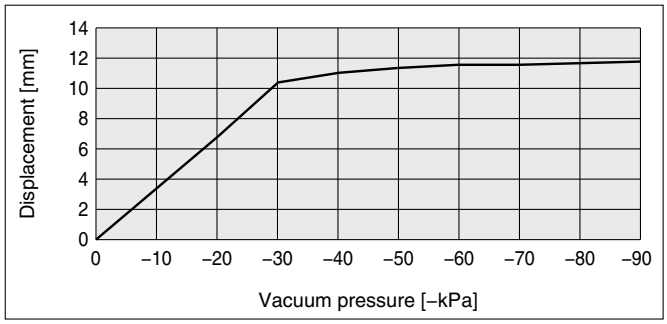

ZP2-B30ZJS

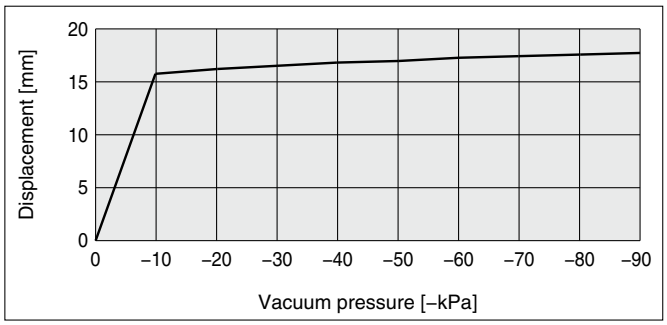

ZP2-B30ZJS6

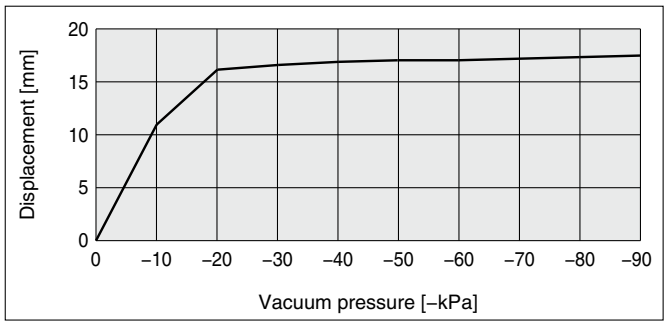

ZP2-40ZJS

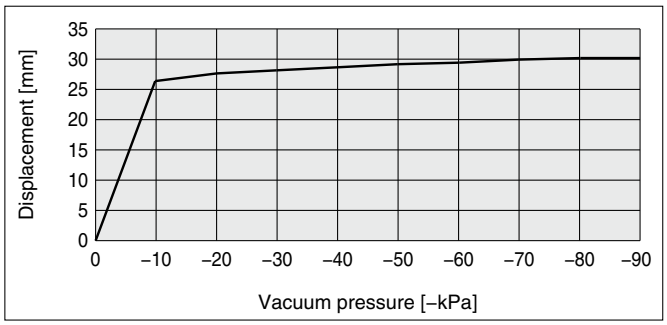

ZP2-46ZJS

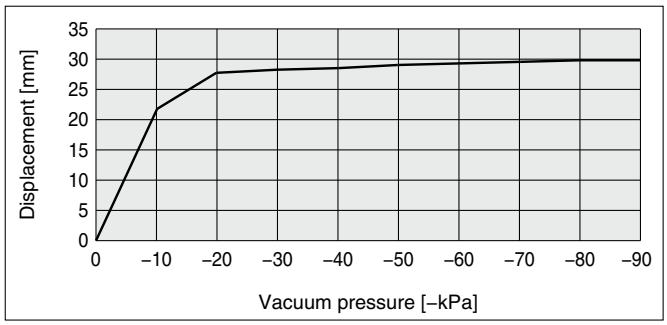

Bellows Pad (4.5-Stage) *ZP2 Series*
Mounting Bracket Assembly

Adapter Assembly

Product part no.

ZP2 - T ① ZJ □ - ②

- ① Pad diameter
- ZJ Bellows type
- □ Pad material
- ② Connection thread (Male thread)

Component parts

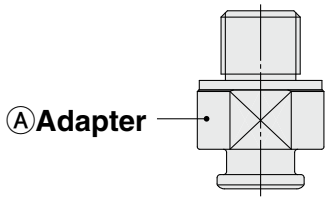

		Symbol	❶Pad diameter symbol				
			B15	B20	B30	40	46
ⒶAdapter ②Connection thread Male thread (Short thread)	M10 x 1	A10	ZP2A-Z31-1P	ZP2A-Z31-2P	—		
	M16 x 1.5	A16	—		ZP2A-Z31-3P	—	
	M20 x 1.5	A20	—			ZP2A-Z31-4P	—
	M30 x 1.5	A30	—				ZP2A-Z31-5P

Adapter Assembly

Product part no.

ZP2 - T ① ZJ □ - ② ③

- ① Pad diameter
- ZJ Bellows type
- □ Pad material
- ② Connection thread (Male thread)
- ③ Vacuum inlet (One-touch fitting)

Component parts

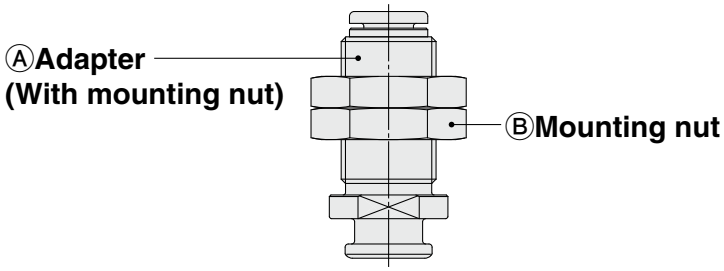

		Symbol			Symbol	❶Pad diameter symbol				
						B15	B20	B30	40	46
ⒶAdapter ②Connection thread Male thread	M12 x 1	AL12	③Vacuum inlet One-touch fitting	ø6	06	ZP2A-Z32-1	ZP2A-Z32-2	—		
	M14 x 1	AL14				—		ZP2A-Z32-3	ZP2A-Z32-4	ZP2A-Z32-5
ⒷMounting nut (Single unit)				M12 x 1		ZPNA-M12C		—		
				M14 x 1		—		ZPNA-M14A		

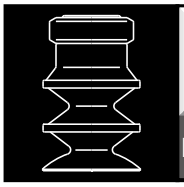

Bellows Pad (2.5/3.5-Stage)

Pad diameter ø6, ø9, ø10, ø14, ø15, ø16, ø25, ø30

Symbol/Form

J: Bellows type

■For use where there is no space for a buffer (spring type)

■For workpieces with inclined adsorption surfaces



∗ The pad and lock ring are shipped together.

Mounting Bracket Part Nos.

Adapter Assembly	p. 283 to 285

How to Order



Pad unit **ZP2 − 06 J N − X19**

∗ Pad unit's sales unit: 10 pcs.

Pad diameter

Symbol	Pad diameter	Blast type
06	ø6	—
09	ø9	—
B10	ø10	●
14	ø14	—
B15	ø15	●
16	ø16	—
B25	ø25	●
B30	ø30	●

∗ Blast type: Workpieces can be removed easily.

Pad material

Symbol	Material
N	NBR
S	Silicone rubber∗1
U	Urethane rubber
F	FKM
GN	Conductive NBR
GS	Conductive silicone rubber

∗1 Compliant with the FDA (USA Food and Drug Administration) regulation 21CFR§177.2600 for "Rubber articles intended for repeated use"

Pad form

Symbol	Form
J	Bellows type (2.5/3.5-stage)

With/Without lock ring

Nil	With lock ring
X19	Without lock ring∗2

∗2 ø6, ø10, and ø15 are not available.

Dimensions: Pad Unit

∗ The dimensions of the mounting bracket are the same as the ZP series. Refer to the mounting bracket dimensions on the following pages.

With Adapter	p. 69 to 78

ZP2-06J□

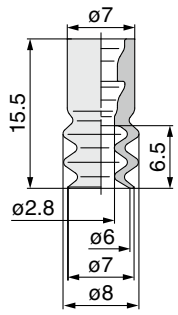

ZP2-09J□

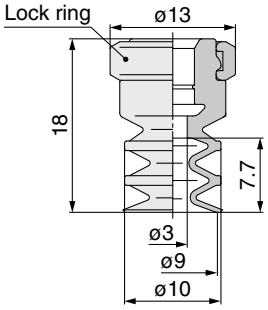

ZP2-B10J□

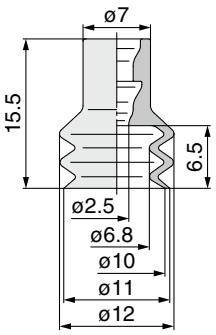

ZP2-14J□

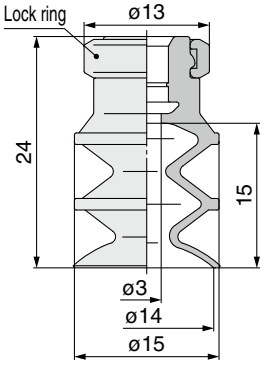

ZP2-B15J□

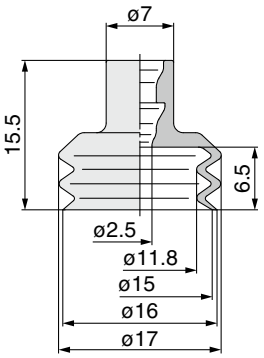

ZP2-16J□

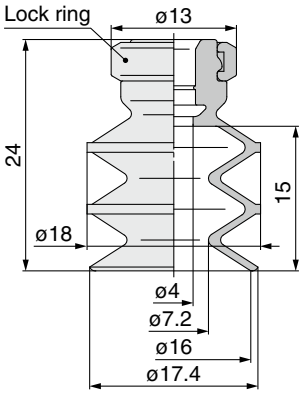

ZP2-B25J□

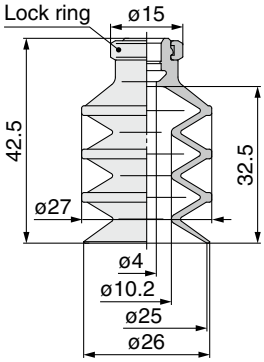

ZP2-B30J□

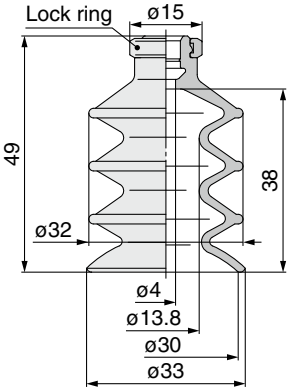

Adapter Mounting Dimensions

If an adapter will be made by the customer, design the adapter with the dimensions shown below.

Applicable pad 06J/B10J/B15J

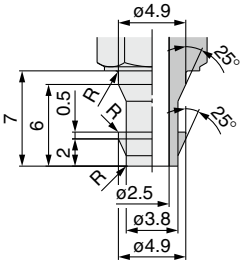

Applicable pad 09J/14J/16J

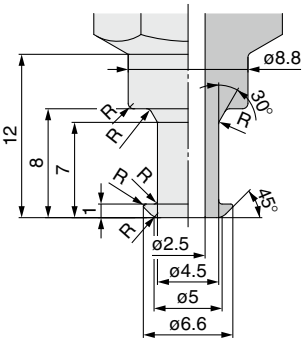

Applicable pad B25J/B30J

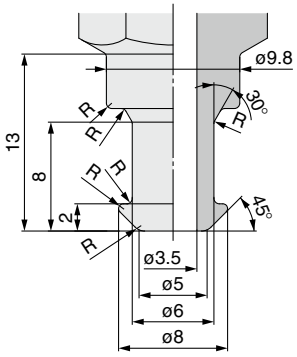

∗ The R part has to be smooth with no corners.

Bellows Pad (2.5/3.5-Stage) *ZP2 Series*
Mounting Bracket Assembly

Adapter Assembly

Product part no. (Pad unit)	**ZP2 - ① J □** **Pad diameter** ● **Bellows type** ● **Pad material**
Component parts	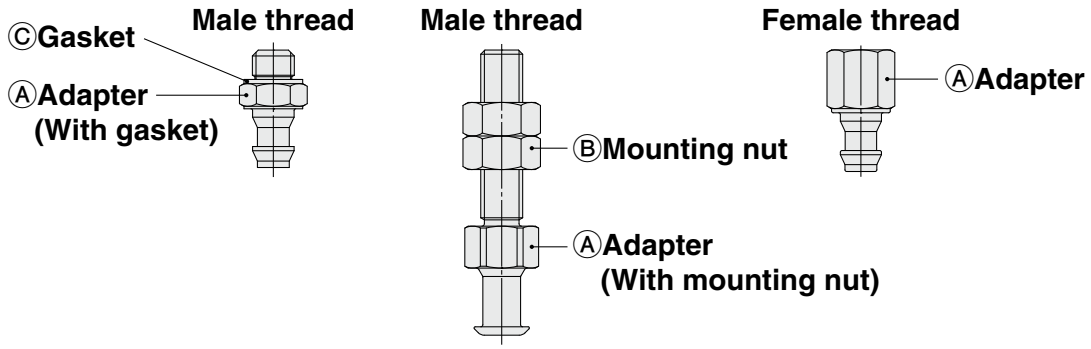

			❶Pad diameter symbol							
			06	B10	B15	09	14	16	B25	B30
ⒶAdapter Vacuum inlet	Male thread	M5 x 0.8	ZPT1-A5			ZPT2-A5			—	
		M6 x 1	ZPT1-A6			ZPT2-A6			ZPT3-A6	
		M8 x 1	—			—			ZPT3-A8	
	Female thread	M4 x 0.7	ZPT1-B4			—			—	
		M5 x 0.8	ZPT1-B5			ZPT2-B5			ZPT3-B5	
		M6 x 1	—			ZPT2-B6			ZPT3-B6	
		M8 x 1.25	—			—			ZPT3-B8	
		Rc1/8	—			ZPT2-B01			ZPT3-B01	
		NPT1/8	—			ZPT2-N01			ZPT3-N01	
		NPTF1/8	—			ZPT2-T01			ZPT3-T01	
ⒷMounting nut (Single unit)		M5 x 0.8	—			NTJ-015A			—	
		M6 x 1	—			ZPNA-M6			ZPNA-M6	
		M8 x 1	—			—			ZPNA-M8	
ⒸGasket (Single unit)		For M5 x 0.8	M-5G2			—			—	
		For M6 x 1	M-6G			—			—	

Adapter Assembly: With One-touch Fitting

Product part no. (Pad unit)

ZP2 - ① J □

- ① Pad diameter
- J Bellows type
- □ Pad material

Component parts

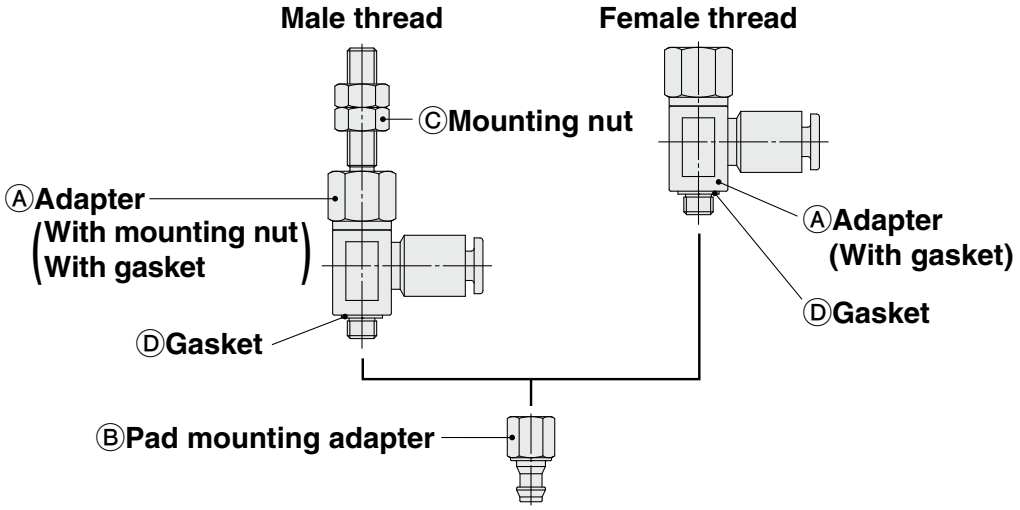

					①Pad diameter symbol							
					06	B10	B15	09	14	16	B25	B30
ⒶAdapter	Vacuum inlet	ø4	Connection thread	Male thread	M5 x 0.8	ZPRS-04-A5			ZPRS-04-A5		—	
					M6 x 1	ZPRS-04-A6			ZPRS-04-A6		ZPRL-04-A6	
					M8 x 1	—			—		ZPRL-04-A8	
				Female thread	M4 x 0.7	ZPRS-04-B4			—		—	
					M5 x 0.8	ZPRS-04-B5			ZPRS-04-B5		ZPRL-04-B5	
					M6 x 1	—			ZPRS-04-B6		ZPRL-04-B6	
					M8 x 1.25	—			—		ZPRL-04-B8	
		ø6		Male thread	M5 x 0.8	ZPRS-06-A5			ZPRS-06-A5		—	
					M6 x 1	ZPRS-06-A6			ZPRS-06-A6		ZPRL-06-A6	
					M8 x 1	—			—		ZPRL-06-A8	
				Female thread	M4 x 0.7	ZPRS-06-B4			—		—	
					M5 x 0.8	ZPRS-06-B5			ZPRS-06-B5		ZPRL-06-B5	
					M6 x 1	—			ZPRS-06-B6		ZPRL-06-B6	
					M8 x 1.25	—			—		ZPRL-06-B8	
		ø8		Male thread	M6 x 1	—			—		ZPRL-08-A6	
					M8 x 1	—			—		ZPRL-08-A8	
				Female thread	M5 x 0.8	—			—		ZPRL-08-B5	
					M6 x 1	—			—		ZPRL-08-B6	
					M8 x 1.25	—			—		ZPRL-08-B8	
ⒷPad mounting adapter					ZPT1-B5			ZPT2-B5			ZPT3-B8	
ⓒMounting nut (Single unit)				M5 x 0.8	NTJ-015A			NTJ-015A			—	
				M6 x 1	ZPNA-M6			ZPNA-M6			ZPNA-M6	
				M8 x 1	—			—			ZPNA-M8	
ⒹGasket (Single unit)					M-5G2			M-5G2			ZP-8G2	

Adapter Assembly: With Barb Fitting

Product part no. (Pad unit)

ZP2 - ① J □

- ① Pad diameter
- J Bellows type
- □ Pad material

Component parts

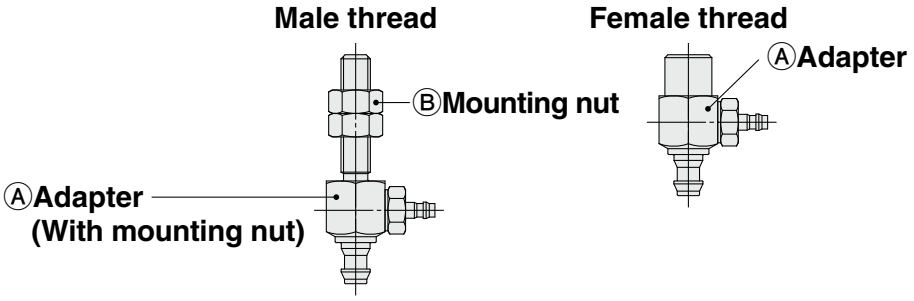

						❶Pad diameter symbol							
						06	B10	B15	09	14	16	B25	B30
ⒶAdapter	Vacuum inlet	For nylon tubing	ø4	Connection thread	Male thread	M5 x 0.8	ZPY1-N4-A5			ZPY2-N4-A5		—	
						M6 x 1	ZPY1-N4-A6			ZPY2-N4-A6		ZPY3-N4-A6	
						M8 x 1	—			—		ZPY3-N4-A8	
					Female thread	M4 x 0.7	ZPY1-N4-B4			—		—	
						M5 x 0.8	ZPY1-N4-B5			ZPY2-N4-B5		ZPY3-N4-B5	
						M6 x 1	—			ZPY2-N4-B6		ZPY3-N4-B6	
						M8 x 1.25	—			—		ZPY3-N4-B8	
			ø6		Male thread	M5 x 0.8	ZPY1-N6-A5			ZPY2-N6-A5		—	
						M6 x 1	ZPY1-N6-A6			ZPY2-N6-A6		ZPY3-N6-A6	
						M8 x 1	—			—		ZPY3-N6-A8	
					Female thread	M4 x 0.7	ZPY1-N6-B4			—		—	
						M5 x 0.8	ZPY1-N6-B5			ZPY2-N6-B5		ZPY3-N6-B5	
						M6 x 1	—			ZPY2-N6-B6		ZPY3-N6-B6	
						M8 x 1.25	—			—		ZPY3-N6-B8	
		For soft tubing	ø4		Male thread	M5 x 0.8	ZPY1-U4-A5			ZPY2-U4-A5		—	
						M6 x 1	ZPY1-U4-A6			ZPY2-U4-A6		ZPY3-U4-A6	
						M8 x 1	—			—		ZPY3-U4-A8	
					Female thread	M4 x 0.7	ZPY1-U4-B4			—		—	
						M5 x 0.8	ZPY1-U4-B5			ZPY2-U4-B5		ZPY3-U4-B5	
						M6 x 1	—			ZPY2-U4-B6		ZPY3-U4-B6	
						M8 x 1.25	—			—		ZPY3-U4-B8	
			ø6		Male thread	M5 x 0.8	ZPY1-U6-A5			ZPY2-U6-A5		—	
						M6 x 1	ZPY1-U6-A6			ZPY2-U6-A6		ZPY3-U6-A6	
						M8 x 1	—			—		ZPY3-U6-A8	
					Female thread	M4 x 0.7	ZPY1-U6-B4			—		—	
						M5 x 0.8	ZPY1-U6-B5			ZPY2-U6-B5		ZPY3-U6-B5	
						M6 x 1	—			ZPY2-U6-B6		ZPY3-U6-B6	
						M8 x 1.25	—			—		ZPY3-U6-B8	
ⒷMounting nut (Single unit)						M5 x 0.8	NTJ-015A			NTJ-015A		—	
						M6 x 1	ZPNA-M6			ZPNA-M6		ZPNA-M6	
						M8 x 1	—			—		ZPNA-M8	

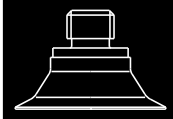

Flat Pad

Pad diameter ø10, ø15, ø20, ø25, ø30

Symbol/Form

MT: Thin flat type (With groove)

■ Adsorption surface with groove

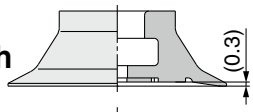



How to Order

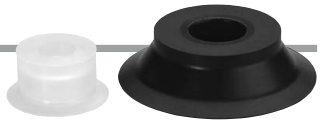

Pad unit **ZP2 − B10 MT N**

∗ Pad unit's sales unit: 10 pcs.

Pad diameter

Symbol	Pad diameter	Blast type
B10	ø10	●
B15	ø15	●
B20	ø20	●
B25	ø25	●
B30	ø30	●

∗ Blast type: Workpieces can be removed easily.

Pad material

Symbol	Material
N	NBR
S	Silicone rubber∗1
F	FKM
GN	Conductive NBR
GS	Conductive silicone rubber

∗1 Compliant with the FDA (USA Food and Drug Administration) regulation 21CFR§177.2600 for "Rubber articles intended for repeated use"

Pad form

Symbol	Form
MT	Thin flat type (With groove)

Mounting Bracket Part Nos.

Adapter Assembly	p. 288

■ For the adsorption of thin sheets or film Reduced deformation of flat surfaces during adsorption

∗ Not suitable for transferring workpieces which apply a load.

∗ Wrinkling may be generated depending on the sheet thickness. Confirm the thickness before use.

Dimensions: Pad Unit

ZP2-B10MT□

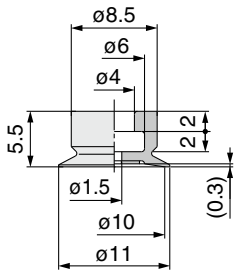

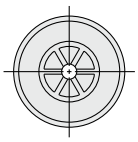

ZP2-B15MT□

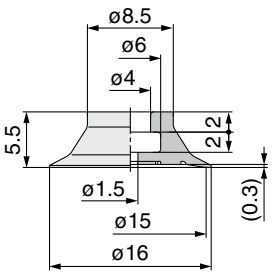

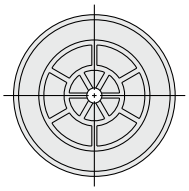

ZP2-B20MT□

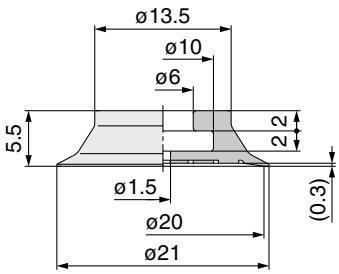

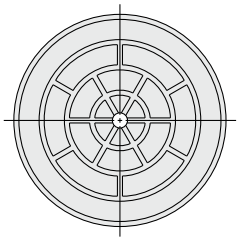

ZP2-B25MT□

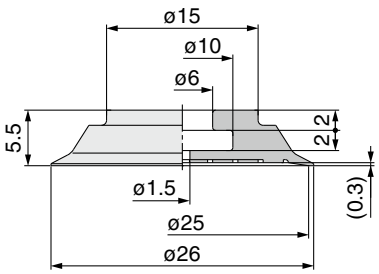

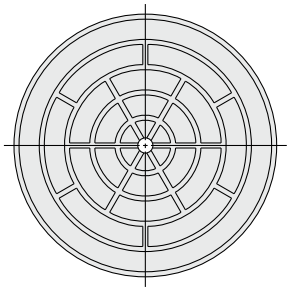

ZP2-B30MT□

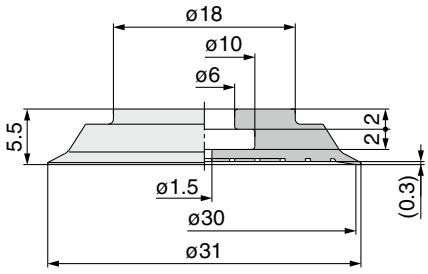

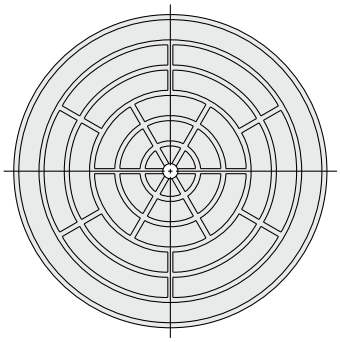

Adapter Mounting Dimensions

If an adapter will be made by the customer, design the adapter with the dimensions shown below.

Applicable pad B10MT/B15MT

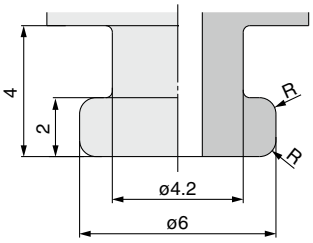

Applicable pad B20MT/B25MT/B30MT

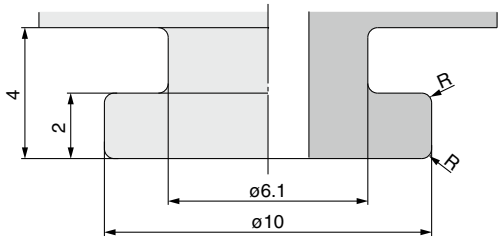

∗ The R part has to be smooth with no corners.



How to Order

With adapter **ZP2 – T B10 MT N – H5**

Vacuum inlet direction

Symbol	Direction
T	Vertical

Pad diameter

Symbol	Pad diameter	Blast type
B10	ø10	●
B15	ø15	●
B20	ø20	●
B25	ø25	●
B30	ø30	●

∗ Blast type: Workpieces can be removed easily.
∗ Use a commercially available sealant for mounting.

Pad form

Symbol	Form
MT	Thin flat type (With groove)

Connection thread

Thread size (Symbol) \ Pad diameter (Symbol)	B10	B15	B20	B25	B30
H5 (M5 x 0.8 Male thread)	●	●	●	●	●
B5 (M5 x 0.8 Female thread)	●	●	—	—	—

Pad material

Symbol	Material
N	NBR
S	Silicone rubber∗1
F	FKM
GN	Conductive NBR
GS	Conductive silicone rubber

∗1 Compliant with the FDA (USA Food and Drug Administration) regulation 21CFR§177.2600 for "Rubber articles intended for repeated use"

∗ The pad is shipped together but does not come assembled.

Dimensions: With Adapter

ZP2-TB10MT□-H5

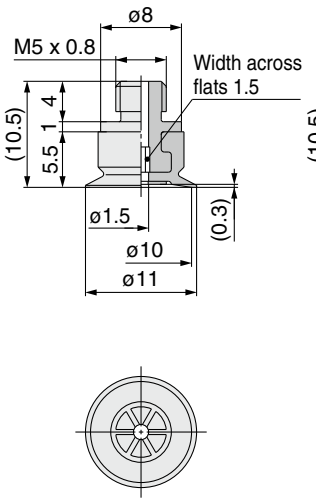

ZP2-TB15MT□-H5

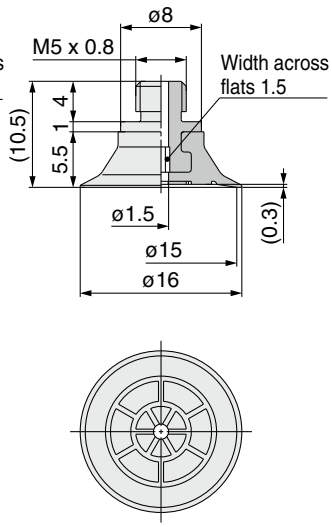

ZP2-TB20MT□-H5

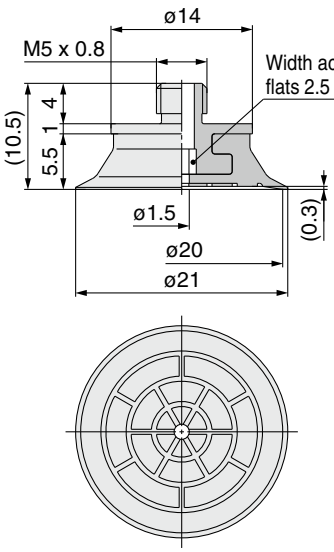

ZP2-TB25MT□-H5

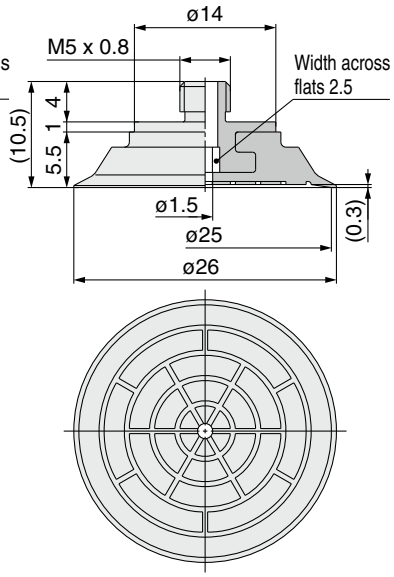

ZP2-TB30MT□-H5

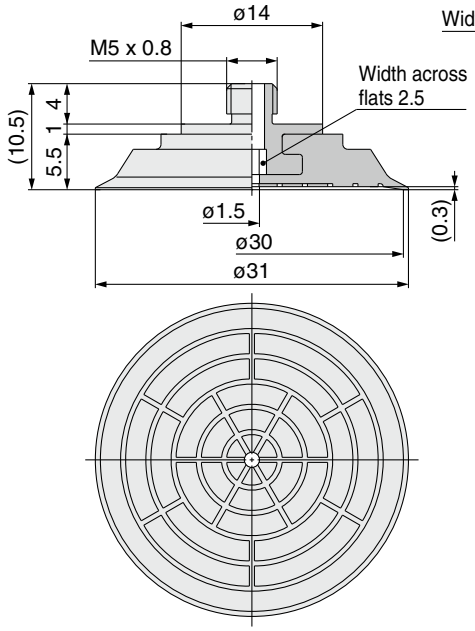

ZP2-TB10MT□-B5

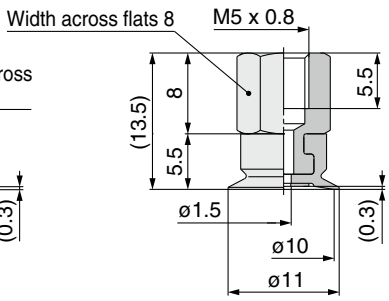

ZP2-TB15MT□-B5

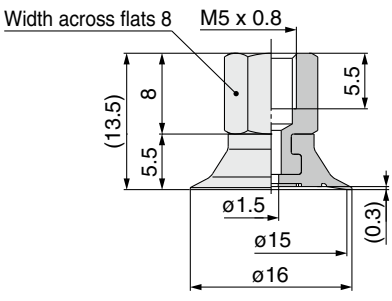

Flat Pad *ZP2 Series*
Mounting Bracket Assembly

Adapter Assembly

Product part no.

ZP2 - T ① MT □ - ②

- ① Pad diameter
- MT Thin flat type (With groove)
- □ Pad material
- ② Connection thread (Male/Female thread)

Component parts

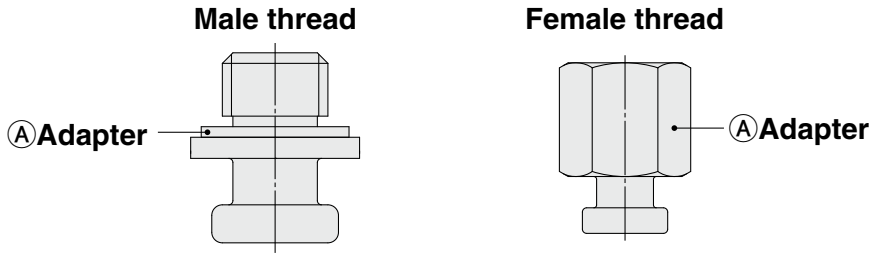

			Symbol	❶ Pad diameter symbol				
				B10	B15	B20	B25	B30
Ⓐ Adapter	❷ Connection thread	Male thread	M5 x 0.8	H5	ZP2A-M02		ZP2A-M03	
		Female thread	M5 x 0.8	B5	ZP2A-M04		—	

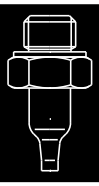

Nozzle Pad

Pad diameter ø0.8, ø1.1

Symbol/Form

AN: Nozzle type

■For the adsorption of small components (such as IC chips)

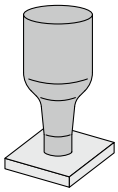

How to Order



Pad unit **ZP2 − 08 AN N**

∗ Pad unit's sales unit: 10 pcs.

Pad diameter

Symbol	Pad diameter
08	ø0.8
11	ø1.1

Pad form

Symbol	Form
AN	Nozzle type

Pad material

Symbol	Material
N	NBR
S	Silicone rubber∗1
U	Urethane rubber
F	FKM
GN	Conductive NBR
GS	Conductive silicone rubber

∗1 Compliant with the FDA (USA Food and Drug Administration) regulation 21CFR§177.2600 for "Rubber articles intended for repeated use"

Dimensions: Pad Unit

ZP2-08AN□

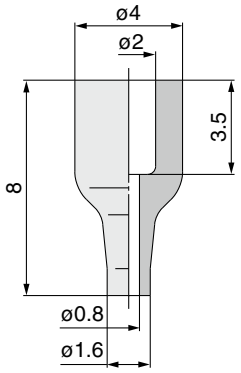

ZP2-11AN□

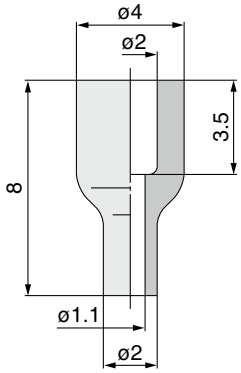

Adapter Mounting Dimensions

If an adapter will be made by the customer, design the adapter with the dimensions shown below.

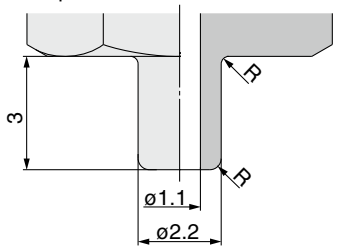

∗ The R part has to be smooth with no corners.

How to Order



With adapter **ZP2 − T 08 AN N − A5**

Vacuum inlet direction

Symbol	Direction
T	Vertical

Pad diameter

Symbol	Pad diameter
08	ø0.8
11	ø1.1

Pad form

Symbol	Form
AN	Nozzle type

Pad material

Symbol	Material
N	NBR
S	Silicone rubber∗1
U	Urethane rubber
F	FKM
GN	Conductive NBR
GS	Conductive silicone rubber

∗1 Compliant with the FDA (USA Food and Drug Administration) regulation 21CFR§177.2600 for "Rubber articles intended for repeated use"

Mounting

Symbol	Thread size
A5	M5 x 0.8

∗ The pad is shipped together but does not come assembled.

Dimensions: With Adapter

ZP2-T08AN□-A5

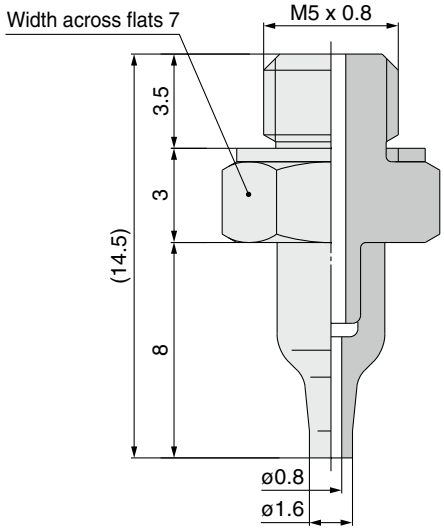

ZP2-T11AN□-A5

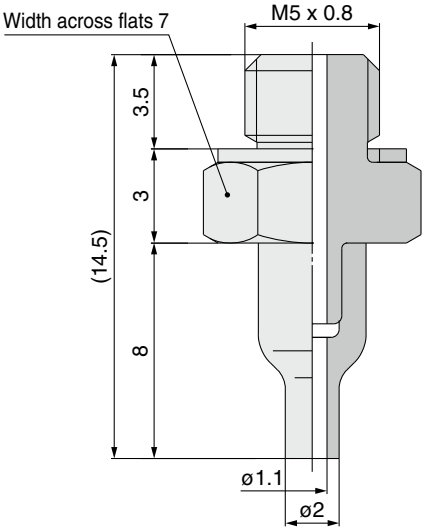

Adapter assembly unit

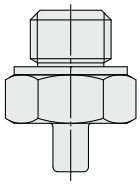

Part no. (With gasket):
ZP2A-Z21P
Gasket part no. (Single unit):
M-5G2

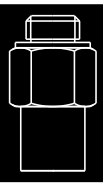

Sponge Pad

Pad diameter ø4, ø6, ø8, ø10, ø15

Symbol/Form

S: Sponge

■For the adsorption of workpieces with bumps

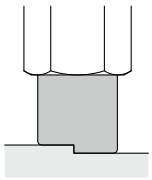

Mounting Bracket Part Nos.

Adapter Assembly	p. 293

How to Order

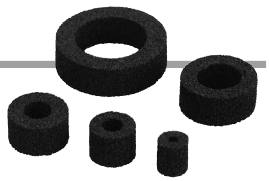

Pad unit **ZP2 − 06 S GS**

∗ Pad unit's sales unit: 10 pcs.

Pad O.D.

Symbol	Pad diameter
04	ø4
06	ø6
08	ø8
10	ø10
15	ø15

Pad material

Symbol	Material
GS	Conductive silicone rubber
GC	Conductive CR

Pad form

Symbol	Form
S	Sponge

Dimensions: Pad Unit

ZP2-04S□

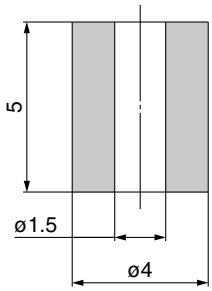

ZP2-06S□

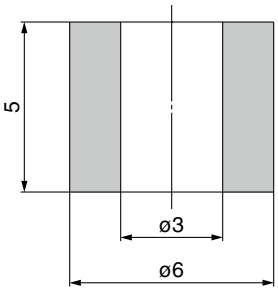

ZP2-08S□

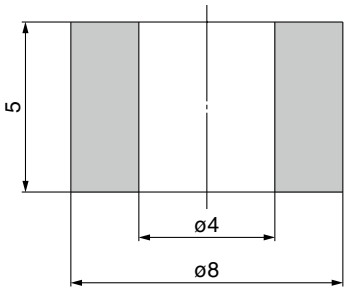

ZP2-10S□

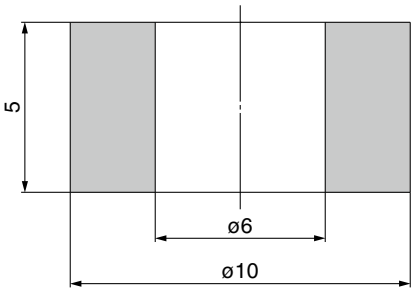

ZP2-15S□

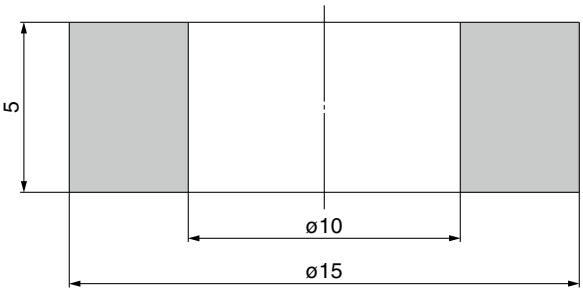

Adapter Mounting Dimensions

If an adapter will be made by the customer, design the adapter with the dimensions shown below.

Applicable pad 04S

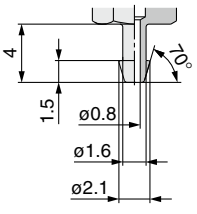

Applicable pad 06S

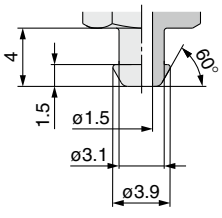

Applicable pad 08S

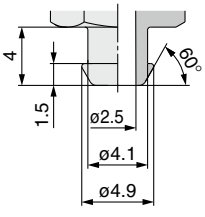

Applicable pad 10S

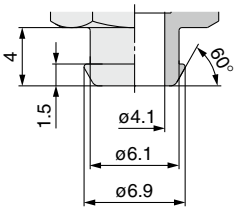

Applicable pad 15S

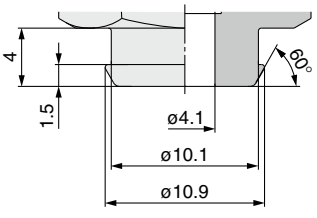

How to Order

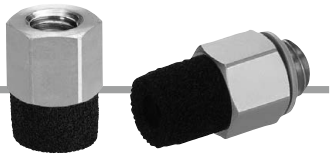

With adapter **ZP2 – T 04 S GS – A3**

Vacuum inlet direction

Symbol	Direction
T	Vertical

Pad O.D.

Symbol	Pad diameter
04	ø4
06	ø6
08	ø8
10	ø10
15	ø15

Pad form

Symbol	Form
S	Sponge

Pad material

Symbol	Material
GS	Conductive silicone rubber
GC	Conductive CR

Connection thread

Symbol	Thread size	Applicable pad O.D. symbol				
		04	06	08	10	15
A3	M3 x 0.5 (Male thread)	●	—	—	—	—
A5	M5 x 0.8 (Male thread)	—	●	●	●	●
B3	M3 x 0.5 (Female thread)	●	—	—	—	—
B5	M5 x 0.8 (Female thread)	—	●	●	●	●

∗ The pad is shipped together but does not come assembled.

Dimensions: With Adapter

ZP2-T04S□-A3

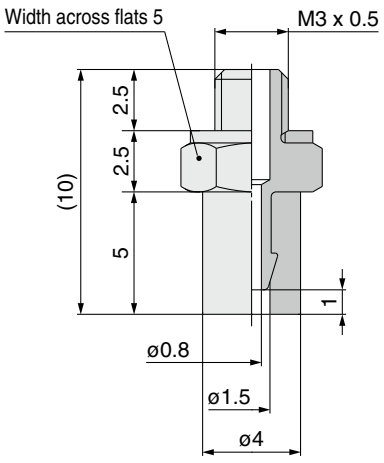

ZP2-T06S□-A5

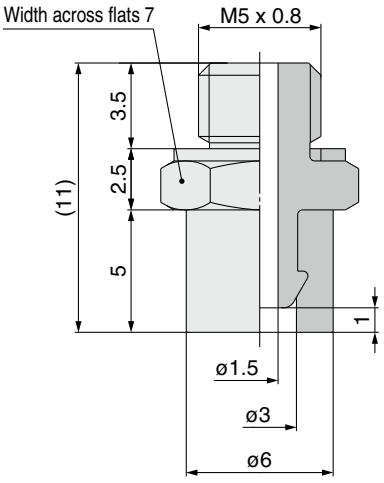

ZP2-T08S□-A5

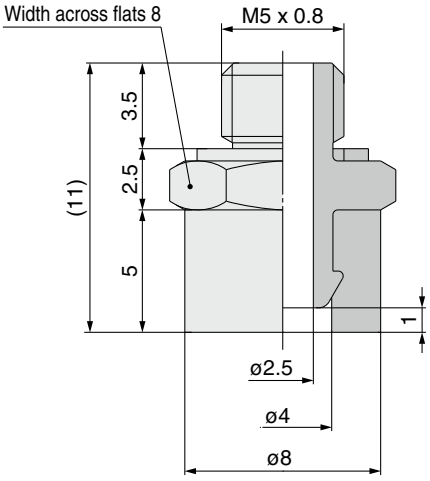

Dimensions: With Adapter

ZP2-T10S□-A5

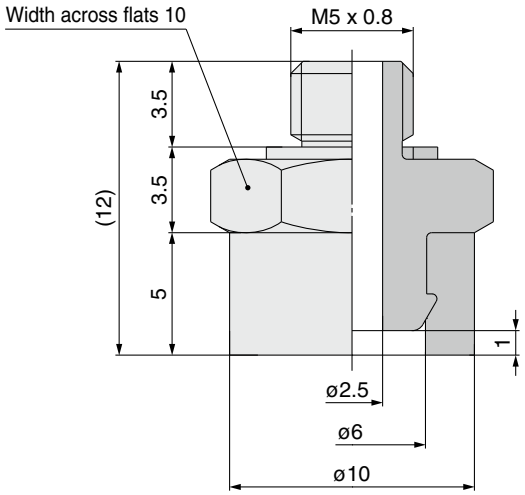

ZP2-T15S□-A5

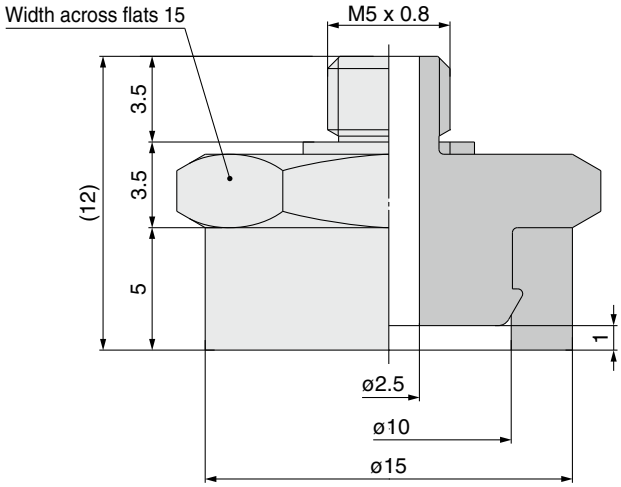

ZP2-T04S□-B3

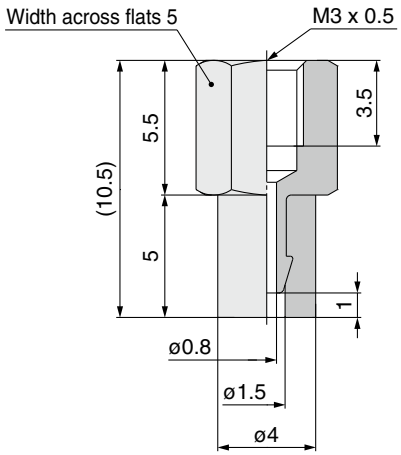

ZP2-T06S□-B5

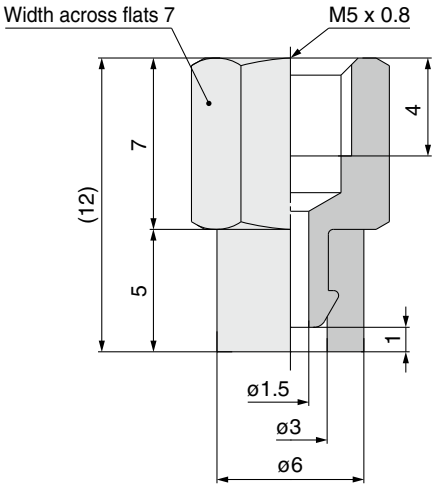

ZP2-T08S□-B5

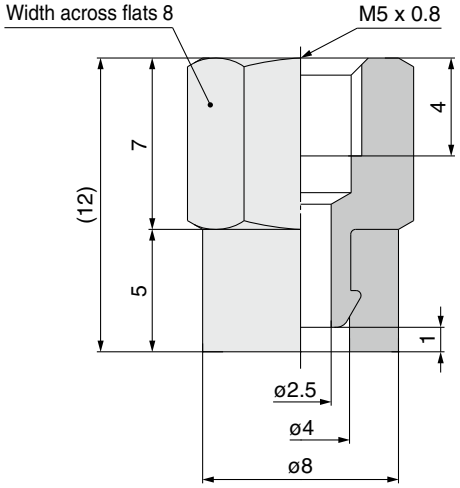

ZP2-T10S□-B5

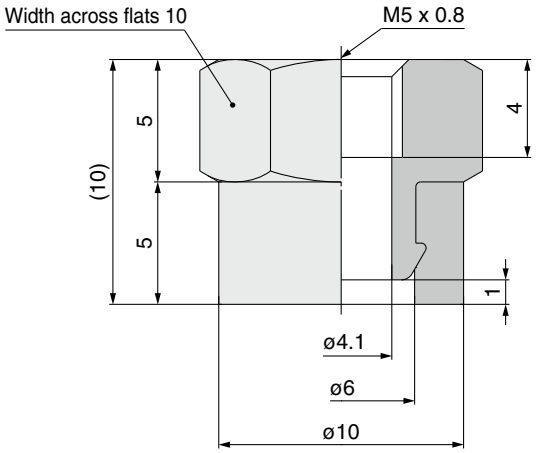

ZP2-T15S□-B5

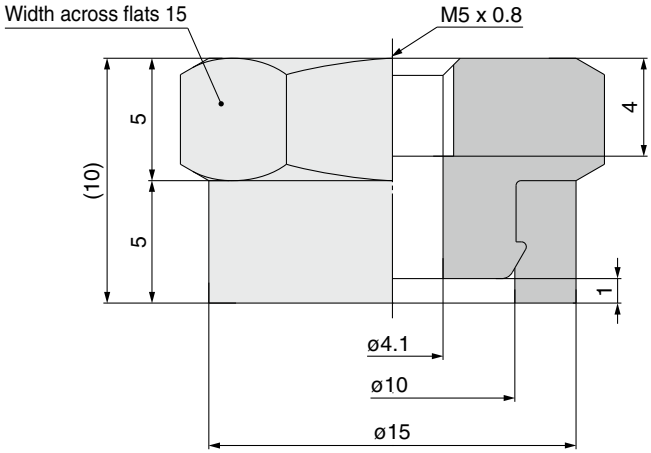

Sponge Pad *ZP2 Series*
Mounting Bracket Assembly

Adapter Assembly

Product part no.

ZP2 - T ① S □ - ②

- ① Pad diameter
- S Sponge
- □ Pad material
- ② Connection thread (Male/Female thread)

Component parts

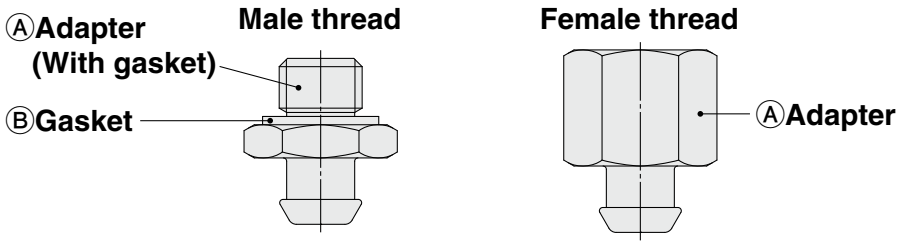

			Symbol	❶ Pad diameter symbol				
				04	06	08	10	15
Ⓐ Adapter	❷ Connection thread	Male thread	M3 x 0.5	A3	ZP2A-S01P	—		
			M5 x 0.8	A5	—	ZP2A-S02P	ZP2A-S03P	ZP2A-S04P	ZP2A-S05P
		Female thread	M3 x 0.5	B3	ZP2A-S11	—		
			M5 x 0.8	B5	—	ZP2A-S12	ZP2A-S13	ZP2A-S14	ZP2A-S15
Ⓑ Gasket (Single unit)					M-3G2	M-5G2			

Vacuum Pad for Disk Adsorption

■For adsorbing and transferring disks of digital household electric appliances (CD, DVD)

- For adsorbing circular components like CDs and DVDs
- The bellows mechanism in the pad helps to dampen the impact to workpieces.

How to Order

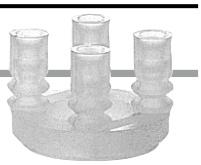

ZP2 − Z1 − 001 − S

Pad material

Symbol	Material
S	Silicone rubber*1
GS	Conductive silicone rubber

*1 Compliant with the FDA (USA Food and Drug Administration) regulation 21CFR§177.2600 for "Rubber articles intended for repeated use"

Dimensions

ZP2-Z1-001-□□

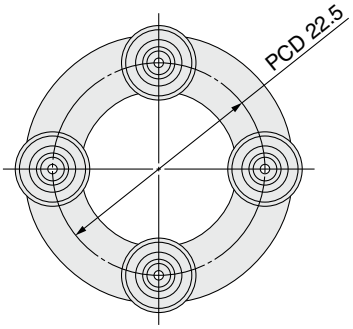

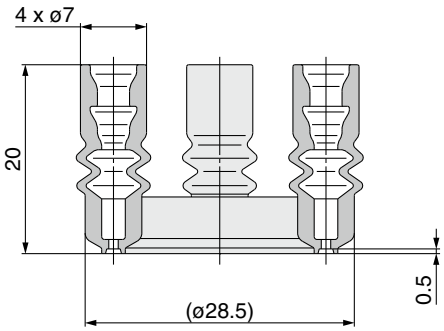

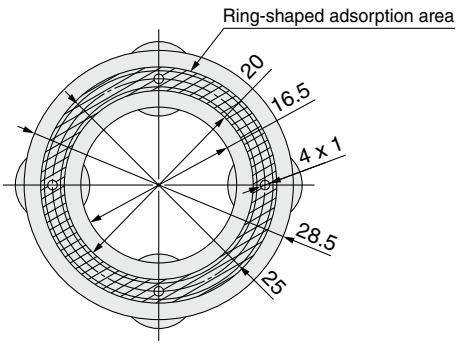

ZPT1-A5/A6 is a recommended adapter. (**Four adapters are necessary.**)

Adapter assembly unit

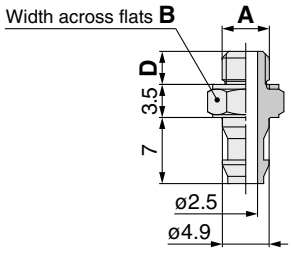

Part no. (With gasket): ZPT1-A5/A6

Dimensions

Model	A	B	D	Gasket part no. (Single unit)
ZPT1-A5	M5 x 0.8	7	3.5	M-5G2
ZPT1-A6	M6 x 1	8	4.5	M-6G

Example of attachment

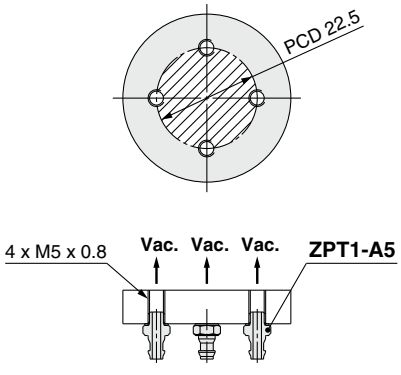

Vacuum Pad for Panel Holding

■**For adsorbing and holding the stage of LCD panels, etc.**

■**The bellows mechanism allows for complete contact with curved work surfaces.**



Dimensions

ZP2-Z002

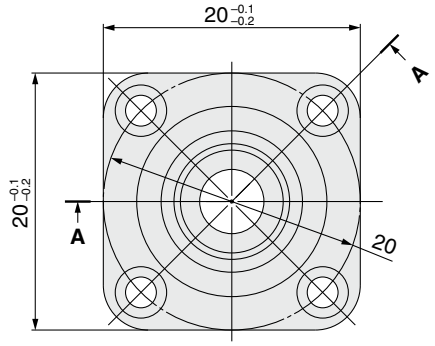

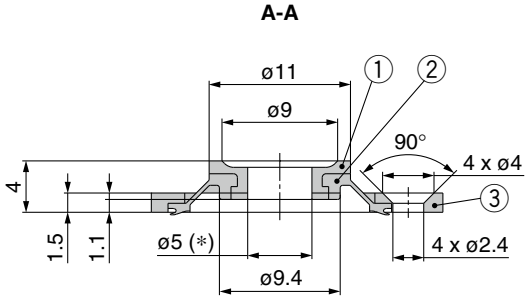

Component Parts

No.	Part no.	Description	Material	Note
1	ZP2-Z2A	Pad	PTFE	—
2	ZP2-Z2B	Joint	FKM	—
3	ZP2-Z2C	Mounting plate	Aluminum alloy	Clear anodized

ZP2-Z003

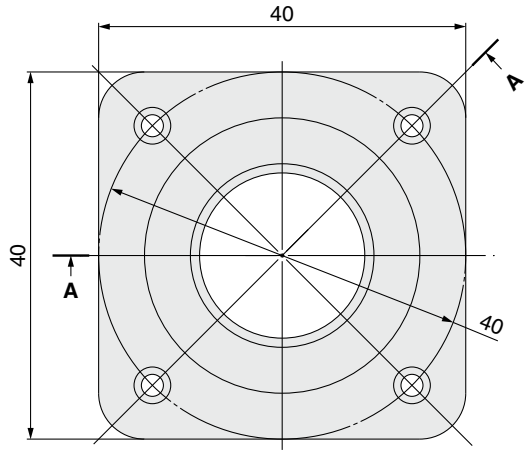

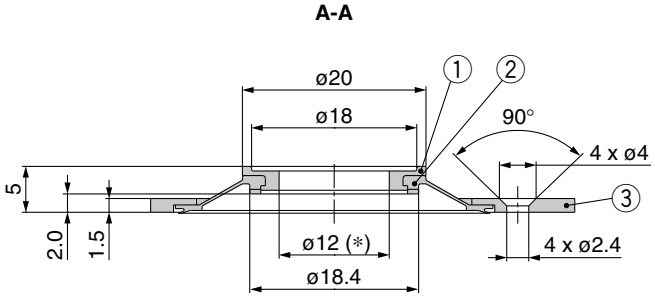

Component Parts

No.	Part no.	Description	Material	Note
1	ZP2-Z3A	Pad	PTFE	—
2	ZP2-Z3B	Joint	FKM	—
3	ZP2-Z3C	Mounting plate	Aluminum alloy	Clear anodized

Take the following points into consideration when using this product.
Customers are required to conduct the evaluation to judge whether or not the product is used.

1) This product should be used in the horizontal direction and to fix the workpiece.
2) The pad (resin) may have a more vacuum pressure leakage from the lip compared to general rubber pads. Therefore, maintain as large a flow rate as possible to minimize the pressure drop due to leakage.
3) Cannot be used for vacuum retention
4) Design the pad mounting parts while referring to the "Table 1: References for Designing Mounting Parts" shown below. Additionally, avoid applying the weight of the workpiece directly to the pad.
5) Be sure to clean the workpiece contact part of the pad before use and during periodic maintenance.

Table 1: References for Designing Mounting Parts

	Supporting point dimension	Plate hole	(Reference value) Product full stroke
ZP2-Z002	2.9 ± 0.1 mm	ø5 or less	1.1 mm
ZP2-Z003	3.0 ± 0.1 mm	ø12 or less	2.0 mm

∗ Use this product with its full stroke. Avoid using the product with a stroke less than the product stroke (at an intermediate position) or with a stroke exceeding the product stroke.

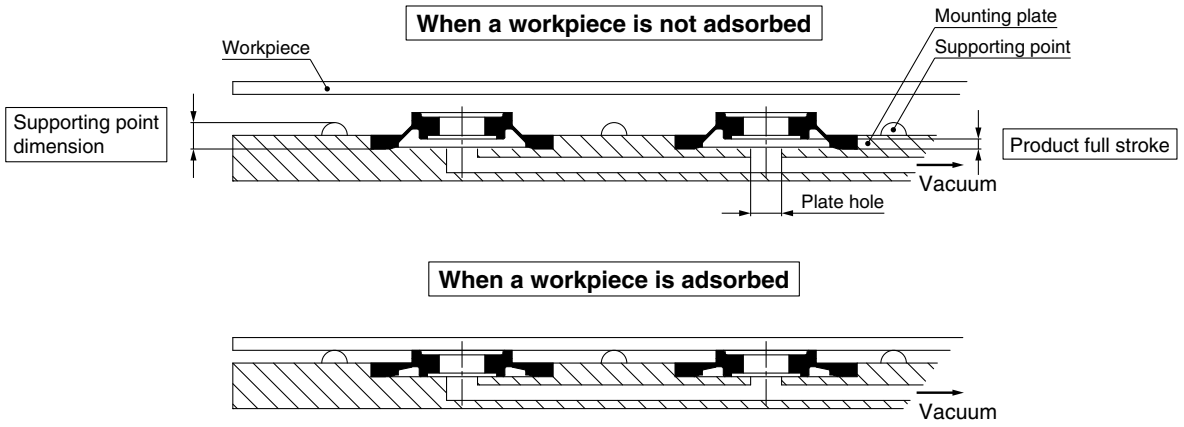

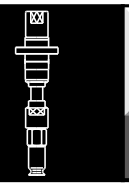

Pad with Ball Spline Buffer

Pad diameter ø2, ø4, ø6, ø8

Symbol/Form

U: Flat type

■The ball spline guide is used for buffers.

How to Order



ZP2 – T 02 U N S 6

Vacuum inlet direction

Symbol	Direction
T	Vertical

Pad diameter

Symbol	Pad diameter
02	ø2
04	ø4
06	ø6
08	ø8

Pad form

Symbol	Form
U	Flat type

Pad material

Symbol	Material
N	NBR
S	Silicone rubber*1
U	Urethane rubber
F	FKM
GN	Conductive NBR
GS	Conductive silicone rubber

Buffer specification

Symbol	Specification
S	Ball spline

Buffer stroke

Symbol	Stroke
6	6 mm

*1 Compliant with the FDA (USA Food and Drug Administration) regulation 21CFR§177.2600 for "Rubber articles intended for repeated use"

* The pad is shipped together but does not come assembled.

Buffer Specifications

Specifications		Ball spline
Stroke [mm]		6
Spring reactive force [N]	**At 0 stroke**	0.8
	At full stroke	1.1

Dimensions

ZP2-T□U□S6

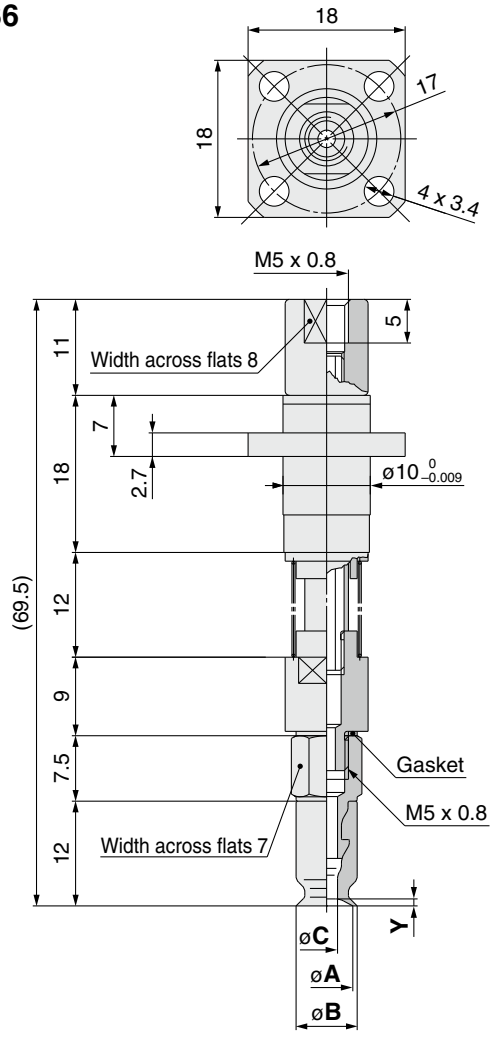

Buffer assembly unit

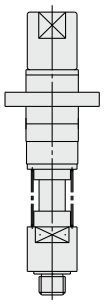

Part no. (With gasket): ZP2B-T3S6
Gasket part no. (Single unit): M-5G2

Dimensions

Model	A	B	C	Y
ZP2-T02U□S6	2	2.6	1.2	0.5
ZP2-T04U□S6	4	4.8	1.6	0.8
ZP2-T06U□S6	6	7	2.5	
ZP2-T08U□S6	8	9		1

Made to Order *ZP/ZP2 Series*

ø2 to ø340

Compact/Short-type, Thin Flat, Bellows, High Rigidity

Compact/Short-type ø2 to ø15

Compact, Space saving p. 304



Thin Flat ø5 to ø20

For the adsorption of soft workpieces such as thin sheets or vinyl p. 312



Bellows ø2 to ø20

For use where there is no space for a buffer (spring type) p. 314



High Rigidity ø32 to ø340

For heavy or large workpieces p. 317



Pad Material: ZP/ZP2 Series

Material	NBR (Nitrile rubber)	Silicone rubber*1	Urethane rubber	FKM (Fluoro rubber)	CR (Chloroprene rubber)	EPR (Ethylene propylene rubber)	Conductive NBR (Nitrile rubber)	Conductive silicone rubber
Color of rubber	Black	White	Brown	Black				
Rubber hardness HS (±5°)	A50/S	Other than high rigidity: A40/S High rigidity: A50/S	A60/S		A50/S			
Identification (Dot or stamp)	—	—	—	· 1 green dot · Ⓕ	· 1 red dot · Ⓒ	· Ⓔ	· 1 silver dot	· 2 silver dots

*1 Compliant with the FDA (USA Food and Drug Administration) regulation 21CFR§177.2600 for "Rubber articles intended for repeated use"

Variations

Variations		Symbol	Pad		Page
			Form	Diameter	
Compact Pad **Flat type** For the adsorption of general workpieces For the adsorption of workpieces with flat, non-deformed surfaces **Flat type with ribs** For workpieces which are likely to deform or for the reliable release of workpieces **Bellows type** For the adsorption of workpieces with inclined surfaces	 Single unit	U	Flat type	ø3, ø4	304
	 Single unit	C	Flat type with ribs	ø6, ø7, ø8	304
	 Single unit	B	Bellows type	ø6, ø8	304
Short-type Pad Space saving in the height direction 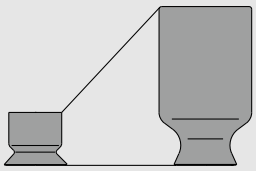	 Single unit With adapter	MU	Flat type	ø2, ø3.5 ø4, ø5, ø6 ø8, ø10 ø15	305
	 Single unit With adapter	EU		ø2, ø4, ø6 ø8, ø15	308
	 Single unit	AU		ø2, ø3, ø4 ø6, ø8	311
Thin Flat Pad For the adsorption of soft workpieces such as thin sheets or vinyl Wrinkling or deformation during adsorption is reduced.	 Single unit	UT	Thin flat type (Skirt)	ø5, ø6, ø11 ø14, ø18 ø20	312
Bellows Pad For use where there is no space for a buffer (spring type) For the adsorption of workpieces with inclined surfaces 	 Single unit With adapter	MB	Bellows type	ø4, ø6, ø8 ø10, ø15 ø20	314
	 Single unit	ZJ		ø2, ø4 ø5, ø6	316

Variations		Symbol	Pad		Page
			Form	Diameter	
Blast-type Pad Features blast treatment to create fine unevenness on the surface for improved adsorption Workpieces can be removed easily.	 Single unit	**U**	Flat type	**ø4**	**304**
	 Single unit	**C**	Flat type with ribs	**ø6, ø8**	**304**
	 Single unit	**B**	Bellows type	**ø6, ø8**	**304**
	 Single unit With adapter	**MU**	Flat type	**ø2, ø3.5 ø4, ø5, ø6 ø8, ø10 ø15**	**305**
	 Single unit With adapter	**EU**	Flat type	**ø2, ø4, ø6**	**308**
	 Single unit	**AU**	Flat type	**ø8**	**311**
	 Single unit With adapter	**MB**	Bellows type	**ø4, ø6, ø8 ø10, ø15 ø20**	**314**

Variations		Symbol	Pad		Page
			Form	Diameter	
High Rigidity Pad **High rigidity (Flat type with ribs)** Ideal for heavy or large workpieces such as CRT tubes and automobile bodies **High rigidity (Bellows type)** · Ideal for workpieces with curved surfaces · Ideal for heavy or large workpieces	 **Single unit**	**H**	High rigidity (Flat type with ribs)	**ø40, ø50 ø63, ø80 ø100, ø125**	**333**
	 **With adapter: Vacuum inlet direction** Vertical				**334**
	 **With adapter: Vacuum inlet direction** Lateral				**337**
	 **With buffer: Vacuum inlet direction** Vertical				**339**
	 **With buffer: Vacuum inlet direction** Lateral				**341**
	 **Single unit**	**HB**	High rigidity (Bellows type)		**333**
	 **With adapter: Vacuum inlet direction** Vertical				**334**
	 **With adapter: Vacuum inlet direction** Lateral				**337**
	 **With buffer: Vacuum inlet direction** Vertical				**339**
	 **With buffer: Vacuum inlet direction** Lateral				**341**

Variations		Symbol	Pad		Page
			Form	Diameter	
High Rigidity Ball Joint Pad For the adsorption of workpieces with inclined or curved surfaces 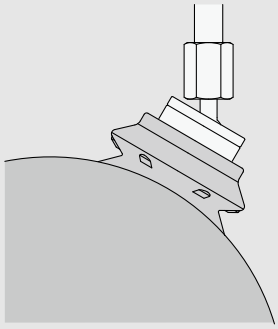	 **With adapter: Vacuum inlet direction** Vertical	**H**	High rigidity (Flat type with ribs)	ø**40** ø**50** ø**63** ø**80** ø**100** ø**125**	**321**
	 **With adapter: Vacuum inlet direction** Lateral				**322**
	 **With buffer: Vacuum inlet direction** Vertical				**323**
	 **With buffer: Vacuum inlet direction** Lateral				**325**
	 **With adapter: Vacuum inlet direction** Vertical	**HB**	High rigidity (Bellows type)	ø**40** ø**50** ø**63** ø**80** ø**100** ø**125**	**327**
	 **With adapter: Vacuum inlet direction** Lateral				**328**
	 **With buffer: Vacuum inlet direction** Vertical				**329**
	 **With buffer: Vacuum inlet direction** Lateral				**331**

Variations		Symbol	Pad		Page
			Form	Diameter	
High Rigidity Pad For heavy or large workpieces 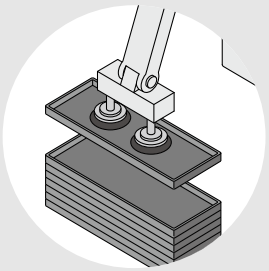		**H**	High rigidity (Flat type with ribs)	**ø32, ø300 ø340**	**317**
		**HT**	High rigidity (Thin flat type with ribs)	**ø150, ø250**	**317**
		**HB**	High rigidity (Bellows type)	**ø32, ø150**	**319**
		**HW**	High rigidity (Oval type)	**30 x 50**	**320**

Compact Pad

Pad diameter ø3, ø4, ø6, ø7, ø8

Symbol/Form

U: Flat type
C: Flat type with ribs
B: Bellows type

■**5 types of ø3 to ø8 are added.**

■**Applicable for the ZP series adapter**

Mounting Bracket Part Nos.

Adapter Assembly	p. 313

How to Order

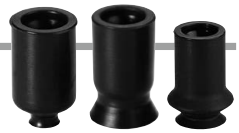

Pad unit **ZP2 − 03 U N**

∗ Pad unit's sales unit: 10 pcs.

Pad diameter

Symbol	Pad diameter	Blast type
03	ø3	—
B04	ø4	●
B06	ø6	●
07	ø7	—
B08	ø8	●

∗ Blast type: Workpieces can be removed easily.

Pad material

Symbol	Material
N	NBR
S	Silicone rubber∗1
U	Urethane rubber
F	FKM
GN	Conductive NBR
GS	Conductive silicone rubber

∗1 Compliant with the FDA (USA Food and Drug Administration) regulation 21CFR§177.2600 for "Rubber articles intended for repeated use"

Pad form—Pad diameter

Pad form \ Pad diameter (Symbol)	03	B04	B06	07	B08
U (Flat type)	●	●	—	—	—
C (Flat type with ribs)	—	—	●	●	●
B (Bellows type)	—	—	●	—	●

Dimensions: Pad Unit

ZP2-03U□

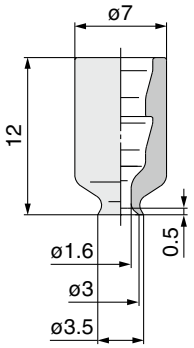

ZP2-B04U□

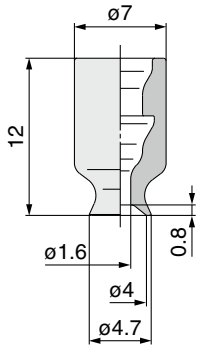

ZP2-B06B□

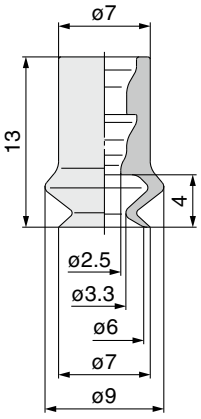

ZP2-B08B□

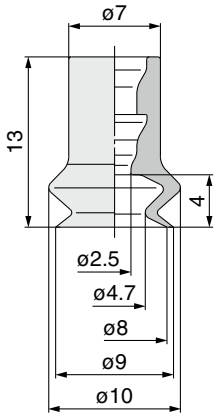

ZP2-B06C□

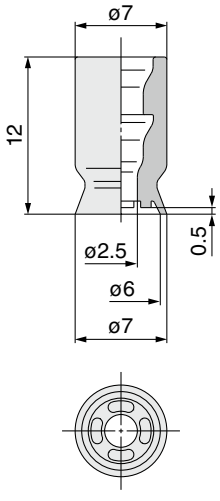

ZP2-07C□

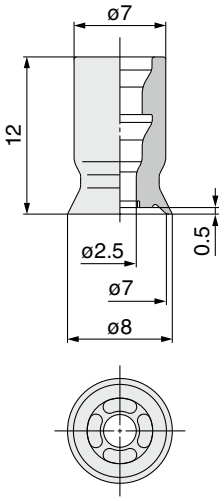

ZP2-B08C□

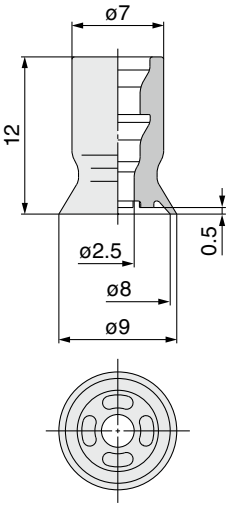

Adapter Mounting Dimensions

If an adapter will be made by the customer, design the adapter with the dimensions shown below.

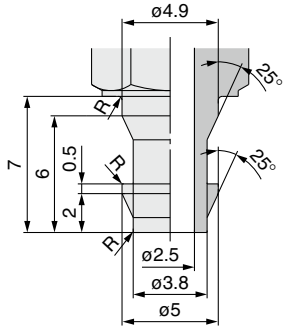

∗ The R part has to be smooth with no corners.

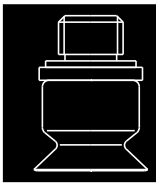

Short-type Pad

Pad diameter ø2, ø3.5, ø4, ø5, ø6, ø8, ø10, ø15

Symbol/Form

MU: Flat type

■Space saving in the height direction

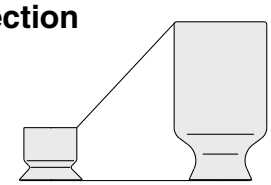

How to Order



Pad unit **ZP2 − B02 MU N**

∗ Pad unit's sales unit: 10 pcs.

Pad diameter

Symbol	Pad diameter	Blast type
B02	ø2	●
B035	ø3.5	●
B04	ø4	●
B05	ø5	●
B06	ø6	●
B08	ø8	●
B10	ø10	●
B15	ø15	●

∗ Blast type: Workpieces can be removed easily.

Pad form

Symbol	Form
MU	Flat type

Pad material

Symbol	Material
N	NBR
S	Silicone rubber∗1
U	Urethane rubber
F	FKM
GN	Conductive NBR
GS	Conductive silicone rubber

∗1 Compliant with the FDA (USA Food and Drug Administration) regulation 21CFR§177.2600 for "Rubber articles intended for repeated use"

Dimensions: Pad Unit

ZP2-B02MU□

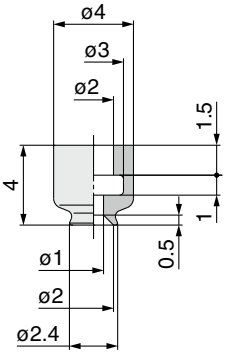

ZP2-B035MU□

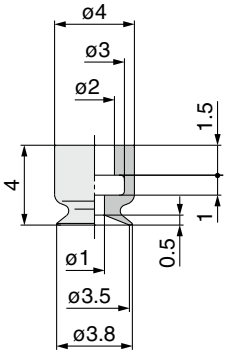

ZP2-B04MU□

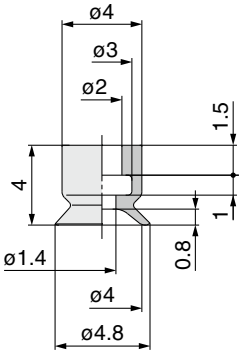

ZP2-B05MU□

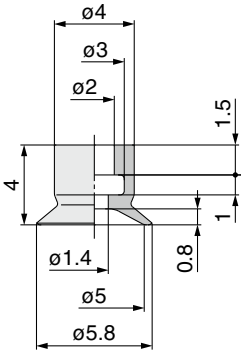

ZP2-B06MU□

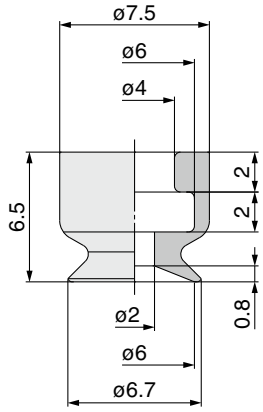

ZP2-B08MU□

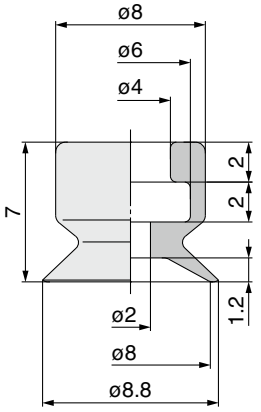

ZP2-B10MU□

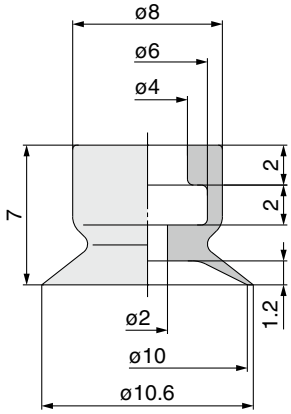

ZP2-B15MU□

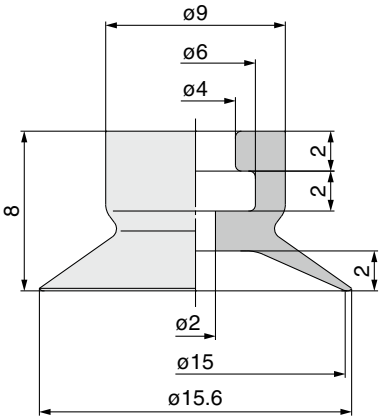

Adapter Mounting Dimensions

If an adapter will be made by the customer, design the adapter with the dimensions shown below.

Applicable pad
B02MU/B035MU/B04MU/B05MU

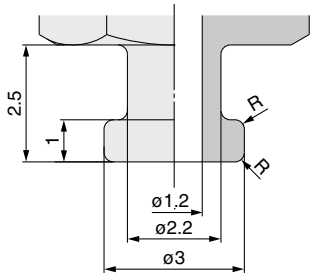

Applicable pad
B06MU/B08MU/B10MU/B15MU

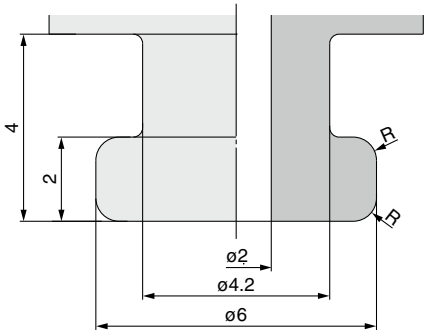

∗ The R part has to be smooth with no corners.
∗ Refer to page 306 for adapter applicable to the ZP2 series.



How to Order

With adapter **ZP2 – T B02 MU N – A3**

Vacuum inlet direction

Symbol	Direction
T	Vertical

Pad diameter

Symbol	Pad diameter	Blast type
B02	ø2	●
B035	ø3.5	●
B04	ø4	●
B05	ø5	●
B06	ø6	●
B08	ø8	●
B10	ø10	●
B15	ø15	●

∗ Blast type: Workpieces can be removed easily.

Pad form

Symbol	Form
MU	Flat type

Mounting

Thread size \ Pad diameter (Symbol)	B02	B035	B04	B05	B06	B08	B10	B15
A3 (M3 x 0.5 Male thread)	●	●	●	●	—	—	—	—
H5 (M5 x 0.8 Male thread)	—	—	—	—	●	●	●	●
B5 (M5 x 0.8 Female thread)	—	—	—	—	●	●	●	●

Pad material

Symbol	Material
N	NBR
S	Silicone rubber∗1
U	Urethane rubber
F	FKM
GN	Conductive NBR
GS	Conductive silicone rubber

∗1 Compliant with the FDA (USA Food and Drug Administration) regulation 21CFR§177.2600 for "Rubber articles intended for repeated use"

Replacement Part Nos.

Model	Pad unit part no.∗1	Adapter part no. (With gasket)	Gasket part no. (Single unit)
ZP2-TB02MU□-A3	ZP2-B02MU□	ZP2A-M01P	M-3G2
ZP2-TB035MU□-A3	ZP2-B035MU□		
ZP2-TB04MU□-A3	ZP2-B04MU□		
ZP2-TB05MU□-A3	ZP2-B05MU□		
ZP2-TB06MU□-H5	ZP2-B06MU□	ZP2A-M02P	M-5G2
ZP2-TB08MU□-H5	ZP2-B08MU□		
ZP2-TB10MU□-H5	ZP2-B10MU□		
ZP2-TB15MU□-H5	ZP2-B15MU□		
ZP2-TB06MU□-B5	ZP2-B06MU□	ZP2A-M04	—
ZP2-TB08MU□-B5	ZP2-B08MU□		
ZP2-TB10MU□-B5	ZP2-B10MU□		
ZP2-TB15MU□-B5	ZP2-B15MU□		

∗1 Pad unit's sales unit: 10 pcs.
∗ □ in the table indicates the pad material

∗ The pad is shipped together but does not come assembled.

Dimensions: With Adapter

ZP2-TB02MU□-A3

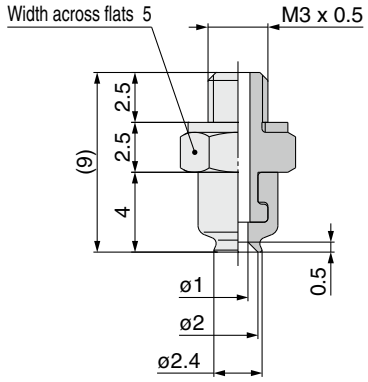

ZP2-TB035MU□-A3

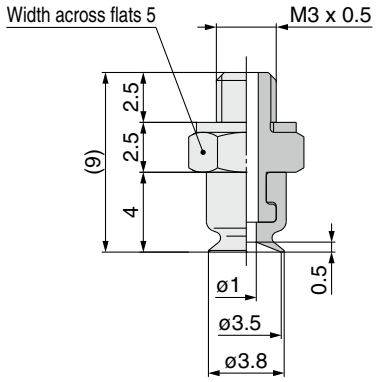

ZP2-TB04MU□-A3

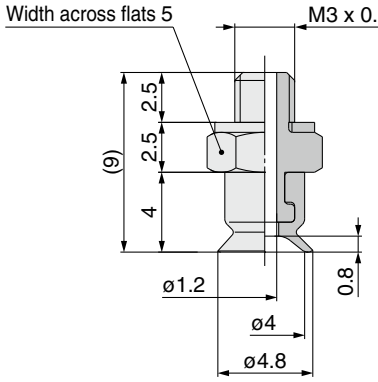

ZP2-TB05MU□-A3

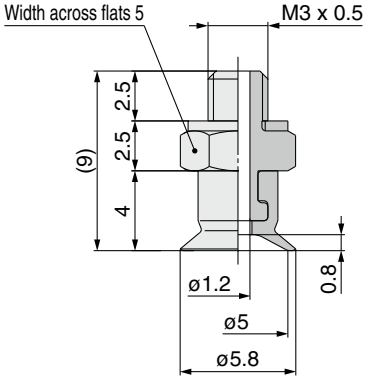

ZP2-TB06MU□-H5

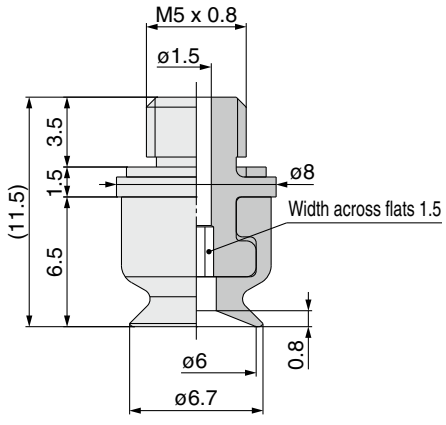

ZP2-TB08MU□-H5

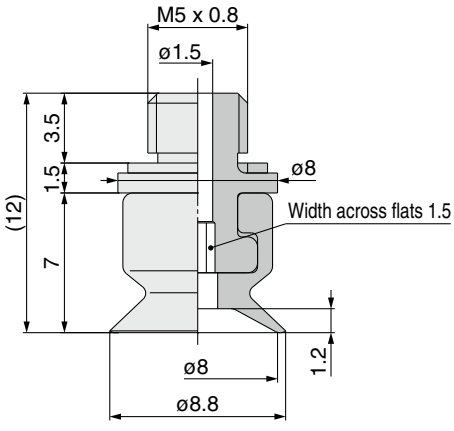

Dimensions: With Adapter

ZP2-TB10MU□-H5

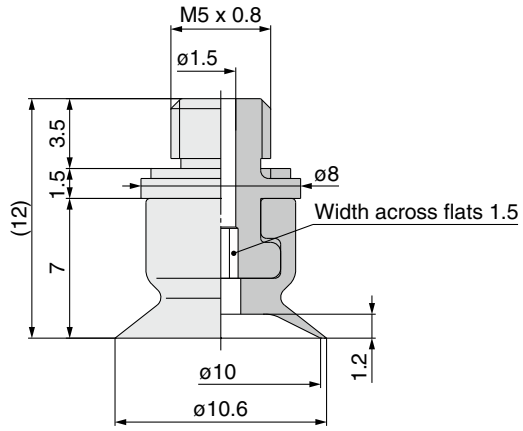

ZP2-TB15MU□-H5

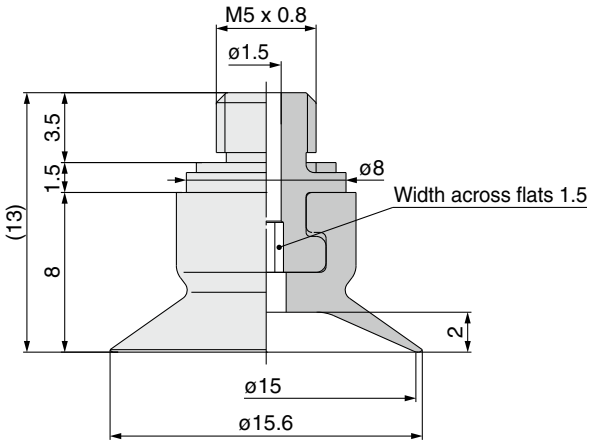

ZP2-TB06MU□-B5

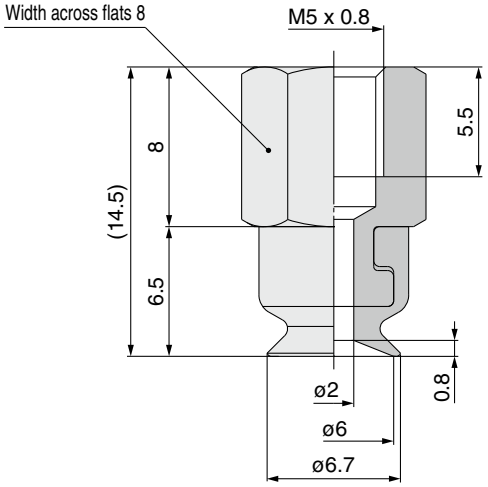

ZP2-TB08MU□-B5

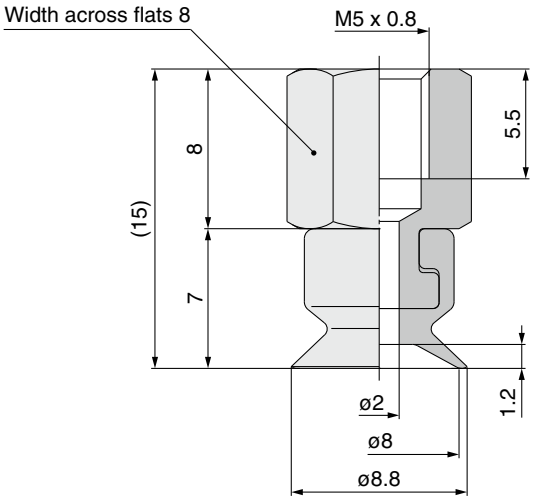

ZP2-TB10MU□-B5

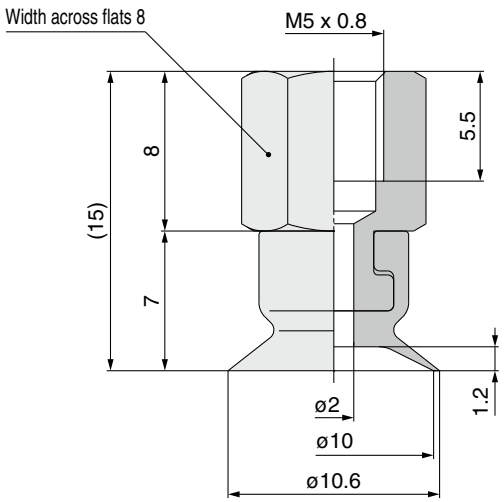

ZP2-TB15MU□-B5

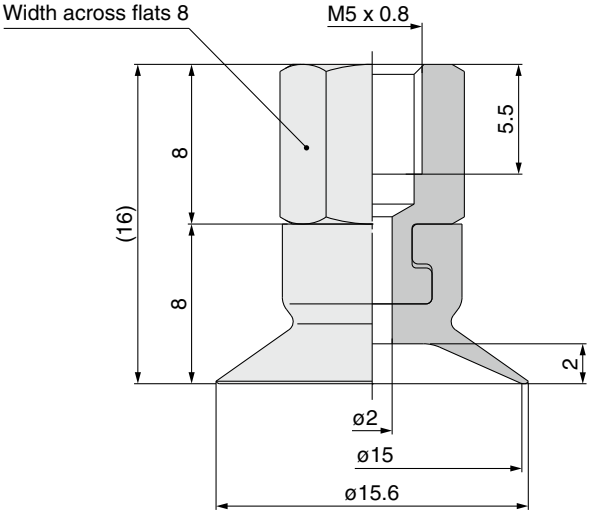

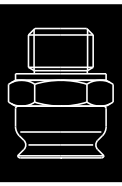

Short-type Pad

Pad diameter ø2, ø4, ø6, ø8, ø15

Symbol/Form

EU: Flat type

■Space saving in the height direction

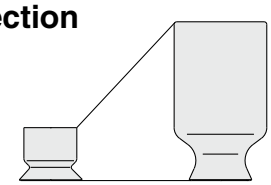

How to Order



Pad unit **ZP2 – B02 EU N**

∗ Pad unit's sales unit: 10 pcs.

Pad diameter

Symbol	Pad diameter	Blast type
B02	ø2	●
B04	ø4	●
B06	ø6	●
08	ø8	—
15	ø15	—

∗ Blast type: Workpieces can be removed easily.

Pad material

Symbol	Material
N	NBR
S	Silicone rubber∗1
U	Urethane rubber
F	FKM
GN	Conductive NBR
GS	Conductive silicone rubber

∗1 Compliant with the FDA (USA Food and Drug Administration) regulation 21CFR§177.2600 for "Rubber articles intended for repeated use"

Pad form

Symbol	Form
EU	Flat type

Dimensions: Pad Unit

ZP2-B02EU□

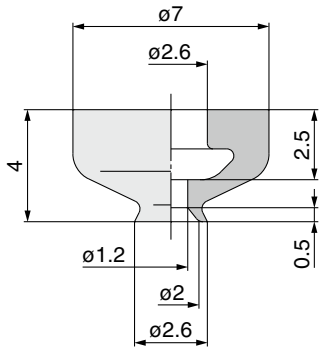

ZP2-B04EU□

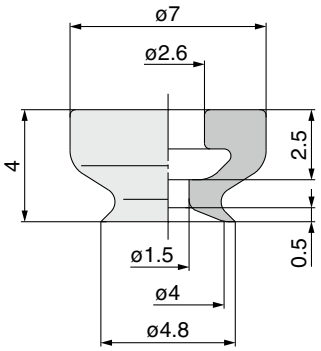

ZP2-B06EU□

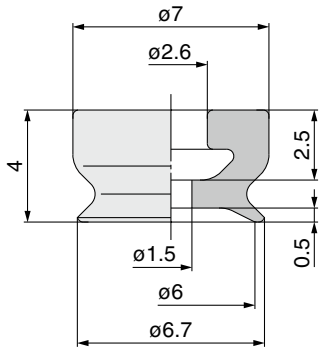

ZP2-08EU□

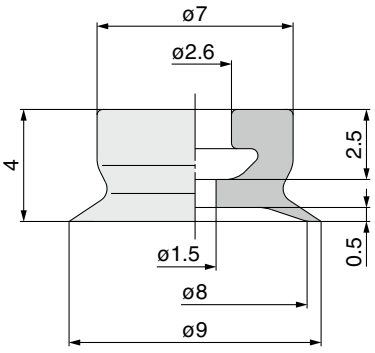

ZP2-15EU□

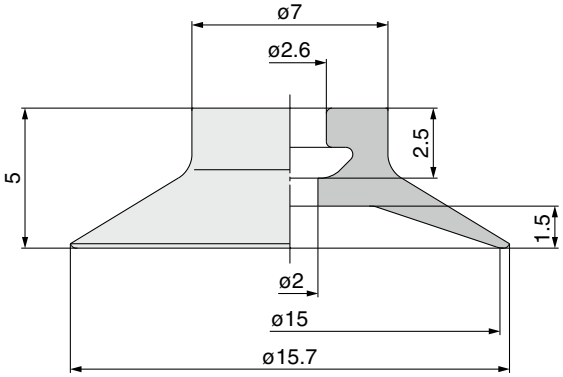

Adapter Mounting Dimensions

If an adapter will be made by the customer, design the adapter with the dimensions shown below.

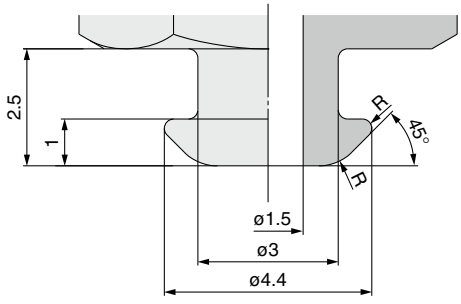

∗ The R part has to be smooth with no corners.

∗ Refer to page 309 for adapter applicable to the ZP2 series.



How to Order

With adapter **ZP2 − T B02 EU N − A5**

Vacuum inlet direction

Symbol	Direction
T	Vertical

Pad diameter

Symbol	Pad diameter	Blast type
B02	ø2	●
B04	ø4	●
B06	ø6	●
08	ø8	—
15	ø15	—

∗ Blast type: Workpieces can be removed easily.

Pad form

Symbol	Form
EU	Flat type

Pad material

Symbol	Material
N	NBR
S	Silicone rubber∗1
U	Urethane rubber
F	FKM
GN	Conductive NBR
GS	Conductive silicone rubber

∗1 Compliant with the FDA (USA Food and Drug Administration) regulation 21CFR§177.2600 for "Rubber articles intended for repeated use"

Mounting

Symbol	Thread size	Adapter type
A5	M5 x 0.8	Hexagon O.D.
H5	M5 x 0.8	Hexagon socket head

Replacement Part Nos.

Model	Pad unit part no.∗1	Adapter part no. (With gasket)	Gasket part no. (Single unit)
ZP2-TB02EU□-A5	ZP2-B02EU□	ZP2A-Z01P	M-5G2
ZP2-TB04EU□-A5	ZP2-B04EU□		
ZP2-TB06EU□-A5	ZP2-B06EU□		
ZP2-T08EU□-A5	ZP2-08EU□		
ZP2-T15EU□-A5	ZP2-15EU□		
ZP2-TB02EU□-H5	ZP2-B02EU□	ZP2A-Z02P	
ZP2-TB04EU□-H5	ZP2-B04EU□		
ZP2-TB06EU□-H5	ZP2-B06EU□		
ZP2-T08EU□-H5	ZP2-08EU□		
ZP2-T15EU□-H5	ZP2-15EU□		

∗1 Pad unit's sales unit: 10 pcs.

∗ □ in the table indicates the pad material

∗ The pad is shipped together but does not come assembled.

Dimensions: With Adapter

ZP2-TB02EU□-A5

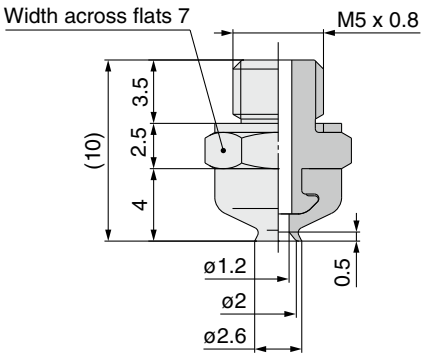

ZP2-TB04EU□-A5

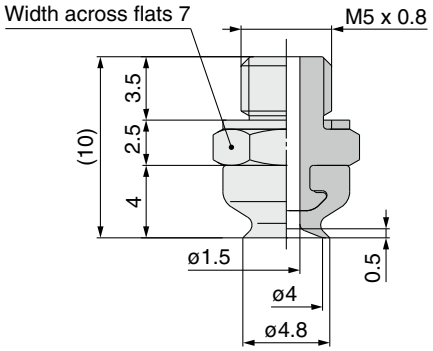

ZP2-TB06EU□-A5

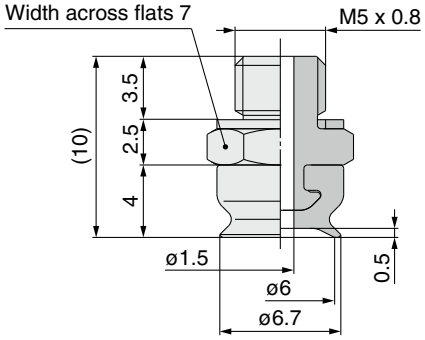

ZP2-T08EU□-A5

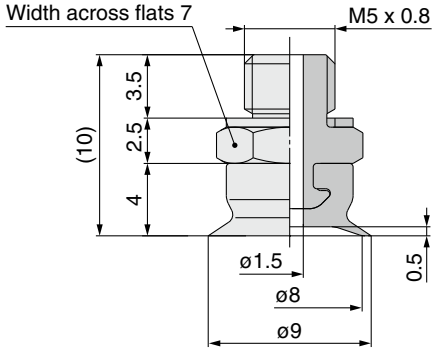

ZP2-T15EU□-A5

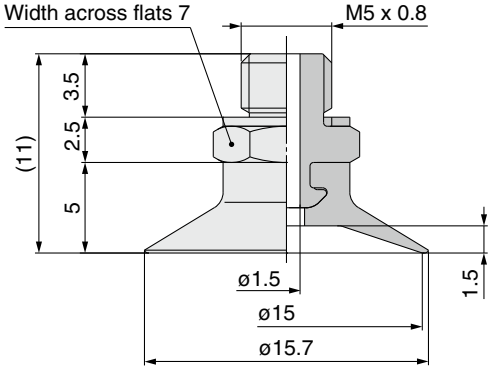

Dimensions: With Adapter

ZP2-TB02EU□-H5

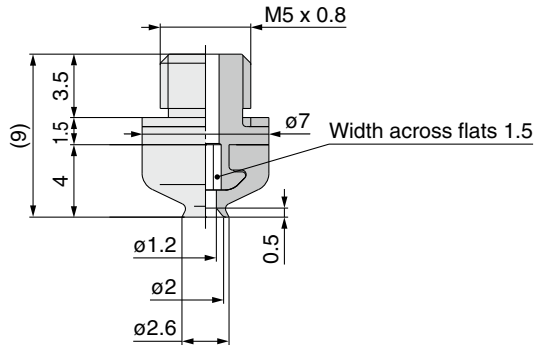

ZP2-TB04EU□-H5

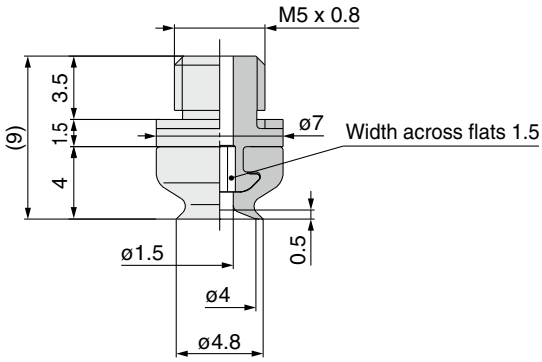

ZP2-TB06EU□-H5

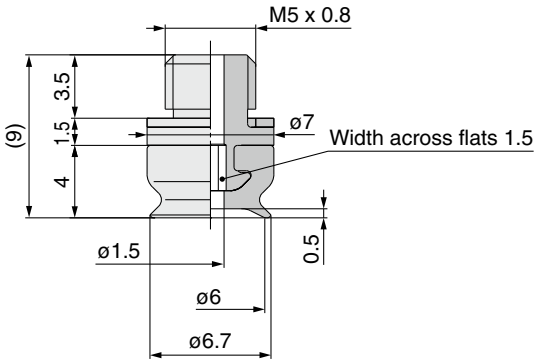

ZP2-T08EU□-H5

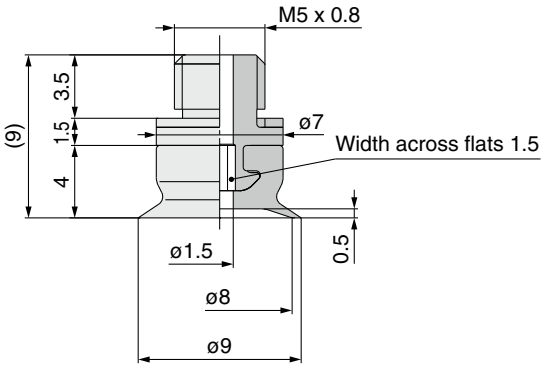

ZP2-T15EU□-H5

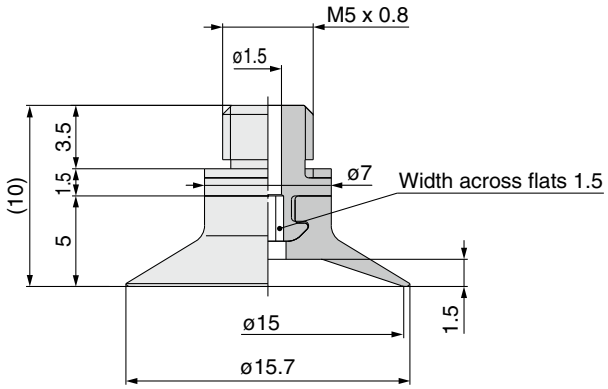

Short-type Pad

Pad diameter ø2, ø3, ø4, ø6, ø8

Symbol/Form

AU: Flat type

■Space saving in the height direction

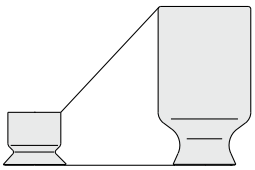

∗ The mounting adapter is available as a special order.

How to Order



Pad unit **ZP2 − 02 AU N**

∗ Pad unit's sales unit: 10 pcs.

Pad diameter

Symbol	Pad diameter	Blast type
02	ø2	—
03	ø3	—
04	ø4	—
06	ø6	—
B08	ø8	●

∗ Blast type: Workpieces can be removed easily.

Pad form

Symbol	Form
AU	Flat type

Pad material

Symbol	Material
N	NBR
S	Silicone rubber∗1
U	Urethane rubber
F	FKM
GN	Conductive NBR
GS	Conductive silicone rubber

∗1 Compliant with the FDA (USA Food and Drug Administration) regulation 21CFR§177.2600 for "Rubber articles intended for repeated use"

Dimensions: Pad Unit

ZP2-02AU□

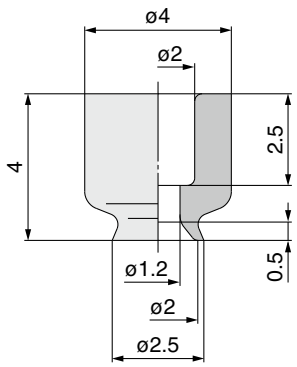

ZP2-03AU□

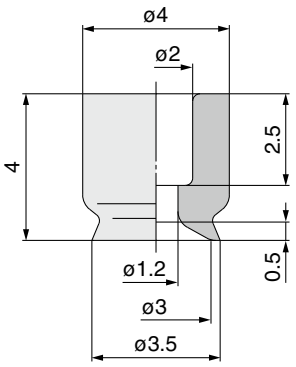

ZP2-04AU□

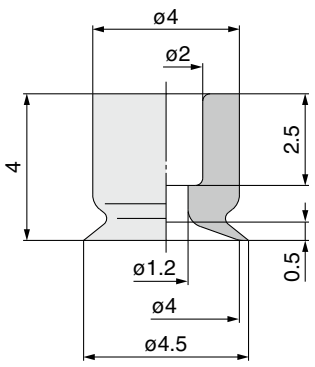

ZP2-06AU□

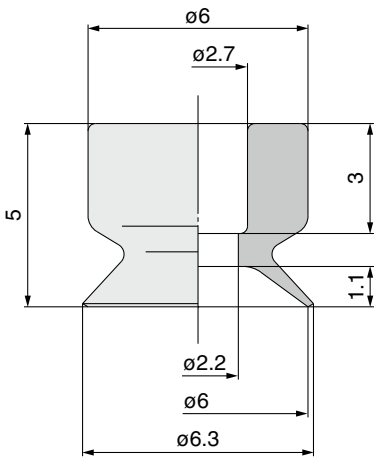

ZP2-B08AU□

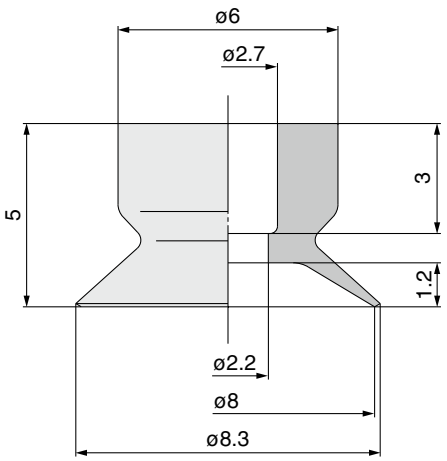

Thin Flat Pad

Pad diameter ø5, ø6, ø11, ø14, ø18, ø20

Symbol/Form

UT: Thin flat type (Skirt)

■**For the adsorption of soft workpieces such as thin sheets or vinyl**

Wrinkling or deformation during adsorption is reduced.

■**Applicable for the ZP series adapter**

Mounting Bracket Part Nos.

Adapter Assembly	p. 313

How to Order



Pad unit **ZP2 – 11 UT N**

∗ Pad unit's sales unit: 10 pcs.

Pad diameter

Symbol	Pad diameter
05	ø5
06	ø6
11	ø11
14	ø14
18	ø18
20	ø20

Pad form

Symbol	Form
UT	Thin flat type (Skirt)

Pad material

Symbol	Material
N	NBR
S	Silicone rubber∗1
U	Urethane rubber
F	FKM
GN	Conductive NBR
GS	Conductive silicone rubber

∗1 Compliant with the FDA (USA Food and Drug Administration) regulation 21CFR§177.2600 for "Rubber articles intended for repeated use"

Dimensions: Pad Unit

ZP2-05UT□

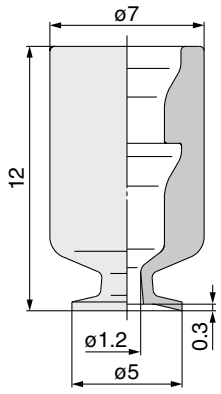

ZP2-06UT□

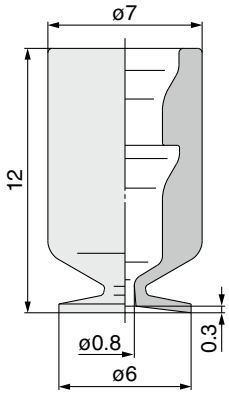

ZP2-11UT□

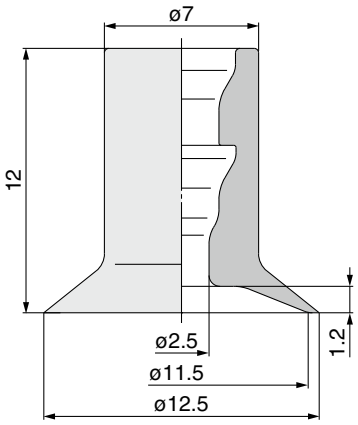

ZP2-14UT□

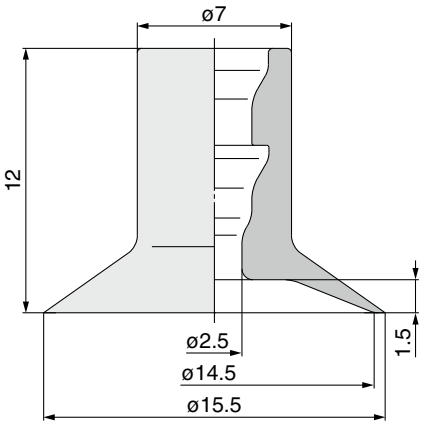

ZP2-18UT□

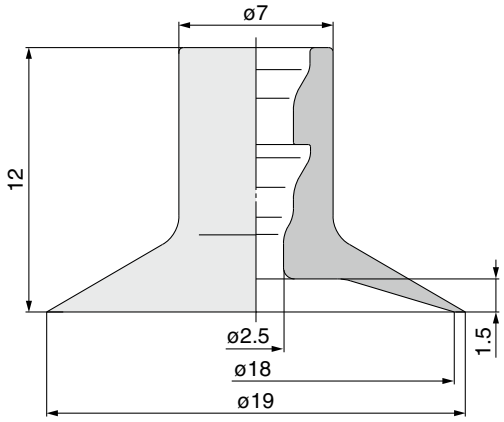

ZP2-20UT□

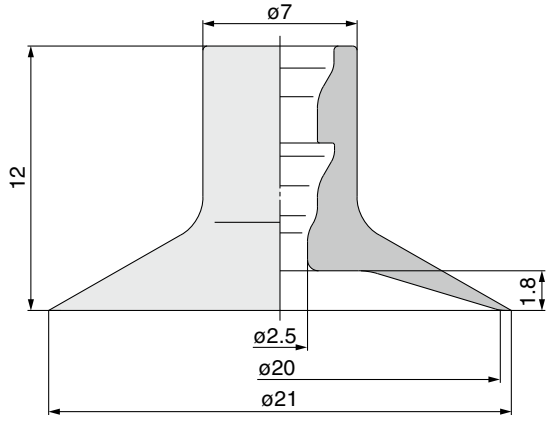

Adapter Mounting Dimensions

If an adapter will be made by the customer, design the adapter with the dimensions shown below.

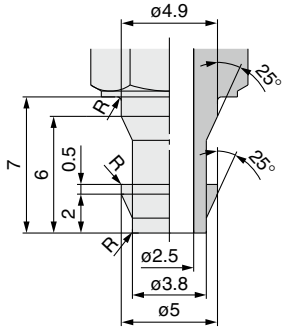

∗ The R part has to be smooth with no corners.

Compact/Thin Flat Pad *ZP Series*
Mounting Bracket Assembly

Adapter Assembly

Adapter part no. (With gasket)	ZPT1-A5/A6

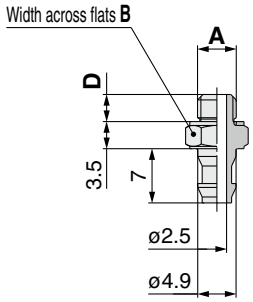

Applicable pad part no.	
ZP2-03U□	ZP2-05UT□
ZP2-B04U□	ZP2-06UT□
ZP2-B06C□	ZP2-11UT□
ZP2-07C□	ZP2-14UT□
ZP2-B08C□	ZP2-18UT□
ZP2-B06B□	ZP2-20UT□
ZP2-B08B□	

Dimensions

Part no.	A	B	D	Gasket part no. (Single unit)
ZPT1-A5	M5 x 0.8	7	3.5	M-5G2
ZPT1-A6	M6 x 1	8	4.5	M-6G

Adapter part no.	ZPT1-B4/B5

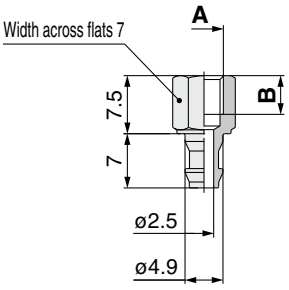

Applicable pad part no.	
ZP2-03U□	ZP2-05UT□
ZP2-B04U□	ZP2-06UT□
ZP2-B06C□	ZP2-11UT□
ZP2-07C□	ZP2-14UT□
ZP2-B08C□	ZP2-18UT□
ZP2-B06B□	ZP2-20UT□
ZP2-B08B□	

Dimensions

Part no.	A	B
ZPT1-B4	M4 x 0.7	4
ZPT1-B5	M5 x 0.8	5

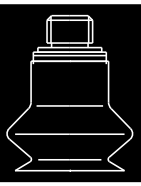

Bellows Pad

Pad diameter ø4, ø6, ø8, ø10, ø15, ø20

Symbol/Form

MB: Bellows type

■**For use where there is no space for a buffer (spring type)**

■**For the adsorption of workpieces with inclined surfaces**

How to Order



Pad unit **ZP2 − B04 MB N**

∗ Pad unit's sales unit: 10 pcs.

Pad diameter

Symbol	Pad diameter	Blast type
B04	ø4	●
B06	ø6	●
B08	ø8	●
B10	ø10	●
B15	ø15	●
B20	ø20	●

∗ Blast type: Workpieces can be removed easily.

Pad form

Symbol	Form
MB	Bellows type

Pad material

Symbol	Material
N	NBR
S	Silicone rubber∗1
U	Urethane rubber
F	FKM
GN	Conductive NBR
GS	Conductive silicone rubber

∗1 Compliant with the FDA (USA Food and Drug Administration) regulation 21CFR§177.2600 for "Rubber articles intended for repeated use"

Dimensions: Pad Unit

ZP2-B04MB□

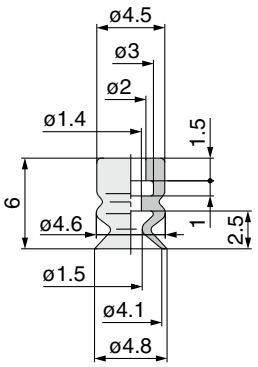

ZP2-B06MB□

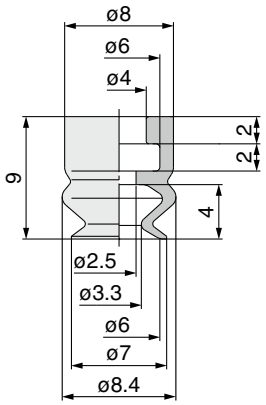

ZP2-B08MB□

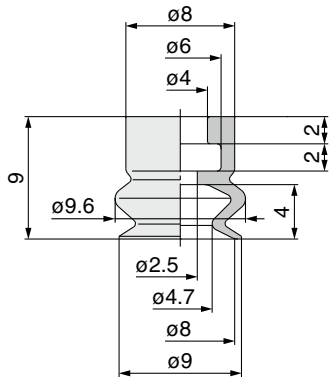

ZP2-B10MB□

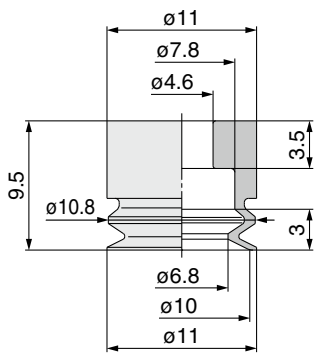

ZP2-B15MB□

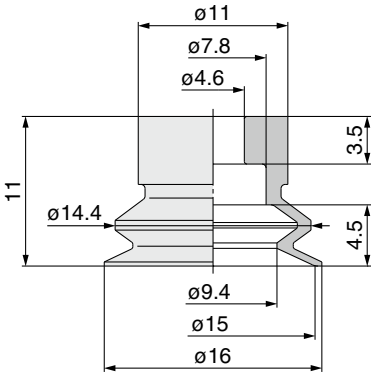

ZP2-B20MB□

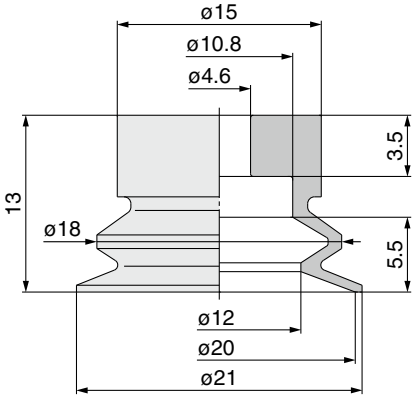

Adapter Mounting Dimensions

If an adapter will be made by the customer, design the adapter with the dimensions shown below.

Applicable pad B04MB

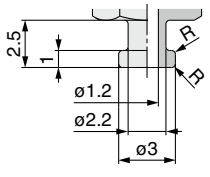

Applicable pad B06MB/B08MB

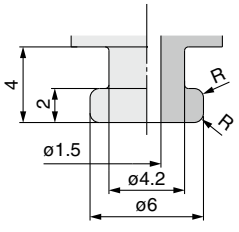

Applicable pad B10MB/B15MB

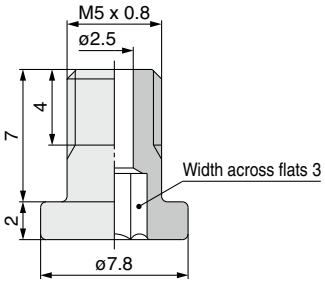

Applicable pad B20MB

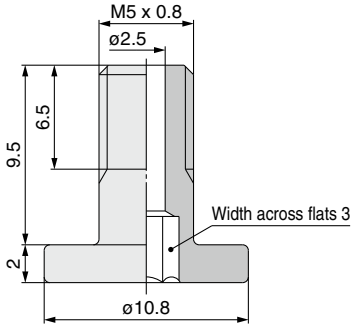

∗ The R part has to be smooth with no corners.

∗ Refer to page 315 for adapter applicable to the ZP2 series.



How to Order

With adapter **ZP2 – T B04 MB N – A3**

Vacuum inlet direction

Symbol	Direction
T	Vertical

Pad diameter

Symbol	Pad diameter	Blast type
B04	ø4	●
B06	ø6	●
B08	ø8	●
B10	ø10	●
B15	ø15	●
B20	ø20	●

∗ Blast type: Workpieces can be removed easily.

Mounting

Thread size (Symbol) \ Pad diameter (Symbol)	B04	B06	B08	B10	B15	B20
A3 (M3 x 0.5 Male thread)	●	—	—	—	—	—
H5 (M5 x 0.8 Male thread)	—	●	●	●	●	●
B5 (M5 x 0.8 Female thread)	—	●	●	—	—	—

Pad material

Symbol	Material
N	NBR
S	Silicone rubber∗1
U	Urethane rubber
F	FKM
GN	Conductive NBR
GS	Conductive silicone rubber

∗1 Compliant with the FDA (USA Food and Drug Administration) regulation 21CFR§177.2600 for "Rubber articles intended for repeated use"

Pad form

Symbol	Form
MB	Bellows type

Replacement Part Nos.

Model	Pad unit part no.∗1	Adapter part no.	Gasket part no. (Single unit)
ZP2-TB04MB□-A3	ZP2-B04MB□	ZP2A-M01P∗2	M-3G2
ZP2-TB06MB□-H5	ZP2-B06MB□	ZP2A-M02P∗2	M-5G2
ZP2-TB08MB□-H5	ZP2-B08MB□		
ZP2-TB10MB□-H5	ZP2-B10MB□	ZP2A-M05	—
ZP2-TB15MB□-H5	ZP2-B15MB□		
ZP2-TB20MB□-H5	ZP2-B20MB□	ZP2A-M06	
ZP2-TB06MB□-B5	ZP2-B06MB□	ZP2A-M04	
ZP2-TB08MB□-B5	ZP2-B08MB□		

∗1 Pad unit's sales unit: 10 pcs.
∗2 With gasket
∗ □ in the table indicates the pad material
∗ The pad is shipped together but does not come assembled.

Dimensions: With Adapter

ZP2-TB04MB□□-A3

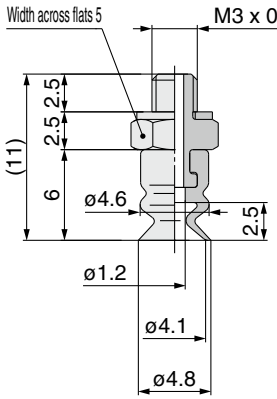

ZP2-TB06MB□-H5

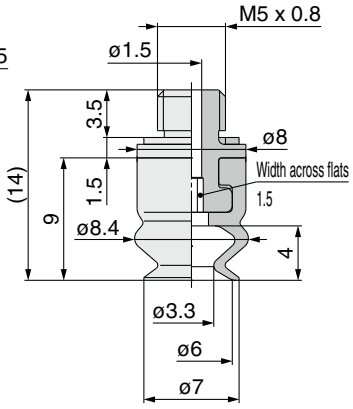

ZP2-TB08MB□-H5

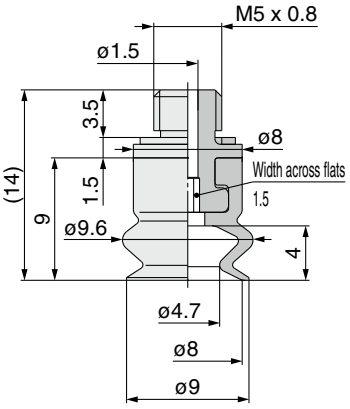

ZP2-TB10MB□-H5

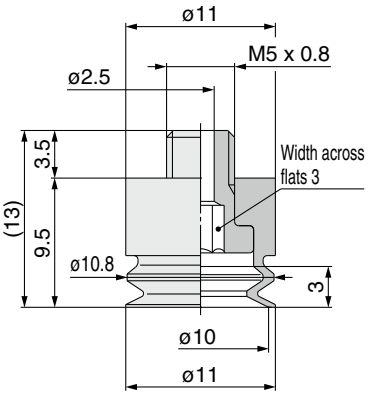

ZP2-TB15MB□-H5

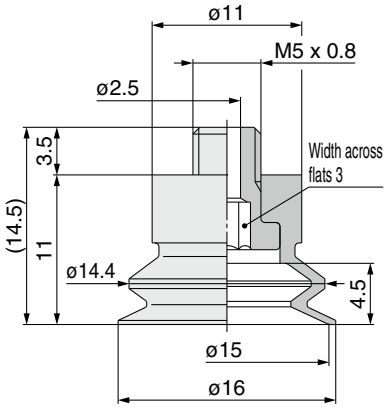

ZP2-TB20MB□-H5

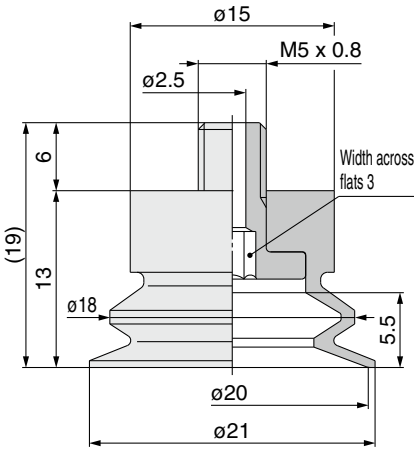

ZP2-TB06MB□-B5

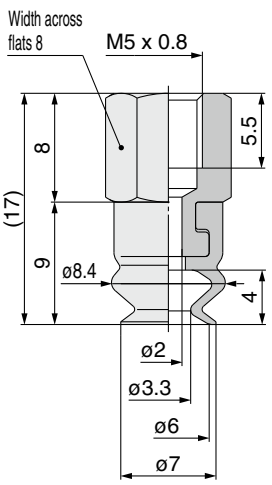

ZP2-TB08MB□-B5

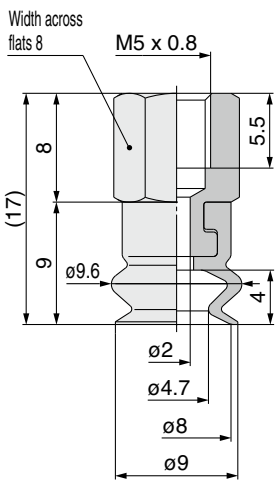

Bellows Pad

Pad diameter ø2, ø4, ø5, ø6

Symbol/Form

ZJ: Bellows type

■**For use where there is no space for a buffer (spring type)**

■**For the adsorption of work-pieces with inclined surfaces**



How to Order

Pad unit **ZP2 – 02 ZJ N**

∗ Pad unit's sales unit: 10 pcs.

Pad diameter

Symbol	Pad diameter
02	ø2
04	ø4
05	ø5
06	ø6

Pad material

Symbol	Material
N	NBR
S	Silicone rubber∗1
U	Urethane rubber
F	FKM
GN	Conductive NBR
GS	Conductive silicone rubber

∗1 Compliant with the FDA (USA Food and Drug Administration) regulation 21CFR§177.2600 for "Rubber articles intended for repeated use"

Pad form

Symbol	Form
ZJ	Bellows type

∗ The mounting adapter is available as a special order.

Dimensions: Pad Unit

ZP2-02ZJ□ [0.1 g]

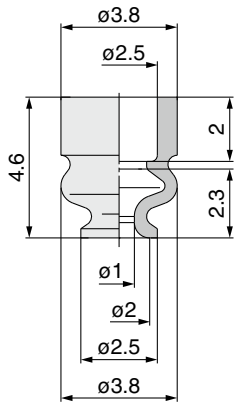

ZP2-04ZJ□ [0.1 g]

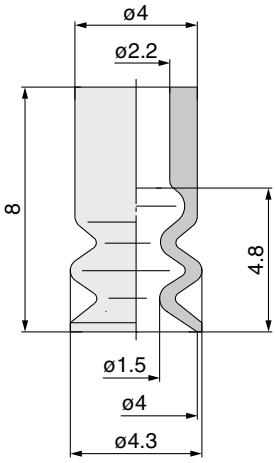

ZP2-05ZJ□ [0.2 g]

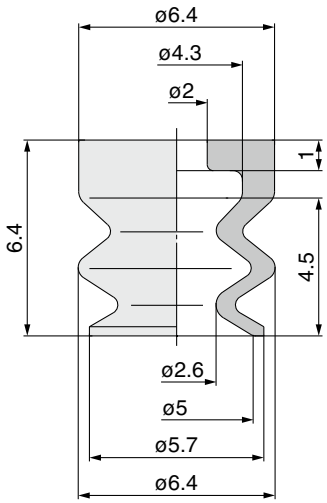

ZP2-06ZJ□ [0.3 g]

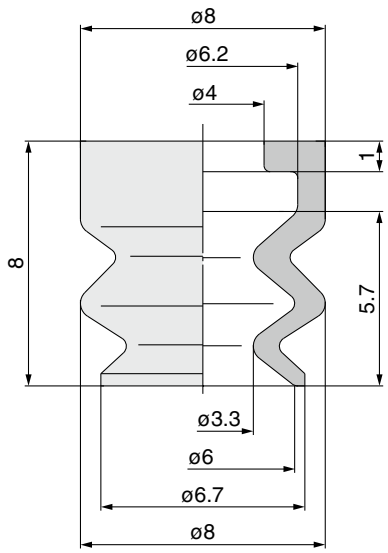

High Rigidity Pad

Pad diameter ø32, ø150, ø250, ø300, ø340

Symbol/Form
H: High rigidity
(Flat type with ribs)
HT: High rigidity
(Thin flat type with ribs)

■Reinforced pad to prevent deformation when transferring heavy or large workpieces



How to Order

Pad unit **ZP2 − 32 H N**

Pad diameter

Symbol	Pad diameter
32	ø32
150	ø150
250	ø250
300	ø300
340	ø340

Pad material

Symbol	Material
N	NBR
S	Silicone rubber*1
F	FKM
C	CR

*1 Silicone rubber is only applicable to the ø32 pad. Compliant with the FDA (USA Food and Drug Administration) regulation 21CFR§177.2600 for "Rubber articles intended for repeated use"

Pad form—Pad diameter

Pad form \ Pad diameter (Symbol)	32	150	250	300	340
H (Flat type with ribs)	●	—	—	●	●
HT (Thin flat type with ribs)	—	●	●	—	—

* The mounting adapter is available as a special order.

Dimensions: Pad Unit

ZP2-32H□

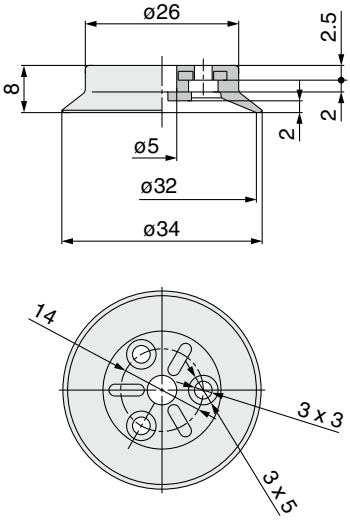

ZP2-300H□

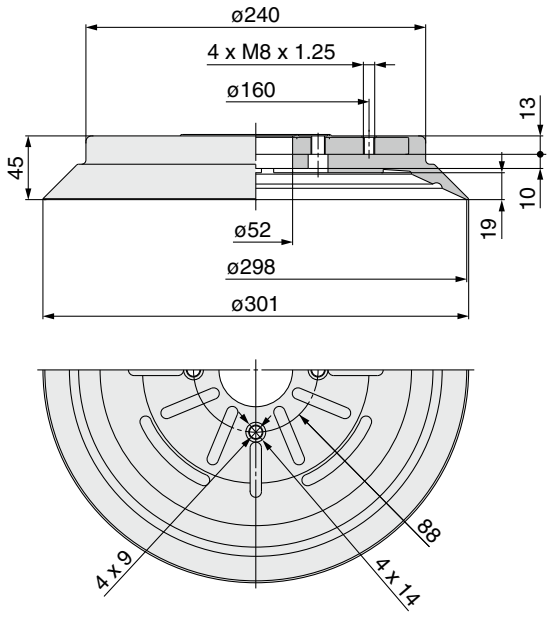

ZP2-340H□

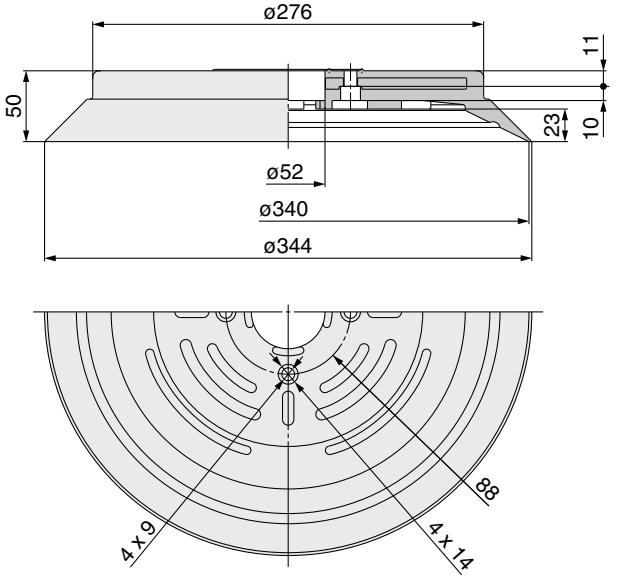

SMC

Dimensions

ZP2-150HT□

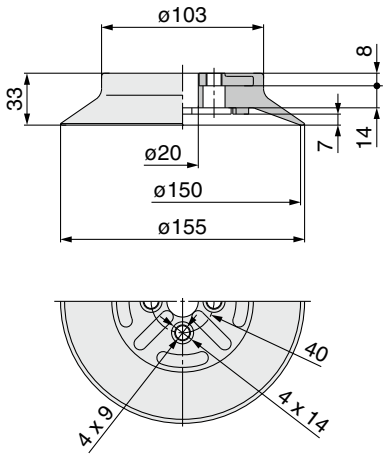

ZP2-250HT□

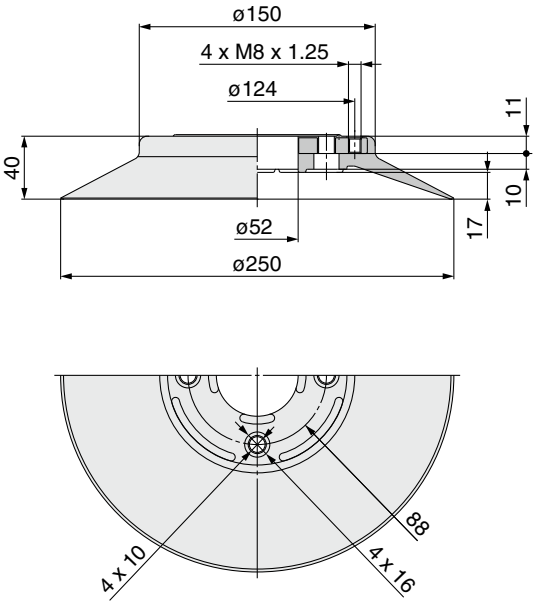

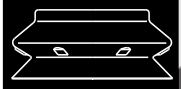

High Rigidity Pad

Pad diameter ø32, ø150

Symbol/Form

HB: High rigidity (Bellows type)

■For heavy or large workpieces



How to Order

Pad unit **ZP2 − 32 HB N**

Pad diameter

Symbol	Pad diameter
32	ø32
150	ø150

Pad material

Symbol	Material
N	NBR
S	Silicone rubber*1
F	FKM
C	CR

*1 Silicone rubber is only applicable to the ø32 pad. Compliant with the FDA (USA Food and Drug Administration) regulation 21CFR§177.2600 for "Rubber articles intended for repeated use"

Pad form

Symbol	Form
HB	High rigidity (Bellows type)

* The mounting adapter is available as a special order.

Dimensions: Pad Unit

ZP2-32HB□

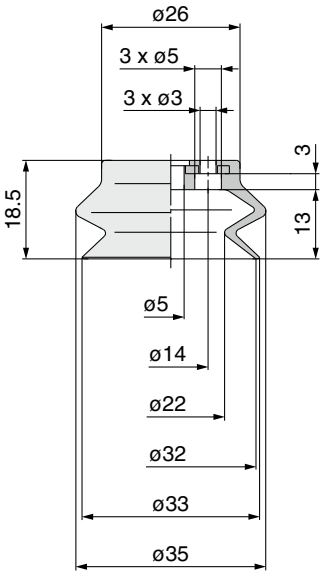

ZP2-150HB□

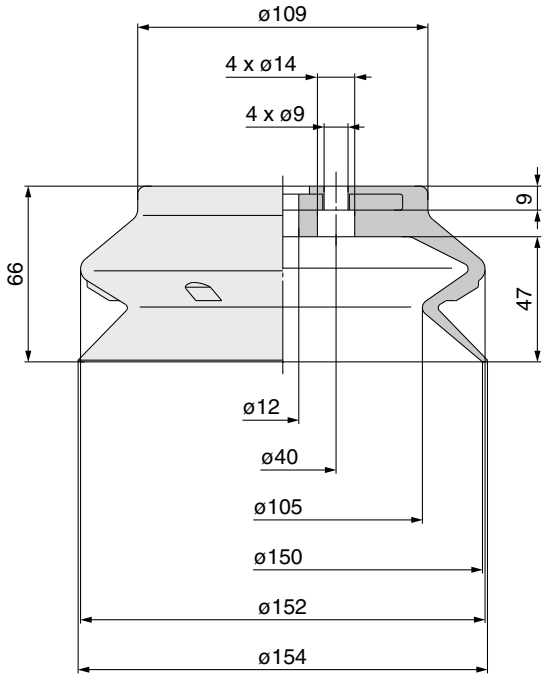

High Rigidity Pad

Pad size 30 x 50

Symbol/Form

HW: High rigidity (Oval type)

■For heavy or large workpieces

How to Order



Pad unit **ZP2 − 3050 HW N**

Pad size

Symbol	Pad size
3050	30 x 50

Pad material

Symbol	Material
N	NBR
S	Silicone rubber*1
F	FKM
C	CR

*1 Compliant with the FDA (USA Food and Drug Administration) regulation 21CFR§177.2600 for "Rubber articles intended for repeated use"

Pad form

Symbol	Form
HW	High rigidity (Oval type)

* For details on mounting brackets, refer to the special applications section of the pad on pages 255 to 263.

Dimensions: Pad Unit

ZP2-3050HW□

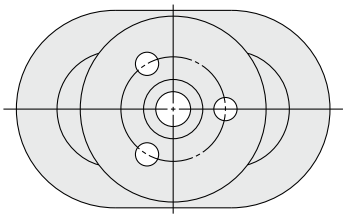

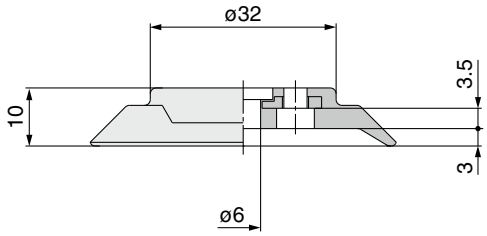

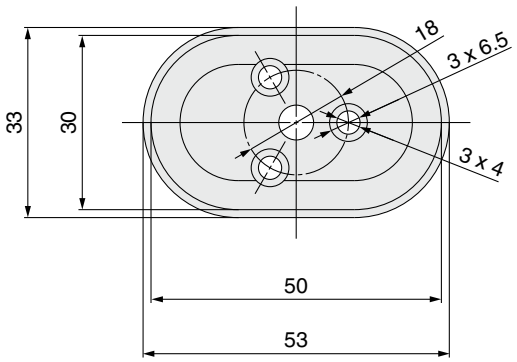

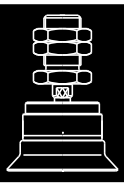

High Rigidity Ball Joint Pad

Pad diameter ø40, ø50, ø63, ø80, ø100, ø125

Symbol/Form

H: High rigidity (Flat type with ribs)

■ For the adsorption of workpieces with inclined surfaces

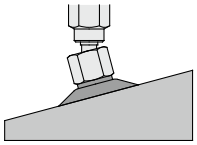

Replacement Part Nos.

Model	Pad unit part no.	Adapter assembly part no.	
ZP2-TF40H□	ZP40H□	ZP2A-TF1	With three M3 bolts
ZP2-TF50H□	ZP50H□		
ZP2-TF63H□	ZP63H□	ZP2A-TF2	With four M4 bolts
ZP2-TF80H□	ZP80H□		
ZP2-TF100H□	ZP100H□	ZP2A-TF3	With four M5 bolts
ZP2-TF125H□	ZP125H□		

∗ □ in the table indicates the pad material

How to Order

With adapter **ZP2 − T F 40 H N**



Vacuum inlet direction Vertical

Vacuum inlet direction

Symbol	Direction
T	Vertical

Specification (mechanism)

Symbol	Specification
F	Ball joint

Pad diameter

Symbol	Pad diameter
40	ø40
50	ø50
63	ø63
80	ø80
100	ø100
125	ø125

Pad form

Symbol	Form
H	High rigidity (Flat type with ribs)

Pad material (□)

Symbol	Material
N	NBR
S	Silicone rubber∗1
U	Urethane rubber
F	FKM
E	EPR

∗1 Compliant with the FDA (USA Food and Drug Administration) regulation 21CFR§177.2600 for "Rubber articles intended for repeated use"

Dimensions: With Adapter

ZP2-TF$^{40}_{50}$H□

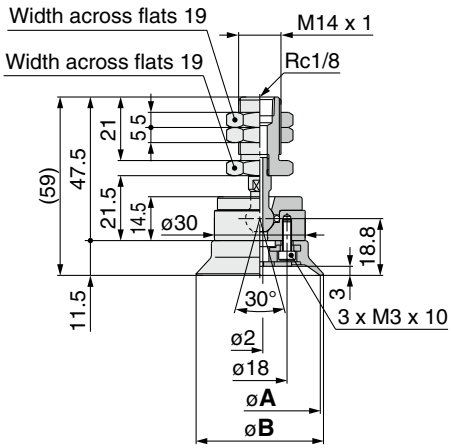

Dimensions

Model	A	B
ZP2-TF40H□	40	42.1
ZP2-TF50H□	50	52.1

ZP2-TF$^{63}_{80}$H□

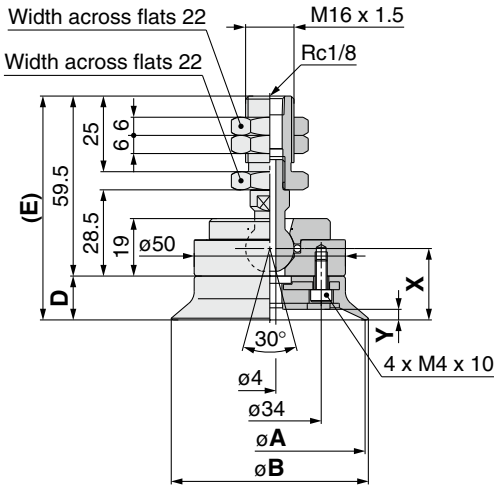

Dimensions

Model	A	B	D	E	X	Y
ZP2-TF63H□	63	65.2	14.5	74	23.6	3.5
ZP2-TF80H□	80	82.1	16.5	76	25.6	4.5

ZP2-TF$^{100}_{125}$H□

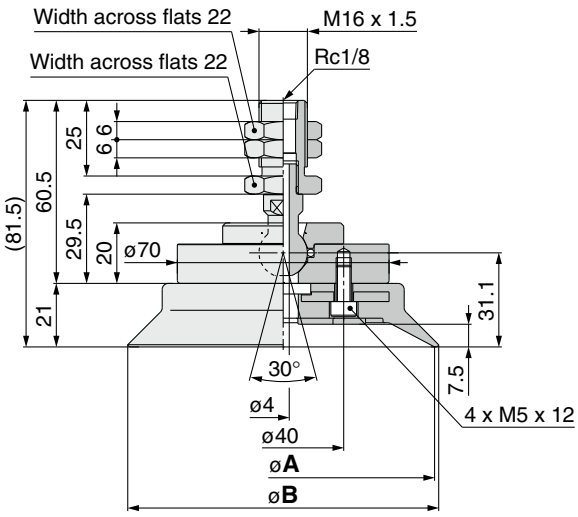

Dimensions

Model	A	B
ZP2-TF100H□	100	102.8
ZP2-TF125H□	125	127.7

How to Order

With adapter **ZP2 − X F 40 H N**

Vacuum inlet direction

Symbol	Direction
X	Lateral

Specification (mechanism)

Symbol	Specification
F	Ball joint

Pad diameter

Symbol	Pad diameter
40	ø40
50	ø50
63	ø63
80	ø80
100	ø100
125	ø125

Pad form

Symbol	Form
H	High rigidity (Flat type with ribs)

Pad material (□)

Symbol	Material
N	NBR
S	Silicone rubber*1
U	Urethane rubber
F	FKM
E	EPR

*1 Compliant with the FDA (USA Food and Drug Administration) regulation 21CFR§177.2600 for "Rubber articles intended for repeated use"



Vacuum inlet direction Lateral

Replacement Part Nos.

Model	Pad unit part no.	Adapter assembly part no.	
ZP2-XF40H□	ZP40H□	ZP2A-XF1	With three M3 bolts
ZP2-XF50H□	ZP50H□		
ZP2-XF63H□	ZP63H□	ZP2A-XF2	With four M4 bolts
ZP2-XF80H□	ZP80H□		
ZP2-XF100H□	ZP100H□	ZP2A-XF3	With four M5 bolts
ZP2-XF125H□	ZP125H□		

∗ □ in the table indicates the pad material

Dimensions: With Adapter

ZP2-XF$^{40}_{50}$H□

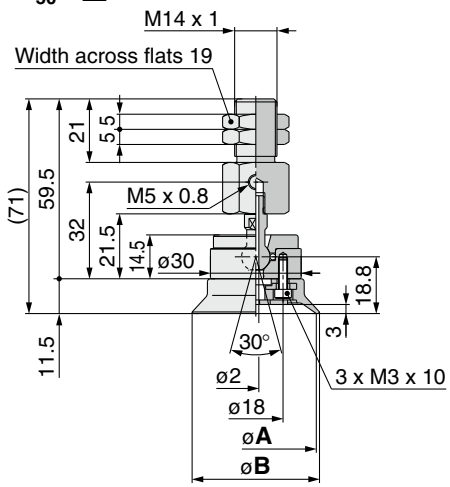

Dimensions

Model	A	B
ZP2-XF40H□	40	42.1
ZP2-XF50H□	50	52.1

ZP2-XF$^{63}_{80}$H□

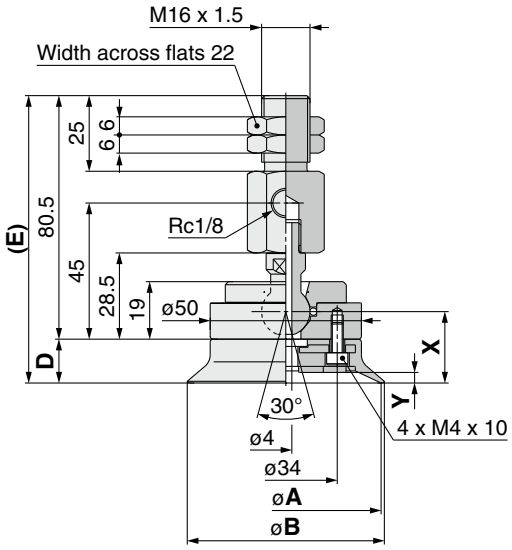

Dimensions

Model	A	B	D	E	X	Y
ZP2-XF63H□	63	65.2	14.5	95	23.6	3.5
ZP2-XF80H□	80	82.1	16.5	97	25.6	4.5

ZP2-XF$^{100}_{125}$H□

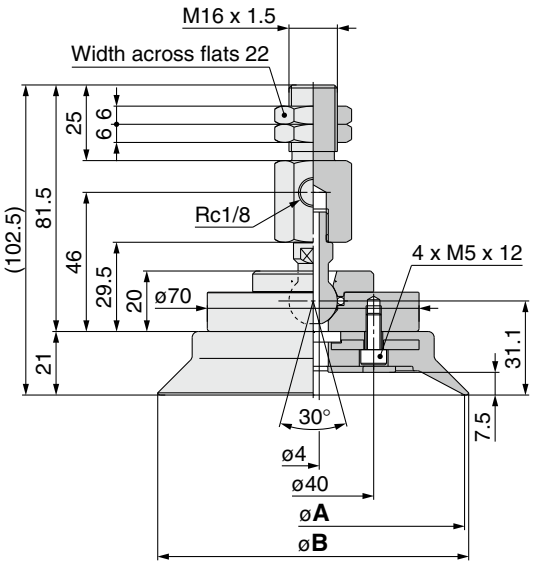

Dimensions

Model	A	B
ZP2-XF100H□	100	102.8
ZP2-XF125H□	125	127.7

How to Order

With buffer **ZP2 − T F 40 H N JB 25**

Vacuum inlet direction

Symbol	Direction
T	Vertical

Specification (mechanism)

Symbol	Specification
F	Ball joint

Pad diameter

Symbol	Pad diameter
40	ø40
50	ø50
63	ø63
80	ø80
100	ø100
125	ø125

Pad form

Symbol	Form
H	High rigidity (Flat type with ribs)

Pad material (□)

Symbol	Material
N	NBR
S	Silicone rubber*1
U	Urethane rubber
F	FKM
E	EPR

Buffer specification

Symbol	Specification
JB	Rotating With bushing Material: Brass
JF	Rotating With bushing Material: Structural steel

Buffer stroke (■)

Stroke \ Pad diameter	ø40 ø50	ø63 ø80	ø100 ø125
25	●	●	●
50	●	●	●
75	●	●	●
100	—	●	●



Vacuum inlet direction Vertical

*1 Compliant with the FDA (USA Food and Drug Administration) regulation 21CFR§177.2600 for "Rubber articles intended for repeated use"

Replacement Part Nos.

Model	Pad unit part no.	Buffer assembly part no.	
ZP2-TF40H□(JB/JF)25	ZP40H□	ZP2B-TF1(JB/JF)25	With three M3 bolts
ZP2-TF40H□(JB/JF)50		ZP2B-TF1(JB/JF)50	
ZP2-TF40H□(JB/JF)75		ZP2B-TF1(JB/JF)75	
ZP2-TF50H□(JB/JF)25	ZP50H□	ZP2B-TF1(JB/JF)25	
ZP2-TF50H□(JB/JF)50		ZP2B-TF1(JB/JF)50	
ZP2-TF50H□(JB/JF)75		ZP2B-TF1(JB/JF)75	
ZP2-TF63H□(JB/JF)25	ZP63H□	ZP2B-TF2(JB/JF)25	With four M4 bolts
ZP2-TF63H□(JB/JF)50		ZP2B-TF2(JB/JF)50	
ZP2-TF63H□(JB/JF)75		ZP2B-TF2(JB/JF)75	
ZP2-TF63H□(JB/JF)100		ZP2B-TF2(JB/JF)100	
ZP2-TF80H□(JB/JF)25	ZP80H□	ZP2B-TF2(JB/JF)25	
ZP2-TF80H□(JB/JF)50		ZP2B-TF2(JB/JF)50	
ZP2-TF80H□(JB/JF)75		ZP2B-TF2(JB/JF)75	
ZP2-TF80H□(JB/JF)100		ZP2B-TF2(JB/JF)100	
ZP2-TF100H□(JB/JF)25	ZP100H□	ZP2B-TF3(JB/JF)25	With four M5 bolts
ZP2-TF100H□(JB/JF)50		ZP2B-TF3(JB/JF)50	
ZP2-TF100H□(JB/JF)75		ZP2B-TF3(JB/JF)75	
ZP2-TF100H□(JB/JF)100		ZP2B-TF3(JB/JF)100	
ZP2-TF125H□(JB/JF)25	ZP125H□	ZP2B-TF3(JB/JF)25	
ZP2-TF125H□(JB/JF)50		ZP2B-TF3(JB/JF)50	
ZP2-TF125H□(JB/JF)75		ZP2B-TF3(JB/JF)75	
ZP2-TF125H□(JB/JF)100		ZP2B-TF3(JB/JF)100	

* □ in the table indicates the pad material

Buffer Specifications

Pad diameter		ø40, ø50	ø63, ø80, ø100, ø125
Stroke [mm]		25, 50, 75	25, 50, 75, 100
Spring reactive force [N]	**At 0 stroke**	6.9	10
	At full stroke	11.8	15
Buffer specifications	**JB**	Rotating With bushing Buffer body material: Brass	
		Nut tightening torque: 28 to 32 N·m	Nut tightening torque: 45 to 50 N·m
	JF	Rotating With bushing Buffer body material: Structural steel	
		Nut tightening torque: 48 to 52 N·m	Nut tightening torque: 75 to 80 N·m

Dimensions: With Buffer

ZP2-TF$^{40}_{50}$H□$^{JB}_{JF}$■

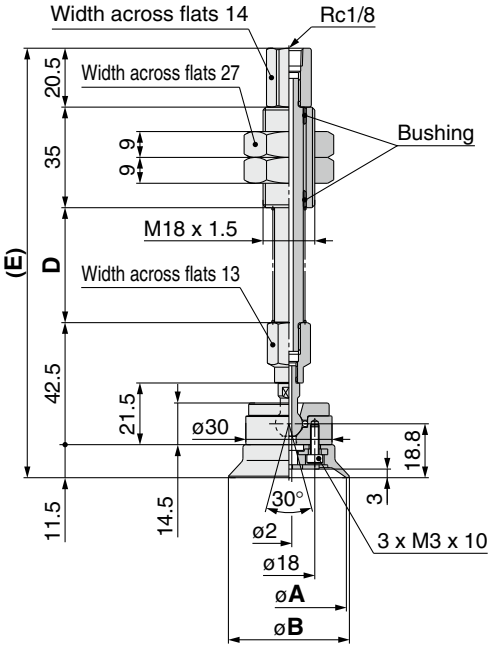

Dimensions

Model	A	B	D	E
ZP2-TF40H□(JB/JF)25	40	42.1	40	149.5
ZP2-TF40H□(JB/JF)50			75	184.5
ZP2-TF40H□(JB/JF)75			111	220.5
ZP2-TF50H□(JB/JF)25	50	52.1	40	149.5
ZP2-TF50H□(JB/JF)50			75	184.5
ZP2-TF50H□(JB/JF)75			111	220.5

ZP2-TF$^{63}_{80}$H□$^{JB}_{JF}$■

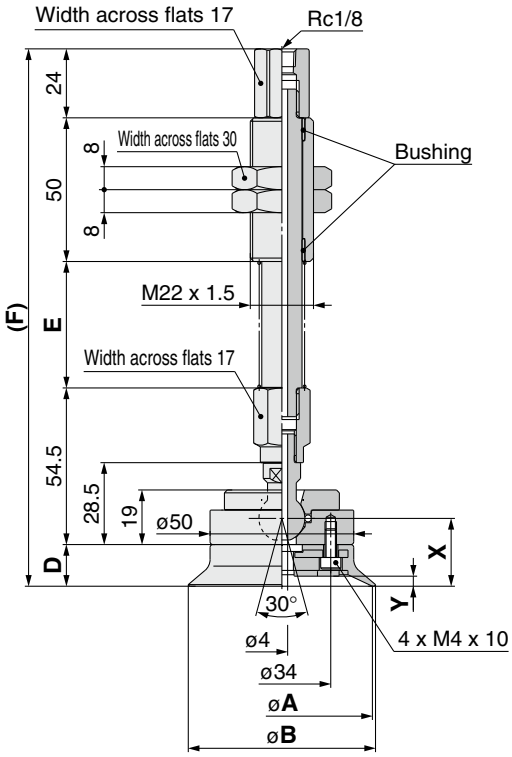

Dimensions

Model	A	B	D	E	F	X	Y
ZP2-TF63H□(JB/JF)25	63	65.2	14.5	44	187	23.6	3.5
ZP2-TF63H□(JB/JF)50				80	223		
ZP2-TF63H□(JB/JF)75				120	263		
ZP2-TF63H□(JB/JF)100				155	298		
ZP2-TF80H□(JB/JF)25	80	82.1	16.5	44	189	25.6	4.5
ZP2-TF80H□(JB/JF)50				80	225		
ZP2-TF80H□(JB/JF)75				120	265		
ZP2-TF80H□(JB/JF)100				155	300		

ZP2-TF$^{100}_{125}$H□$^{JB}_{JF}$■

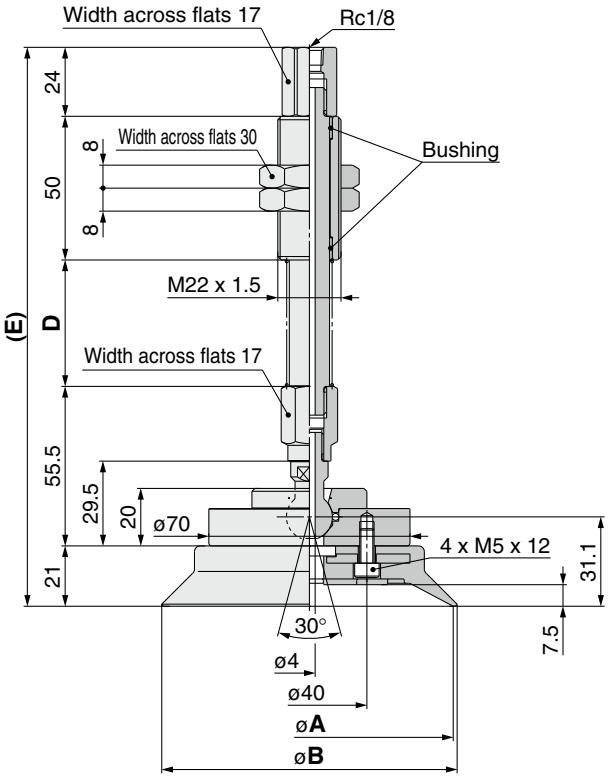

Dimensions

Model	A	B	D	E
ZP2-TF100H□(JB/JF)25	100	102.8	44	194.5
ZP2-TF100H□(JB/JF)50			80	230.5
ZP2-TF100H□(JB/JF)75			120	270.5
ZP2-TF100H□(JB/JF)100			155	305.5
ZP2-TF125H□(JB/JF)25	125	127.7	44	194.5
ZP2-TF125H□(JB/JF)50			80	230.5
ZP2-TF125H□(JB/JF)75			120	270.5
ZP2-TF125H□(JB/JF)100			155	305.5

How to Order

With buffer **ZP2 − X F 40 H N JB 25**

Vacuum inlet direction

Symbol	Direction
X	Lateral

Specification (mechanism)

Symbol	Specification
F	Ball joint

Pad diameter

Symbol	Pad diameter
40	ø40
50	ø50
63	ø63
80	ø80
100	ø100
125	ø125

Pad form

Symbol	Form
H	High rigidity (Flat type with ribs)

Pad material (□)

Symbol	Material
N	NBR
S	Silicone rubber*1
U	Urethane rubber
F	FKM
E	EPR

Buffer specification

Symbol	Specification
JB	Rotating With bushing Material: Brass
JF	Rotating With bushing Material: Structural steel

Buffer stroke (■)

Stroke \ Pad diameter	ø40 ø50	ø63 ø80	ø100 ø125
25	●	●	●
50	●	●	●
75	●	●	●
100	—	●	●



Vacuum inlet direction **Lateral**

*1 Compliant with the FDA (USA Food and Drug Administration) regulation 21CFR§177.2600 for "Rubber articles intended for repeated use"

Replacement Part Nos.

Model	Pad unit part no.	Buffer assembly part no.	
ZP2-XF40H□(JB/JF)25	ZP40H□	ZP2B-XF1(JB/JF)25	With three M3 bolts
ZP2-XF40H□(JB/JF)50		ZP2B-XF1(JB/JF)50	
ZP2-XF40H□(JB/JF)75		ZP2B-XF1(JB/JF)75	
ZP2-XF50H□(JB/JF)25	ZP50H□	ZP2B-XF1(JB/JF)25	
ZP2-XF50H□(JB/JF)50		ZP2B-XF1(JB/JF)50	
ZP2-XF50H□(JB/JF)75		ZP2B-XF1(JB/JF)75	
ZP2-XF63H□(JB/JF)25	ZP63H□	ZP2B-XF2(JB/JF)25	With four M4 bolts
ZP2-XF63H□(JB/JF)50		ZP2B-XF2(JB/JF)50	
ZP2-XF63H□(JB/JF)75		ZP2B-XF2(JB/JF)75	
ZP2-XF63H□(JB/JF)100		ZP2B-XF2(JB/JF)100	
ZP2-XF80H□(JB/JF)25	ZP80H□	ZP2B-XF2(JB/JF)25	
ZP2-XF80H□(JB/JF)50		ZP2B-XF2(JB/JF)50	
ZP2-XF80H□(JB/JF)75		ZP2B-XF2(JB/JF)75	
ZP2-XF80H□(JB/JF)100		ZP2B-XF2(JB/JF)100	
ZP2-XF100H□(JB/JF)25	ZP100H□	ZP2B-XF3(JB/JF)25	With four M5 bolts
ZP2-XF100H□(JB/JF)50		ZP2B-XF3(JB/JF)50	
ZP2-XF100H□(JB/JF)75		ZP2B-XF3(JB/JF)75	
ZP2-XF100H□(JB/JF)100		ZP2B-XF3(JB/JF)100	
ZP2-XF125H□(JB/JF)25	ZP125H□	ZP2B-XF3(JB/JF)25	
ZP2-XF125H□(JB/JF)50		ZP2B-XF3(JB/JF)50	
ZP2-XF125H□(JB/JF)75		ZP2B-XF3(JB/JF)75	
ZP2-XF125H□(JB/JF)100		ZP2B-XF3(JB/JF)100	

* □ in the table indicates the pad material

Buffer Specifications

Pad diameter		ø40, ø50	ø63, ø80, ø100, ø125
Stroke [mm]		25, 50, 75	25, 50, 75, 100
Spring reactive force [N]	**At 0 stroke**	6.9	10
	At full stroke	11.8	15
Buffer specifications	**JB**	Rotating With bushing Buffer body material: Brass	
		Nut tightening torque: 28 to 32 N·m	Nut tightening torque: 45 to 50 N·m
	JF	Rotating With bushing Buffer body material: Structural steel	
		Nut tightening torque: 48 to 52 N·m	Nut tightening torque: 75 to 80 N·m

Dimensions: With Buffer

ZP2-XF$^{40}_{50}$H□$^{JB}_{JF}$■

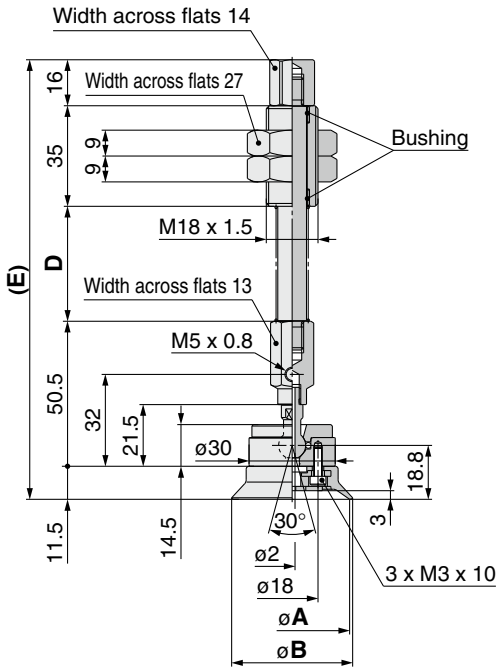

Dimensions

Model	A	B	D	E
ZP2-XF40H□(JB/JF)25	40	42.1	40	153
ZP2-XF40H□(JB/JF)50			75	188
ZP2-XF40H□(JB/JF)75			111	224
ZP2-XF50H□(JB/JF)25	50	52.1	40	153
ZP2-XF50H□(JB/JF)50			75	188
ZP2-XF50H□(JB/JF)75			111	224

ZP2-XF$^{63}_{80}$H□$^{JB}_{JF}$■

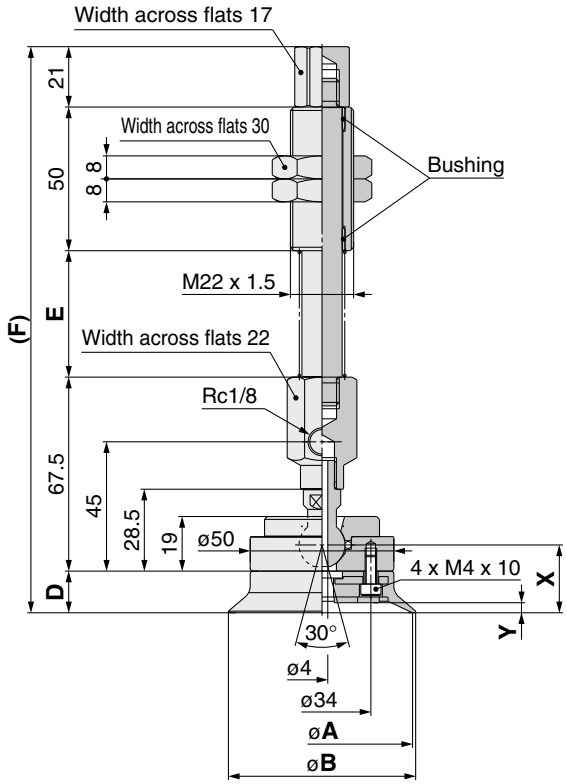

Dimensions

Model	A	B	D	E	F	X	Y
ZP2-XF63H□(JB/JF)25	63	65.2	14.5	44	197	23.6	3.5
ZP2-XF63H□(JB/JF)50				80	233		
ZP2-XF63H□(JB/JF)75				120	273		
ZP2-XF63H□(JB/JF)100				155	308		
ZP2-XF80H□(JB/JF)25	80	82.1	16.5	44	199	25.6	4.5
ZP2-XF80H□(JB/JF)50				80	235		
ZP2-XF80H□(JB/JF)75				120	275		
ZP2-XF80H□(JB/JF)100				155	310		

ZP2-XF$^{100}_{125}$H□$^{JB}_{JF}$■

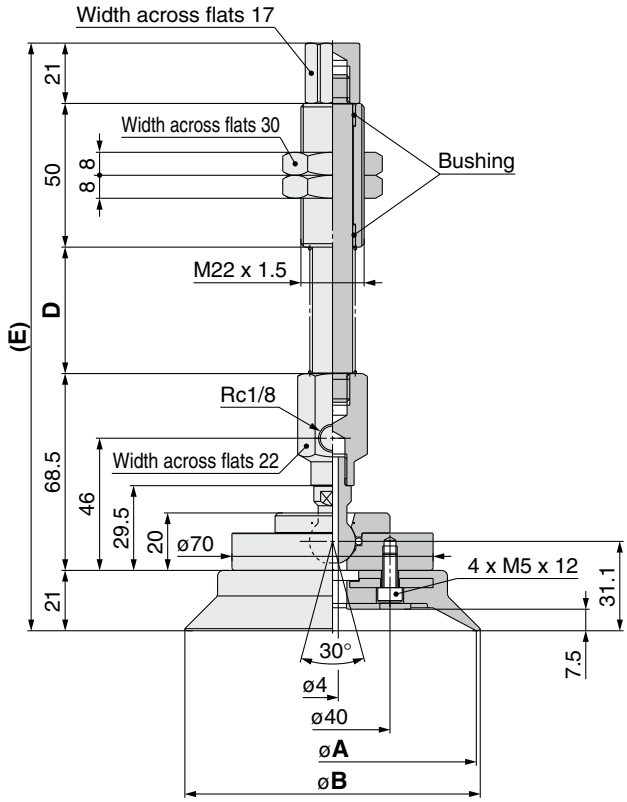

Dimensions

Model	A	B	D	E
ZP2-XF100H□(JB/JF)25	100	102.8	44	204.5
ZP2-XF100H□(JB/JF)50			80	240.5
ZP2-XF100H□(JB/JF)75			120	280.5
ZP2-XF100H□(JB/JF)100			155	315.5
ZP2-XF125H□(JB/JF)25	125	127.7	44	204.5
ZP2-XF125H□(JB/JF)50			80	240.5
ZP2-XF125H□(JB/JF)75			120	280.5
ZP2-XF125H□(JB/JF)100			155	315.5

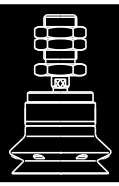

High Rigidity Ball Joint Pad

Pad diameter ø40, ø50, ø63, ø80, ø100, ø125

Symbol/Form

HB: High rigidity (Bellows type)

■For the adsorption of workpieces with inclined or curved surfaces

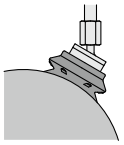

Replacement Part Nos.

Model	Pad unit part no.	Adapter assembly part no.	
ZP2-TF40HB□	ZP40HB□	ZP2A-TF1	With three M3 bolts
ZP2-TF50HB□	ZP50HB□		
ZP2-TF63HB□	ZP63HB□	ZP2A-TF2	With four M4 bolts
ZP2-TF80HB□	ZP80HB□		
ZP2-TF100HB□	ZP100HB□	ZP2A-TF3	With four M5 bolts
ZP2-TF125HB□	ZP125HB□		

∗ □ in the table indicates the pad material

How to Order

With adapter **ZP2 − T F 40 HB N**



Vacuum inlet direction

Symbol	Direction
T	Vertical

Specification (mechanism)

Symbol	Specification
F	Ball joint

Pad diameter

Symbol	Pad diameter
40	ø40
50	ø50
63	ø63
80	ø80
100	ø100
125	ø125

Pad form

Symbol	Form
HB	High rigidity (Bellows type)

Vacuum inlet direction **Vertical**

Pad material (□)

Symbol	Material
N	NBR
S	Silicone rubber∗1
U	Urethane rubber
F	FKM
E	EPR

∗1 Compliant with the FDA (USA Food and Drug Administration) regulation 21CFR§177.2600 for "Rubber articles intended for repeated use"

Dimensions: With Adapter

ZP2-TF$^{40}_{50}$HB□

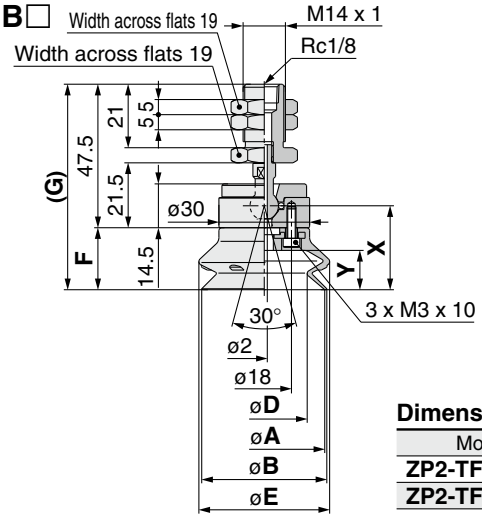

Dimensions

Model	A	B	D	E	F	G	X	Y
ZP2-TF40HB□	40	41.4	28.3	42.3	20.5	68	27.8	13
ZP2-TF50HB□	50	52	36.2	52.7	24	71.5	31.3	16.5

ZP2-TF$^{63}_{80}$HB□

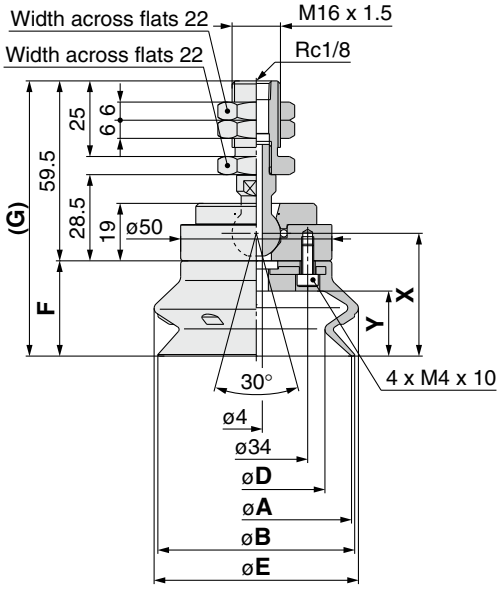

Dimensions

Model	A	B	D	E	F	G	X	Y
ZP2-TF63HB□	63	65.1	46	66.4	31.5	91	40.6	21.5
ZP2-TF80HB□	80	82.8	60.1	83.8	37	96.5	46.1	27.5

ZP2-TF$^{100}_{125}$HB□

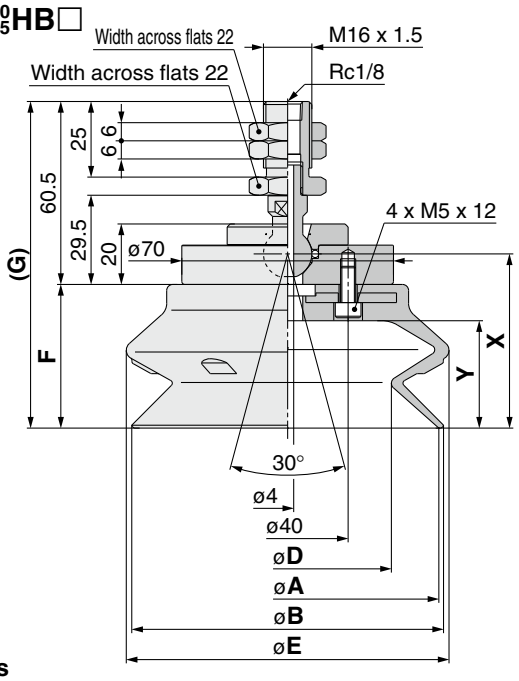

Dimensions

Model	A	B	D	E	F	G	X	Y
ZP2-TF100HB□	100	103	72.5	103.9	47.5	108	57.6	35.5
ZP2-TF125HB□	125	128.5	92.2	131.6	56	116.5	66.1	44

How to Order

With adapter **ZP2 − X F 40 HB N**

Vacuum inlet direction

Symbol	Direction
X	Lateral

Specification (mechanism)

Symbol	Specification
F	Ball joint

Pad diameter

Symbol	Pad diameter
40	ø40
50	ø50
63	ø63
80	ø80
100	ø100
125	ø125

Pad material (□)

Symbol	Material
N	NBR
S	Silicone rubber*1
U	Urethane rubber
F	FKM
E	EPR

*1 Compliant with the FDA (USA Food and Drug Administration) regulation 21CFR§177.2600 for "Rubber articles intended for repeated use"

Pad form

Symbol	Form
HB	High rigidity (Bellows type)



Vacuum inlet direction Lateral

Replacement Part Nos.

Model	Pad unit part no.	Adapter assembly part no.	
ZP2-XF40HB□	ZP40HB□	ZP2A-XF1	With three M3 bolts
ZP2-XF50HB□	ZP50HB□		
ZP2-XF63HB□	ZP63HB□	ZP2A-XF2	With four M4 bolts
ZP2-XF80HB□	ZP80HB□		
ZP2-XF100HB□	ZP100HB□	ZP2A-XF3	With four M5 bolts
ZP2-XF125HB□	ZP125HB□		

* □ in the table indicates the pad material

Dimensions: With Adapter

ZP2-XF$^{40}_{50}$HB□

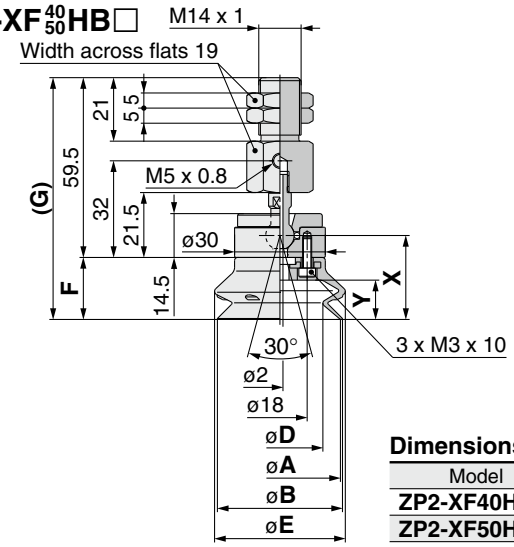

Dimensions

Model	A	B	D	E	F	G	X	Y
ZP2-XF40HB□	40	41.4	28.3	42.3	20.5	80	27.8	13
ZP2-XF50HB□	50	52	36.2	52.7	24	83.5	31.3	16.5

ZP2-XF$^{63}_{80}$HB□

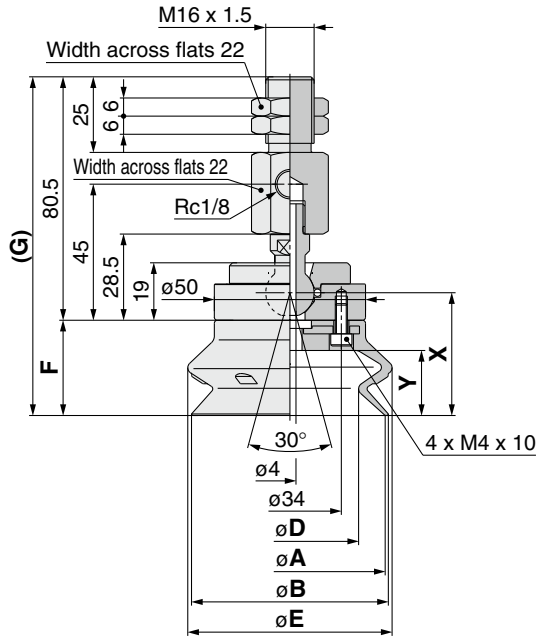

Dimensions

Model	A	B	D	E	F	G	X	Y
ZP2-XF63HB□	63	65.1	46	66.4	31.5	112	40.6	21.5
ZP2-XF80HB□	80	82.8	60.1	83.8	37	117.5	46.1	27.5

ZP2-XF$^{100}_{125}$HB□

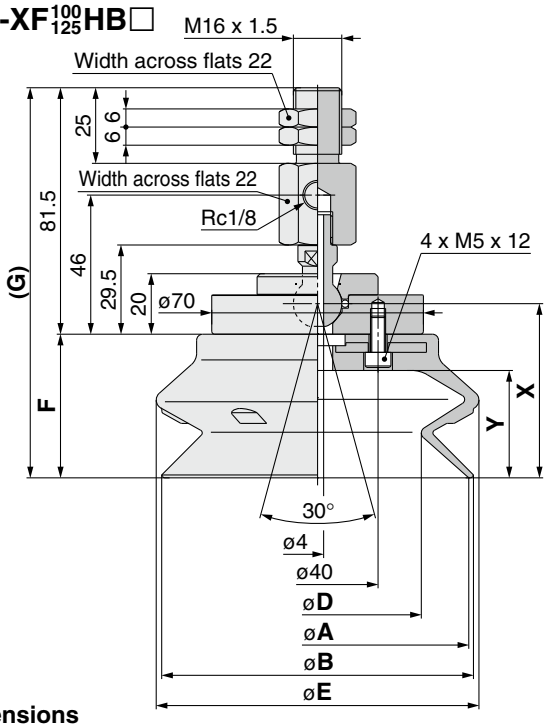

Dimensions

Model	A	B	D	E	F	G	X	Y
ZP2-XF100HB□	100	103	72.5	103.9	47.5	129	57.6	35.5
ZP2-XF125HB□	125	128.5	92.2	131.6	56	137.5	66.1	44

How to Order

With buffer **ZP2 − T F 40 HB N JB 25**

Vacuum inlet direction

Symbol	Direction
T	Vertical

Specification (mechanism)

Symbol	Specification
F	Ball joint

Pad diameter

Symbol	Pad diameter
40	ø40
50	ø50
63	ø63
80	ø80
100	ø100
125	ø125

Pad form

Symbol	Form
HB	High rigidity (Bellows type)

Buffer stroke (■)

Stroke \ Pad diameter	ø40 ø50	ø63 ø80	ø100 ø125
25	●	●	●
50	●	●	●
75	●	●	●
100	—	●	●

Buffer specification

Symbol	Specification
JB	Rotating With bushing Material: Brass
JF	Rotating With bushing Material: Structural steel

Pad material (□)

Symbol	Material
N	NBR
S	Silicone rubber*1
U	Urethane rubber
F	FKM
E	EPR

*1 Compliant with the FDA (USA Food and Drug Administration) regulation 21CFR§177.2600 for "Rubber articles intended for repeated use"



Vacuum inlet direction Vertical

Replacement Part Nos.

Model	Pad unit part no.	Buffer assembly part no.	
ZP2-TF40HB□(JB/JF)25	ZP40HB□	ZP2B-TF1(JB/JF)25	With three M3 bolts
ZP2-TF40HB□(JB/JF)50		ZP2B-TF1(JB/JF)50	
ZP2-TF40HB□(JB/JF)75		ZP2B-TF1(JB/JF)75	
ZP2-TF50HB□(JB/JF)25	ZP50HB□	ZP2B-TF1(JB/JF)25	
ZP2-TF50HB□(JB/JF)50		ZP2B-TF1(JB/JF)50	
ZP2-TF50HB□(JB/JF)75		ZP2B-TF1(JB/JF)75	
ZP2-TF63HB□(JB/JF)25	ZP63HB□	ZP2B-TF2(JB/JF)25	With four M4 bolts
ZP2-TF63HB□(JB/JF)50		ZP2B-TF2(JB/JF)50	
ZP2-TF63HB□(JB/JF)75		ZP2B-TF2(JB/JF)75	
ZP2-TF63HB□(JB/JF)100		ZP2B-TF2(JB/JF)100	
ZP2-TF80HB□(JB/JF)25	ZP80HB□	ZP2B-TF2(JB/JF)25	
ZP2-TF80HB□(JB/JF)50		ZP2B-TF2(JB/JF)50	
ZP2-TF80HB□(JB/JF)75		ZP2B-TF2(JB/JF)75	
ZP2-TF80HB□(JB/JF)100		ZP2B-TF2(JB/JF)100	
ZP2-TF100HB□(JB/JF)25	ZP100HB□	ZP2B-TF3(JB/JF)25	With four M5 bolts
ZP2-TF100HB□(JB/JF)50		ZP2B-TF3(JB/JF)50	
ZP2-TF100HB□(JB/JF)75		ZP2B-TF3(JB/JF)75	
ZP2-TF100HB□(JB/JF)100		ZP2B-TF3(JB/JF)100	
ZP2-TF125HB□(JB/JF)25	ZP125HB□	ZP2B-TF3(JB/JF)25	
ZP2-TF125HB□(JB/JF)50		ZP2B-TF3(JB/JF)50	
ZP2-TF125HB□(JB/JF)75		ZP2B-TF3(JB/JF)75	
ZP2-TF125HB□(JB/JF)100		ZP2B-TF3(JB/JF)100	

* □ in the table indicates the pad material

Buffer Specifications

Pad diameter		ø40, ø50	ø63, ø80, ø100, ø125
Stroke [mm]		25, 50, 75	25, 50, 75, 100
Spring reactive force [N]	**At 0 stroke**	6.9	10
	At full stroke	11.8	15
Buffer specifications	**JB**	Rotating With bushing Buffer body material: Brass	
		Nut tightening torque: 28 to 32 N·m	Nut tightening torque: 45 to 50 N·m
	JF	Rotating With bushing Buffer body material: Structural steel	
		Nut tightening torque: 48 to 52 N·m	Nut tightening torque: 75 to 80 N·m

Dimensions: With Buffer

ZP2-TF$^{40}_{50}$HB□$^{JB}_{JF}$■

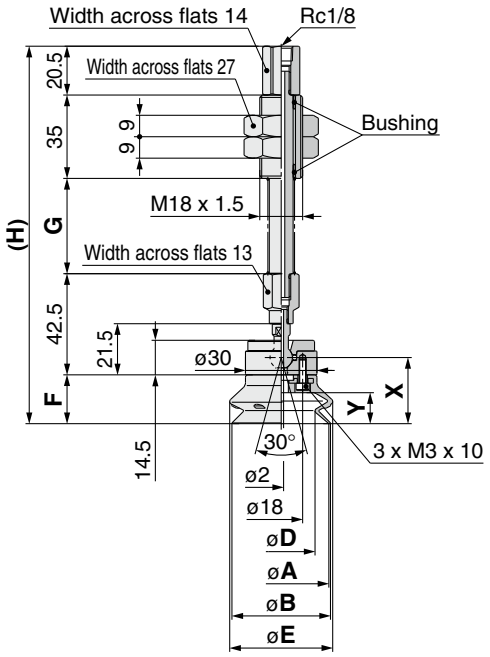

Dimensions

Model	A	B	D	E	F	G	H	X	Y
ZP2-TF40HB□(JB/JF)25	40	41.4	28.3	42.3	20.5	40	158.5	27.8	13
ZP2-TF40HB□(JB/JF)50						75	193.5		
ZP2-TF40HB□(JB/JF)75						111	229.5		
ZP2-TF50HB□(JB/JF)25	50	52	36.2	52.7	24	40	162	31.3	16.5
ZP2-TF50HB□(JB/JF)50						75	197		
ZP2-TF50HB□(JB/JF)75						111	233		

ZP2-TF$^{63}_{80}$HB□$^{JB}_{JF}$■

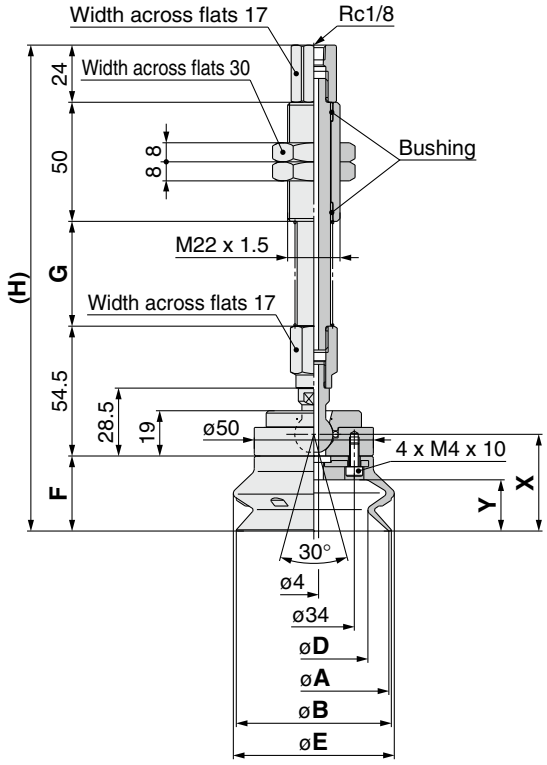

Dimensions

Model	A	B	D	E	F	G	H	X	Y
ZP2-TF63HB□(JB/JF)25	63	65.1	46	66.4	31.5	44	204	40.6	21.5
ZP2-TF63HB□(JB/JF)50						80	240		
ZP2-TF63HB□(JB/JF)75						120	280		
ZP2-TF63HB□(JB/JF)100						155	315		
ZP2-TF80HB□(JB/JF)25	80	82.8	60.1	83.8	37	44	209.5	46.1	27.5
ZP2-TF80HB□(JB/JF)50						80	245.5		
ZP2-TF80HB□(JB/JF)75						120	285.5		
ZP2-TF80HB□(JB/JF)100						155	320.5		

ZP2-TF$^{100}_{125}$HB□$^{JB}_{JF}$■

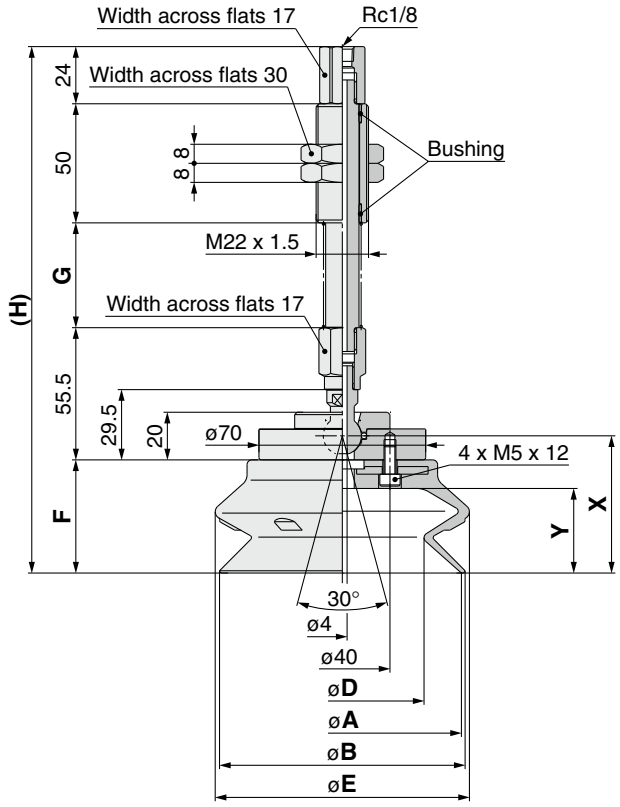

Dimensions

Model	A	B	D	E	F	G	H	X	Y
ZP2-TF100HB□(JB/JF)25	100	103	72.5	103.9	47.5	44	221	57.6	35.5
ZP2-TF100HB□(JB/JF)50						80	257		
ZP2-TF100HB□(JB/JF)75						120	297		
ZP2-TF100HB□(JB/JF)100						155	332		
ZP2-TF125HB□(JB/JF)25	125	128.5	92.2	131.6	56	44	229.5	66.1	44
ZP2-TF125HB□(JB/JF)50						80	265.5		
ZP2-TF125HB□(JB/JF)75						120	305.5		
ZP2-TF125HB□(JB/JF)100						155	340.5		

How to Order

With buffer **ZP2 − X F 40 HB N JB 25**

Vacuum inlet direction

Symbol	Direction
X	Lateral

Specification (mechanism)

Symbol	Specification
F	Ball joint

Pad diameter

Symbol	Pad diameter
40	ø40
50	ø50
63	ø63
80	ø80
100	ø100
125	ø125

Pad form

Symbol	Form
HB	High rigidity (Bellows type)

Pad material (□)

Symbol	Material
N	NBR
S	Silicone rubber*1
U	Urethane rubber
F	FKM
E	EPR

Buffer specification

Symbol	Specification
JB	Rotating With bushing Material: Brass
JF	Rotating With bushing Material: Structural steel

Buffer stroke (■)

Stroke \ Pad diameter	ø40 ø50	ø63 ø80	ø100 ø125
25	●	●	●
50	●	●	●
75	●	●	●
100	—	●	●



Vacuum inlet direction **Lateral**

*1 Compliant with the FDA (USA Food and Drug Administration) regulation 21CFR§177.2600 for "Rubber articles intended for repeated use"

Replacement Part Nos.

Model	Pad unit part no.	Buffer assembly part no.	
ZP2-XF40HB□(JB/JF)25	ZP40HB□	ZP2B-XF1(JB/JF)25	With three M3 bolts
ZP2-XF40HB□(JB/JF)50		ZP2B-XF1(JB/JF)50	
ZP2-XF40HB□(JB/JF)75		ZP2B-XF1(JB/JF)75	
ZP2-XF50HB□(JB/JF)25	ZP50HB□	ZP2B-XF1(JB/JF)25	
ZP2-XF50HB□(JB/JF)50		ZP2B-XF1(JB/JF)50	
ZP2-XF50HB□(JB/JF)75		ZP2B-XF1(JB/JF)75	
ZP2-XF63HB□(JB/JF)25	ZP63HB□	ZP2B-XF2(JB/JF)25	With four M4 bolts
ZP2-XF63HB□(JB/JF)50		ZP2B-XF2(JB/JF)50	
ZP2-XF63HB□(JB/JF)75		ZP2B-XF2(JB/JF)75	
ZP2-XF63HB□(JB/JF)100		ZP2B-XF2(JB/JF)100	
ZP2-XF80HB□(JB/JF)25	ZP80HB□	ZP2B-XF2(JB/JF)25	
ZP2-XF80HB□(JB/JF)50		ZP2B-XF2(JB/JF)50	
ZP2-XF80HB□(JB/JF)75		ZP2B-XF2(JB/JF)75	
ZP2-XF80HB□(JB/JF)100		ZP2B-XF2(JB/JF)100	
ZP2-XF100HB□(JB/JF)25	ZP100HB□	ZP2B-XF3(JB/JF)25	With four M5 bolts
ZP2-XF100HB□(JB/JF)50		ZP2B-XF3(JB/JF)50	
ZP2-XF100HB□(JB/JF)75		ZP2B-XF3(JB/JF)75	
ZP2-XF100HB□(JB/JF)100		ZP2B-XF3(JB/JF)100	
ZP2-XF125HB□(JB/JF)25	ZP125HB□	ZP2B-XF3(JB/JF)25	
ZP2-XF125HB□(JB/JF)50		ZP2B-XF3(JB/JF)50	
ZP2-XF125HB□(JB/JF)75		ZP2B-XF3(JB/JF)75	
ZP2-XF125HB□(JB/JF)100		ZP2B-XF3(JB/JF)100	

* □ in the table indicates the pad material

Buffer Specifications

Pad diameter		ø40, ø50	ø63, ø80, ø100, ø125
Stroke [mm]		25, 50, 75	25, 50, 75, 100
Spring reactive force [N]	**At 0 stroke**	6.9	10
	At full stroke	11.8	15
Buffer specifications	**JB**	Rotating With bushing Buffer body material: Brass	
		Nut tightening torque: 28 to 32 N·m	Nut tightening torque: 45 to 50 N·m
	JF	Rotating With bushing Buffer body material: Structural steel	
		Nut tightening torque: 48 to 52 N·m	Nut tightening torque: 75 to 80 N·m

Dimensions: With Buffer

ZP2-XF$^{40}_{50}$HB□$^{JB}_{JF}$■

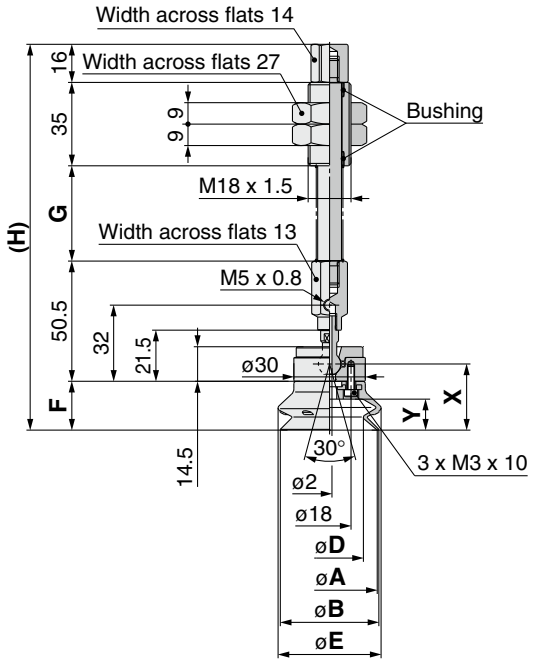

Dimensions

Model	A	B	D	E	F	G	H	X	Y
ZP2-XF40HB□(JB/JF)25	40	41.4	28.3	42.3	20.5	40	162	27.8	13
ZP2-XF40HB□(JB/JF)50						75	197		
ZP2-XF40HB□(JB/JF)75						111	233		
ZP2-XF50HB□(JB/JF)25	50	52	36.2	52.7	24	40	165.5	31.3	16.5
ZP2-XF50HB□(JB/JF)50						75	200.5		
ZP2-XF50HB□(JB/JF)75						111	236.5		

ZP2-XF$^{63}_{80}$HB□$^{JB}_{JF}$■

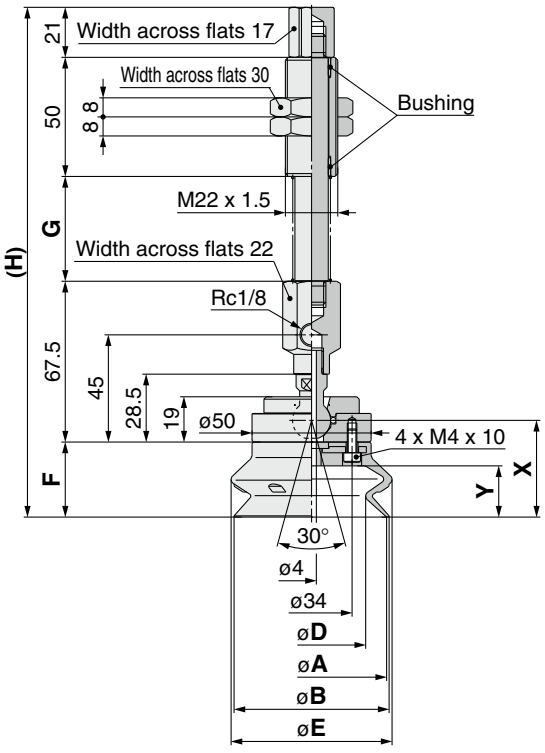

Dimensions

Model	A	B	D	E	F	G	H	X	Y
ZP2-XF63HB□(JB/JF)25	63	65.1	46	66.4	31.5	44	214	40.6	21.5
ZP2-XF63HB□(JB/JF)50						80	250		
ZP2-XF63HB□(JB/JF)75						120	290		
ZP2-XF63HB□(JB/JF)100						155	325		
ZP2-XF80HB□(JB/JF)25	80	82.8	60.1	83.8	37	44	219.5	46.1	27.5
ZP2-XF80HB□(JB/JF)50						80	255.5		
ZP2-XF80HB□(JB/JF)75						120	295.5		
ZP2-XF80HB□(JB/JF)100						155	330.5		

ZP2-XF$^{100}_{125}$HB□$^{JB}_{JF}$■

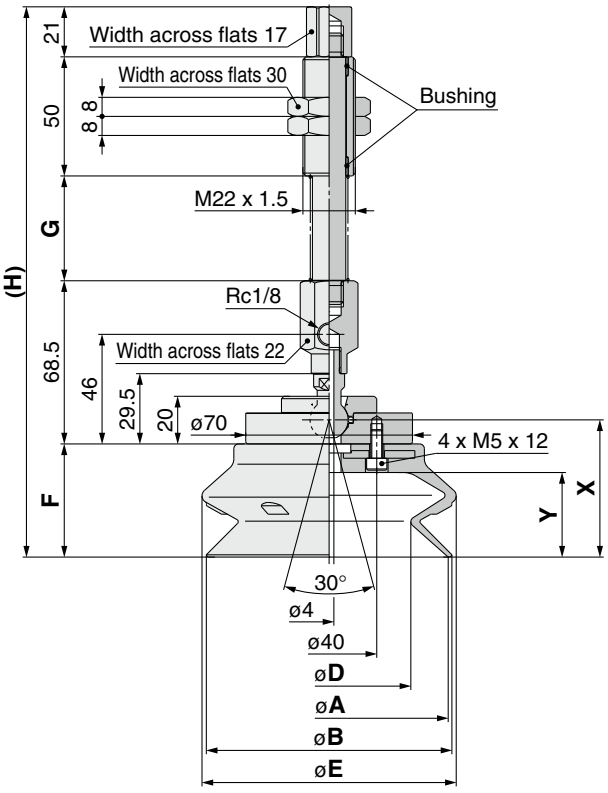

Dimensions

Model	A	B	D	E	F	G	H	X	Y
ZP2-XF100HB□(JB/JF)25	100	103	72.5	103.9	47.5	44	231	57.6	35.5
ZP2-XF100HB□(JB/JF)50						80	267		
ZP2-XF100HB□(JB/JF)75						120	307		
ZP2-XF100HB□(JB/JF)100						155	342		
ZP2-XF125HB□(JB/JF)25	125	128.5	92.2	131.6	56	44	239.5	66.1	44
ZP2-XF125HB□(JB/JF)50						80	275.5		
ZP2-XF125HB□(JB/JF)75						120	315.5		
ZP2-XF125HB□(JB/JF)100						155	350.5		

High Rigidity Pad

Pad diameter ø40, ø50, ø63, ø80, ø100, ø125

Symbol/Form

H: High rigidity (Flat type with ribs)

HB: High rigidity (Bellows type)

■ **Reinforced pad prevents deformation when transferring heavy or large workpieces.**



How to Order

Pad unit **ZP 40 H N**

Pad diameter

Symbol	Pad diameter
40	ø40
50	ø50
63	ø63
80	ø80
100	ø100
125	ø125

Pad material

Symbol	Material
N	NBR
S	Silicone rubber*1
U	Urethane rubber
F	FKM
E	EPR

*1 Compliant with the FDA (USA Food and Drug Administration) regulation 21CFR§177.2600 for "Rubber articles intended for repeated use"

Pad form

Symbol	Form
H	High rigidity (Flat type with ribs)
HB	High rigidity (Bellows type)

Dimensions: Pad Unit

ZP$^{40}_{50}$H□

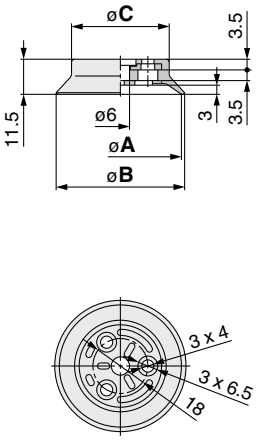

Dimensions

Model	A	B	C
ZP40H□	40	42.1	32
ZP50H□	50	52.1	42

ZP$^{63}_{80}$H□

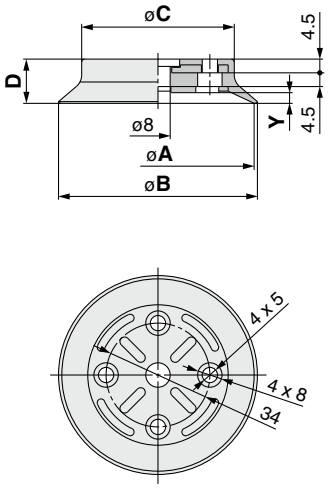

Dimensions

Model	A	B	C	D	Y
ZP63H□	63	65.2	50	14.5	3.5
ZP80H□	80	82.1	61	16.5	4.5

ZP$^{100}_{125}$H□

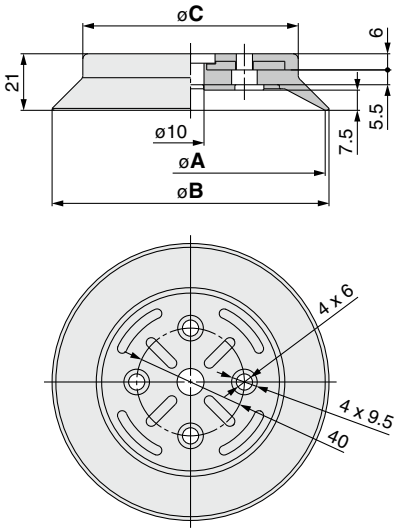

Dimensions

Model	A	B	C
ZP100H□	100	102.8	80
ZP125H□	125	127.7	104

ZP$^{40}_{50}$HB□

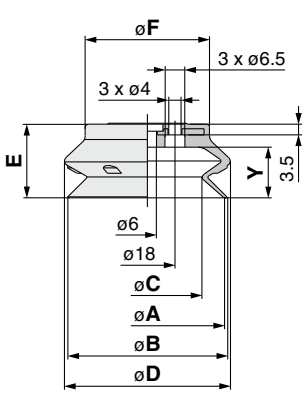

Dimensions

Model	A	B	C	D	E	F	Y
ZP40HB□	40	41.4	28.3	42.3	20.5	30	13
ZP50HB□	50	52	36.2	52.7	24	40.5	16.5

ZP$^{63}_{80}$HB□

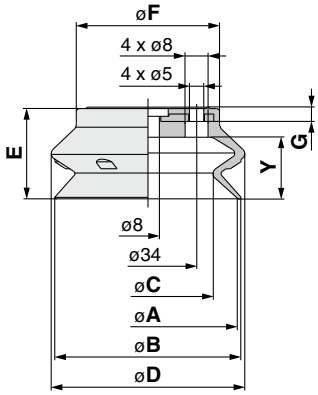

Dimensions

Model	A	B	C	D	E	F	G	Y
ZP63HB□	63	65.1	46	66.4	31.5	50	4.5	21.5
ZP80HB□	80	82.8	60.1	83.8	37	64	5	27.5

ZP$^{100}_{125}$HB□

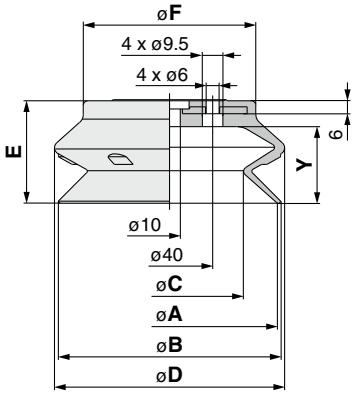

Dimensions

Model	A	B	C	D	E	F	Y
ZP100HB□	100	103	72.5	103.9	47.5	80	35.5
ZP125HB□	125	128.5	92.2	131.6	56	105	44

How to Order

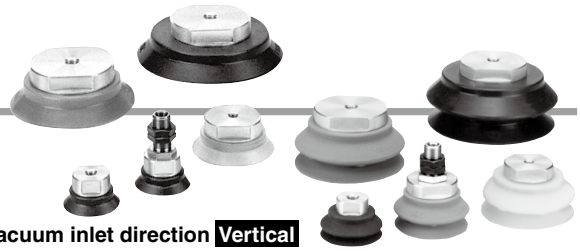

Vacuum inlet direction **Vertical**

With adapter **ZPT 40 H N − A14**

Pad diameter

Symbol	Pad diameter
40	ø40
50	ø50
63	ø63
80	ø80
100	ø100
125	ø125

Pad form (∗)

Symbol	Form
H	High rigidity (Flat type with ribs)
HB	High rigidity (Bellows type)

Pad material (□)

Symbol	Material
N	NBR
S	Silicone rubber∗1
U	Urethane rubber
F	FKM
E	EPR

∗1 Compliant with the FDA (USA Food and Drug Administration) regulation 21CFR§177.2600 for "Rubber articles intended for repeated use"

Mounting thread size (Vacuum inlet)

			Symbol	Thread size	Pad diameter ø40, ø50	Pad diameter ø63, ø80	Pad diameter ø100, ø125
Mounting	Male thread	M14 x 1	**A14**	Rc1/8	●	—	—
			A14N	NPT1/8	●	—	—
			A14T	NPTF1/8	●	—	—
		M16 x 1.5	**A16**	Rc1/8	—	●	●
			A16N	NPT1/8	—	●	●
			A16T	NPTF1/8	—	●	●
	Female thread		**B8**	M8 x 1.25	●	●	—
			B10	M10 x 1.5	●	●	—
			B12	M12 x 1.75	—	●	●
			B16	M16 x 1.5	—	●	●

Replacement Part Nos.

Model	Pad unit part no.	Adapter assembly part no.	
ZPT40∗□-A14	ZP40∗□	ZPA-T1-B01	With three M3 bolts
ZPT40∗□-A14N		ZPA-T1-N01	
ZPT40∗□-A14T		ZPA-T1-T01	
ZPT50∗□-A14	ZP50∗□	ZPA-T1-B01	
ZPT50∗□-A14N		ZPA-T1-N01	
ZPT50∗□-A14T		ZPA-T1-T01	
ZPT63∗□-A16	ZP63∗□	ZPA-T2-B01	With four M4 bolts
ZPT63∗□-A16N		ZPA-T2-N01	
ZPT63∗□-A16T		ZPA-T2-T01	
ZPT80∗□-A16	ZP80∗□	ZPA-T2-B01	
ZPT80∗□-A16N		ZPA-T2-N01	
ZPT80∗□-A16T		ZPA-T2-T01	
ZPT100∗□-A16	ZP100∗□	ZPA-T3-B01	With four M5 bolts
ZPT100∗□-A16N		ZPA-T3-N01	
ZPT100∗□-A16T		ZPA-T3-T01	
ZPT125∗□-A16	ZP125∗□	ZPA-T3-B01	
ZPT125∗□-A16N		ZPA-T3-N01	
ZPT125∗□-A16T		ZPA-T3-T01	

Model	Pad unit part no.	Adapter assembly part no.	
ZPT40∗□-B8	ZP40∗□	ZPA-T1-B8	With three M3 bolts
ZPT40∗□-B10		ZPA-T1-B10	
ZPT50∗□-B8	ZP50∗□	ZPA-T1-B8	
ZPT50∗□-B10		ZPA-T1-B10	
ZPT63∗□-B8	ZP63∗□	ZPA-T2-B8	With four M4 bolts
ZPT63∗□-B10		ZPA-T2-B10	
ZPT63∗□-B12		ZPA-T2-B12	
ZPT63∗□-B16		ZPA-T2-B16	
ZPT80∗□-B8	ZP80∗□	ZPA-T2-B8	
ZPT80∗□-B10		ZPA-T2-B10	
ZPT80∗□-B12		ZPA-T2-B12	
ZPT80∗□-B16		ZPA-T2-B16	
ZPT100∗□-B12	ZP100∗□	ZPA-T3-B12	With four M5 bolts
ZPT100∗□-B16		ZPA-T3-B16	
ZPT125∗□-B12	ZP125∗□	ZPA-T3-B12	
ZPT125∗□-B16		ZPA-T3-B16	

∗ ✻ in the table indicates the pad form
∗ □ in the table indicates the pad material

Dimensions: With Adapter

ZPT $^{40}_{50}$H□-A14 (Male thread)

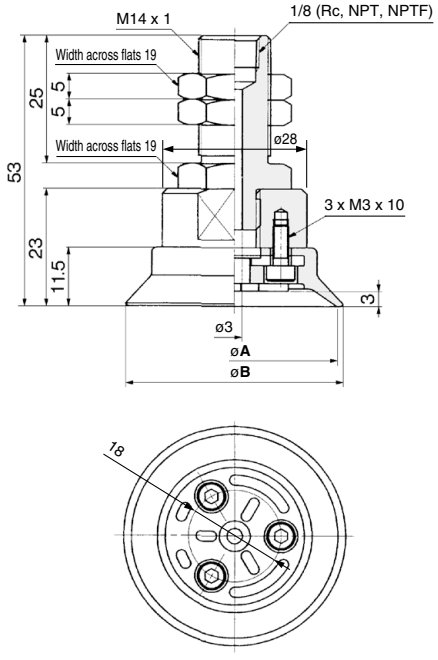

Dimensions

Model	A	B
ZPT40H□-A14	40	42.1
ZPT50H□-A14	50	52.1

ZPT $^{63}_{80}$H□-A16 (Male thread)

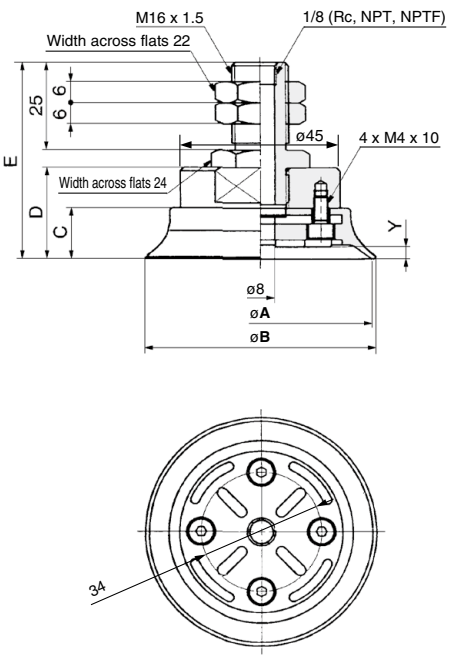

Dimensions

Model	A	B	C	D	E	Y
ZPT63H□-A16	63	65.2	14.5	26	56	3.5
ZPT80H□-A16	80	82.1	16.5	28	58	4.5

ZPT $^{100}_{125}$H□-A16 (Male thread)

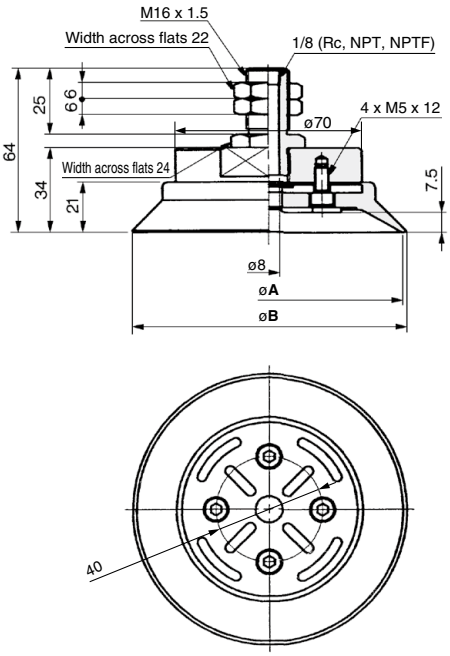

Dimensions

Model	A	B
ZPT100H□-A16	100	102.8
ZPT125H□-A16	125	127.7

Dimensions: With Adapter

ZPT$^{40}_{50}$HB□-A14 (Male thread)

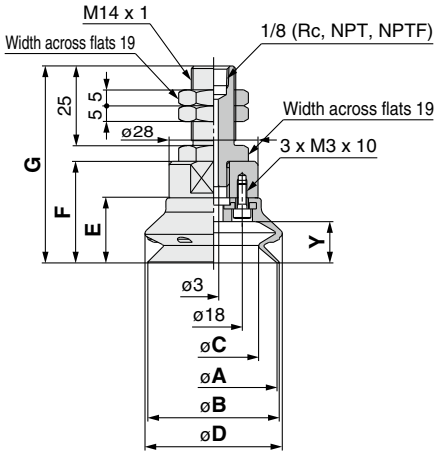

Dimensions

Model	A	B	C	D
ZPT40HB□-A14	40	41.4	28.3	42.3
ZPT50HB□-A14	50	52	36.2	52.7

Model	E	F	G	Y
ZPT40HB□-A14	20.5	32	62	13
ZPT50HB□-A14	24	35.5	65.5	16.5

ZPT$^{63}_{80}$HB□-A16 (Male thread)

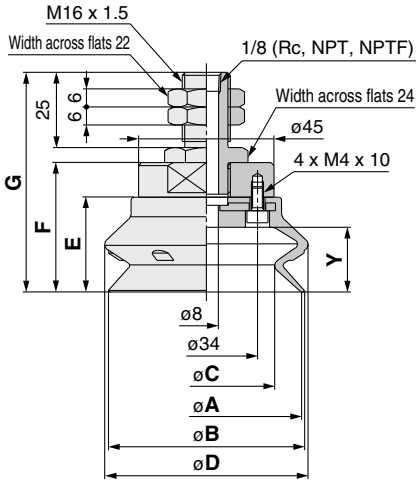

Dimensions

Model	A	B	C	D
ZPT63HB□-A16	63	65.1	46	66.4
ZPT80HB□-A16	80	82.8	60.1	83.8

Model	E	F	G	Y
ZPT63HB□-A16	31.5	43	73	21.5
ZPT80HB□-A16	37	48.5	78.5	27.5

ZPT$^{100}_{125}$HB□-A16 (Male thread)

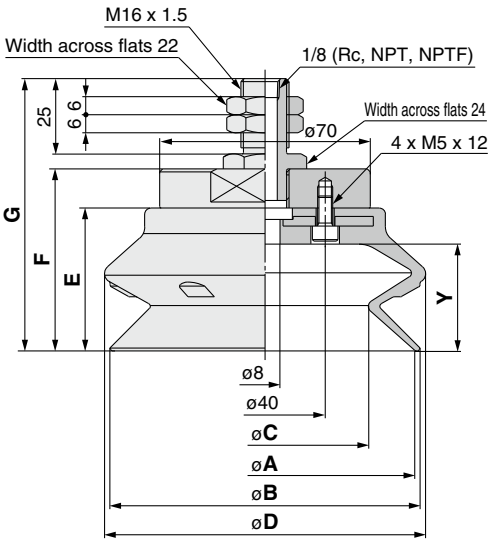

Dimensions

Model	A	B	C	D
ZPT100HB□-A16	100	103	72.5	103.9
ZPT125HB□-A16	125	128.5	92.2	131.6

Model	E	F	G	Y
ZPT100HB□-A16	47.5	60.5	90.5	35.5
ZPT125HB□-A16	56	69	99	44

ZPT$^{40}_{50}$H□-B□ (Female thread)

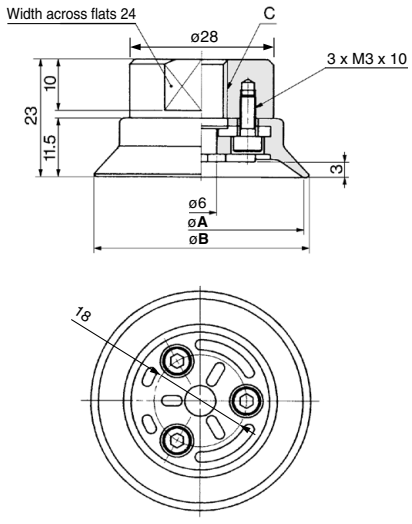

Dimensions

Model	A	B	C
ZPT40H□-B8	40	42.1	M8 x 1.25
ZPT40H□-B10			M10 x 1.5
ZPT50H□-B8	50	52.1	M8 x 1.25
ZPT50H□-B10			M10 x 1.5

ZPT$^{63}_{80}$H□-B□ (Female thread)

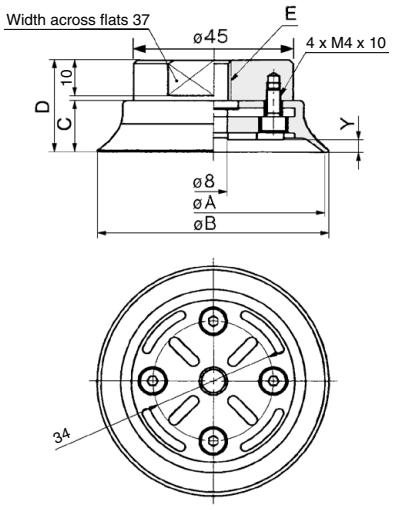

Dimensions

Model	A	B	C	D	E	Y
ZPT63H□-B8	63	65.2	14.5	26	M8 x 1.25	3.5
ZPT63H□-B10					M10 x 1.5	
ZPT63H□-B12					M12 x 1.75	
ZPT63H□-B16					M16 x 1.5	
ZPT80H□-B8	80	82.1	16.5	28	M8 x 1.25	4.5
ZPT80H□-B10					M10 x 1.5	
ZPT80H□-B12					M12 x 1.75	
ZPT80H□-B16					M16 x 1.5	

Dimensions: With Adapter

ZPT$^{100}_{125}$H□-B□ (Female thread)

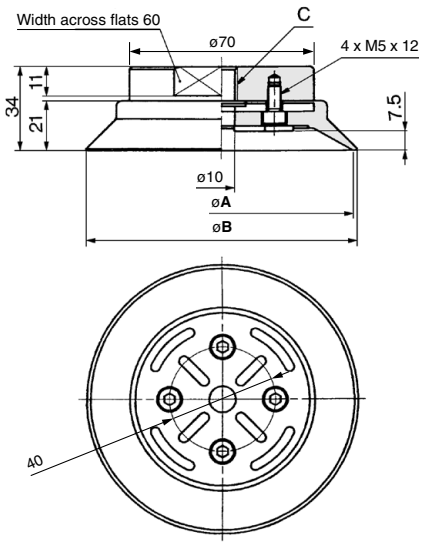

Dimensions

Model	A	B	C
ZPT100H□-B12	100	102.8	M12 x 1.75
ZPT100H□-B16			M16 x 1.5
ZPT125H□-B12	125	127.7	M12 x 1.75
ZPT125H□-B16			M16 x 1.5

ZPT$^{40}_{50}$HB□-B□ (Female thread)

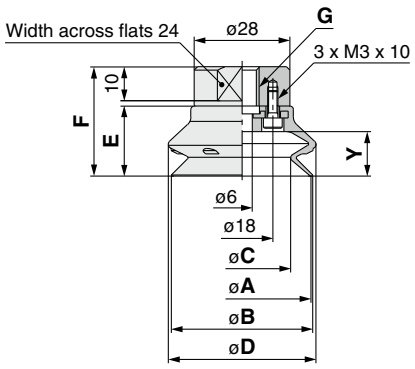

Dimensions

Model	A	B	C	D	E	F	G	Y
ZPT40HB□-B8	40	41.4	28.3	42.3	20.5	32	M8 x 1.25	13
ZPT40HB□-B10							M10 x 1.5	
ZPT50HB□-B8	50	52	36.2	52.7	24	35.5	M8 x 1.25	16.5
ZPT50HB□-B10							M10 x 1.5	

ZPT$^{63}_{80}$HB□-B□ (Female thread)

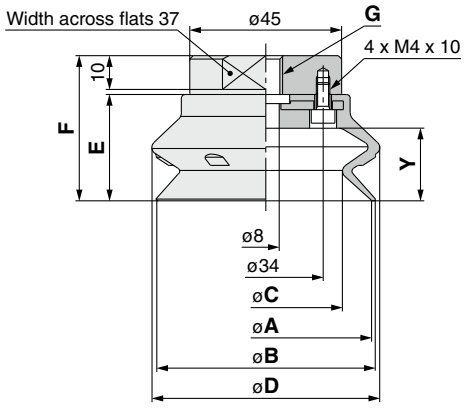

Dimensions

Model	A	B	C	D	E	F	G	Y
ZPT63HB□-B8	63	65.1	46	66.4	31.5	43	M8 x 1.25	21.5
ZPT63HB□-B10							M10 x 1.5	
ZPT63HB□-B12							M12 x 1.75	
ZPT63HB□-B16							M16 x 1.5	
ZPT80HB□-B8	80	82.8	60.1	83.8	37	48.5	M8 x 1.25	27.5
ZPT80HB□-B10							M10 x 1.5	
ZPT80HB□-B12							M12 x 1.75	
ZPT80HB□-B16							M16 x 1.5	

ZPT$^{100}_{125}$HB□-B□ (Female thread)

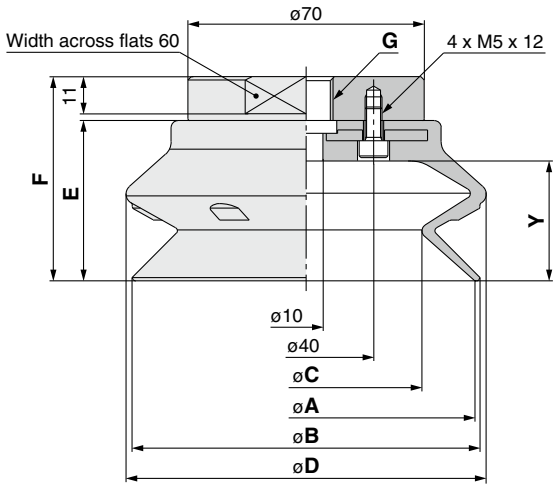

Dimensions

Model	A	B	C	D	E	F	G	Y
ZPT100HB□-B12	100	103	72.5	103.9	47.5	60.5	M12 x 1.75	35.5
ZPT100HB□-B16							M16 x 1.5	
ZPT125HB□-B12	125	128.5	92.2	131.6	56	69	M12 x 1.75	44
ZPT125HB□-B16							M16 x 1.5	

How to Order



With adapter **ZPX 40 H N – B01 – B8**

Pad diameter

Symbol	Pad diameter
40	ø40
50	ø50
63	ø63
80	ø80
100	ø100
125	ø125

Pad form (∗)

Symbol	Form
H	High rigidity (Flat type with ribs)
HB	High rigidity (Bellows type)

Vacuum inlet thread size

Symbol	Thread size
B01	Rc1/8
N01	NPT1/8
T01	NPTF1/8

Vacuum inlet direction **Lateral**

Mounting thread size

Symbol	Thread size	Pad diameter		
		ø40, ø50	**ø63, ø80**	**ø100, ø125**
B8	M8 x 1.25	●	—	—
B10	M10 x 1.5	●	●	●
B12	M12 x 1.75	—	●	●

Pad material (□)

Symbol	Material
N	NBR
S	Silicone rubber∗1
U	Urethane rubber
F	FKM
E	EPR

∗1 Compliant with the FDA (USA Food and Drug Administration) regulation 21CFR§177.2600 for "Rubber articles intended for repeated use"

Replacement Part Nos.

Model	Pad unit part no.	Adapter assembly part no.	
ZPX40∗□-B01-B8	ZP40∗□	ZPA-X1-B01-B8	With three M3 bolts
ZPX40∗□-N01-B8		ZPA-X1-N01-B8	
ZPX40∗□-T01-B8		ZPA-X1-T01-B8	
ZPX40∗□-B01-B10		ZPA-X1-B01-B10	
ZPX40∗□-N01-B10		ZPA-X1-N01-B10	
ZPX40∗□-T01-B10		ZPA-X1-T01-B10	
ZPX50∗□-B01-B8	ZP50∗□	ZPA-X1-B01-B8	With three M3 bolts
ZPX50∗□-N01-B8		ZPA-X1-N01-B8	
ZPX50∗□-T01-B8		ZPA-X1-T01-B8	
ZPX50∗□-B01-B10		ZPA-X1-B01-B10	
ZPX50∗□-N01-B10		ZPA-X1-N01-B10	
ZPX50∗□-T01-B10		ZPA-X1-T01-B10	
ZPX63∗□-B01-B10	ZP63∗□	ZPA-X2-B01-B10	With four M4 bolts
ZPX63∗□-N01-B10		ZPA-X2-N01-B10	
ZPX63∗□-T01-B10		ZPA-X2-T01-B10	
ZPX63∗□-B01-B12		ZPA-X2-B01-B12	
ZPX63∗□-N01-B12		ZPA-X2-N01-B12	
ZPX63∗□-T01-B12		ZPA-X2-T01-B12	

Model	Pad unit part no.	Adapter assembly part no.	
ZPX80∗□-B01-B10	ZP80∗□	ZPA-X2-B01-B10	With four M4 bolts
ZPX80∗□-N01-B10		ZPA-X2-N01-B10	
ZPX80∗□-T01-B10		ZPA-X2-T01-B10	
ZPX80∗□-B01-B12		ZPA-X2-B01-B12	
ZPX80∗□-N01-B12		ZPA-X2-N01-B12	
ZPX80∗□-T01-B12		ZPA-X2-T01-B12	
ZPX100∗□-B01-B10	ZP100∗□	ZPA-X3-B01-B10	With four M5 bolts
ZPX100∗□-N01-B10		ZPA-X3-N01-B10	
ZPX100∗□-T01-B10		ZPA-X3-T01-B10	
ZPX100∗□-B01-B12		ZPA-X3-B01-B12	
ZPX100∗□-N01-B12		ZPA-X3-N01-B12	
ZPX100∗□-T01-B12		ZPA-X3-T01-B12	
ZPX125∗□-B01-B10	ZP125∗□	ZPA-X3-B01-B10	With four M5 bolts
ZPX125∗□-N01-B10		ZPA-X3-N01-B10	
ZPX125∗□-T01-B10		ZPA-X3-T01-B10	
ZPX125∗□-B01-B12		ZPA-X3-B01-B12	
ZPX125∗□-N01-B12		ZPA-X3-N01-B12	
ZPX125∗□-T01-B12		ZPA-X3-T01-B12	

∗ ∗ in the table indicates the pad form
∗ □ in the table indicates the pad material

Dimensions: With Adapter

ZPX$^{40}_{50}$H□-01-$^{B8}_{B10}$

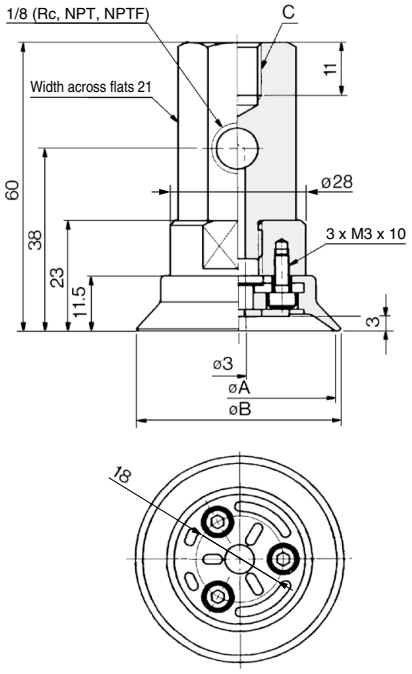

ZPX$^{63}_{80}$H□-01-$^{B10}_{B12}$

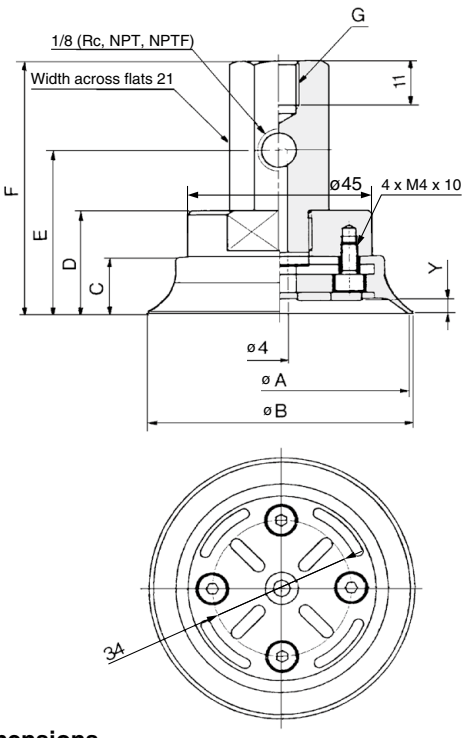

ZPX$^{100}_{125}$H□-01-$^{B10}_{B12}$

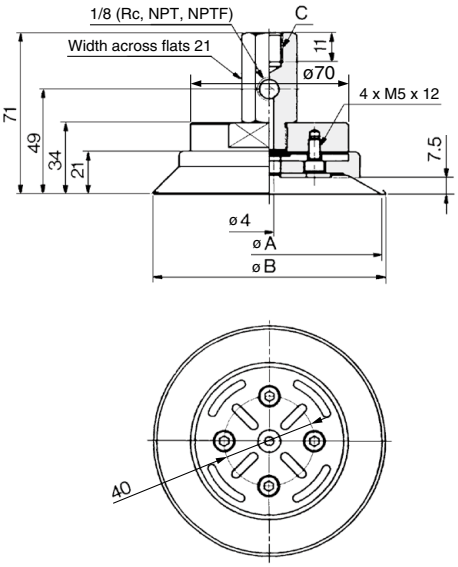

Dimensions

Model	A	B	C
ZPX40H□-01-B8	40	42.1	M8 x 1.25
ZPX40H□-01-B10			M10 x 1.5
ZPX50H□-01-B8	50	52.1	M8 x 1.25
ZPX50H□-01-B10			M10 x 1.5

Dimensions

Model	A	B	C	D	E	F	Y	G
ZPX63H□-01-B10	63	65.2	14.5	26	41	63	3.5	M10 x 1.5
ZPX63H□-01-B12								M12 x 1.75
ZPX80H□-01-B10	80	82.1	16.5	28	43	65	4.5	M10 x 1.5
ZPX80H□-01-B12								M12 x 1.75

Dimensions

Model	A	B	C
ZPX100H□-01-B10	100	102.8	M10 x 1.5
ZPX100H□-01-B12			M12 x 1.75
ZPX125H□-01-B10	125	127.7	M10 x 1.5
ZPX125H□-01-B12			M12 x 1.75

Dimensions: With Adapter

ZPX$^{40}_{50}$HB□-01-$^{B8}_{B10}$ **ZPX$^{63}_{80}$HB□-01-$^{B10}_{B12}$** **ZPX$^{100}_{125}$HB□-01-$^{B10}_{B12}$**

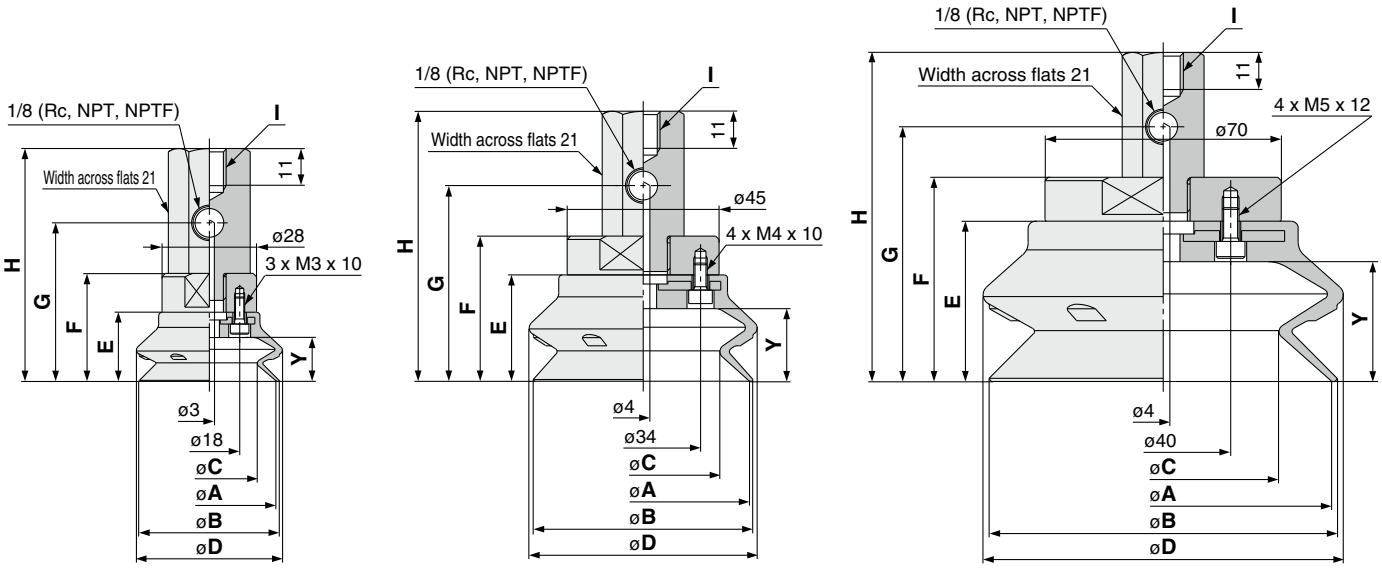

Dimensions

Model	A	B	C	D	E	F
ZPX40HB□-01-B8	40	41.4	28.3	42.3	20.5	32
ZPX40HB□-01-B10						
ZPX50HB□-01-B8	50	52	36.2	52.7	24	35.5
ZPX50HB□-01-B10						

Model	G	H	I	Y
ZPX40HB□-01-B8	47	69	M8 x 1.25	13
ZPX40HB□-01-B10			M10 x 1.5	
ZPX50HB□-01-B8	50.5	72.5	M8 x 1.25	16.5
ZPX50HB□-01-B10			M10 x 1.5	

Dimensions

Model	A	B	C	D	E	F
ZPX63HB□-01-B10	63	65.1	46	66.4	31.5	43
ZPX63HB□-01-B12						
ZPX80HB□-01-B10	80	82.8	60.1	83.8	37	48.5
ZPX80HB□-01-B12						

Model	G	H	I	Y
ZPX63HB□-01-B10	58	80	M10 x 1.5	21.5
ZPX63HB□-01-B12			M12 x 1.75	
ZPX80HB□-01-B10	63.5	85.5	M10 x 1.5	27.5
ZPX80HB□-01-B12			M12 x 1.75	

Dimensions

Model	A	B	C	D	E	F
ZPX100HB□-01-B10	100	103	72.5	103.9	47.5	60.5
ZPX100HB□-01-B12						
ZPX125HB□-01-B10	125	128.5	92.2	131.6	56	69
ZPX125HB□-01-B12						

Model	G	H	I	Y
ZPX100HB□-01-B10	75.5	97.5	M10 x 1.5	35.5
ZPX100HB□-01-B12			M12 x 1.75	
ZPX125HB□-01-B10	84	106	M10 x 1.5	44
ZPX125HB□-01-B12			M12 x 1.75	

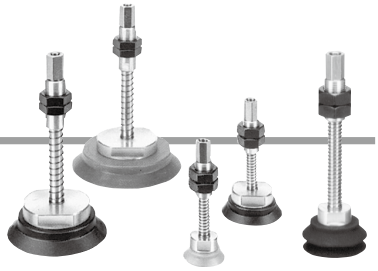

How to Order

With buffer **ZPT 40 H N J 25 − B01 − A18**

Pad diameter

Symbol	Pad diameter
40	ø40
50	ø50
63	ø63
80	ø80
100	ø100
125	ø125

Pad form (∗)

Symbol	Form
H	High rigidity (Flat type with ribs)
HB	High rigidity (Bellows type)

Vacuum inlet thread size

Symbol	Thread size
B01	Rc1/8
N01	NPT1/8
T01	NPTF1/8

Mounting thread size

Symbol	Thread size
A18	M18 x 1.5 (ø40 to ø80)
A22	M22 x 1.5 (ø100, ø125)

Vacuum inlet direction **Vertical**

Pad material (□)

Symbol	Material
N	NBR
S	Silicone rubber∗1
U	Urethane rubber
F	FKM
E	EPR

∗1 Compliant with the FDA (USA Food and Drug Administration) regulation 21CFR§177.2600 for "Rubber articles intended for repeated use"

Buffer body material (★)

Symbol	Material
J	Aluminum alloy
JB	Brass + With bushing
JF	Structural steel + With bushing

Buffer stroke (■)

Stroke	ø40	ø50	ø63	ø80	ø100	ø125
25	●	●	●	●	●	●
50	●	●	●	●	●	●
75	●	●	●	●	●	●
100	—	—	—	—	●	●

Buffer Specifications (Rotating)

Pad diameter		ø40 to ø80	ø100, ø125
Stroke [mm]		25, 50, 75	25, 50, 75, 100
Spring reactive force [N]	**At 0 stroke**	6.9	10
	At full stroke	11.8	15

Nut Tightening Torque [N·m]

Mounting thread size \ Buffer body material	Aluminum alloy	Brass + With bushing	Structural steel + With bushing
M18 x 1.5	9.5 to 10.5	28 to 32	48 to 52
M22 x 1.5	9.5 to 10.5	45 to 50	75 to 80

Replacement Part Nos.

Model	Pad unit part no.	Buffer assembly part no.	
ZPT40∗□★25-(B/N/T)01-A18	ZP40∗□	ZPB-T1★25-(B/N/T)01	With three M3 bolts
ZPT40∗□★50-(B/N/T)01-A18		ZPB-T1★50-(B/N/T)01	
ZPT40∗□★75-(B/N/T)01-A18		ZPB-T1★75-(B/N/T)01	
ZPT50∗□★25-(B/N/T)01-A18	ZP50∗□	ZPB-T1★25-(B/N/T)01	
ZPT50∗□★50-(B/N/T)01-A18		ZPB-T1★50-(B/N/T)01	
ZPT50∗□★75-(B/N/T)01-A18		ZPB-T1★75-(B/N/T)01	
ZPT63∗□★25-(B/N/T)01-A18	ZP63∗□	ZPB-T2★25-(B/N/T)01	With four M4 bolts
ZPT63∗□★50-(B/N/T)01-A18		ZPB-T2★50-(B/N/T)01	
ZPT63∗□★75-(B/N/T)01-A18		ZPB-T2★75-(B/N/T)01	
ZPT80∗□★25-(B/N/T)01-A18	ZP80∗□	ZPB-T2★25-(B/N/T)01	
ZPT80∗□★50-(B/N/T)01-A18		ZPB-T2★50-(B/N/T)01	
ZPT80∗□★75-(B/N/T)01-A18		ZPB-T2★75-(B/N/T)01	
ZPT100∗□★25-(B/N/T)01-A22	ZP100∗□	ZPB-T3★25-(B/N/T)01	With four M5 bolts
ZPT100∗□★50-(B/N/T)01-A22		ZPB-T3★50-(B/N/T)01	
ZPT100∗□★75-(B/N/T)01-A22		ZPB-T3★75-(B/N/T)01	
ZPT100∗□★100-(B/N/T)01-A22		ZPB-T3★100-(B/N/T)01	
ZPT125∗□★25-(B/N/T)01-A22	ZP125∗□	ZPB-T3★25-(B/N/T)01	
ZPT125∗□★50-(B/N/T)01-A22		ZPB-T3★50-(B/N/T)01	
ZPT125∗□★75-(B/N/T)01-A22		ZPB-T3★75-(B/N/T)01	
ZPT125∗□★100-(B/N/T)01-A22		ZPB-T3★100-(B/N/T)01	

∗ ∗ in the table indicates the pad form
∗ □ in the table indicates the pad material
∗ ★ in the table indicates the buffer body material

Dimensions: With Buffer

ZPT$^{40}_{50}$H□★■-□01□-A18

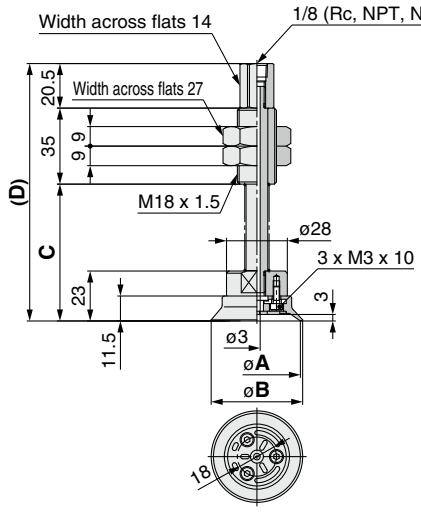

ZPT$^{63}_{80}$H□★■-□01□-A18

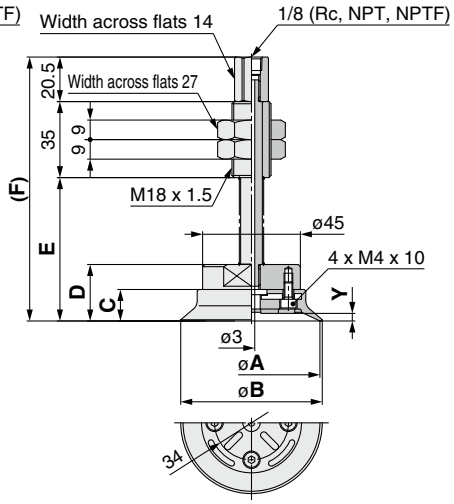

ZPT$^{100}_{125}$H□★■-□01□-A22

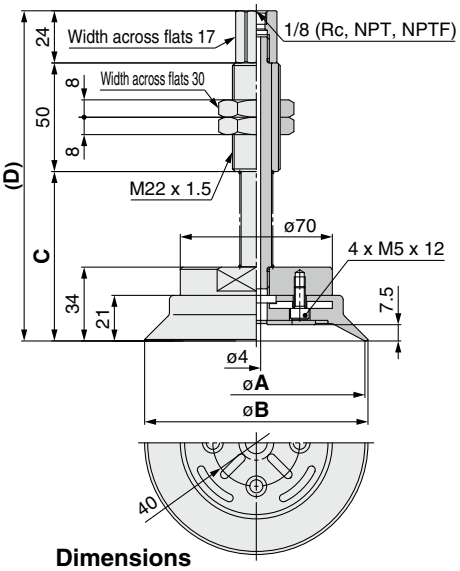

Dimensions

Model	A	B	C	D
ZPT40H□★25-□01□-A18	40	42.1	63	118.5
ZPT40H□★50-□01□-A18			98	153.5
ZPT40H□★75-□01□-A18			134	189.5
ZPT50H□★25-□01□-A18	50	52.1	63	118.5
ZPT50H□★50-□01□-A18			98	153.5
ZPT50H□★75-□01□-A18			134	189.5

Dimensions

Model	A	B	C	D	E	F	Y
ZPT63H□★25-□01□-A18	63	65.2	14.5	26	66	121.5	3.5
ZPT63H□★50-□01□-A18					101	156.5	
ZPT63H□★75-□01□-A18					137	192.5	
ZPT80H□★25-□01□-A18	80	82.1	16.5	28	68	123.5	4.5
ZPT80H□★50-□01□-A18					103	158.5	
ZPT80H□★75-□01□-A18					139	194.5	

Dimensions

Model	A	B	C	D
ZPT100H□★25-□01□-A22	100	102.8	78	152
ZPT100H□★50-□01□-A22			114	188
ZPT100H□★75-□01□-A22			154	228
ZPT100H□★100-□01□-A22			189	263
ZPT125H□★25-□01□-A22	125	127.7	78	152
ZPT125H□★50-□01□-A22			114	188
ZPT125H□★75-□01□-A22			154	228
ZPT125H□★100-□01□-A22			189	263

Dimensions: With Buffer

ZPT$^{40}_{50}$HB□★■-01-A18

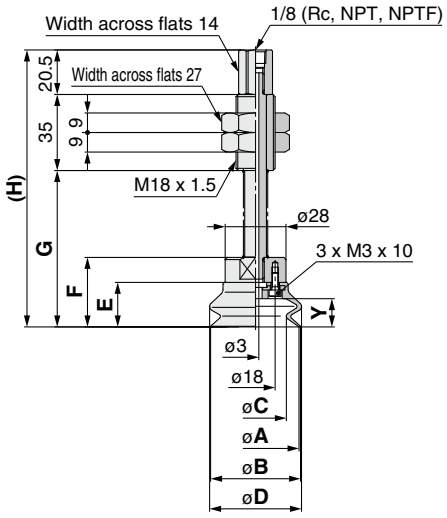

ZPT$^{63}_{80}$HB□★■-01-A18

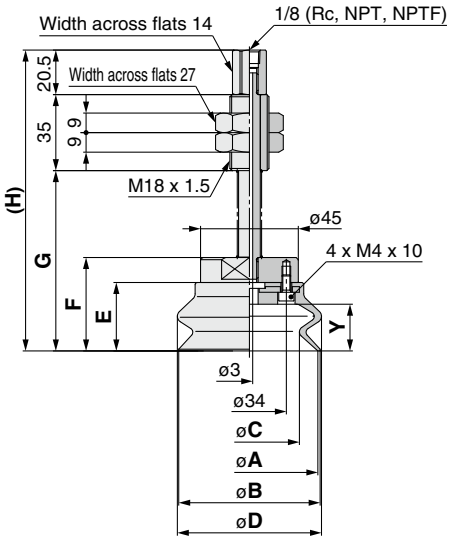

ZPT$^{100}_{125}$HB□★■-01-A22

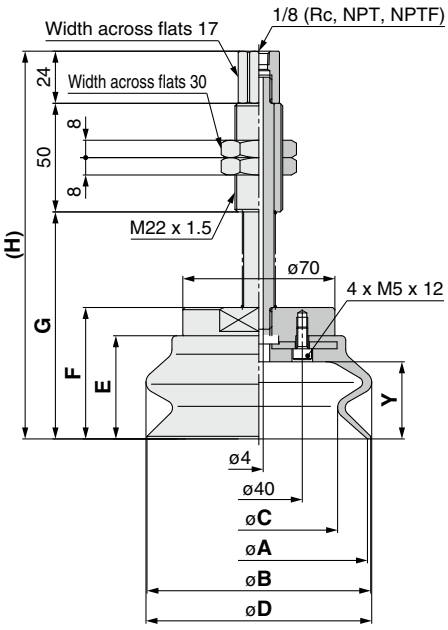

Dimensions

Model	A	B	C	D	E
ZPT40HB□★25-01-A18	40	41.4	28.3	42.3	20.5
ZPT40HB□★50-01-A18					
ZPT40HB□★75-01-A18					
ZPT50HB□★25-01-A18	50	52	36.2	52.7	24
ZPT50HB□★50-01-A18					
ZPT50HB□★75-01-A18					

Model	F	G	H	Y
ZPT40HB□★25-01-A18	32	72	127.5	13
ZPT40HB□★50-01-A18		107	162.5	
ZPT40HB□★75-01-A18		143	198.5	
ZPT50HB□★25-01-A18	35.5	75.5	131	16.5
ZPT50HB□★50-01-A18		110.5	166	
ZPT50HB□★75-01-A18		146.5	202	

Dimensions

Model	A	B	C	D	E
ZPT63HB□★25-01-A18	63	65.1	46	66.4	31.5
ZPT63HB□★50-01-A18					
ZPT63HB□★75-01-A18					
ZPT80HB□★25-01-A18	80	82.8	60.1	83.8	37
ZPT80HB□★50-01-A18					
ZPT80HB□★75-01-A18					

Model	F	G	H	Y
ZPT63HB□★25-01-A18	43	83	138.5	21.5
ZPT63HB□★50-01-A18		118	173.5	
ZPT63HB□★75-01-A18		154	209.5	
ZPT80HB□★25-01-A18	48.5	88.5	144	27.5
ZPT80HB□★50-01-A18		123.5	179	
ZPT80HB□★75-01-A18		159.5	215	

Dimensions

Model	A	B	C	D	E
ZPT100HB□★25-01-A22	100	103	72.5	103.9	47.5
ZPT100HB□★50-01-A22					
ZPT100HB□★75-01-A22					
ZPT100HB□★100-01-A22					
ZPT125HB□★25-01-A22	125	128.5	92.2	131.6	56
ZPT125HB□★50-01-A22					
ZPT125HB□★75-01-A22					
ZPT125HB□★100-01-A22					

Model	F	G	H	Y
ZPT100HB□★25-01-A22	60.5	104.5	178.5	35.5
ZPT100HB□★50-01-A22		140.5	214.5	
ZPT100HB□★75-01-A22		180.5	254.5	
ZPT100HB□★100-01-A22		215.5	289.5	
ZPT125HB□★25-01-A22	69	113	187	44
ZPT125HB□★50-01-A22		149	223	
ZPT125HB□★75-01-A22		189	263	
ZPT125HB□★100-01-A22		224	298	

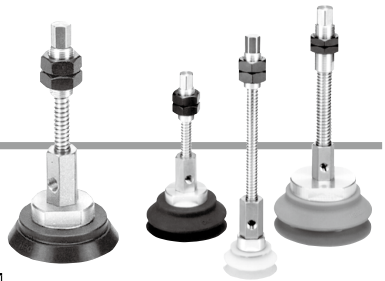

How to Order

With buffer **ZPX 40 H N J 25 − B01 − A18**

Pad diameter

Symbol	Pad diameter
40	ø40
50	ø50
63	ø63
80	ø80
100	ø100
125	ø125

Pad form (∗)

Symbol	Form
H	High rigidity (Flat type with ribs)
HB	High rigidity (Bellows type)

Vacuum inlet thread size

Symbol	Thread size
B01	Rc1/8
N01	NPT1/8
T01	NPTF1/8

Mounting thread size

Symbol	Thread size
A18	M18 x 1.5 (ø40 to ø80)
A22	M22 x 1.5 (ø100, ø125)

Vacuum inlet direction **Lateral**

Pad material (□)

Symbol	Material
N	NBR
S	Silicone rubber∗1
U	Urethane rubber
F	FKM
E	EPR

∗1 Compliant with the FDA (USA Food and Drug Administration) regulation 21CFR§177.2600 for "Rubber articles intended for repeated use"

Buffer body material (★)

Symbol	Material
J	Aluminum alloy
JB	Brass + With bushing
JF	Structural steel + With bushing

Buffer stroke (■)

Stroke	ø40	ø50	ø63	ø80	ø100	ø125
25	●	●	●	●	●	●
50	●	●	●	●	●	●
75	●	●	●	●	●	●
100	—	—	—	—	●	●

Replacement Part Nos.

Model	Pad unit part no.	Buffer assembly part no.	
ZPX40∗□★25-(B/N/T)01-A18	ZP40∗□	ZPB-X1★25-(B/N/T)01	With three M3 bolts
ZPX40∗□★50-(B/N/T)01-A18		ZPB-X1★50-(B/N/T)01	
ZPX40∗□★75-(B/N/T)01-A18		ZPB-X1★75-(B/N/T)01	
ZPX50∗□★25-(B/N/T)01-A18	ZP50∗□	ZPB-X1★25-(B/N/T)01	
ZPX50∗□★50-(B/N/T)01-A18		ZPB-X1★50-(B/N/T)01	
ZPX50∗□★75-(B/N/T)01-A18		ZPB-X1★75-(B/N/T)01	
ZPX63∗□★25-(B/N/T)01-A18	ZP63∗□	ZPB-X2★25-(B/N/T)01	With four M4 bolts
ZPX63∗□★50-(B/N/T)01-A18		ZPB-X2★50-(B/N/T)01	
ZPX63∗□★75-(B/N/T)01-A18		ZPB-X2★75-(B/N/T)01	
ZPX80∗□★25-(B/N/T)01-A18	ZP80∗□	ZPB-X2★25-(B/N/T)01	
ZPX80∗□★50-(B/N/T)01-A18		ZPB-X2★50-(B/N/T)01	
ZPX80∗□★75-(B/N/T)01-A18		ZPB-X2★75-(B/N/T)01	
ZPX100∗□★25-(B/N/T)01-A22	ZP100∗□	ZPB-X3★25-(B/N/T)01	With four M5 bolts
ZPX100∗□★50-(B/N/T)01-A22		ZPB-X3★50-(B/N/T)01	
ZPX100∗□★75-(B/N/T)01-A22		ZPB-X3★75-(B/N/T)01	
ZPX100∗□★100-(B/N/T)01-A22		ZPB-X3★100-(B/N/T)01	
ZPX125∗□★25-(B/N/T)01-A22	ZP125∗□	ZPB-X3★25-(B/N/T)01	
ZPX125∗□★50-(B/N/T)01-A22		ZPB-X3★50-(B/N/T)01	
ZPX125∗□★75-(B/N/T)01-A22		ZPB-X3★75-(B/N/T)01	
ZPX125∗□★100-(B/N/T)01-A22		ZPB-X3★100-(B/N/T)01	

∗ ∗ in the table indicates the pad form
∗ □ in the table indicates the pad material
∗ ★ in the table indicates the buffer body material

Buffer Specifications (Rotating)

Pad diameter		ø40 to ø80	ø100, ø125
Stroke [mm]		25, 50, 75	25, 50, 75, 100
Spring reactive force [N]	**At 0 stroke**	6.9	10
	At full stroke	11.8	15

Nut Tightening Torque [N·m]

Mounting thread size \ Buffer body material	Aluminum alloy	Brass + With bushing	Structural steel + With bushing
M18 x 1.5	9.5 to 10.5	28 to 32	48 to 52
M22 x 1.5	9.5 to 10.5	45 to 50	75 to 80

Dimensions: With Buffer

ZPX$^{40}_{50}$H□★■-01-A18

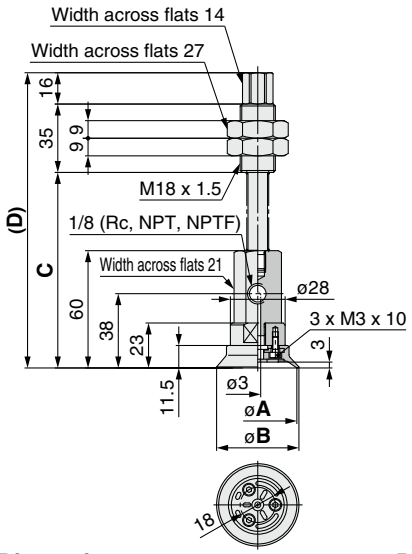

ZPX$^{63}_{80}$H□★■-01-A18

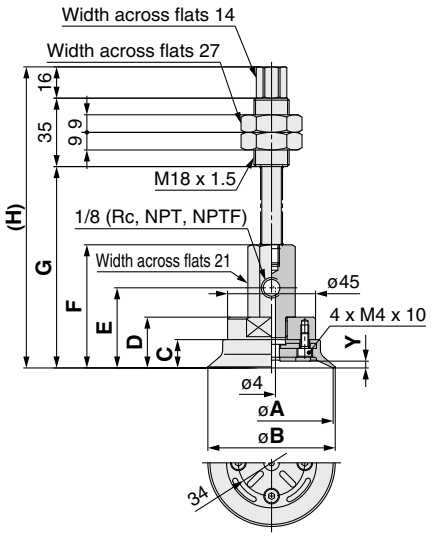

ZPX$^{100}_{125}$H□★■-01-A22

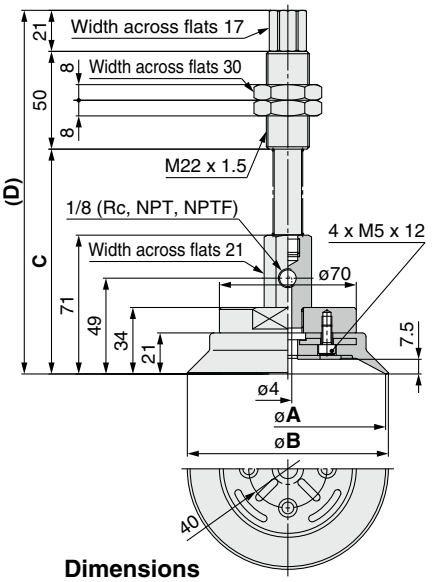

Dimensions

Model	A	B	C	D
ZPX40H□★25-01-A18	40	42.1	100	151
ZPX40H□★50-01-A18			135	186
ZPX40H□★75-01-A18			171	222
ZPX50H□★25-01-A18	50	52.1	100	151
ZPX50H□★50-01-A18			135	186
ZPX50H□★75-01-A18			171	222

Dimensions

Model	A	B	C	D	E	F	G	H	Y
ZPX63H□★25-01-A18	63	65.2	14.5	26	41	63	103	154	3.5
ZPX63H□★50-01-A18							138	189	
ZPX63H□★75-01-A18							174	225	
ZPX80H□★25-01-A18	80	82.1	16.5	28	43	65	105	156	4.5
ZPX80H□★50-01-A18							140	191	
ZPX80H□★75-01-A18							176	227	

Dimensions

Model	A	B	C	D
ZPX100H□★25-01-A22	100	102.8	115	186
ZPX100H□★50-01-A22			151	222
ZPX100H□★75-01-A22			191	262
ZPX100H□★100-01-A22			226	297
ZPX125H□★25-01-A22	125	127.7	115	186
ZPX125H□★50-01-A22			151	222
ZPX125H□★75-01-A22			191	262
ZPX125H□★100-01-A22			226	297

Dimensions: With Buffer

ZPX$^{40}_{50}$HB□★■-01-A18

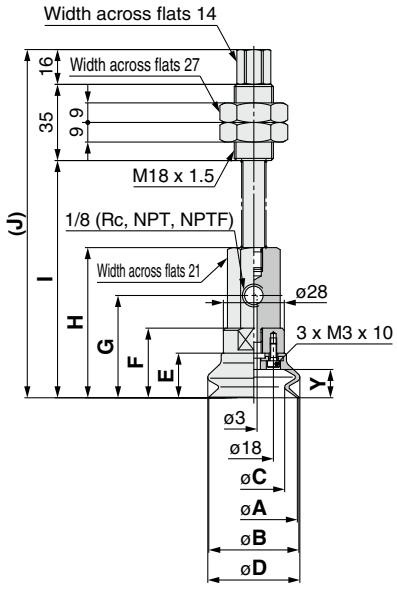

ZPX$^{63}_{80}$HB□★■-01-A18

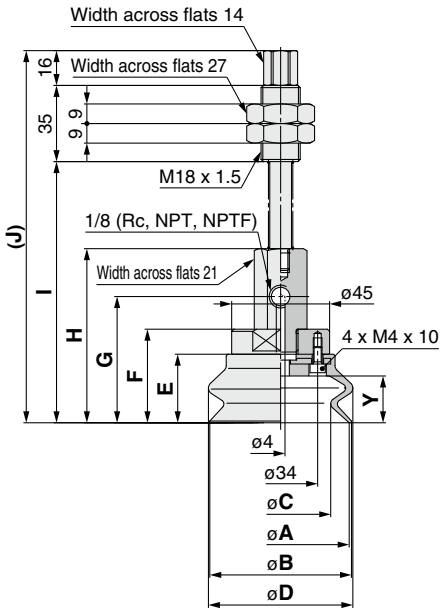

ZPX$^{100}_{125}$HB□★■-01-A22

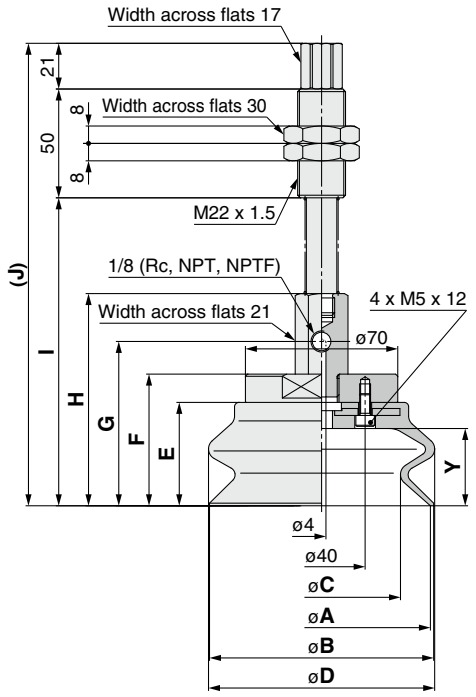

Dimensions

Model	A	B	C	D	E	F
ZPX40HB□★25-01-A18	40	41.4	28.3	42.3	20.5	32
ZPX40HB□★50-01-A18						
ZPX40HB□★75-01-A18						
ZPX50HB□★25-01-A18	50	52	36.2	52.7	24	35.5
ZPX50HB□★50-01-A18						
ZPX50HB□★75-01-A18						

Model	G	H	I	J	Y
ZPX40HB□★25-01-A18	47	69	109	160	13
ZPX40HB□★50-01-A18			144	195	
ZPX40HB□★75-01-A18			180	231	
ZPX50HB□★25-01-A18	50.5	72.5	112.5	163.5	16.5
ZPX50HB□★50-01-A18			147.5	198.5	
ZPX50HB□★75-01-A18			183.5	234.5	

Dimensions

Model	A	B	C	D	E	F
ZPX63HB□★25-01-A18	63	65.1	46	66.4	31.5	43
ZPX63HB□★50-01-A18						
ZPX63HB□★75-01-A18						
ZPX80HB□★25-01-A18	80	82.8	60.1	83.8	37	48.5
ZPX80HB□★50-01-A18						
ZPX80HB□★75-01-A18						

Model	G	H	I	J	Y
ZPX63HB□★25-01-A18	58	80	120	171	21.5
ZPX63HB□★50-01-A18			155	206	
ZPX63HB□★75-01-A18			191	242	
ZPX80HB□★25-01-A18	63.5	85.5	125.5	176.5	27.5
ZPX80HB□★50-01-A18			160.5	211.5	
ZPX80HB□★75-01-A18			196.5	247.5	

Dimensions

Model	A	B	C	D	E	F
ZPX100HB□★25-01-A22	100	103	72.5	103.9	47.5	60.5
ZPX100HB□★50-01-A22						
ZPX100HB□★75-01-A22						
ZPX100HB□★100-01-A22						
ZPX125HB□★25-01-A22	125	128.5	92.2	131.6	56	69
ZPX125HB□★50-01-A22						
ZPX125HB□★75-01-A22						
ZPX125HB□★100-01-A22						

Model	G	H	I	J	Y
ZPX100HB□★25-01-A22	75.5	97.5	141.5	212.5	35.5
ZPX100HB□★50-01-A22			177.5	248.5	
ZPX100HB□★75-01-A22			217.5	288.5	
ZPX100HB□★100-01-A22			252.5	323.5	
ZPX125HB□★25-01-A22	84	106	150	221	44
ZPX125HB□★50-01-A22			186	257	
ZPX125HB□★75-01-A22			226	297	
ZPX125HB□★100-01-A22			261	332	

Made to Order
Specific Product Precautions

Be sure to read this before handling the products.
Refer to page 375 for safety instructions. For vacuum equipment and vacuum pad precautions, refer to pages 376 to 379.

Mounting

1. Tighten the screw within the specified torque range when mounting the buffer.

Tightening with a torque outside of the specified range may cause malfunction.

ZP High Rigidity Series

Model	Connection thread	Buffer body material	Tightening torque [N·m]
ZP□(40 to 80)□J□-□-□	M18 x 1.5	Aluminum alloy	9.5 to 10.5
ZP□(40 to 80)□JB□-□-□		Brass	28 to 32
ZP□(40 to 80)□JF□-□-□		Structural steel	48 to 52
ZP□(100/125)□J□-□-□	M22 x 1.5	Aluminum alloy	9.5 to 10.5
ZP□(100/125)□JB□-□-□		Brass	45 to 50
ZP□(100/125)□JF□-□-□		Structural steel	75 to 80

ZP2 High Rigidity Ball Joint Series

Model	Connection thread	Buffer body material	Tightening torque [N·m]
ZP2-□(40/50)□JB□	M18 x 1.5	Brass	28 to 32
ZP2-□(40/50)□JF□		Structural steel	48 to 52
ZP2-□(63 to 125)□JF□-□-□	M22 x 1.5	Brass	45 to 50
ZP2-□(63 to 125)□JF□-□-□		Structural steel	75 to 80

Pad Mounting

1. How to mount the ZP/ZP2 high rigidity pad

Remove bolts with a hex key wrench from the pad underside. Tighten the new pad with the bolts ensuring there is no gap between the adapter plate and the pad.

Tightening Torque for Replacement of High Rigidity Pads

Pad diameter	Connection thread	Tightening torque [N·m]
ø40, ø50	M3 x 8	0.7 to 0.9
ø63, ø80	M4 x 8	0.9 to 1.1
ø100, ø125	M5 x 10	2.3 to 2.7

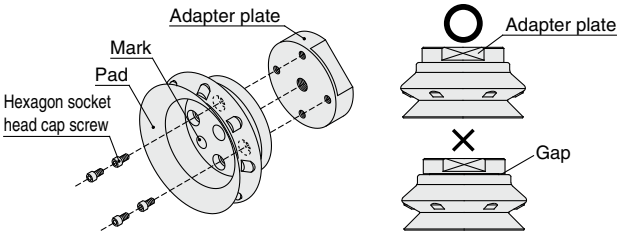

◉Can restrict the reduction of vacuum pressure even when there is no workpiece

When multiple vacuum pads are operated by one vacuum generator, and some of them are not holding the workpiece, the reduction of vacuum pressure is restricted and the workpiece can remain held by the rest of pads.

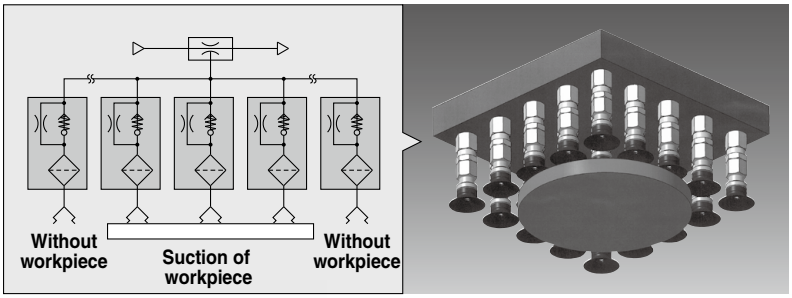

With One-touch fitting type available!



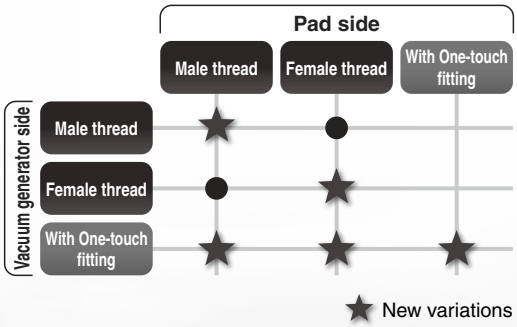

◉A switching operation is not required when changing workpieces.

When the workpieces have different shapes, the control circuit can be simplified.

Use of ZP2V

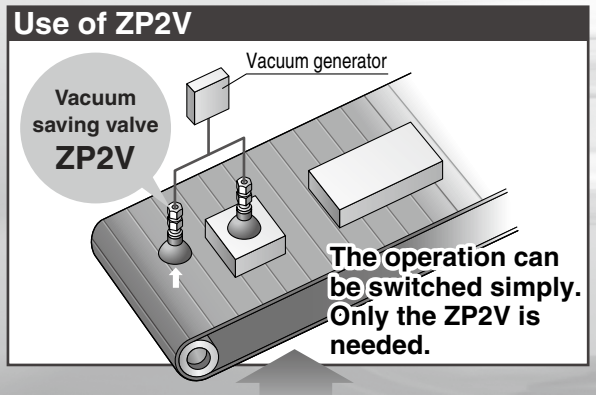

Existing way

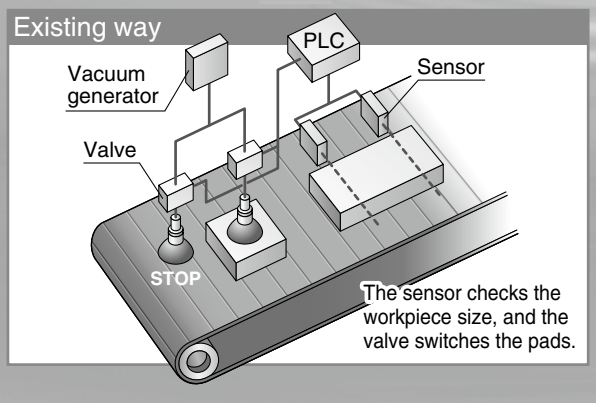

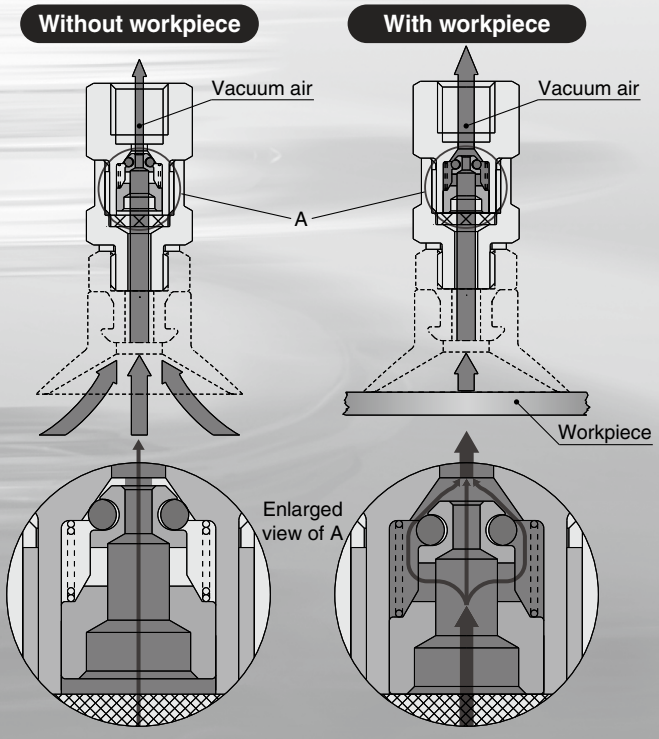

Valve closed
The valve is closed by the flow of vacuum air.

Valve open
The suction flow reduces, and the valve is open by the spring force.

ZP2V Series
Model Selection

Calculate the number of vacuum saving valves that can be used with one vacuum generator.

Selection Conditions

Workpiece: No leakage and several sizes
Required vacuum pressure: –50 kPa or more of vacuum pressure per vacuum pad
Part number of vacuum saving valve used: ZP2V-A8-05
(Connection thread size for pad side: M8, Fixed orifice size: ø0.5)

Chart 1. Flow Rate Characteristics of Vacuum Generator

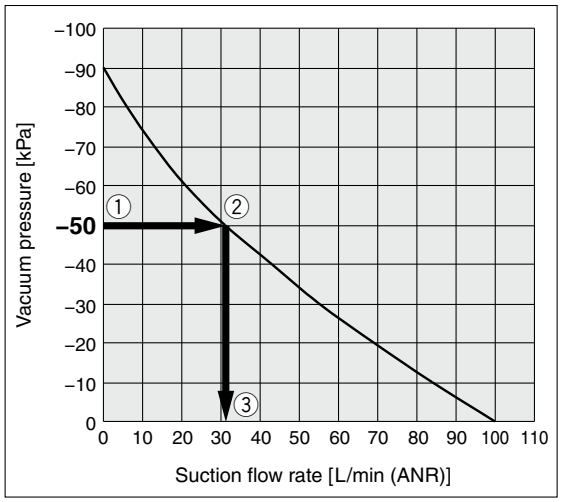

1 Check the flow rate characteristics of the vacuum generator used.

From the flow rate characteristics of the vacuum generator (**Chart 1**), calculate **the suction flow rate of the vacuum generator (Q1)** from the required vacuum pressure.

Vacuum pressure – 50 kPa (① → ② → ③) =
Suction flow rate (Q1) ≈ 31 L/min (ANR).

2 Calculate the number of vacuum saving valves (N).

Find the **minimum operating flow rate (Q2)** and **the suction flow rate of the vacuum generator (Q1)** in the specifications on page 346, and calculate **the number of vacuum saving valves (N)** that can be used with one vacuum generator.

$$\text{Number of vacuum saving valves (N)} = \frac{\text{Suction flow rate of the vacuum generator (Q1)}}{\text{Minimum operating flow rate (Q2)}}$$

Example) Vacuum saving valve used: **ZP2V-A8-05**
From **Table 1**, **Q2** can be calculated as **5.0 L/min (ANR)**.

$$N = \frac{31\{\text{L/min(ANR)}\}}{5\{\text{L/min(ANR)}\}} \approx 6 \text{ (unit)}$$

Chart 2. Selection Example by Min. Operating Flow Rate

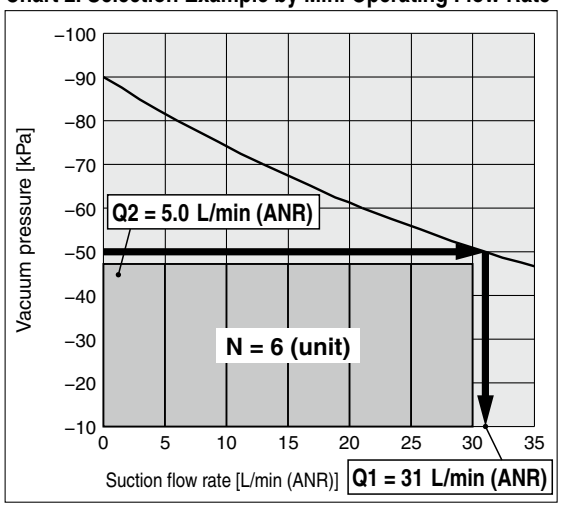

Table 1. Relationship between Minimum Operating Flow Rate and Fixed Orifice Size

Connection thread size for pad side	**M8**
Fixed orifice size [mm]	0.5
Minimum operating flow rate [L/min (ANR)] Q2	5.0

The above selection example is based on a general method under the given selection conditions, and may not always be applicable.
For vacuum piping, select equipment and piping so that the “Minimum operating flow rate” in the specifications on page 346 is satisfied.
A final decision on operating conditions should be made based on test results performed at the responsibility of the customer.

Vacuum Saving Valve
ZP2V Series



How to Order

ZP2V – A5 – 03

Connection size (Pad side/Vacuum generator side)

Male thread/Female thread

Symbol	Pad side	Vacuum generator side	Applicable fixed orifice size				Vacuum generator side
	Male thread	Female thread	0.3	0.5	0.7	1.0	Female thread
A5	M5 x 0.8		○	○	○	—	
A8	M8 x 1.25		—	○	○	○	
A01	R1/8	Rc1/8	—	○	○	○	
AG1	G1/8		—	○	○	○	Male thread
AN1	NPT1/8		—	○	○	○	**Pad side**

Female thread/Male thread

Symbol	Pad side	Vacuum generator side	Applicable fixed orifice size				Vacuum generator side
	Female thread	Male thread	0.3	0.5	0.7	1.0	Male thread
B5	M5 x 0.8		○	○	○	—	
B6	M6 x 1		○	○	○	—	
B01	Rc1/8	R1/8	—	○	○	○	
BG1	G1/8		—	○	○	○	Female thread
BN1	NPT1/8		—	○	○	○	**Pad side**

Male thread/Male thread

Symbol	Pad side	Vacuum generator side	Applicable fixed orifice size				Vacuum generator side
	Male thread	Male thread	0.3	0.5	0.7	1.0	Male thread
A5A5	M5 x 0.8		○	○	○	—	
A01A01	R1/8		—	○	○	○	
AG1AG1	G1/8		—	○	○	○	Male thread
							Pad side

Female thread/Female thread

Symbol	Pad side	Vacuum generator side	Applicable fixed orifice size				Vacuum generator side
	Female thread	Female thread	0.3	0.5	0.7	1.0	Female thread
B5B5	M5 x 0.8		○	○	○	—	
B01B01	Rc1/8		—	○	○	○	
BG1BG1	G1/8		—	○	○	○	Female thread
							Pad side

Fixed orifice size

Symbol	Fixed orifice size [mm]
03	0.3
05	0.5
07	0.7
10	1.0

Male thread/One-touch fitting

Symbol	Pad side	Vacuum generator side	Applicable fixed orifice size				Vacuum generator side
	Male thread	One-touch fitting	0.3	0.5	0.7	1.0	One-touch fitting
A5W4	M5 x 0.8	ø4	○	○	○	—	
A01W6	R1/8	ø6	—	○	○	○	
AG1W6	G1/8	ø6	—	○	○	○	Male thread
							Pad side

Female thread/One-touch fitting

Symbol	Pad side	Vacuum generator side	Applicable fixed orifice size				Vacuum generator side
	Female thread	One-touch fitting	0.3	0.5	0.7	1.0	One-touch fitting
B5W4	M5 x 0.8	ø4	○	○	○	—	
B01W6	Rc1/8	ø6	—	○	○	○	
BG1W6	G1/8	ø6	—	○	○	○	Female thread
							Pad side

One-touch fitting/One-touch fitting

Symbol	Pad side	Vacuum generator side	Applicable fixed orifice size				Vacuum generator side
	One-touch fitting	One-touch fitting	0.3	0.5	0.7	1.0	One-touch fitting
W4	ø4		○	○	○	—	
W6	ø6		—	○	○	○	
							One-touch fitting
							Pad side

Specifications

Connection size for pad side		M5, M6, ø4			M8, R1/8, Rc1/8, G1/8, NPT1/8, ø6		
Fixed orifice size [mm]		0.3	0.5	0.7	0.5	0.7	1.0
Effective area	When the valve is operating [mm²]	0.07	0.19	0.38	0.19	0.38	0.78
	When the valve is not operating [mm²]	1.64	1.76	1.95	1.76	2.64	3.04
Fluid		Air					
Max. operating pressure range [MPa]		0 to 0.7					
Max. operating vacuum pressure range [kPa]		0 to –100					
Ambient and fluid temperatures [°C]		5 to 60 (No freezing)					
Element nominal filtration rating [μm]		40					
Min. operating flow rate [L/min (ANR)]		3	5	8	5	8	16

Working Principle

	Initial condition	When a workpiece is adsorbed		When a workpiece is released
		Without workpiece	With workpiece	
Air flow	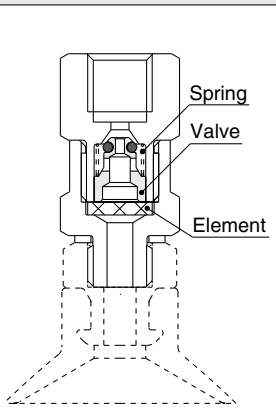	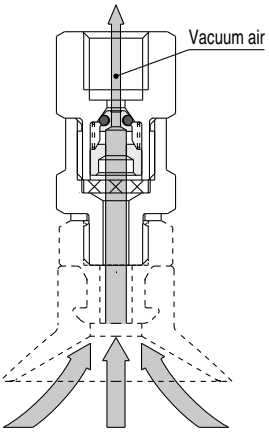	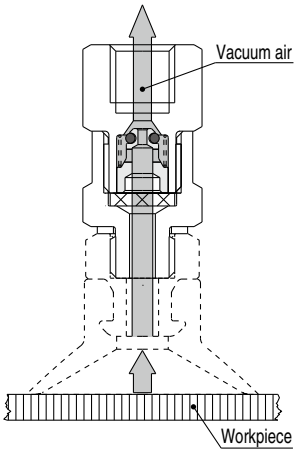	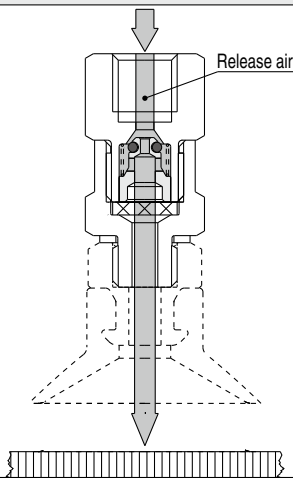
Valve operating condition	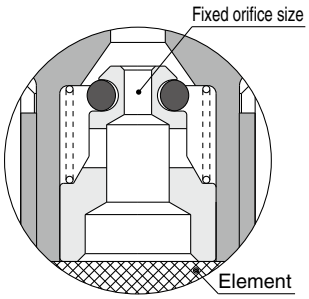	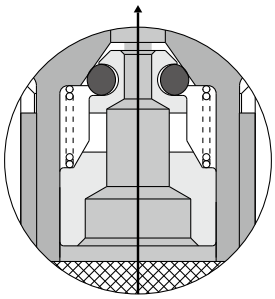	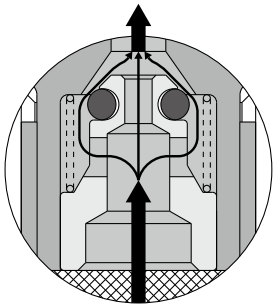	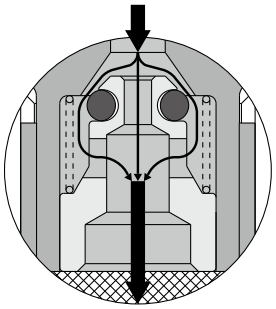
	Since there is no air flow, the valve remains open by the spring force.	**Valve closed** When the workpiece is separated from the vacuum pad, the valve is closed by the air flow, and the suction air can only flow through the fixed orifice. At this time, an amount of air corresponding to the fixed orifice size is sucked.	**Valve open** When the workpiece is adsorbed by the vacuum pad, the suction flow reduces, and the valve is open by the spring force, which opens the path between the valve and the body for suction.	**Valve open** When the workpiece is released, the valve is open by the vacuum release air, and the path between the valve and the body will open.

Construction

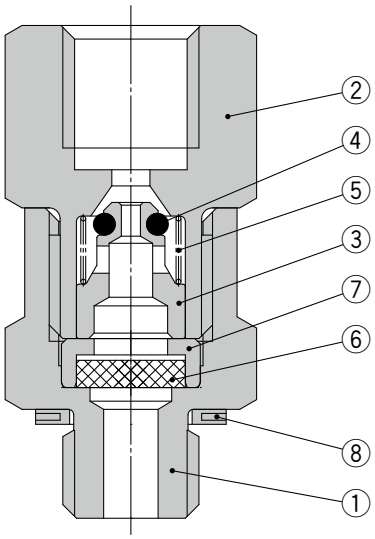

Pad side

Vacuum generator side

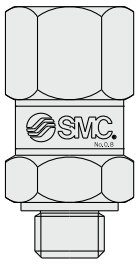

Pad side

* For the mounting direction of the product, refer to page 352.

Component Parts

No.	Description	Material	Surface treatment
1	**Body A**	Brass	Electroless nickel plating
2	**Body B**	Brass	Electroless nickel plating
3	**Valve**	Aluminum	—
4	**O-ring**	HNBR	—
5	**Spring**	Stainless steel	—
6	**Element**	CAC403 equivalent	—
7	**Ring**	Aluminum	—
8	**Gasket**	NBR + Stainless steel	—

Dimensions



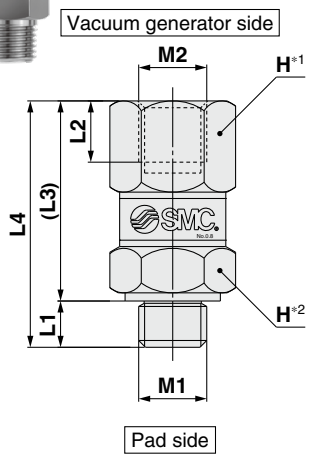

ZP2V-A5-□
ZP2V-A8-□

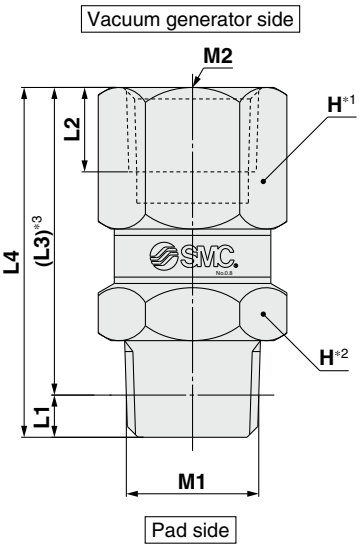

ZP2V-A01-□
ZP2V-AN1-□

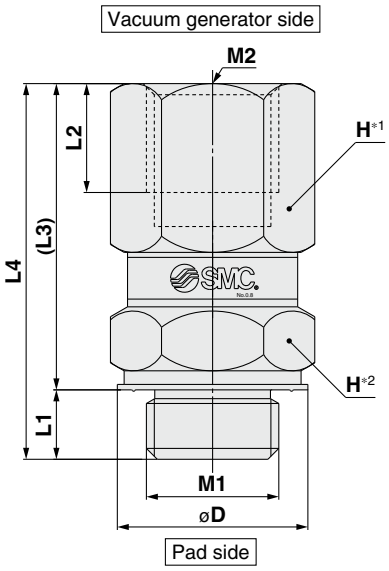

ZP2V-AG1-□



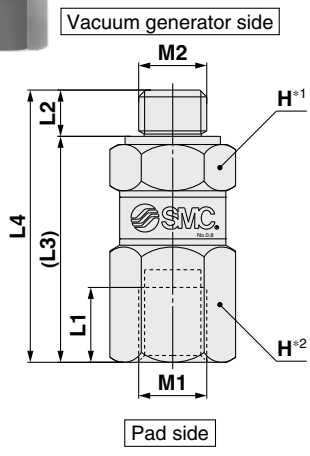

ZP2V-B5-□
ZP2V-B6-□

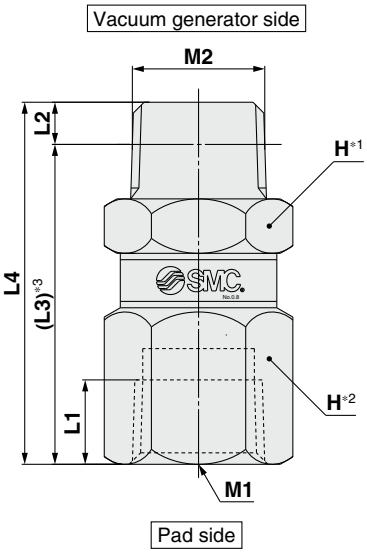

ZP2V-B01-□
ZP2V-BN1-□

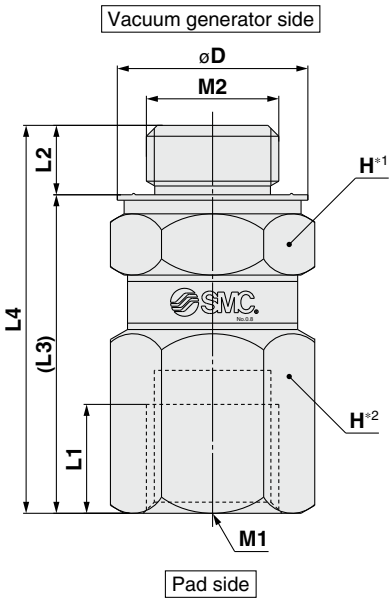

ZP2V-BG1-□

∗1 The place at the vacuum generator side where the tool is used
∗2 The place at the pad side where the tool is used
∗3 The reference dimension after the R or NPT thread is screwed

[mm]

Model	M1	M2	L1	L2	L3	L4	H (Width across flats)	øD	W [g]	Tightening torque [N·m]∗1
ZP2V-A5-□	M5 x 0.8	M5 x 0.8	3.4	4.5	14.7	18.1	8	—	6	1.0 to 1.5
ZP2V-A8-□	M8 x 1.25	M8 x 1.25	5.9	8	20.1	26	12	—	18	5.5 to 6.0
ZP2V-A01-□	R1/8	Rc1/8	3.1	6.2	22.6	25.7	12	—	18	7.0 to 9.0
ZP2V-AG1-□	G1/8	G1/8	5.1	8	22.5	27.6	13	14	23	5.5 to 6.0
ZP2V-AN1-□	NPT1/8	NPT1/8	3.2	6.9	23.3	26.5	12	—	19	7.0 to 9.0
ZP2V-B5-□	M5 x 0.8	M5 x 0.8	5.5	3.4	16.6	20	8	—	7	1.0 to 1.5
ZP2V-B6-□	M6 x 1	M6 x 1	5	4.5	16.2	21.5	8	—	7	2.0 to 2.5
ZP2V-B01-□	Rc1/8	R1/8	6.2	3.1	23.5	27.1	12	—	19	7.0 to 9.0
ZP2V-BG1-□	G1/8	G1/8	8	5.1	23.4	29.0	13	14	24	5.5 to 6.0
ZP2V-BN1-□	NPT1/8	NPT1/8	6.9	3.2	24.2	27.9	12	—	19	7.0 to 9.0

∗1 When mounting and/or removing the product, use a wrench or torque wrench in the place shown in the figures.
When mounting the product, tighten to the torque specified in the table.

Dimensions



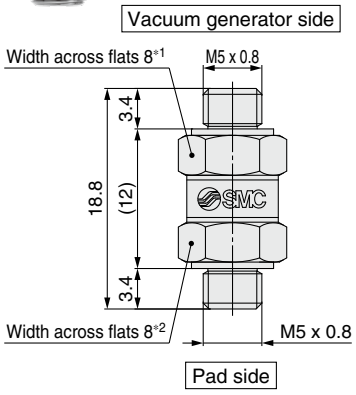

ZP2V-A5A5-□

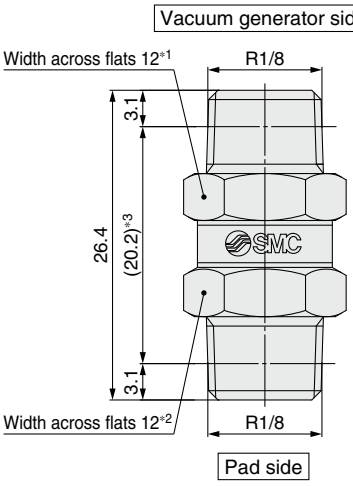

ZP2V-A01A01-□

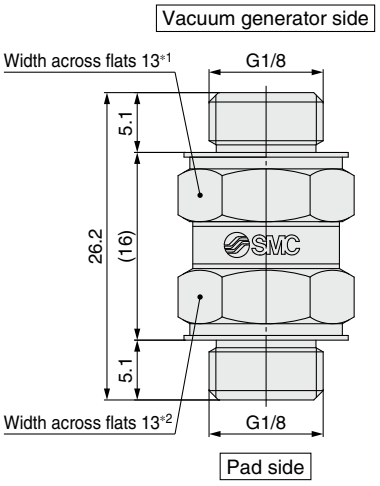

ZP2V-AG1AG1-□



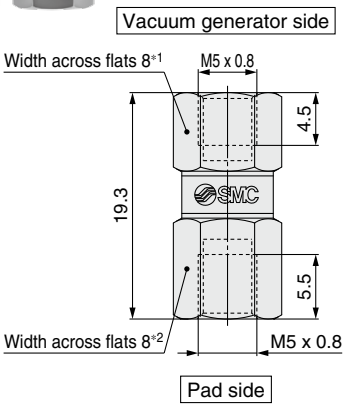

ZP2V-B5B5-□

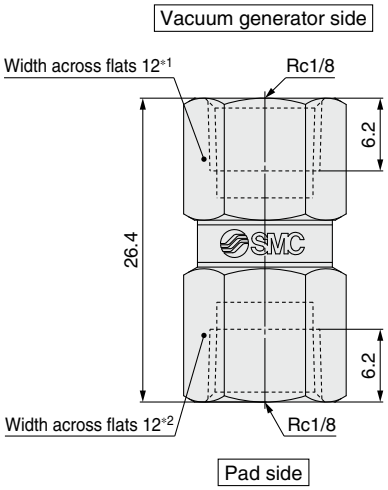

ZP2V-B01B01-□

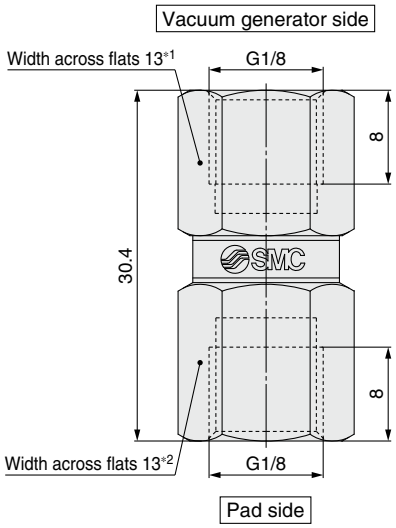

ZP2V-BG1BG1-□

[mm]

Model	Connection thread size		W [g]	Tightening torque [N·m] *1
	Pad side	Vacuum generator side		
ZP2V-A5A5-□	M5 x 0.8	M5 x 0.8	6	1.0 to 1.5
ZP2V-A01A01-□	R1/8	R1/8	19	7.0 to 9.0
ZP2V-AG1AG1-□	G1/8	G1/8	22	5.5 to 6.0
ZP2V-B5B5-□	M5 x 0.8	M5 x 0.8	7	1.0 to 1.5
ZP2V-B01B01-□	Rc1/8	Rc1/8	17	7.0 to 9.0
ZP2V-BG1BG1-□	G1/8	G1/8	24	5.5 to 6.0

*1 When mounting and/or removing the product, use a wrench or torque wrench in the place shown in the figures.
When mounting the product, tighten to the torque specified in the table.

*1 The place at the vacuum generator side where the tool is used
*2 The place at the pad side where the tool is used
*3 The reference dimension after the R thread is screwed

Dimensions



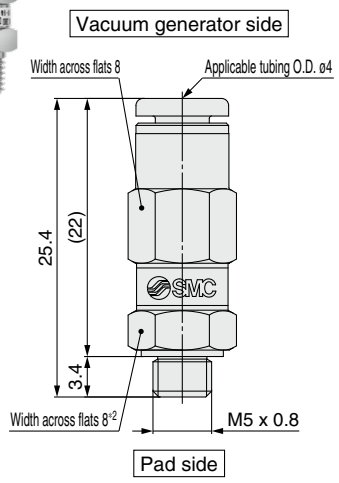

ZP2V-A5W4-□

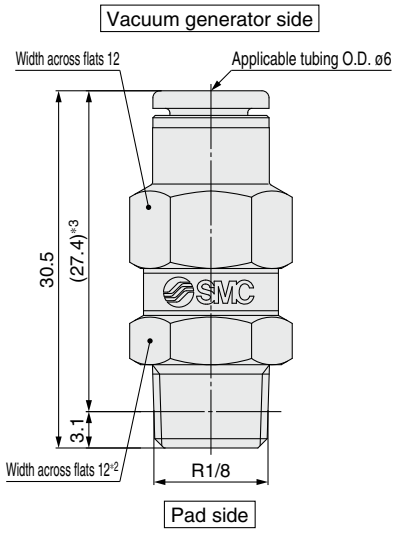

ZP2V-A01W6-□

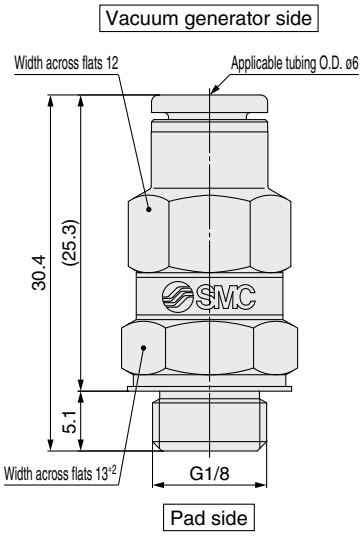

ZP2V-AG1W6-□



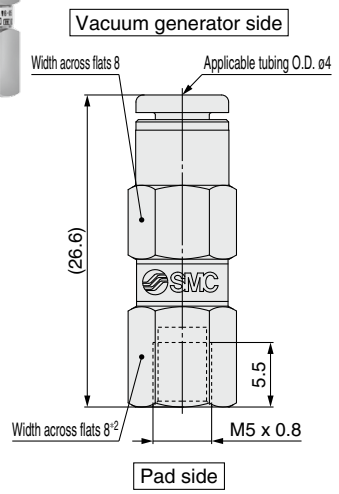

ZP2V-B5W4-□

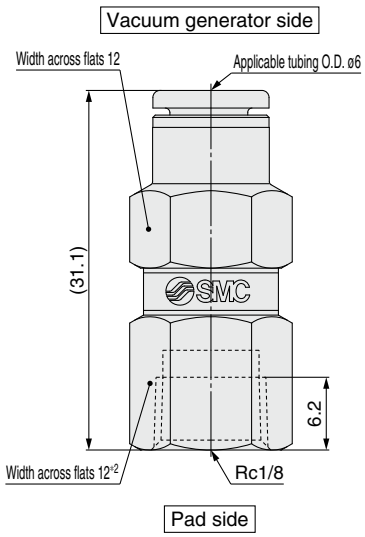

ZP2V-B01W6-□

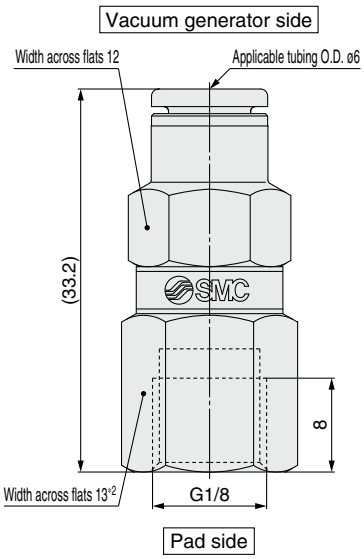

ZP2V-BG1W6-□

[mm]

Model	Connection thread size		W [g]	Tightening torque [N·m] *1
	Pad side	Vacuum generator side		
ZP2V-A5W4-□	M5 x 0.8	ø4	6	1.0 to 1.5
ZP2V-A01W6-□	R1/8	ø6	18	7.0 to 9.0
ZP2V-AG1W6-□	G1/8	ø6	20	5.5 to 6.0
ZP2V-B5W4-□	M5 x 0.8	ø4	7	1.0 to 1.5
ZP2V-B01W6-□	Rc1/8	ø6	17	7.0 to 9.0
ZP2V-BG1W6-□	G1/8	ø6	21	5.5 to 6.0

*1 When mounting and/or removing the product, use a wrench or torque wrench in the place shown in the figures.
When mounting the product, tighten to the torque specified in the table.

*1 The place at the vacuum generator side where the tool is used
*2 The place at the pad side where the tool is used
*3 The reference dimension after the R thread is screwed

Dimensions



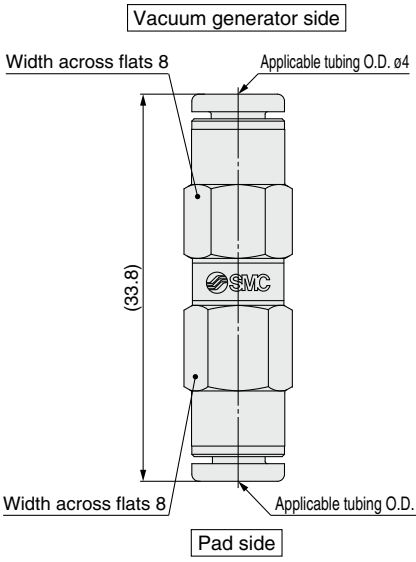

ZP2V-W4-□

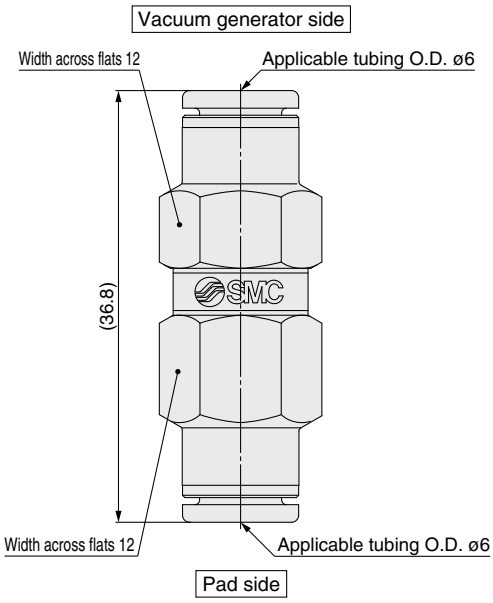

ZP2V-W6-□

[mm]

Model	Connection thread size		**W**
	Pad side	Vacuum generator side	[g]
ZP2V-W4-□	ø4	ø4	7
ZP2V-W6-□	ø6	ø6	19

ZP2V Series
Specific Product Precautions

Be sure to read this before handling the products.
Refer to page 375 for safety instructions. For vacuum equipment and vacuum pad precautions, refer to pages 376 to 379.

1. The product is not equipped with a vacuum holding function and cannot be used for the purpose of holding vacuum.

2. Determine the number of products to be used, and keep the recommended pad diameter per product as shown in Table 1. Also, sufficiently check the operation with the actual equipment beforehand.

Table 1. Recommended Pad Diameter per Product

Connection thread symbol for pad side	A5	B5	W4	A8	A01	B01	AG1	BG1	AN1	BN1	W6
Thread size	M5		—	M8	R1/8	Rc1/8	G1/8		NPT1/8		—
Recommended pad diameter [mm]	25 or less			32 to 50							

3. Do not disassemble the product. Once the product has been disassembled and reassembled, it will no longer be able to satisfy the original specifications.

4. When piping, do not get the pad side and vacuum generator side of the product mixed up. (Refer to Fig. 1.)

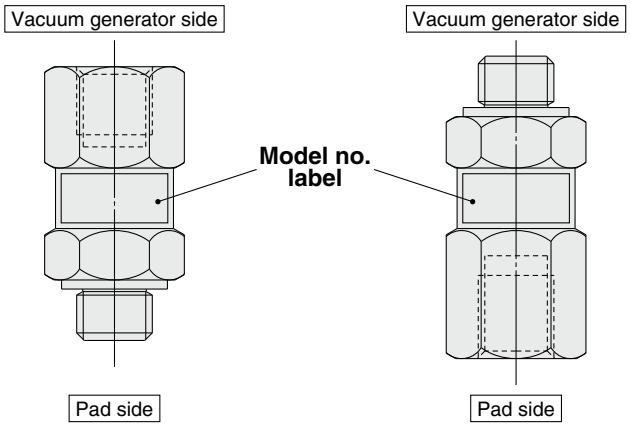

Fig. 1. Mounting direction

Enlarged view of model number label

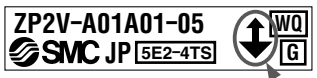

Flow indication symbol on body

Flow Indication Symbol on Body

Indication symbol	Symbol
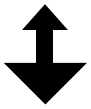	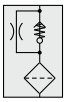

5. For mounting and/or removing the product, strictly follow the instructions below.

When mounting and/or removing the product, use the tool in the specified places shown on pages 348 to 350. Also, when mounting the product, tighten to the specified torque shown on pages 348 to 350. Applying excessive torque or using a tool in places other than those specified can cause damage or decreased performance.

6. The reduction of vacuum pressure while the workpiece is adsorbed and released depends on the flow rate characteristics of the vacuum generator. Check the flow rate characteristics of the vacuum generator before checking the operation with the actual equipment.

7. When the built-in element of the product gets clogged, replace the whole product.

8. When verifying the suction using a pressure sensor, etc., sufficiently check the operation with the actual equipment beforehand.

9. If there is leakage between the pad and a workpiece, for example, if the workpiece is permeable, fewer products can be used with one vacuum generator.

Take the leakage between the pad and workpiece into account and sufficiently check the operation with the actual equipment beforehand.

10. Any mounting direction is available for this product. (Vertical or lateral mounting is also available.)

11. For vacuum piping, select equipment and piping so that the "Minimum operating flow rate" in the specifications on page 346 is satisfied.

Make sure that there are no unnecessary restrictions, leaks, etc., along the course of the piping.
If the minimum operating flow rate listed in the specifications is not satisfied, operation will be unstable, which may lead to suction failure or cause damage to internal parts.

Non-contact Gripper *XT661 Series*

- **Assists in non-contact workpiece transfer**
- **Max workpiece suction distance: 10 mm**[*1]

*1 Refer to "Lifting Force–Distance from the Workpiece" on pages 364 to 366.

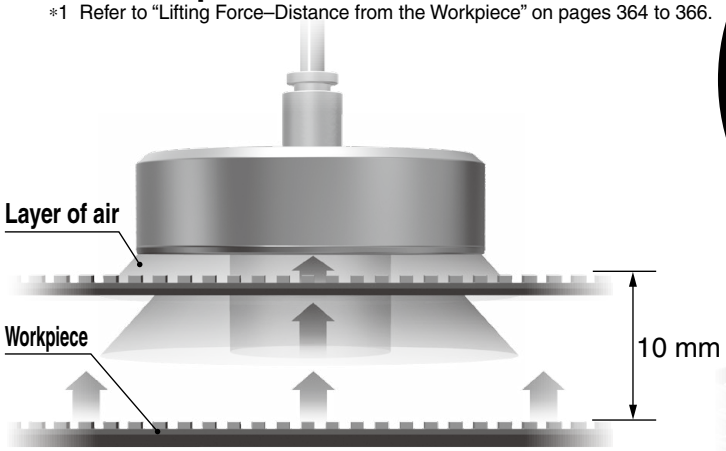

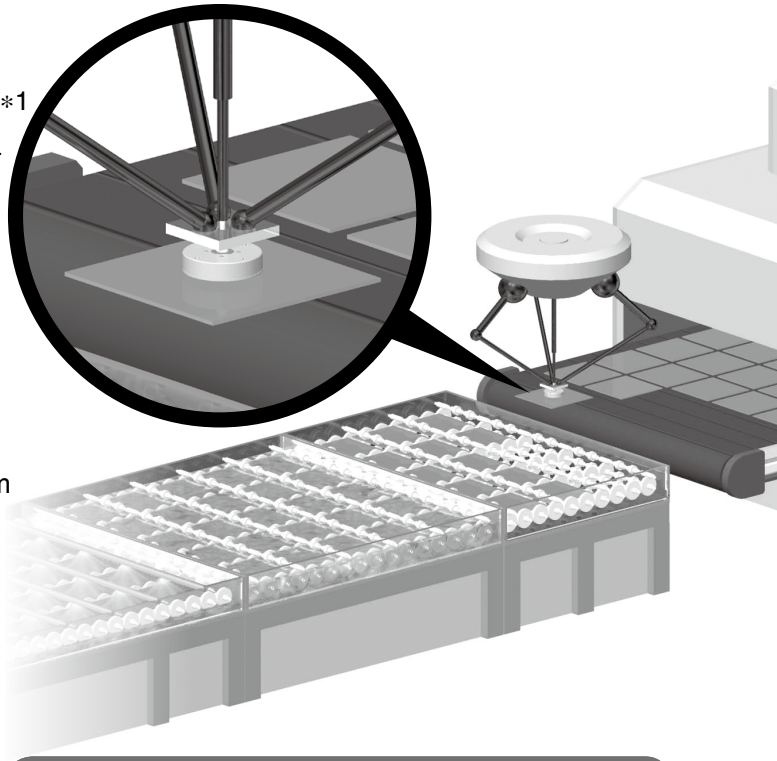

Since there is a layer of air between the workpiece and gripper, non-contact suction is possible.

● Two types are available.

■ Cyclone Type

High lift

- **High lifting force: Max. 44 N**[*1]

*1 Outer body diameter: ø100

Lifting force (Supply pressure: 0.4 MPa)

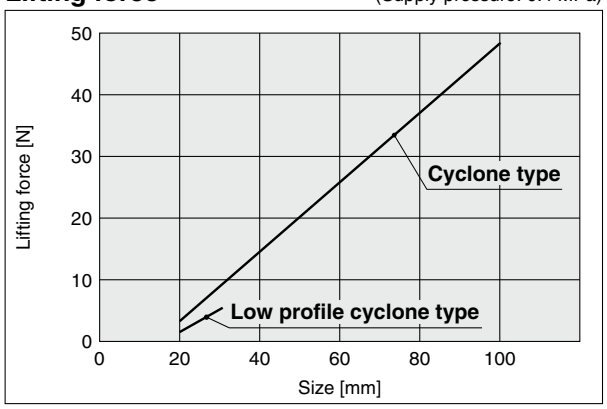

- **Totaled 5 size: ø20/ø40/ø60/ø80/ø100**

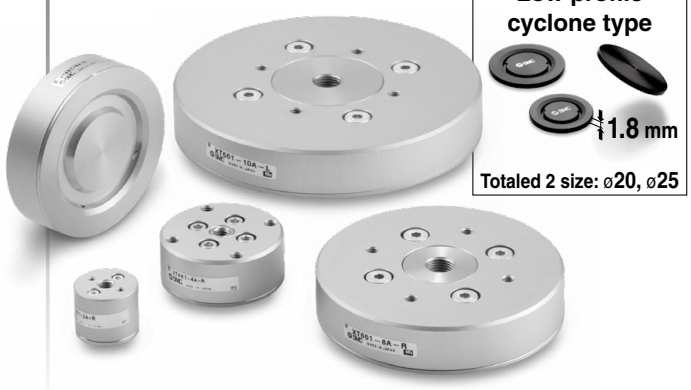

■ Bernoulli Type

Vibration reducing

- **Amplitude of the workpiece during gripping: ±0.01 mm**[*1, 2] **or less**

*1 Solar battery silicon cell (□125 mm, t = 250 μm)
*2 In SMC conditions (How to calculate: Page 356)

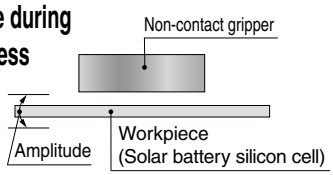

Vibration (Supply pressure: 0.1 MPa)

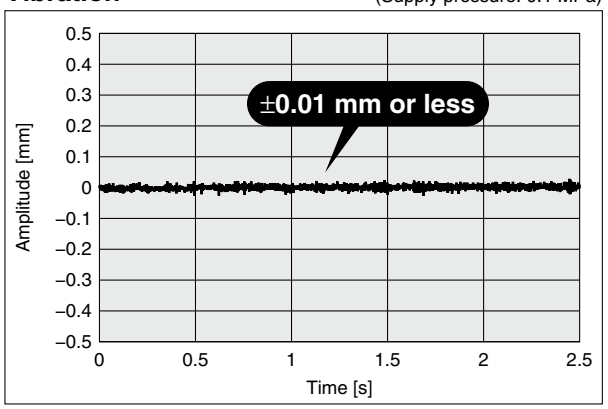

- **Totaled 6 size: ø40/ø60/ø80/ø100/ □120/□150**



■ Cyclone Type

High lift **Low air consumption** **Body material: Al**

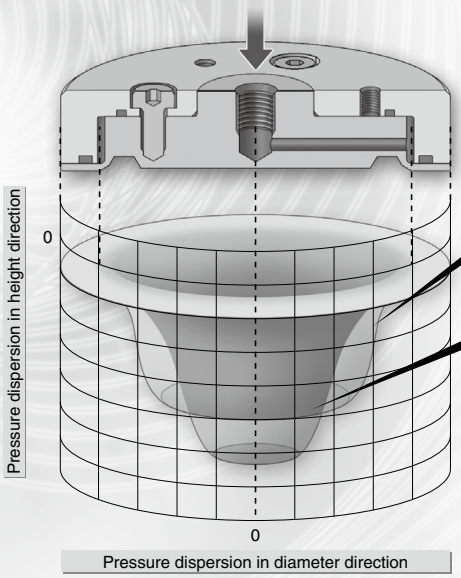

Non-contact gripper
Large vacuum area, even pressure dispersion

Existing SMC cyclone method
Small vacuum area, higher vacuum in the central part

Original groove-channel design allows cyclone effect with large suction area and even pressure dispersion!



Outer body diameter [mm]	ø20	ø40	ø60	ø80	ø100
Air consumption [L/min (ANR)]	77	148	148	148	258
Lifting force [N]	4.3	14	21	26	44

Supply pressure: 0.4 MPa

Working Principle — Air is discharged in the whirling direction.



● Cyclone Type

Air from the supply port is blown off from the nozzle on the concave suction surface side, creating a whirlwind flow. The whirlwind flow is discharged to the atmosphere from the gap between the non-contact gripper and the workpiece.
As a result, a vacuum zone is created inside the spiral flow due to the cyclone effect, enabling the workpiece to be lifted without physical contact. The action of the centrifugal force of the spiral flow allows a greater lifting force to be generated.

● Various workpiece suction methods are available.

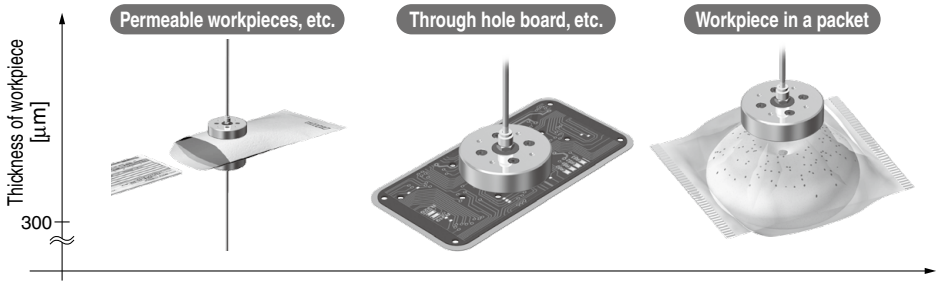

● Grease-free

● Can be disassembled and cleaned the inside

● Made to order

With urethane pad*1 (-X207)

- Mitigation of impacts and prevention of damage during lifting
- No need to install a guide

*1 Except ø20

Refer to page 361.

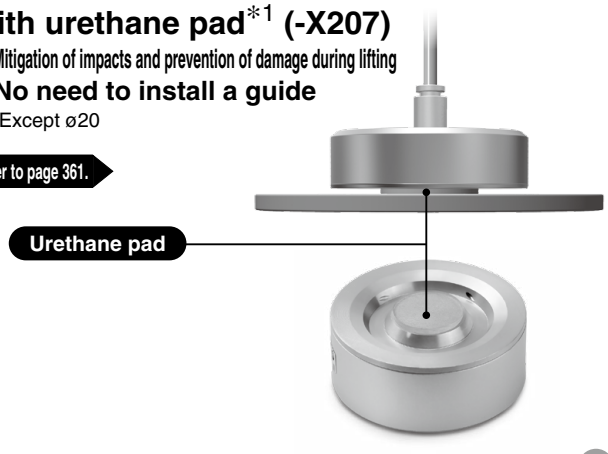

With multi-port (-X211)

The presence of a workpiece can be checked by installing a sensor.

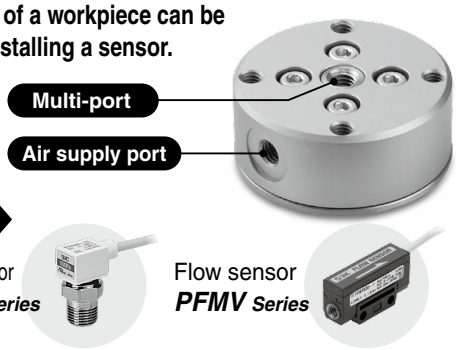

For the method of selecting and using a sensor, refer to the operation manual.

■ Low Profile Cyclone Type (-X260)

Low profile **Made to order**

Thickness: 1.8 mm

Weight: Approx. 1.3 g∗1

∗1 Outer body diameter: ø20



Outer body diameter [mm]	ø20	ø25
Air consumption [L/min (ANR)]	31	31
Lifting force [N]	1.4	2

Supply pressure: 0.4 MPa

- **Can be mounted on the end of the robot arm**
- **Two sizes (ø20 and ø25) are available.**

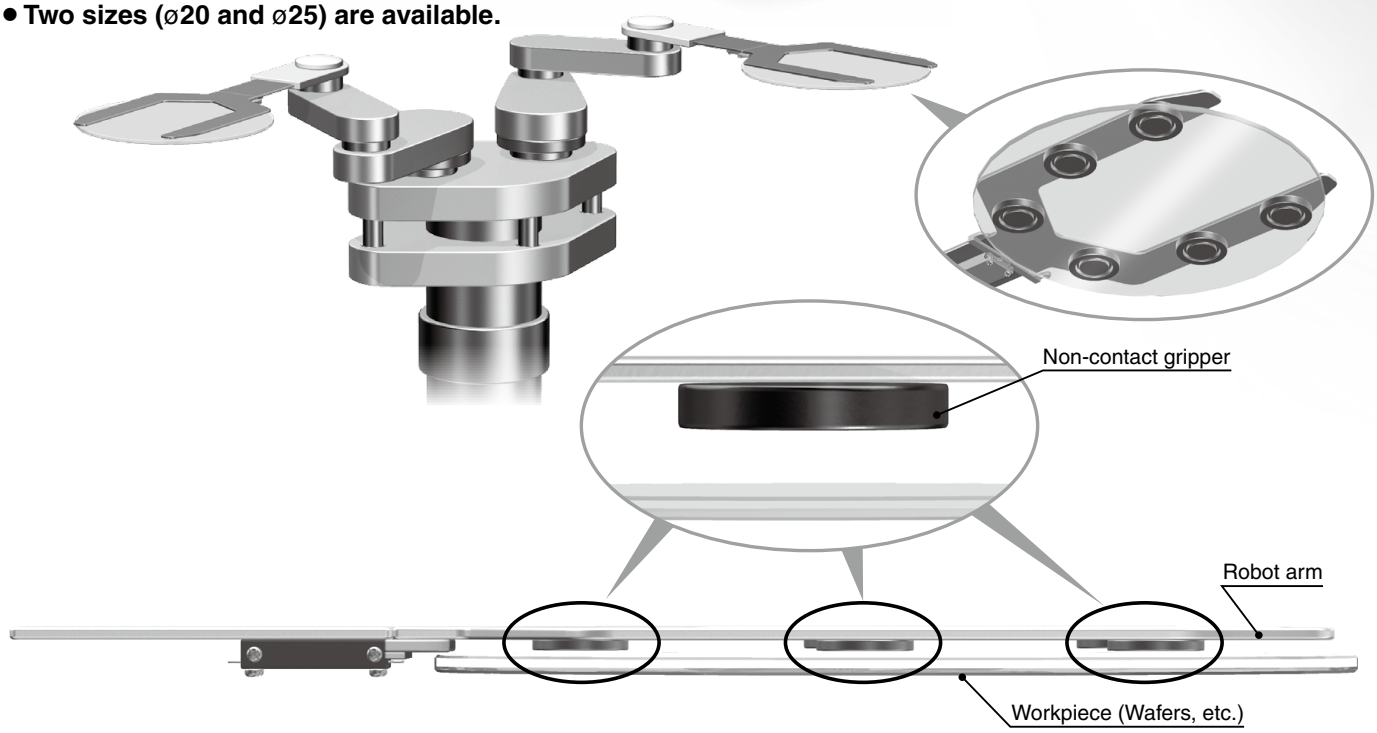

● Mounting

Apply adhesive to the surface on the air supply port side of the non-contact gripper, and mount the gripper on the equipment.
(Be careful that the adhesive does not obstruct the air supply port.)

■ Bernoulli Type

Vibration reducing type **Body material: Resin**

Original groove-channel design allows the Bernoulli effect with

suppressing the amplitude of the workpiece during gripping!

● Reduced amplitude of the workpiece

Size: □120

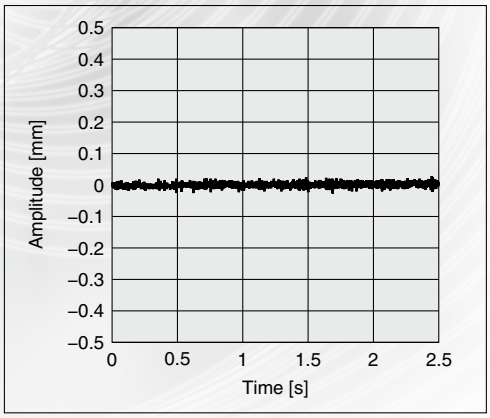

Size: ø100

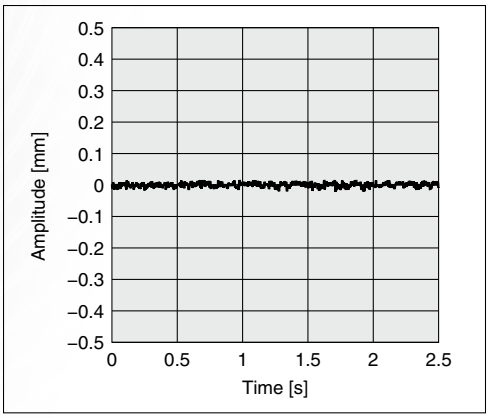

How to calculate

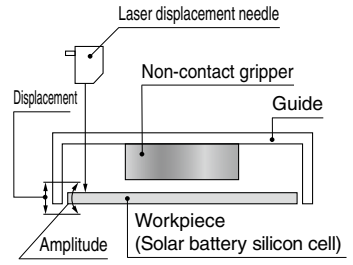

<Conditions> Solar battery silicon cell
□125 mm Thickness: 250 μm
Supply pressure: 0.1 MPa





Outer body diameter [mm]	ø40	ø60	ø80	ø100	□120	□150
Air consumption [L/min (ANR)]	98	98	98	156	291	291
Lifting force [N]	2.2	4.1	5.1	7.8	17	14

Supply pressure: 0.4 MPa

Working Principle — Air is discharged radially.

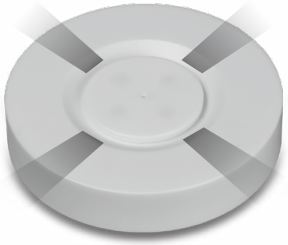

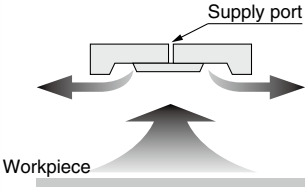

● Bernoulli Type

Air from the supply port is blown off radially from the nozzle on the convex suction surface side.
The radial flow is discharged to the atmosphere from the gap between the non-contact gripper and the workpiece, and the air between the non-contact gripper and the workpiece is pulled in the peripheral direction. As a result, a vacuum zone is generated in the center, enabling the workpiece to be lifted without physical contact.
Also, the original groove-channel design allows the air to be discharged radially, thus suppressing ripples caused by pulsations and whirlwind flow, and enabling the amplitude of the workpiece to be minimized.

● Various workpiece suction methods are available.

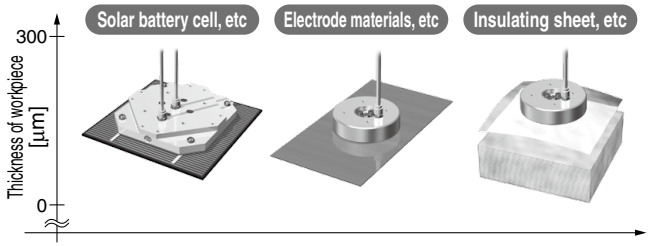

● Reduction of rotation load ∗ No directionality of whirlwind air

● Standardization of multi-port*1 ∗1 Except ø40

● Grease-free

● Can be disassembled and cleaned the inside

Related Products

General Air

Mist Separator → **AM** (Filtration degree: 0.3 μm)

Regulator → **AR** **ARM10**

2-Port Valve → **VXZ** **VQ20**

Oil-free Air

Membrane Air Dryer → **IDG**

Super Mist Separator → **AME** (Filtration degree: 0.01 μm)

Odor Removal Filter → **AMF** (Filtration degree: 0.01 μm)

Regulator → **AR-X2400** (Oil-free) **ARM10** (Oil-free)

2-Port Valve → **VXZ** (Other option/Oil-free) **VQ2-X2** (Oil-free)

Clean Air



Clean room production
Parts washed
Double packing/Shipping

For details, refer to the Pneumatic Clean Series catalog (CAT. E02-23) or the **Web Catalog**.

https://www.smcworld.com

Clean Regulator → **SRH**

2-Port Valve → **LVA**

Clean Air Filter → **SFD** **SF**

Clean Air Module → **LLB** Modularizes the flow switch, regulator, pressure switch, 2-port valve and filter. (Filtration degree: 0.01 μm)



XT661 Series
Model Selection

Selection Procedure

1 Check the workpiece and operating conditions.

1) Check the kind of workpiece and also its size and weight.
2) Check the guide corresponding to the transfer method of the workpiece and "Selection" (Page 360).
   At the same time, check the distance between the workpiece to be set and the non-contact gripper.
3) Check the supply pressure applied to the non-contact gripper.

2 Check the lifting force.

1) Clarify the lifting force corresponding to the distance between the workpiece and the non-contact gripper for each supply pressure.

<How to read the graph>

Example: For the case of "Cyclone type ø**60**," a supply pressure of **0.2 MPa**, a workpiece mass of **50 g (0.49 N)**, and a **1 mm** distance between the workpiece and the non-contact gripper

<Checking procedure>

From the "Cyclone type ø**60**" graph, check the lifting force from the intersection of a **1 mm** distance between the workpiece and non-contact gripper and a supply pressure of **0.2 MPa**. Then, extend a horizontal line from this point to the vertical axis to obtain the lifting force.

[Cyclone type ø60]

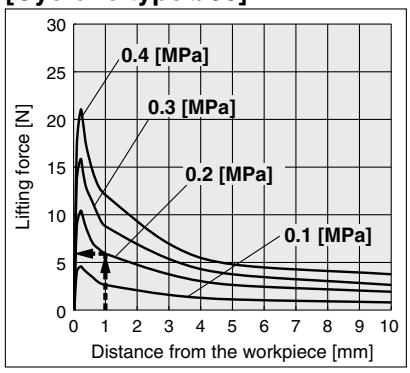

2) Multiply the final lifting force by a safety factor and decide the temporary lifting force. Obtain the temporary lifting force by using the following equation. (Note: The temporary lifting force is the lifting force that has been set after taking into account the safety factor used for selecting a non-contact gripper.)

F = f x (1/t) **F: Temporary lifting force [N] f: Lifting force [N] t: Safety factor ··· 2 or more**

3) Compare the final lifting force and workpiece mass, and determine the size and number of non-contact grippers such that **the temporary lifting force** ≥ **workpiece mass**.

<Checking procedure>

If **the temporary lifting force** ≥ **workpiece mass**, the gripper can be used under these conditions.
If **the temporary lifting force** < **workpiece mass**, either increase the size of the non-contact gripper, or increase the number of grippers to be used.
Obtain the required number of grippers from the following equation.

N = (9.8 x W/1000)/(F) ··· Rounding up to the nearest higher integer **N: Q'ty (pcs.) W: Workpiece mass [g] F: Temporary lifting force [N] 9.8: Gravitational acceleration [m/s^2]**

3 Determine the layout of the non-contact grippers.

<Checking procedure>

Determine the positions of the non-contact grippers according to the number of grippers to be used, taking into account the balance of the workpiece.

If the balance of the workpiece is poor during lifting, either increase the size of the non-contact gripper, or increase the number of grippers to be used.

* The above shows selection procedures for general non-contact grippers; thus, they will not be applicable for all grippers. Customers are required to conduct a test on their own and to select the size of the non-contact grippers and the non-contact grippers to be used based on the test results.

Selection Examples of Non-contact Gripper

Selection example 1 For small workpiece

- **Workpiece size: □100 x Plate thickness 3 mm**
- **Workpiece mass: 300 g**
- **Distance from the workpiece: 1 mm**
- **Supply pressure: 0.2 MPa**

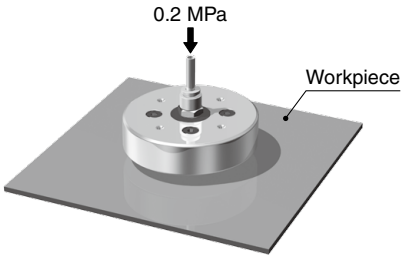

(1) Check the workpiece and operating conditions.

1) Workpiece size: **□100 x Plate thickness 3 mm**
   Workpiece mass: **300 g**
2) Guide: On the top of the workpiece by means of an external stopper
   Distance from the workpiece: **1 mm**
3) Supply pressure: **0.2 MPa**

(2) Check the lifting force.

1) From the graph (lifting force–distance from the workpiece), check the lifting force at a supply pressure of **0.2 MPa** and a **1 mm** distance between the workpiece and the non-contact gripper for each size.

   XT661-2A: 0.8 N XT661-4A: 3.8 N XT661-6A: 5.9 N
   XT661-8A: 7.5 N XT661-10A: 14.4 N

2) Calculate the temporary lifting force using a safety factor of **2**.

   XT661-2A: F = f x (1/t) = 0.8 x (1/2) = 0.4 N
   XT661-4A: F = f x (1/t) = 3.8 x (1/2) = 1.9 N
   XT661-6A: F = f x (1/t) = 5.9 x (1/2) = 2.95 N
   XT661-8A: F = f x (1/t) = 7.5 x (1/2) = 3.75 N
   XT661-10A: F = f x (1/t) = 14.4 x (1/2) = 7.2 N

3) Confirm the relationship "temporary lifting force ≥ workpiece mass".
   Convert the workpiece mass [g] into a force [N].

   300 g → 300 x 9.8/1000 = 2.94 N

   For a workpiece mass of **300 g (2.94 N)**

   XT661-6A: Temporary lifting force 2.95 N ≥ Workpiece mass 300 g (2.94 N)
   XT661-8A: Temporary lifting force 3.75 N ≥ Workpiece mass 300 g (2.94 N)
   XT661-10A: Temporary lifting force 7.2 N ≥ Workpiece mass 300 g (2.94 N)

In this case, the relationship "temporary lifting force ≥ workpiece mass" is obtained.
For this workpiece, select the **XT661-6A**.
The number of grippers to be used is **one**.

(3) Determine the layout of the non-contact grippers.

1) Install the grippers at the center of gravity (center) of the workpiece, and confirm that there is no problem with the balance of the workpiece during lifting.

Selection example 2 For large workpiece

- **Workpiece size: 2200 x 2500 x 0.7 mm**
- **Workpiece mass: 9.7 kg**
- **Distance from the workpiece: 0.8 mm**
- **Supply pressure: 0.3 MPa**

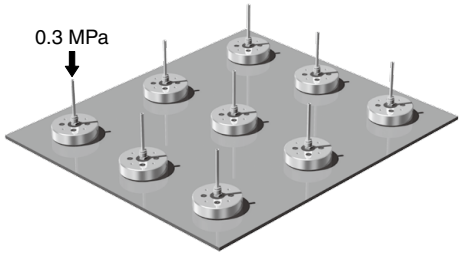

(1) Check the workpiece and operating conditions.

1) Workpiece size: **2200 x 2500 x 0.7 mm**
   Workpiece mass: **9700 g**
2) Guide: On the end of the workpiece
   Distance from the workpiece: **0.8 mm**
3) Supply pressure: **0.3 MPa**

(2) Check the lifting force.

1) From the graph (lifting force–distance from the workpiece), check the lifting force at a supply pressure of **0.3 MPa** and a **0.8 mm** distance between the workpiece and the non-contact gripper for each size.

   XT661-10A: 22.4 N

2) Calculate the temporary lifting force using a safety factor of **2**.

   XT661-10A: F = f x (1/t) = 22.4 x (1/2) = 11.2 N

3) Confirm the relationship "temporary lifting force ≥ workpiece mass".
   Convert the workpiece mass [g] into a force [N].

   9700 g → 9700 x 9.8/1000 = 95.06 N

   XT661-10A: Temporary lifting force 11.2 N < Workpiece mass 9700 g (95.06 N)

In this case, the relationship "temporarily lifting force ≥ workpiece mass" is not obtained, so multiple grippers must be used. Obtain the number of grippers to be used from the following equation.

N = (9.8 x W/1000)/(F) = (9.8 x 9700/1000)/(11.2) = 9
⋯ Rounding up to the nearest higher integer

For this workpiece, select the **XT661-10A**.
The number of grippers to be used is **nine**.

(3) Determine the layout of the non-contact grippers.

1) Adequately take into account the center of gravity and deflection of the workpiece, and then install nine non-contact grippers for a well-balanced hold.
   (∗ If a deflection occurs, the lifting force will decrease.)

Selection

Acceleration/Wind pressure/Impact

When transferring the workpiece, take into account not only the workpiece mass, but also acceleration, wind pressure and impact as well. (Refer to Fig. 1.) Particular care must be taken in the case of a flat plate that has a large area. It is necessary to adopt measures such as the installation of a wind pressure prevention cover. Also, even if the relationship **temporary lifting force ≥ workpiece mass** is adequate, select a larger size that provides a degree of margin. The stability of the lift with respect to acceleration, wind pressure and impact generally increases in proportional to the diameter.

Fig. 1

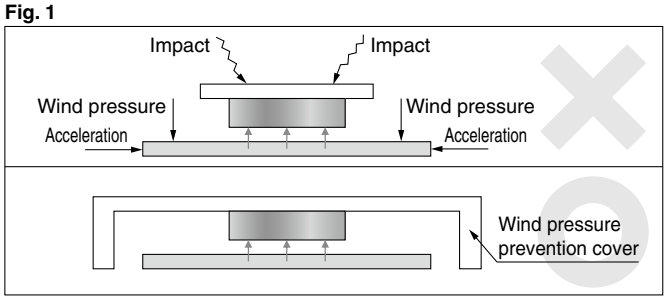

Horizontal force

A non-contact gripper does not produce a restraining force that prevents horizontal movement of the workpiece. It is necessary to install a guide at the end of the workpiece. (Refer to Fig. 2.)

Fig. 2

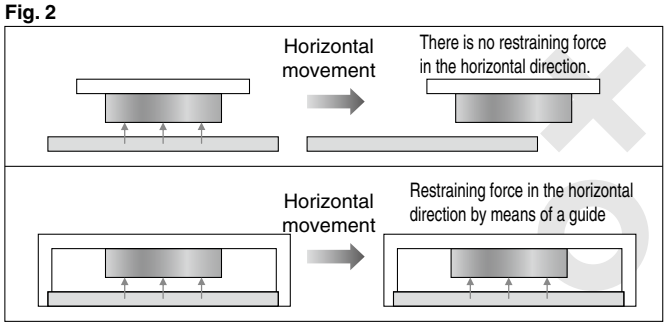

Size of the non-contact gripper and workpiece

Use a non-contact gripper that has an area of less than that of the workpiece. If the area of the gripper is greater than that of the workpiece, a vacuum zone will not occur, so a lifting force will not be generated. (Refer to Fig. 3.)

Fig. 3

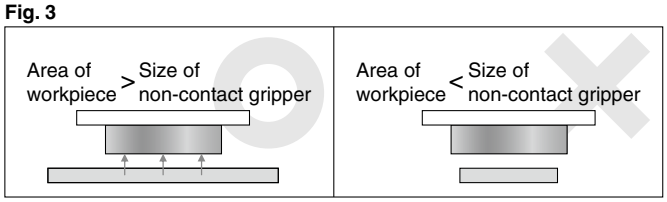

Balance of the workpiece

Install the non-contact gripper at a position such that a moment is not created from the workpiece. (Refer to Fig. 4.) Also, when lifting a flat plate that has a large area with multiple non-contact grippers, install the grippers in such a way that they are well balanced with respect to the workpiece mass. (Refer to Fig. 5.)

Fig. 4

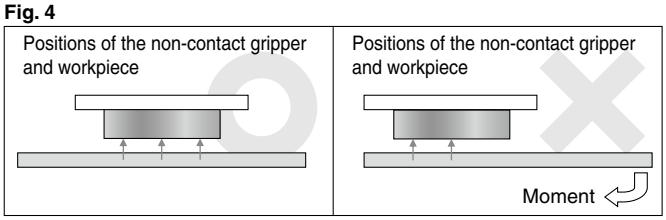

Fig. 5

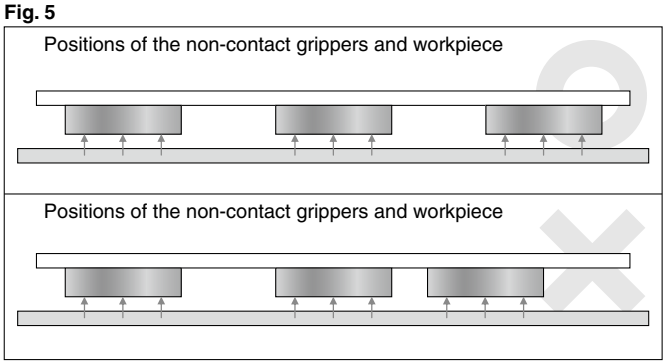

Mounting orientation

The basic mounting direction of the gripper is horizontal. If the gripper is mounted obliquely or vertically, it must also install a guide and use an adequate safety factor (2 or more).

Precautions for Each Kind of Workpiece

Workpiece with holes

Depending on the size and distribution of the hole, it may be impossible to lift the workpiece. To ensure that the workpiece is lifted, the total area of the holes versus the suction area (aperture ratio) must be **1% or less**. However, the lifting force will be reduced, so it is necessary to use an appropriate supply pressure and an adequate safety factor.

Workpiece that has concave/convex surfaces

Depending on the size of the concave/convex surfaces, it may be impossible to lift the workpiece. It is necessary to use an appropriate supply pressure and an adequate safety factor according to the workpiece mass.

Thin workpiece

If the supply pressure is higher than the necessary value, the workpiece may be deformed or damaged due to the lifting force. There is also a possibility of the workpiece vibrating. To prevent this, do not set the supply pressure higher than necessary.

Soft workpiece

As soft workpieces are easy to deform, there is a tendency for the workpiece to touch the bottom of the non-contact gripper. Please be aware that the workpiece may touch the gripper before using.

Other Precautions

Regarding the **XT661-2A**, there is a limit to the size of the fitting for the supply port that can be used. Use a fitting whose connection thread O.D. is ø8 or less and whose width across flats is 8 or less. If greater sizes than these are used, the fitting may interfere with the head of the mounting bolt.

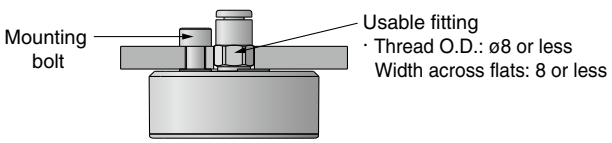

When using a non-contact gripper, install a guide as well.

Provide a guide in accordance with the applications and/or configuration of a workpiece with reference to the following installation examples.

Reasons for installing a guide

■Holding a workpiece

A non-contact gripper does not produce a restraining force that prevents horizontal movement of the workpiece.
Install a guide at the end of the workpiece in order to hold the workpiece.

■Preventing physical contact

Depending on the operating conditions, the workpiece may touch the gripper. To prevent such contact, install a guide that maintains a certain distance between the gripper and the workpiece.

Installation examples

■On the end of the workpiece

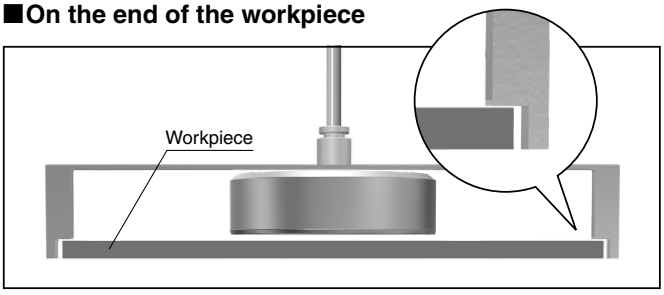

By installing a guide at the end of the workpiece, the contact area can be kept as small as possible.

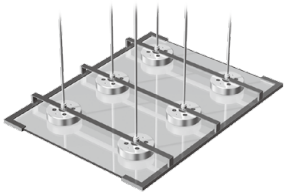

When using multiple non-contact grippers

■On the top of the workpiece (Use in combination with vacuum pads.)

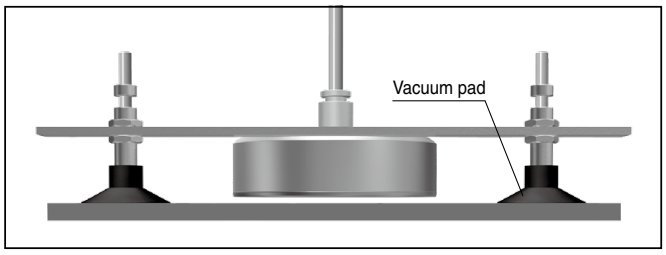

Determine the position of the workpiece using vacuum pads. When transferring the workpiece, use a gripper as well.
This ensures contact with the workpiece to be minimized during transferring.

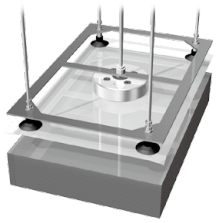

■On the top of the workpiece (External stopper)

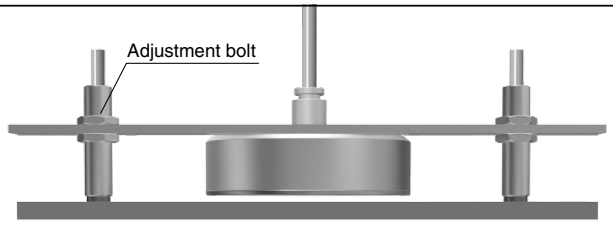

For adjustment bolts, the sold separately options are available.
Refer to page 363.

The adjustment bolts make the distance between the non-contact gripper and workpiece adjustable.
The guide comes with a bumper to ensure the impact to be minimized and also prevent a damage during lifting the workpiece.

■With urethane pad

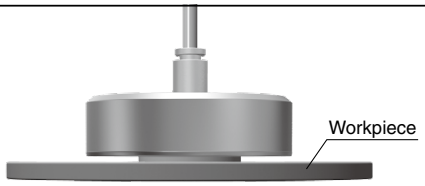

* When using a guide with a urethane pad, refer to the lifting force–distance from the workpiece on page 364. Then as a guide, set the lifting force corresponding to the distance of 1.0 mm between the non-contact gripper and workpiece.

Use the gripper in a contacted condition by means of a urethane pad. This will eliminate the need for a guide.

Non-contact Gripper
XT661 Series

How to Order

Cyclone type

XT661 – 2A – R



Outer body diameter: ø

2A	20 mm
4A	40 mm
6A	60 mm
8A	80 mm
10A	100 mm

Direction of whirling air

R	Clockwise
L	Counterclockwise

Low profile cyclone type

XT661 – 2A – R – X260



Outer body diameter: ø

2A	20 mm
3A	25 mm

Direction of whirling air

R	Clockwise
L	Counterclockwise

Bernoulli type

XT661 – 4C – X321



Outer body diameter: ø

4C	39 mm
6C	59 mm
8C	79 mm
10C	99 mm

Bernoulli type

XT661 – 120E – X322 □

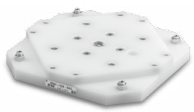

Body size: □

120E	120 mm
150E	150 mm

Accessory

Nil	A	B
None	Guide assembly 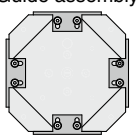	Adjustment bolt assembly 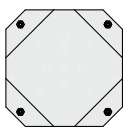

Specifications

	2A	4A	6A	8A	10A
Outer body diameter [mm]	ø20	ø40	ø60	ø80	ø100
Piping port size	M5 x 0.8			Rc 1/8	
Fluid	Air*1				
Operating pressure	0.01 to 0.5 MPa				
Proof pressure	0.75 MPa				
Ambient and operating temperatures	–5 to 60°C (no freezing)				
Grease	Grease-free				
Body material	A2017				
Weight [g]	12.5	49	114	206	310

*1 Air purification rating: JIS B 8392-1 (ISO 8573-1) Quality Degree 4, 4, 2 or more

	2A	3A
Outer body diameter [mm]	ø20	ø25
Piping port size	ø1.6	
Fluid	Air*1	
Operating pressure	0.01 to 0.5 MPa	
Proof pressure	0.75 MPa	
Ambient and operating temperatures	–5 to 40°C (no freezing)	
Grease	Grease-free	
Body material	A2017	
Weight [g]	1.33	2.13

*1 Air purification rating: JIS B 8392-1 (ISO 8573-1) Quality Degree 4, 4, 2 or more

* Use adhesive to mount the gripper.

	4C	6C	8C	10C	120E	150E
Outer body diameter [mm]	ø39	ø59	ø79	ø99	□120	□150
Piping port size	M5 x 0.8			Rc 1/8		
Fluid	Air*1					
Operating pressure	0.01 to 0.4 MPa					
Proof pressure	0.6 MPa					
Ambient and operating temperatures	–5 to 40°C (no freezing)					
Grease	Grease-free					
Body material	PBT					
Weight [g]	26	55	108	170	260	410

*1 Air purification rating: JIS B 8392-1 (ISO 8573-1) Quality Degree 4, 4, 2 or more

Sold Separately Options: External Stopper (Order Separately)

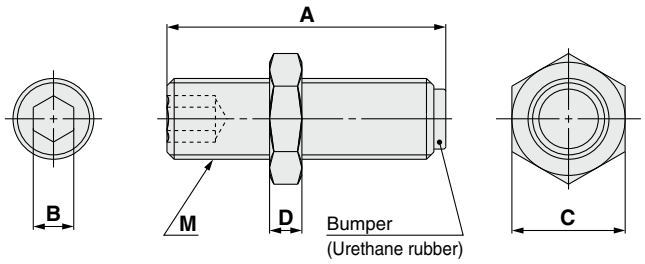

Model	Adjustment range [mm]	A	B	C	D	M
MXQ-A627	5	16.5	2.5	7	3	M5 x 0.8
MXQ-A627-X11	15	26.5				
MXQ-A827	5	16.5	3	8	3.5	M6 x 1
MXQ-A827-X11	15	26.5				
MXQ-A827-X12	25	36.5				
MXQ-A1227	5	20	4	12	4	M8 x 1
MXQ-A1227-X11	15	30				
MXQ-A1227-X12	25	40				
MXQ-A1627	5	24.5	5	14	4	M10 x 1
MXQ-A1627-X11	15	34.5				
MXQ-A1627-X12	25	44.5				
MXQ-A2027	5	27.5	6	17	5	M12 x 1.25
MXQ-A2027-X11	15	37.5				
MXQ-A2027-X12	25	47.5				
MXQ-A2527	5	32.5	6	19	6	M14 x 1.5
MXQ-A2527-X11	15	42.5				
MXQ-A2527-X12	25	52.5				

Lifting Force [Cyclone Type]

Size: ø20

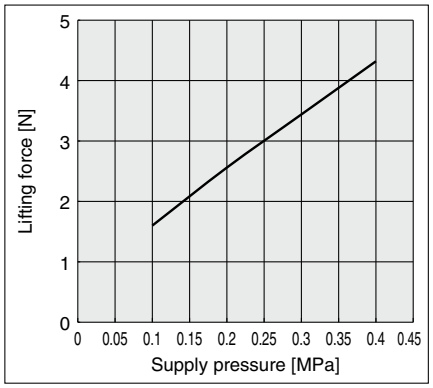

Size: ø40/ø60/ø80

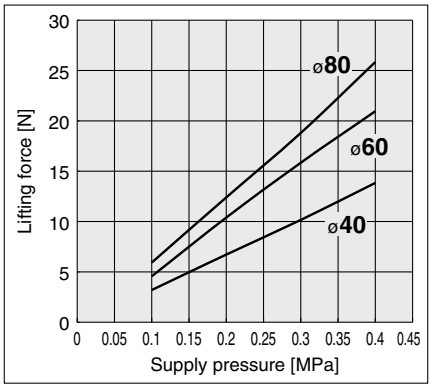

Size: ø100

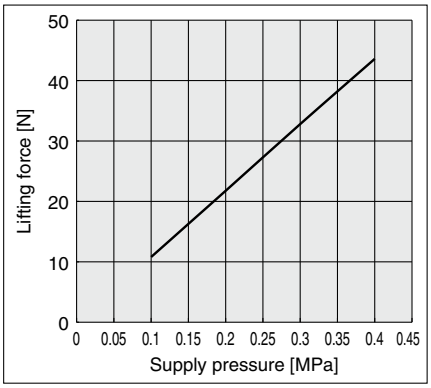

Lifting Force [Low Profile Cyclone Type]

Size: ø20

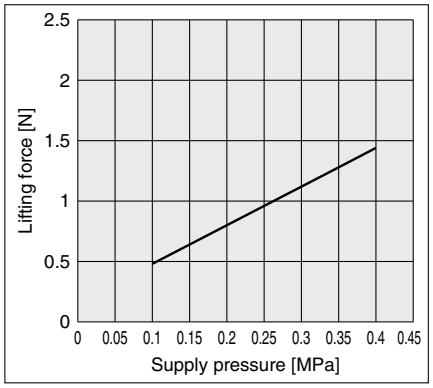

Size: ø25

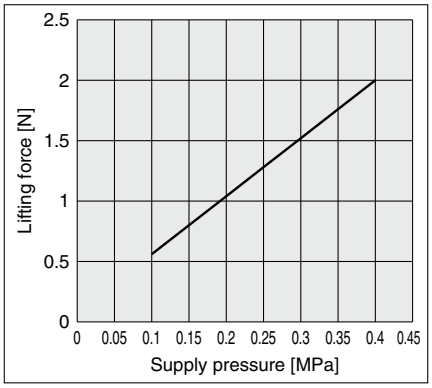

Air Consumption [Cyclone Type]

Size: ø20

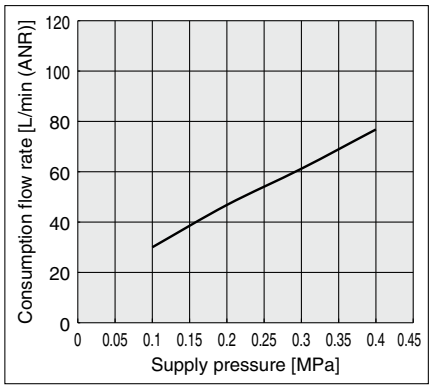

Size: ø40/ø60/ø80

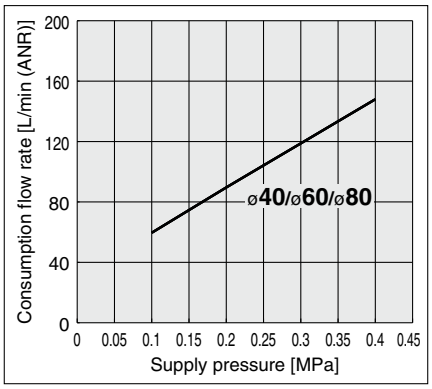

Size: ø100

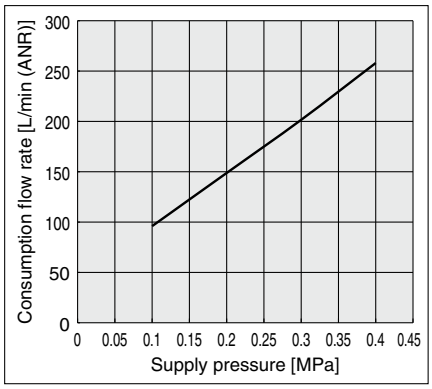

Air Consumption [Low Profile Cyclone Type]

Size: ø20/ø25

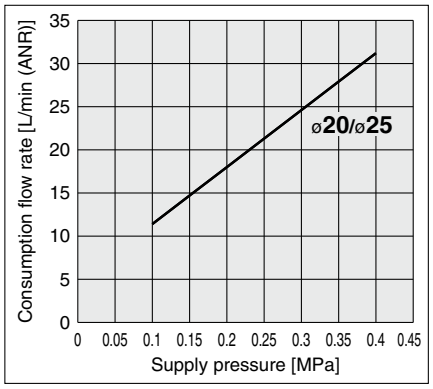

Lifting Force–Distance from the Workpiece [Cyclone Type]

Size: ø20

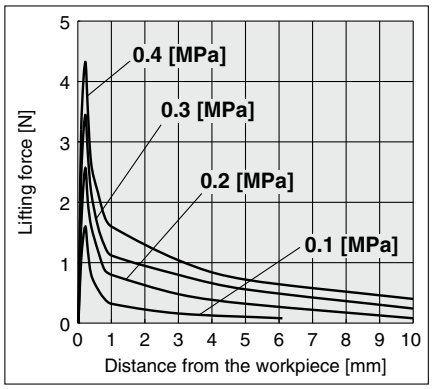

Size: ø40

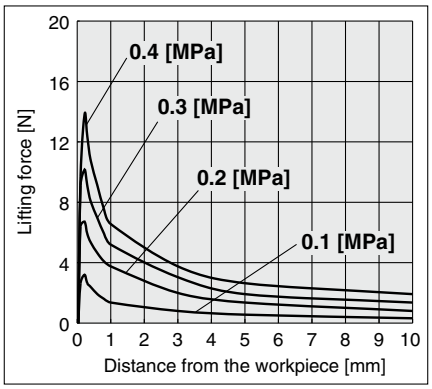

Size: ø60

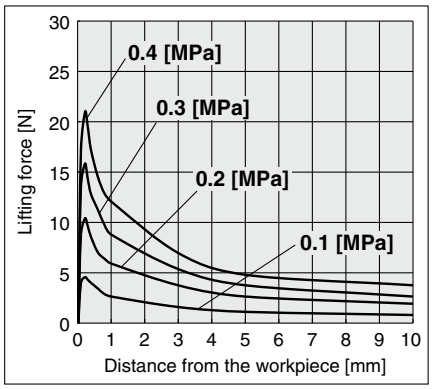

Size: ø80

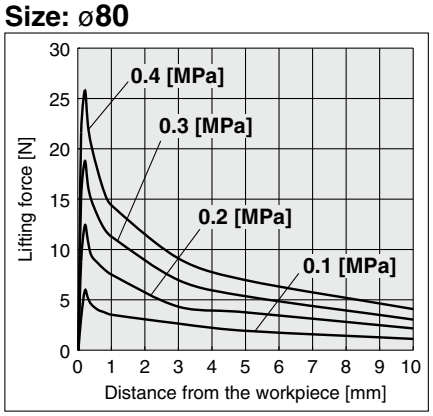

Size: ø100

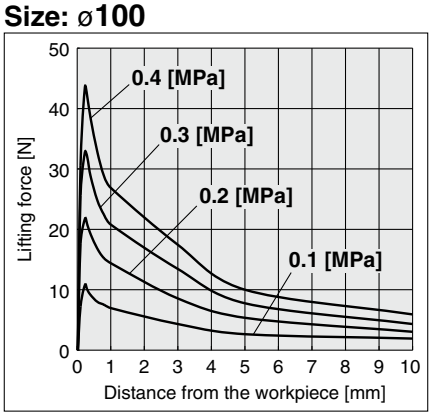

Lifting Force–Distance from the Workpiece [Low Profile Cyclone Type]

Size: ø20

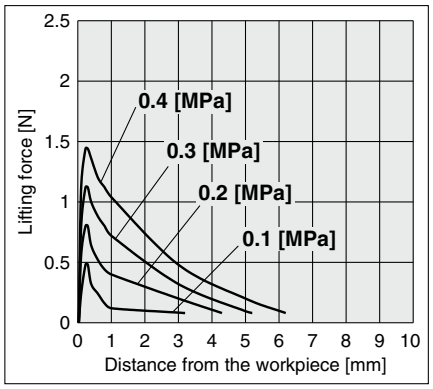

Size: ø25

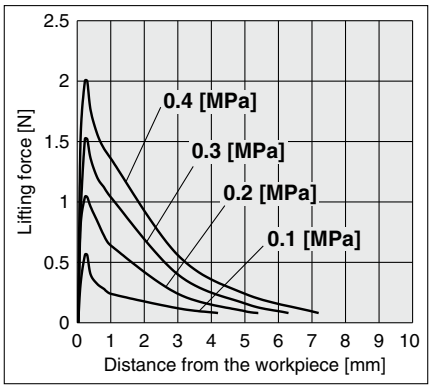

Lifting Force [Bernoulli Type]

Size: ø40/ø60/ø80

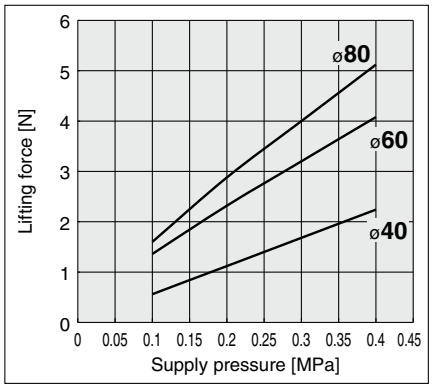

Size: ø100

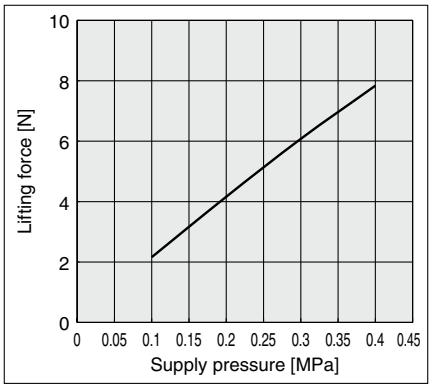

Size: □120/□150

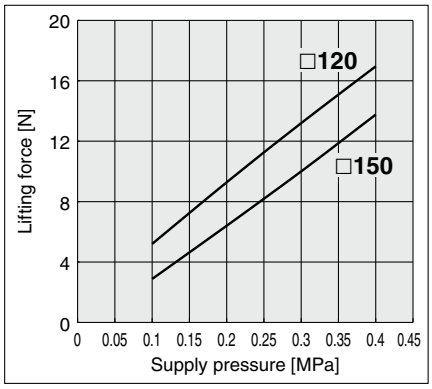

Air Consumption [Bernoulli Type]

Size: ø40/ø60/ø80

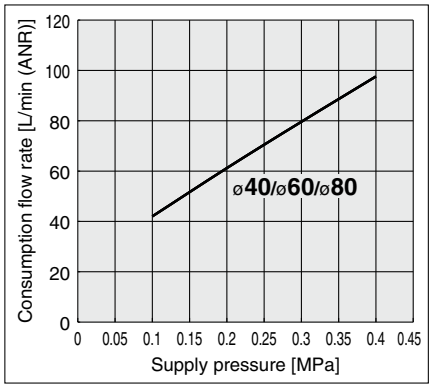

Size: ø100

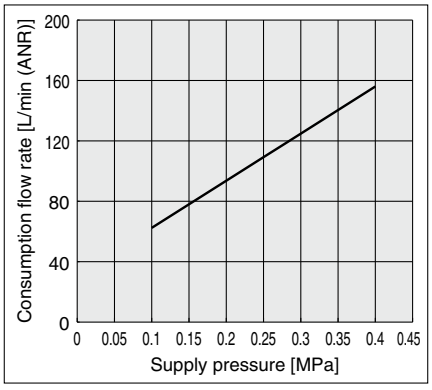

Size: □120/□150

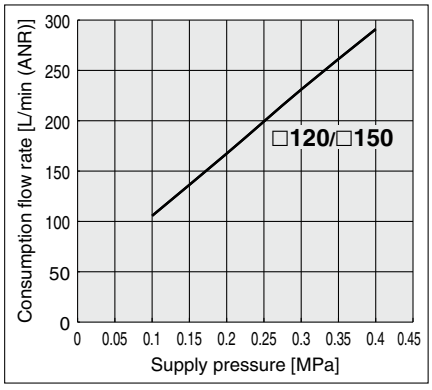

Lifting Force–Distance from the Workpiece [Bernoulli Type]

Size: ø40

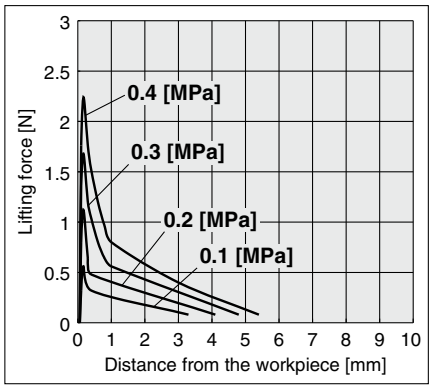

Size: ø60

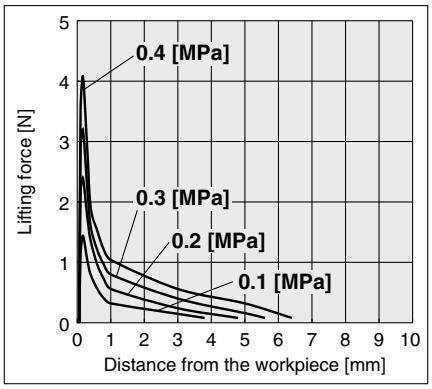

Size: ø80

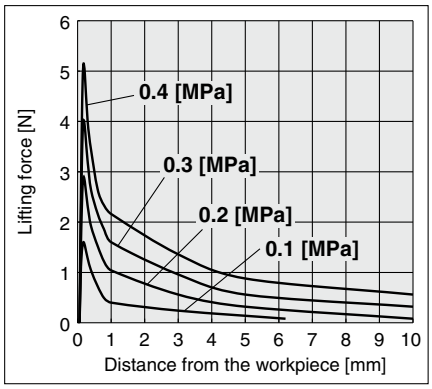

Size: ø100

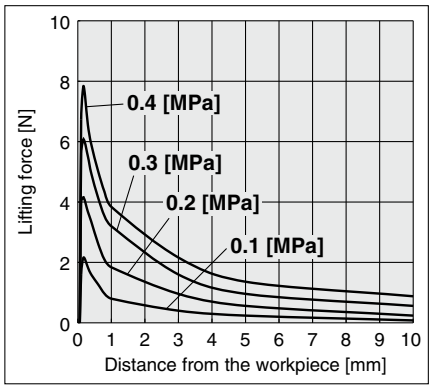

Size: □120

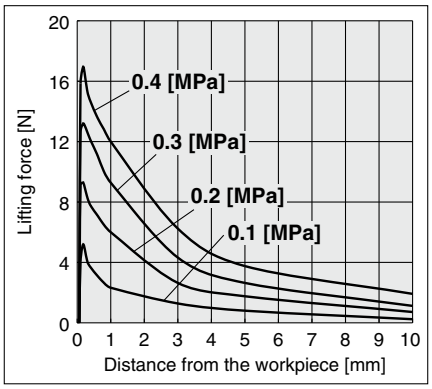

Size: □150

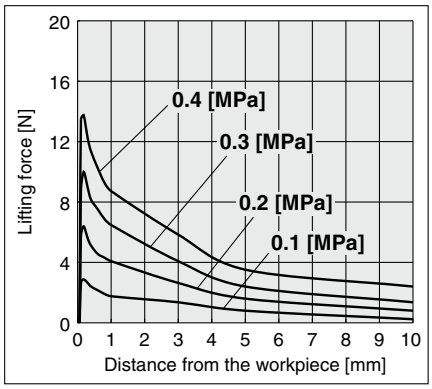

Vibration [Bernoulli Type] Supply pressure: 0.1 MPa

Size: ø40

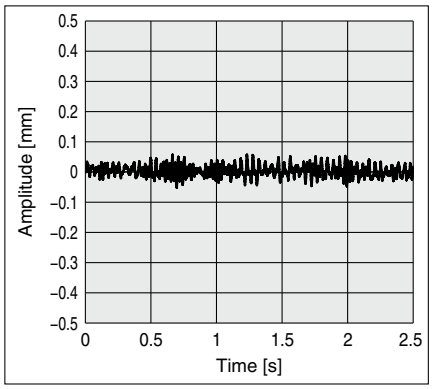

Size: ø60

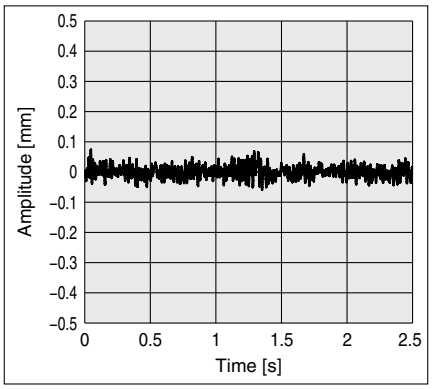

Size: ø80

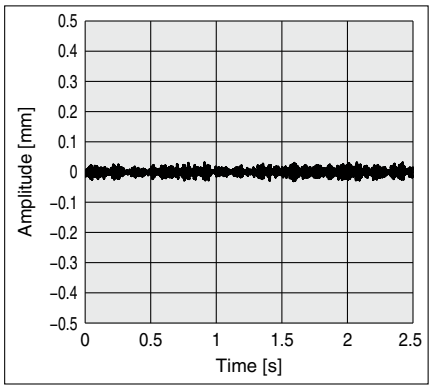

Size: ø100

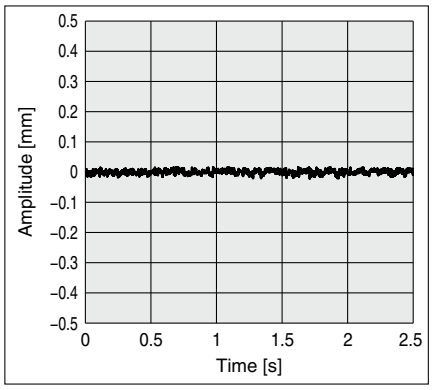

Size: □120

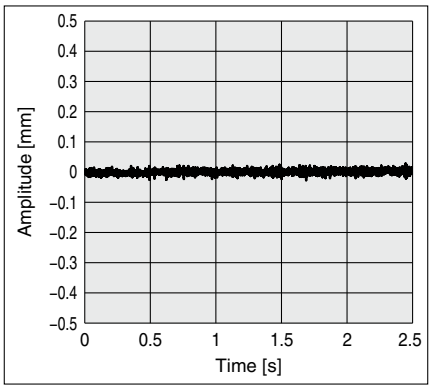

Size: □150

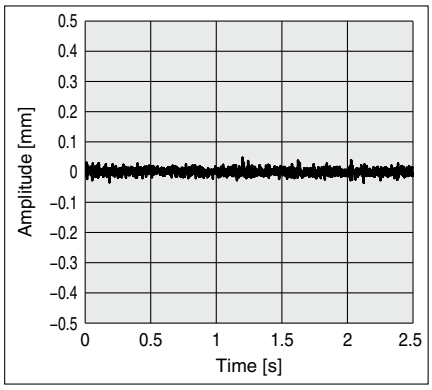

∗ □155 solar cell is used for this data only.

Construction [Cyclone Type]

Size: ø20

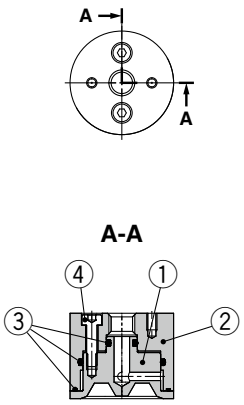

Size: ø40, ø60, ø80, ø100

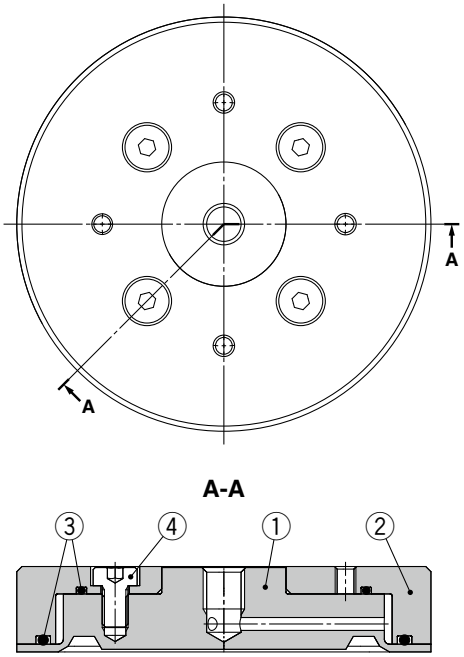

Component Parts

No.	Description	Material	Note
1	**Body (R, L)**	Aluminum alloy (Hard anodized)	XT661-2A to 10A
2	**Body M**	Aluminum alloy (Hard anodized)	
3	**O-ring**	NBR	
4	**Hexagon socket head cap screw**	Stainless steel	

Construction [Low Profile Cyclone Type]

Size: ø20, ø25

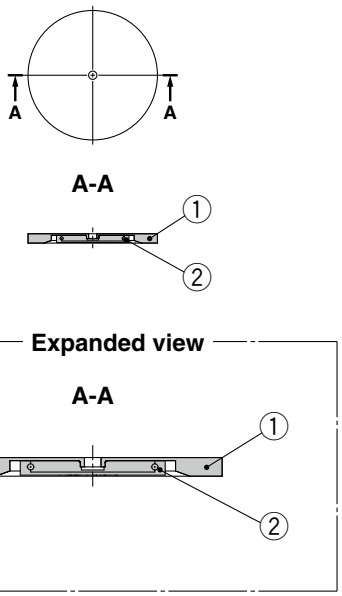

Component Parts

No.	Description	Material	Note
1	**Body (R, L)**	Aluminum alloy (Black hard anodized)	XT661-2A, 3A
2	**Body M**	Aluminum alloy (Black hard anodized)	

Construction [Bernoulli Type]

Size: ø40

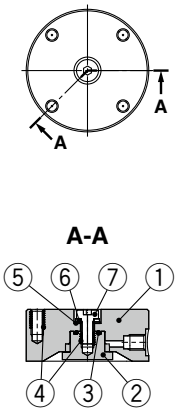

Size: ø60

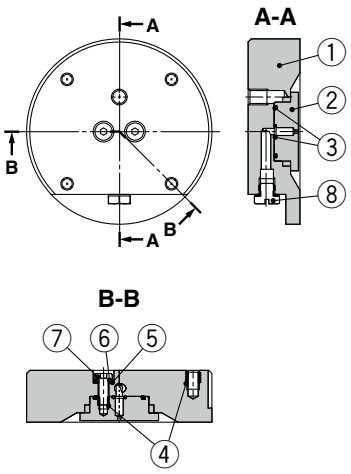

Size: ø80, ø100

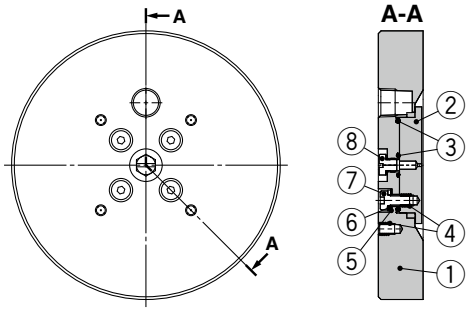

Size: □120, □150

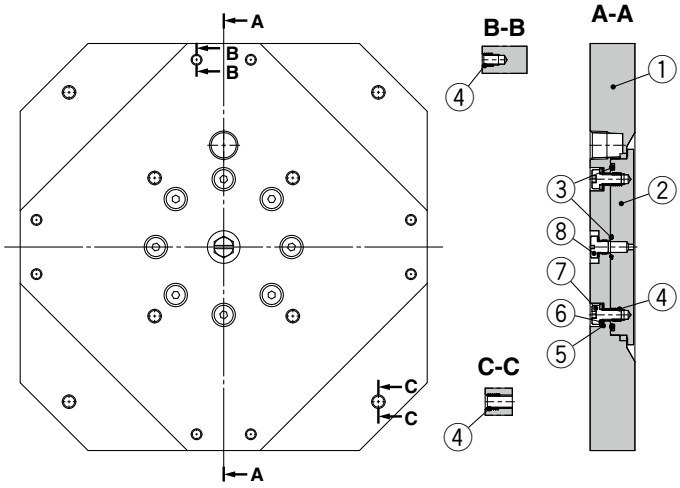

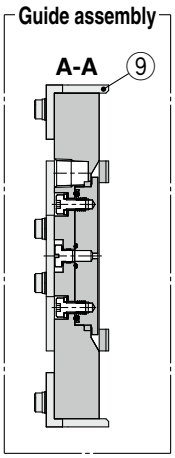

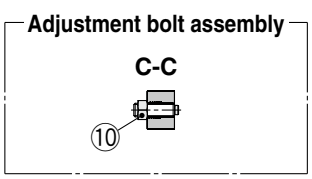

Component Parts

No.	Description	Material	Note
1	**Body A**	PBT resin	XT661-4C to 10C XT661-120E, 150E
2	**Body B**	PBT resin	
3	**O-ring**	NBR	
4	**Helical insert**	Stainless steel	
5	**Flat washer**	Chromium molybdenum steel (Zinc chromated)	
6	**Spring washer**	Chromium molybdenum steel (Zinc chromated)	
7	**Hexagon socket head cap screw**	Chromium molybdenum steel (Zinc chromated)	
8	**Plug**	Brass/NBR/Stainless steel	Except XT661-4C
9	**Guide assembly**	POM/Chromium molybdenum steel (Zinc chromated)	Accessories for XT661-120E, 150E
10	**Adjustment bolt assembly**	Polyurethane/Chromium molybdenum steel, mild steel (Zinc chromated)	

Dimensions [Cyclone Type]

XT661-2A-(R, L)

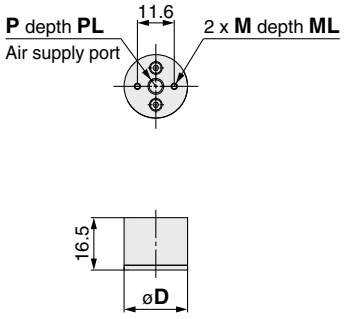

XT661-4A-(R, L)

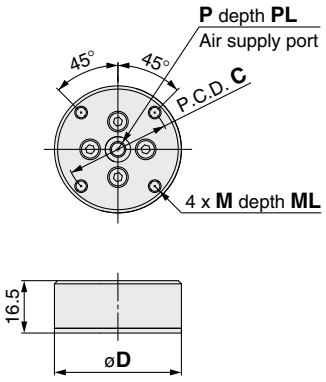

XT661-6A-(R, L)

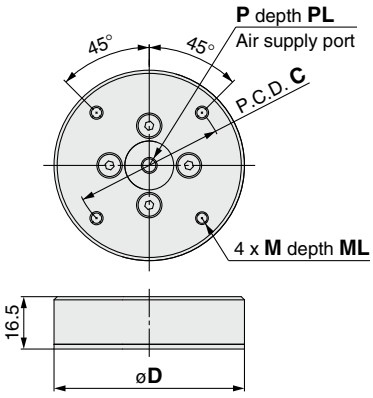

XT661-8A-(R, L)

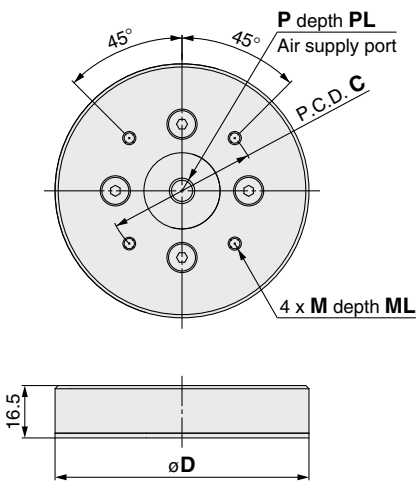

XT661-10A-(R, L)

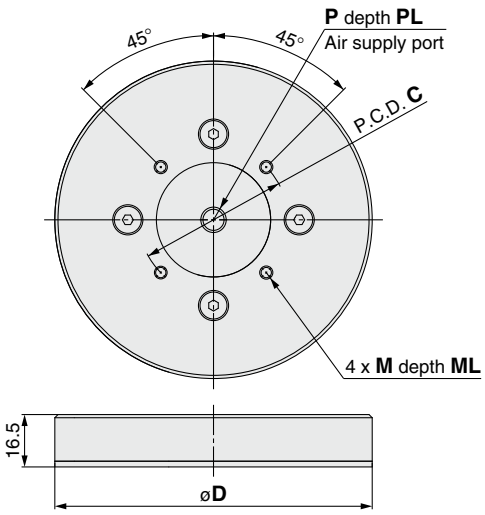

[mm]

Part no.	P	PL	M	ML	C	D
XT661-2A-(R, L)	M5 x 0.8	5	M2 x 0.4	3.2	—	20
XT661-4A-(R, L)	M5 x 0.8	5	M4 x 0.7	5	32.8	40
XT661-6A-(R, L)	M5 x 0.8	5	M4 x 0.7	5	47	60
XT661-8A-(R, L)	Rc 1/8	—	M4 x 0.7	5	47	80
XT661-10A-(R, L)	Rc 1/8	—	M4 x 0.7	5	47	100

Dimensions [Low Profile Cyclone Type]

XT661-2A-(R, L)-X260

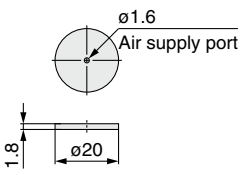

XT661-3A-(R, L)-X260

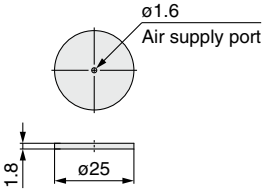

Dimensions [Bernoulli Type]

XT661-4C-X321

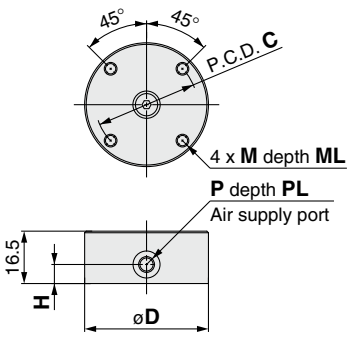

XT661-6C-X321

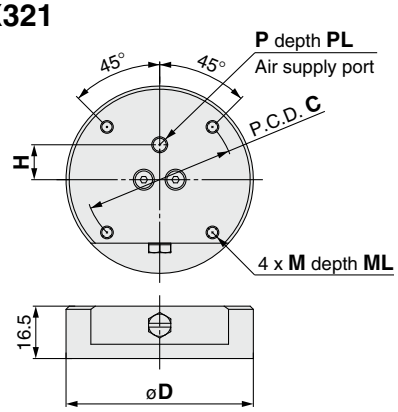

XT661-8C-X321

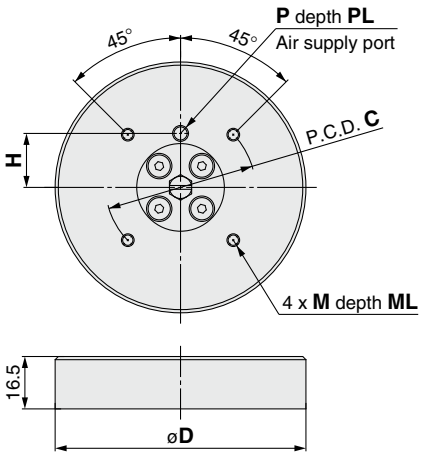

XT661-10C-X321

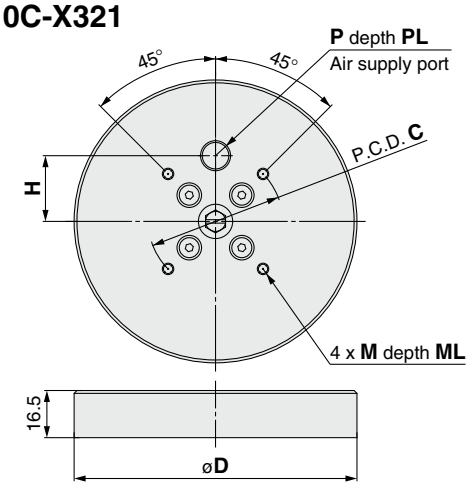

XT661-120E-X322

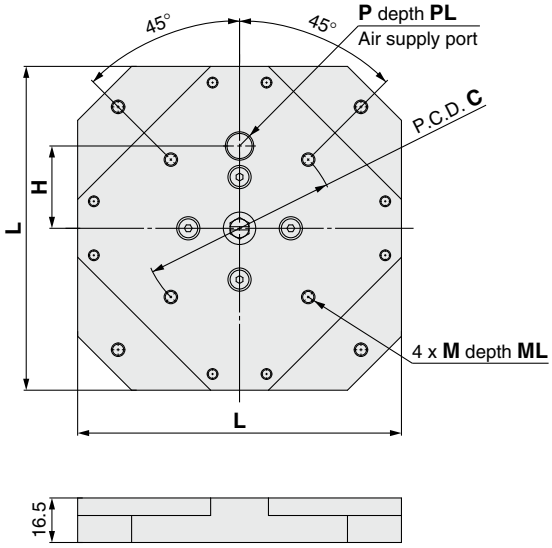

XT661-150E-X322

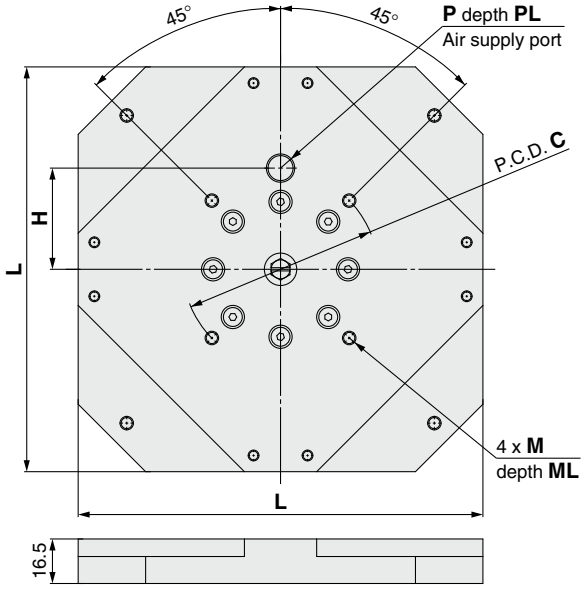

[mm]

Part no.	P	PL	M	ML	C	H	D	L
XT661-4C-X321	M5 x 0.8	5	M4 x 0.7	8	32	6	39	—
XT661-6C-X321	M5 x 0.8	6	M4 x 0.7	6	47	11	59	—
XT661-8C-X321	M5 x 0.8	6	M4 x 0.7	6	47	17	79	—
XT661-10C-X321	Rc 1/8	—	M4 x 0.7	6	47	23	99	—
XT661-120E-X322	Rc 1/8	—	M5 x 0.8	7	72	30.5	—	120
XT661-150E-X322	Rc 1/8	—	M5 x 0.8	7	72	37.5	—	150

Dimensions [Bernoulli Type]

With guide assembly

Size: □120

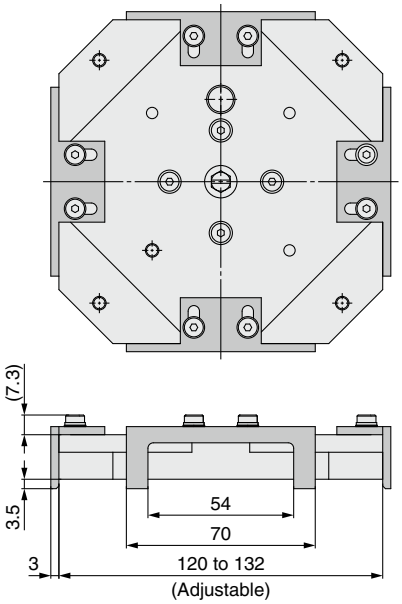

Size: □150

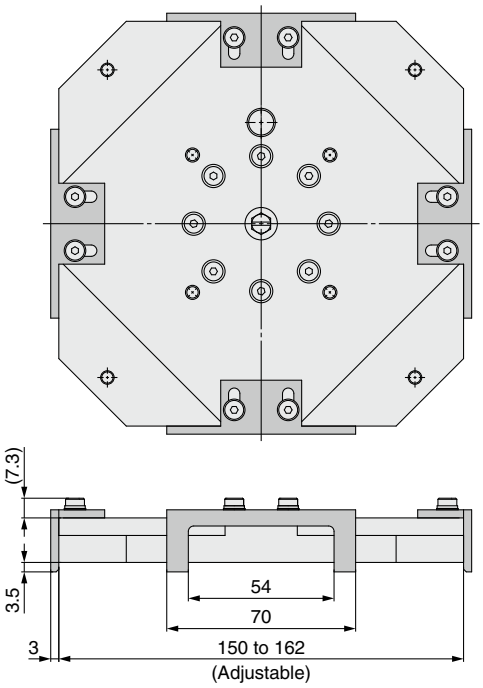

With adjustment bolt assembly

Size: □120

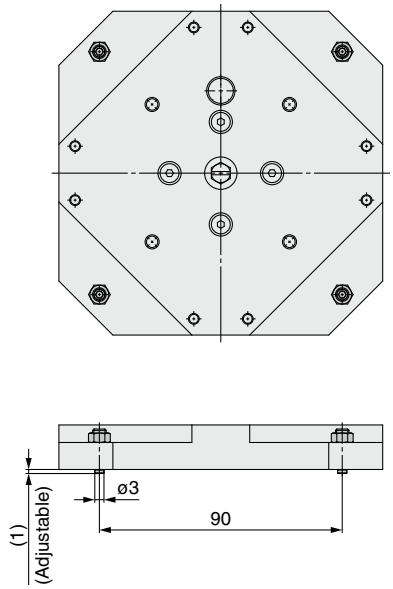

Size: □150

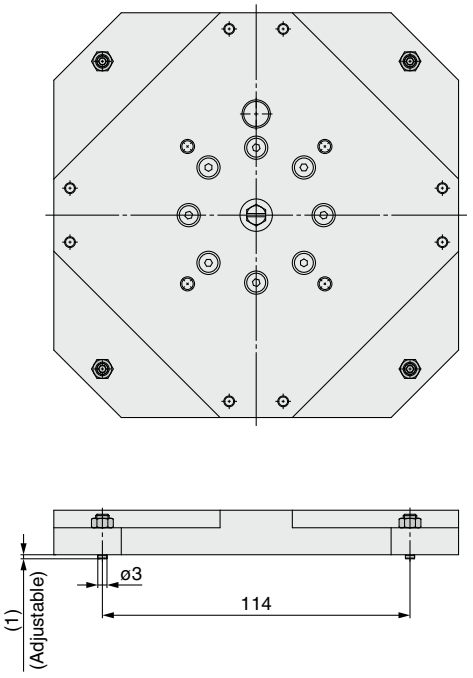

Adsorbs and Holds with a Magnet

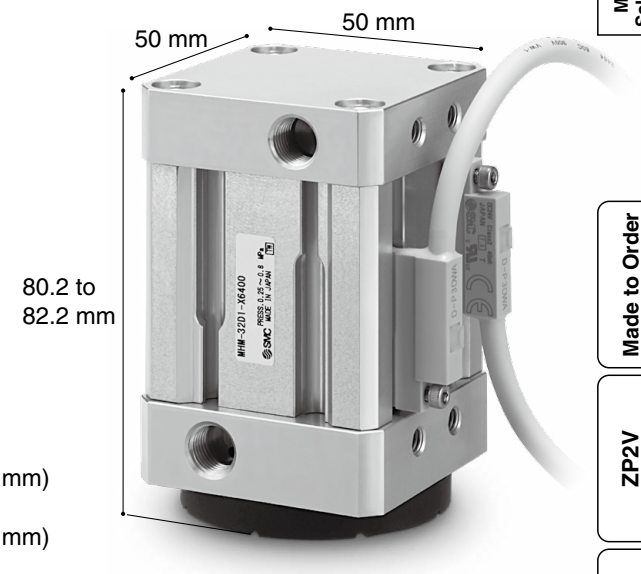

Steel plates can be transferred without a vacuum.

Can support workpieces with holes and uneven surfaces when a vacuum pad cannot be used

Holds workpieces even when the air is shut off

High holding force 80 N (Workpiece plate thickness: 0.6 mm)
120 N (Workpiece plate thickness: 1.4 mm)

Residual holding force 0.3 N or less (Reduces workpiece release time)

Workpiece adsorption/holding

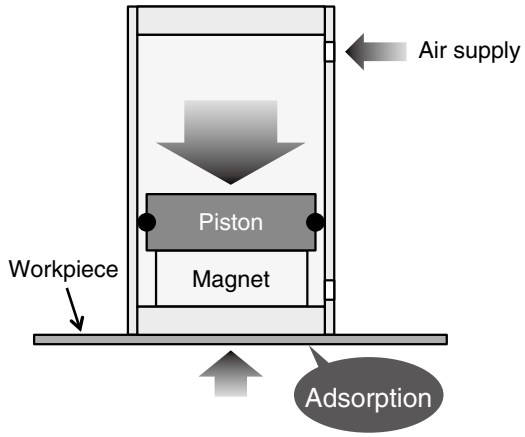

Workpiece release

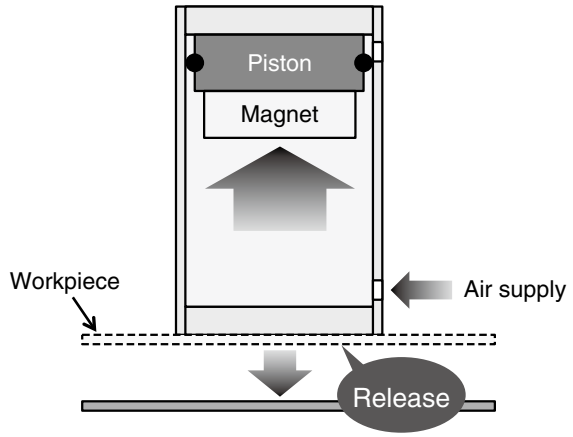

Holding force can be adjusted with a bumper with 3 types of thicknesses.

Thickness	Holding force
6 mm	80 N
7 mm	50 N
8 mm	30 N

Prevents deformation of workpieces and accidental adsorption of a second piece. Fluororubber with excellent oil resistance is used. Has a contact surface structure which reduces sideslip. Bumper can be replaced without a tool.

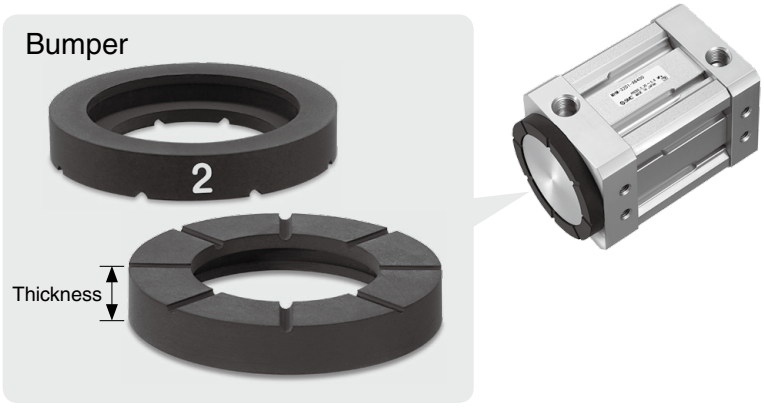

Auto switches can be mounted on 4 surfaces.

Magnetic field-resistant auto switch:
D-P3DWA

Small auto switch:
D-M9□V



Mountable on 3 surfaces.

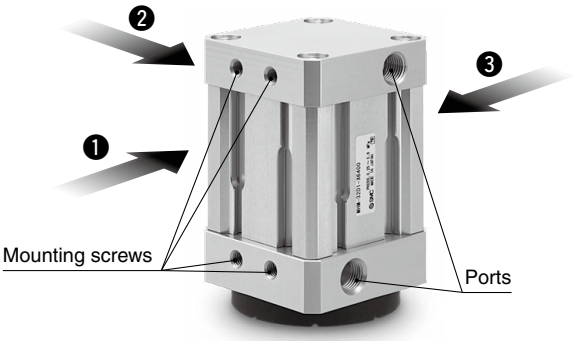

Magnet Gripper
MHM-X6400

How to Order

MHM − 32D [1] − [P3DWAL] [ ] − X6400

Holding force

Symbol	Holding force
1	80 N
2	50 N
3	30 N

Auto switch

Nil	Without auto switch
P3DWA□	D-P3DWA□
M9□V	D-M9□V□

∗ For applicable auto switches, refer to the table below.

Number of auto switches

Nil	2
S	1

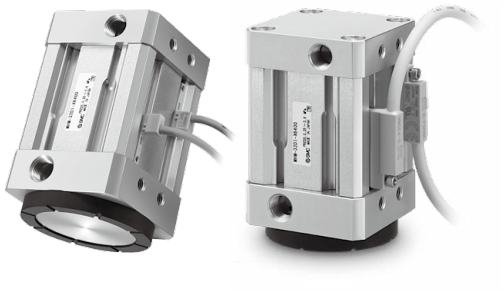

Applicable Auto Switches: Refer to the **Web Catalog** for further information on auto switches.

Magnetic Field-Resistant Auto Switches

Type	Auto switch model	Applicable magnetic field	Electrical entry	Indicator light	Wiring (Pin no. in use)	Load voltage	Lead wire length	Applicable load
Solid state auto switch	**P3DWASC**	AC magnetic field (Single-phase AC welding magnetic field)	Pre-wired connector	2-color	2-wire (3–4)	24 VDC	0.3 m	Relay, PLC
	P3DWASE				2-wire (1–4)			
	P3DWA		Grommet		2-wire		0.5 m	
	P3DWAL						3 m	
	P3DWAZ						5 m	

Small Auto Switches

Type	Special function	Electrical entry	Indicator light	Wiring (Output)	Load voltage			Auto switch model	Lead wire length [m]				Pre-wired connector	Applicable load	
					DC		AC	Perpendicular	0.5 (Nil)	1 (M)	3 (L)	5 (Z)			
Solid state auto switch	—	Grommet	Yes	3-wire (NPN)	24 V	5 V, 12 V	—	**M9NV**	●	●	●	○	○	IC circuit	Relay, PLC
				3-wire (PNP)				**M9PV**	●	●	●	○	○		
				2-wire		12 V		**M9BV**	●	●	●	○	○	—	
	Diagnostic indication (2-color indicator)			3-wire (NPN)		5 V, 12 V		**M9NWV**	●	●	●	○	○	IC circuit	
				3-wire (PNP)				**M9PWV**	●	●	●	○	○		
				2-wire		12 V		**M9BWV**	●	●	●	○	○	—	
	Water resistant (2-color indicator)			3-wire (NPN)		5 V, 12 V		**M9NAV**	○	○	●	○	○	IC circuit	
				3-wire (PNP)				**M9PAV**	○	○	●	○	○		
				2-wire		12 V		**M9BAV**	○	○	●	○	○	—	

∗ Solid state auto switches marked with "○" are produced upon receipt of order.
∗ For details about auto switches with pre-wired connectors, refer to the **Web Catalog**.
∗ Auto switches are shipped together with the product but do not come assembled.

∗ Lead wire length symbols: 0.5 m ····· Nil (Example) M9NWV
1 m ····· M (Example) M9NWVM
3 m ····· L (Example) M9NWVL
5 m ····· Z (Example) M9NWVZ

Specifications

Action		Double acting
Fluid		Air
Operating pressure		0.25 to 0.6 MPa
Ambient and fluid temperatures		−10 to 60°C (No freezing)
Holding force (Workpiece thickness: 0.6 mm)	**MHM-32D1-X6400**	80 N
	MHM-32D2-X6400	50 N
	MHM-32D3-X6400	30 N
Residual holding force		0.3 N or less
Lubrication		Non-lube
Weight		475 g

Bumper Order Nos.

Symbol	Holding force	Model
1	**80 N**	MHM-A3201-1-X6400
2	**50 N**	MHM-A3201-2-X6400
3	**30 N**	MHM-A3201-3-X6400

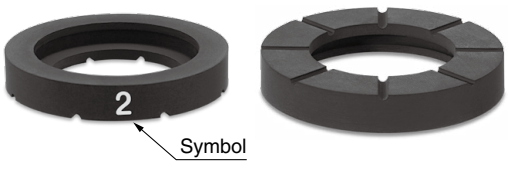

Dimensions

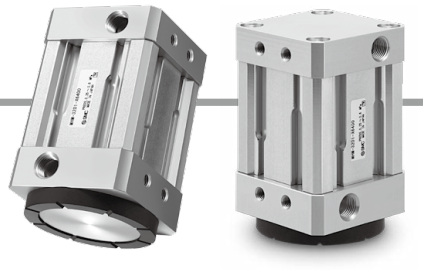

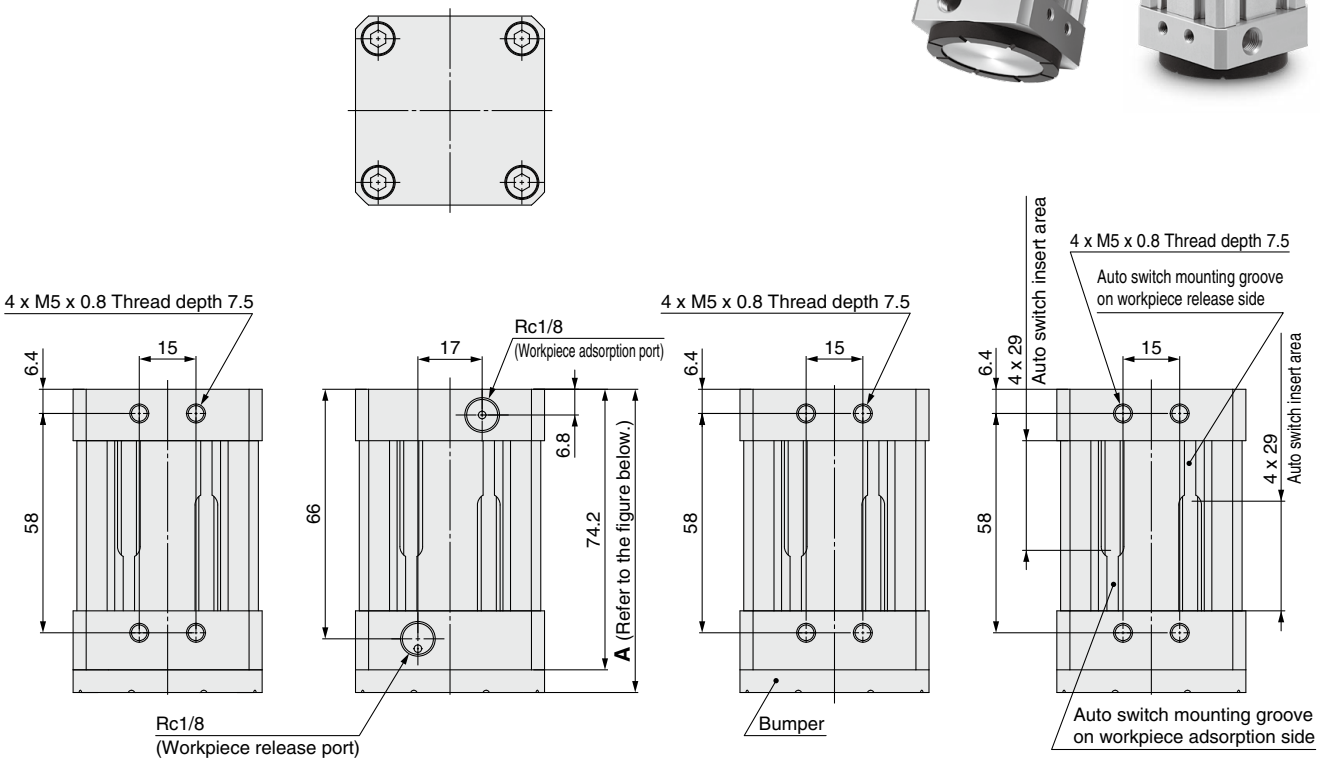

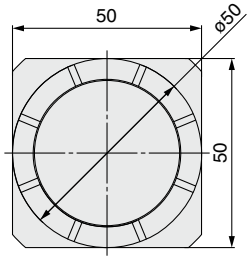

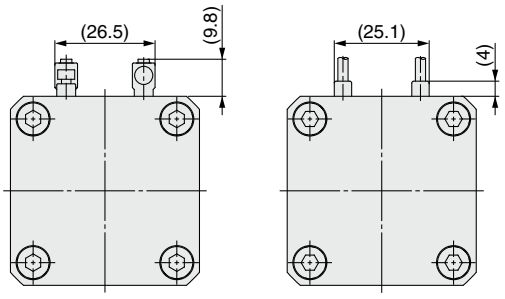

D-P3DWA **D-M9□V**

With auto switch

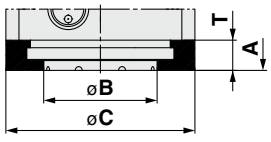

Symbol	Part number	A	øB	øC	T
1	**MHM-32D1-X6400**	80.2	39	50	(6)
2	**MHM-32D2-X6400**	81.2	30		(7)
3	**MHM-32D3-X6400**	82.2			(8)

Bumper dimensions

⚠ Caution

- Since a thin plate is used for the metal surface on the end, damage may occur when an impact load is applied due to contact with a workpiece. Be sure to attach a bumper before use, and check and adjust operation so that no impact load is applied to the metal surface.
- When operating an actuator with a small diameter and a short stroke at a high frequency, dew condensation (water droplets) may occur inside the piping depending on the conditions.
  Simply connecting the moisture control tube (IDK series) to the actuator will prevent dew condensation from occurring. For details, refer to the IDK series in the **Web Catalog**.

⚠ Safety Instructions

These safety instructions are intended to prevent hazardous situations and/or equipment damage. These instructions indicate the level of potential hazard with the labels of **"Caution," "Warning"** or **"Danger."** They are all important notes for safety and must be followed in addition to International Standards (ISO/IEC)*1), and other safety regulations.

⚠ Caution: **Caution** indicates a hazard with a low level of risk which, if not avoided, could result in minor or moderate injury.

⚠ Warning: **Warning** indicates a hazard with a medium level of risk which, if not avoided, could result in death or serious injury.

⚠ Danger : **Danger** indicates a hazard with a high level of risk which, if not avoided, will result in death or serious injury.

*1) ISO 4414: Pneumatic fluid power – General rules relating to systems.
ISO 4413: Hydraulic fluid power – General rules relating to systems.
IEC 60204-1: Safety of machinery – Electrical equipment of machines.
(Part 1: General requirements)
ISO 10218-1: Manipulating industrial robots – Safety.
etc.

⚠ Warning

1. The compatibility of the product is the responsibility of the person who designs the equipment or decides its specifications.

Since the product specified here is used under various operating conditions, its compatibility with specific equipment must be decided by the person who designs the equipment or decides its specifications based on necessary analysis and test results. The expected performance and safety assurance of the equipment will be the responsibility of the person who has determined its compatibility with the product. This person should also continuously review all specifications of the product referring to its latest catalog information, with a view to giving due consideration to any possibility of equipment failure when configuring the equipment.

2. Only personnel with appropriate training should operate machinery and equipment.

The product specified here may become unsafe if handled incorrectly. The assembly, operation and maintenance of machines or equipment including our products must be performed by an operator who is appropriately trained and experienced.

3. Do not service or attempt to remove product and machinery/ equipment until safety is confirmed.

1. The inspection and maintenance of machinery/equipment should only be performed after measures to prevent falling or runaway of the driven objects have been confirmed.
2. When the product is to be removed, confirm that the safety measures as mentioned above are implemented and the power from any appropriate source is cut, and read and understand the specific product precautions of all relevant products carefully.
3. Before machinery/equipment is restarted, take measures to prevent unexpected operation and malfunction.

4. Contact SMC beforehand and take special consideration of safety measures if the product is to be used in any of the following conditions.

1. Conditions and environments outside of the given specifications, or use outdoors or in a place exposed to direct sunlight.
2. Installation on equipment in conjunction with atomic energy, railways, air navigation, space, shipping, vehicles, military, medical treatment, combustion and recreation, or equipment in contact with food and beverages, emergency stop circuits, clutch and brake circuits in press applications, safety equipment or other applications unsuitable for the standard specifications described in the product catalog.
3. An application which could have negative effects on people, property, or animals requiring special safety analysis.
4. Use in an interlock circuit, which requires the provision of double interlock for possible failure by using a mechanical protective function, and periodical checks to confirm proper operation.

⚠ Caution

1. The product is provided for use in manufacturing industries.

The product herein described is basically provided for peaceful use in manufacturing industries.
If considering using the product in other industries, consult SMC beforehand and exchange specifications or a contract if necessary.
If anything is unclear, contact your nearest sales branch.

Limited warranty and Disclaimer/ Compliance Requirements

The product used is subject to the following "Limited warranty and Disclaimer" and "Compliance Requirements".
Read and accept them before using the product.

Limited warranty and Disclaimer

1. The warranty period of the product is 1 year in service or 1.5 years after the product is delivered, whichever is first.*2)
   Also, the product may have specified durability, running distance or replacement parts. Please consult your nearest sales branch.
2. For any failure or damage reported within the warranty period which is clearly our responsibility, a replacement product or necessary parts will be provided.
   This limited warranty applies only to our product independently, and not to any other damage incurred due to the failure of the product.
3. Prior to using SMC products, please read and understand the warranty terms and disclaimers noted in the specified catalog for the particular products.

*2) **Vacuum pads are excluded from this 1 year warranty.**
A vacuum pad is a consumable part, so it is warranted for a year after it is delivered.
Also, even within the warranty period, the wear of a product due to the use of the vacuum pad or failure due to the deterioration of rubber material are not covered by the limited warranty.

Compliance Requirements

1. The use of SMC products with production equipment for the manufacture of weapons of mass destruction (WMD) or any other weapon is strictly prohibited.
2. The exports of SMC products or technology from one country to another are governed by the relevant security laws and regulations of the countries involved in the transaction. Prior to the shipment of a SMC product to another country, assure that all local rules governing that export are known and followed.

⚠ Caution

SMC products are not intended for use as instruments for legal metrology.

Measurement instruments that SMC manufactures or sells have not been qualified by type approval tests relevant to the metrology (measurement) laws of each country. Therefore, SMC products cannot be used for business or certification ordained by the metrology (measurement) laws of each country.

Vacuum Equipment Precautions 1

Be sure to read this before handling products.

Design/Selection

⚠Warning

1. Confirm the specifications.

Products represented in this catalog are designed only for use in compressed air systems (including vacuum).
Do not operate at pressures, temperatures, etc., beyond the range of specifications, as this can cause damage or malfunction. (Refer to the specifications.)
Please contact SMC when using a fluid other than compressed air (including vacuum).
We do not guarantee against any damage if the product is used outside of the specification range.

2. Safe designs should be developed, which account for the possibility of accidents resulting from a drop in vacuum pressure due to power failure, trouble with the air supply, etc.

If vacuum pressure drops and there is a loss of vacuum pad adsorption force, workpieces being carried may fall, causing human injury or damage to machinery. Sufficient safety measures should be implemented, such as drop prevention, to avoid any accidents.

3. Follow vacuum specifications for vacuum switching valves and vacuum release valves.

If non-vacuum equipment is installed in a vacuum piping, vacuum leakage will occur. Therefore, select only equipment for vacuum specifications.

4. Select an ejector which has a suitable suction flow rate.

<When there is vacuum leakage from the workpiece or the piping>
If the ejector's suction flow rate is too low, the adsorption will be poor.

<When piping is long or the diameter is large>
The adsorption response time will delay due to the increased volume of the piping.
Select an ejector with a suitable suction flow rate by referring to the technical data.

5. If the suction flow rate is too high, setting of vacuum switch will become difficult.

Setting the vacuum switch when adsorbing a small (few millimeter) workpiece will sometimes become difficult, if the selected ejector has a high suction flow rate and there is a small pressure difference when adsorbing and releasing the workpiece.

6. When two or more pads are piped to one ejector, if one pad releases its workpiece, the other pads will also release.

When one pad releases its workpiece, there is a drop in vacuum pressure which causes the other pad to release its workpiece as well.

7. When separating the pad from the workpiece, break the vacuum and confirm that the pressure is atmospheric pressure.

Do not separate them forcibly while vacuum pressure exists between them. This may cause cracking, tearing, or distortion of the pad, or cause the pad to come off the adapter.

8. Do not apply a lateral load (force), such as rotation or sliding force of the workpiece, to the adsorption surface of the pad during the adsorption of a workpiece.

This may cause deformation, cracking, tearing, or distortion of the pad, or cause the pad to come off the adapter.

9. Do not disassemble the product or make any modifications, including additional machining.

Doing so may cause human injury and/or an accident.
When disassembling or assembling the product for the purpose of replacing parts, etc., be certain to follow the operation manual or catalogs.

10. Vacuum holding using check valves

SMC can issue no guarantees regarding the maintenance of workpiece adsorption when using check valves. Take separate safety measures to prevent workpieces from dropping in the case of an electrical power outage, etc.
Please consult with SMC when using check valves as a means of preventing interference caused by the exhaust from nearby ejectors.

11. Air leakage from main valve

SMC does not guarantee zero air leaks from the main valve used for the vacuum ejector/vacuum pump system. If air leakage is a problem, please contact SMC.

12. Vacuum pads are not guaranteed for zero air leakage (vacuum holding).

⚠Caution

1. Mounting the suction filter

Because the suction of vacuum equipment acts not only on workpieces but also on dust or water droplets in the surrounding atmosphere, steps must be taken to prevent their penetration into the equipment's interior. Even when using equipment equipped with filters, if there is a considerable amount of dust in the environment, use a separately ordered large-size filter as well.
If there is a possibility of water droplets being sucked in by the vacuum, use a drain separator for vacuum.

2. The maximum vacuum pressure of the vacuum ejector is affected by the atmospheric pressure of the operating environment.

As atmospheric pressure changes based on altitude, climate, etc., the actual maximum vacuum pressure may not reach the value listed in the specifications.

3. For information on related items, such as directional control equipment and actuators, refer to the caution sections in each respective catalog.

4. Do not use the product in an environment that exposes it to vibration. If the product is used in such an environment, we can offer a lock nut type product to prevent it from loosening. Please contact SMC for the part number.

5. Foreign matter may get inside the pad.

Although SMC gives full attention to prevent foreign matter from getting inside the product during pad molding, it is difficult to remove foreign matter from the molded product completely. Therefore, products with imperceptible, fine foreign matter are determined as acceptable and shipped to customers.

Vacuum Equipment Precautions 2

Be sure to read this before handling products.

Design/Selection

⚠Caution

6. There is a possibility of crystallized white powder or exuded liquid forming on the rubber surface.

The crystallized powder is called bloom, and the exuded liquid is called bleed. Bloom and bleed do not affect product operation. This phenomenon is caused by rubber compounding agents, such as a vulcanizing agent, antioxidants, oxidation inhibitors, softeners, parting agents, etc., and differs depending on the rubber material. As this phenomenon is influenced by changes in the environment (temperature differences, light (fluorescent light), humidity, etc.), the occurrence time cannot be estimated.

Mounting

⚠Warning

1. Operation manual

Install the products and operate them only after reading the operation manual carefully and understanding its contents. Also, keep the manual where it can be referred to as necessary.

2. Ensure sufficient space for maintenance activities.

When installing the products, allow access for maintenance and inspection.

3. Tighten threads with the proper tightening torque.

When installing the products, follow the listed torque specifications.

4. Be sure to secure the product in place when mounting the pad.

Not securing it firmly into place may cause problems.

5. Use caution when implementing rotating transfer with a pad or when using workpieces and pads with a deviation in the center of the suction position.

Screw looseness due to rotation and pad rotation may cause problems. Apply a screw lock agent as necessary.

6. Avoid operation in a rotational direction by using the ball joint pad mechanism.

Wear may cause problems.

7. A buffer is used to decrease the load applied to the pad (horizontal lifting).

A malfunction may occur when the buffer is used for inclined or vertical lifting.

8. After the stroke, make sure that the buffer returns to the initial state before starting the next process.

Malfunctions may occur.

9. When pushing a pad to a workpiece, make sure not to apply an impact or a large force.

This will lead to premature deformation, cracking, or wearing of the pad. When pushing a pad onto a workpiece, operate within the deformable range of the pad skirt.

10. Do not obstruct the exhaust port of the ejector.

If the exhaust port is obstructed when mounted, a vacuum will not be generated. Also, do not obstruct the exhaust port with the goal of removing the workpiece. It may cause damage to the equipment.

Piping

⚠Caution

1. Refer to the Fittings and Tubing Precautions (Web Catalog) for handling One-touch fittings.

2. Preparation before piping

Before piping is connected, it should be thoroughly blown out with air (flushing) or washed to remove chips, cutting oil, and other debris from inside the pipe.

3. Winding of sealant tape

When screwing piping or fittings into ports, ensure that chips from the pipe threads or sealing material do not enter the piping. Also, if sealant tape is used, leave 1.5 to 2 thread ridges exposed at the end of the threads.

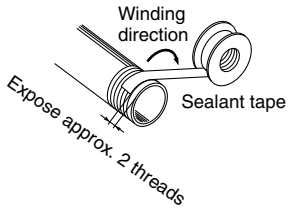

4. Use piping with adequate conductance.

Select equipment and piping for the vacuum side which has adequate conductance so that the ejector's maximum suction flow rate can be accommodated by the piping.
Also, make sure that there are no unnecessary restrictions, leaks, etc., along the course of the piping. Furthermore, the air supply should be designed while taking into consideration the ejector's maximum air consumption and the air consumption of other pneumatic circuits.

5. Avoid disorganized piping.

Piping which is direct and of the shortest possible length should be used for both the vacuum and supply sides. Disorganized piping should be avoided. Unnecessary length increases the piping volume, and thus increases the response time.

6. Use piping with large conductance on the exhaust side of the ejector.

If the exhaust piping is restrictive, there will be a decline in the ejector's performance.

7. Be certain that there are no crushed areas in the piping due to damage or bending.

Vacuum Release Flow Adjusting Needle

⚠Warning

1. The pressure and flow rate of the vacuum release air to be output varies depending on the supply pressure, needle opening, and difference between the vacuum ejector system and the vacuum pump system. Conduct appropriate adjustments with the adjusting needle mounted on the actual machine while checking the effects on the workpiece.

2. To adjust the flow rate, turn the adjusting needle to the right (clockwise) to decrease the flow rate, and turn it to the left (counterclockwise) to increase the flow rate.

Vacuum Equipment Precautions 3

Be sure to read this before handling products.

Air Supply

⚠Warning

1. Type of fluids

Be sure to use compressed air for the fluid. Please consult with SMC when using the product in applications other than compressed air.

Additionally, use purified compressed air, from which the water contents, oil contents, and drains have been removed completely.

2. Control of supply air

Compressed air containing a large amount of water content, oil content, drain, etc., may cause the pneumatic equipment to malfunction. So, install an air filter, air dryer, or a mist separator. (A system with a quality grade of No. C, D, or higher in the air preparation equipment model selection guide of Best Pneumatics No. 6 is recommended.)

Additionally, when applying oil to compressed air that is used for directional control equipment or actuators, install piping separately so that air is supplied to the vacuum equipment before the oil is applied.

If oil flows into the vacuum ejector/vacuum pump system, the silencer, nozzle, or filter may be clogged, causing reduced performance.

3. Drain flushing

If drain in the air filter or mist separator is not removed, the drain flows from the outlet, causing the pneumatic equipment to malfunction.

If drain flushing is deemed difficult, it is recommended to use a product with an auto drain option. For details about compressed air quality, refer to the SMC Best Pneumatics No. 6 catalog.

4. Use clean air.

Do not use compressed air that contains chemicals, synthetic oils that include organic solvents, salt contents, corrosive gases, etc. This may cause the product to break or malfunction.

Operating Environment

⚠Warning

1. Do not use in an atmosphere containing corrosive gases, chemicals, sea water, water, water steam, or where there is direct contact with any of these.

2. Do not use in a place subject to heavy vibration and/or shock.

3. Do not use in an environment where flammable gas or explosive gas exists. Usage may cause a fire or explosion. The products do not have an explosion-proof construction.

4. The product should not be exposed to prolonged sunlight. Use a protective cover.

5. Remove any sources of excessive heat.

6. In locations where there is contact with spatter from water, oil, solder, etc., take suitable protective measures.

7. In cases where the vacuum unit is surrounded by other equipment, etc., or the unit is energized for an extended time, take measures to exhaust excess heat so that the temperature remains within the specifications.

Operating Environment

⚠Caution

1. Under certain conditions, the exhaust of the vacuum ejector may generate intermittent noises, and vacuum pressure may be uneven.

Using the ejector under these conditions will not result in decreased performance, but if the intermittent noise becomes a nuisance, or there is an adverse effect on the operation of the vacuum pressure switch, try lowering or raising the supply pressure of the vacuum ejector to find a supply pressure level at which the intermittent noise ceases.

Maintenance

⚠Warning

1. Perform maintenance and inspection according to the procedures indicated in the operation manual.

If handled improperly, malfunction or damage of machinery and equipment may occur.

2. Maintenance work

If handled improperly, compressed air can be dangerous. Assembly, handling, repair, and element replacement of pneumatic systems should be performed by a knowledgeable and experienced person.

3. Drain flushing

Remove drainage regularly from the water separator, air filters, drain separator for vacuum, etc.

4. Removal of equipment, and supply/exhaust of compressed air

Before components are removed, first confirm that measures are in place to prevent workpieces from dropping, run-away equipment, etc. Then, cut off the supply pressure and electric power, and exhaust all compressed air from the system using the residual pressure release function.

When machinery is restarted after remounting or replacement, first confirm that measures are in place to prevent the lurching of actuators, etc. Then, confirm that the equipment is operating normally.

5. Perform maintenance of suction filters and silencers periodically.

The performance of an ejector will deteriorate due to clogged filters and silencers. High-flow filters should be used, especially in dusty locations.

6. Leakage or clogging of the air pressure circuit, wear, cracks, or deterioration of the pad, or buffer sliding failure (wear, galling, or other failure of the sliding parts) may lead to problems. Make sure to perform periodic maintenance and inspection.

7. When adsorbing a deformed or spherical workpiece, it is necessary to push the pad against it.

Even if the workpiece can be adsorbed in the initial operation, deformation, cracks, or wear of the pad may occur prematurely, causing problems. Make sure to perform periodic maintenance and inspection.

Vacuum Pads Precautions

Be sure to read this before handling products.

Design

⚠Warning

1. In cases where the workpieces are heavy or dangerous objects, etc., take measures to address a possible loss of adsorption force (installation of a drop prevention guide, etc.).

In the case of transportation by vacuum adsorption using vacuum pads, the adsorption force is lost when there is a drop in vacuum pressure. Furthermore, since vacuum pressure can also deteriorate due to the wear and cracking of pads, vacuum leakage from piping, etc., be certain to perform maintenance on vacuum equipment.

Selection

⚠Caution

1. The pad materials which can be used differ depending upon the operating environment.

An appropriate pad material should be selected.
Furthermore, since vacuum pads are manufactured for use with industrial products, they should not come into direct contact with medicines, food products, etc.

2. Depending upon the weight and shape of the workpieces, the diameter, quantity, and shape of pads suitable for use will vary.

Use the pad lifting force table for reference.
Also, the selectable pads will differ based upon conditions other than the above, such as the condition of the workpiece surface (presence or absence of oil or water), the workpiece material, and its gas permeability. Confirmation is necessary by actually performing vacuum adsorption on the subject workpieces.

3. Use a buffer for the adsorption of fragile workpieces.

The cushioning performed by the buffer is also necessary when there is variation in the height of workpieces. If further positioning of the pads and workpieces is required, a non-rotating buffer can be used.

4. The life of the buffer will be reduced if lateral force is applied to the buffer shaft.

Note that sometimes a load is applied to the buffer by a piping tube (pulling, pressing, etc. in a lateral direction).

5. Do not apply an impact or large force to a pad when adsorbing a workpiece.

This will cause the deformation, cracking, and wear of the pad to be accelerated. The stiffening ribs, etc., should touch lightly, while staying within the pad skirt's deformation range. Positioning should be performed accurately, especially in the case of small-diameter pads.

6. When transporting vertically, factors such as acceleration, wind pressure, and impact force must be considered in addition to the workpiece weight.

Use caution particularly when lifting items such as glass plates and circuit boards because a large force will be applied by wind pressure. When a workpiece which is oriented vertically is transported horizontally, large forces are applied by acceleration when movement is started and stopped. Furthermore, in cases where the pad and workpiece can slip easily, accelerations and decelerations of horizontal movement should be kept to a minimum.

7. When transporting flat shaped workpieces that have large surface areas using multiple pads, care must be taken in arranging the pads, so that the workpieces are evenly adsorbed.

8. Use caution since the workpiece could rotate during transfer.

Use of more than one pad for each workpiece is recommended.

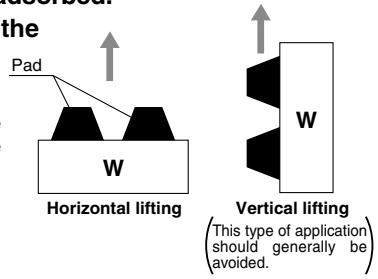

Maintenance

⚠Caution

1. Perform pad maintenance regularly.

Since pads are essentially rubber, deterioration is unavoidable. The rate of deterioration depends upon factors such as conditions of use, environment, and temperature. Regular maintenance should be performed. If any damage, splitting, cracking, or abrasion has occurred in a pad, replace it immediately.
Also, take care not to damage the outside of the pad.

Storage

⚠Caution

1. It is recommended to store vacuum pads in the environment shown in the table below.

Storing in an environment other than that recommended below may lead to changes in properties (deformation, discoloration, cracking, increased adhesiveness, etc.).

Table 1. Recommended Storage Environment for Vacuum Pads

Temperature	15 to 25 [°C]
Humidity	50[%] or less, No condensation
Other	Location that is shaded from direct sunlight or fluorescent light Location without the presence of ozone (For NBR and conductive NBR)

Vacuum Pads

Basic Pad **ZP** Series

Compact Type **ZP3** Series

Oval Pad **ZP/ZP2** Series

High Rigidity Pad **ZP3E** Series

Pads for Special Applications

SMC Corporation

Akihabara UDX 15F,
4-14-1, Sotokanda, Chiyoda-ku, Tokyo 101-0021, JAPAN
Phone: 03-5207-8249 Fax: 03-5298-5362
https://www.smcworld.com
© 2019 SMC Corporation All Rights Reserved

Specifications are subject to change without prior notice
and any obligation on the part of the manufacturer.

D-G

1st printing XU printing XU 13800SZ Printed in Japan.