No.HRX-OM-T002-H

Operation Manual
Installation･Operation

Original Instructions

Thermo chiller

HRS090-A*-20 ***HRS090-W*-20***

HRS090-A*-40 CE ***HRS090-W*-40-*** CE

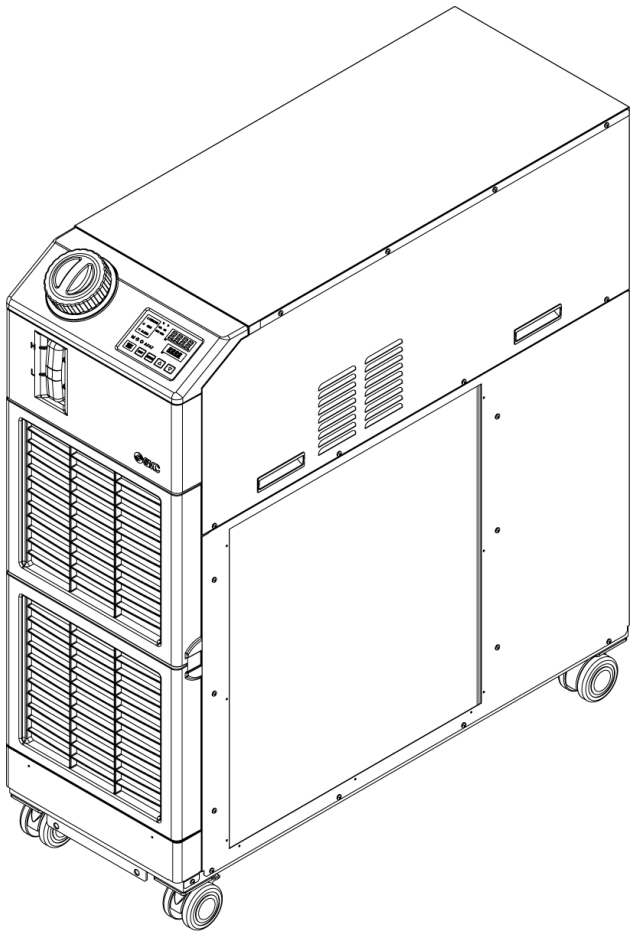

Keep this manual available whenever necessary

© 2019 SMC CORPORATION All Rights Reserved

To the users

Thank you for purchasing SMC's Thermo chiller (hereinafter referred to as the "product").

For safety and long life of the product, be sure to read this operation manual (hereinafter referred to as the "manual") and clearly understand the contents.

- Be sure to read and follow all instructions noted with "Warning" or "Caution" in this manual.
- This manual is intended to explain the installation and operation of the product. Only people who understand the basic operation of the product through this manual or who perform installation and operation of or have basic knowledge about industrial machines are allowed to work on the product.
- This manual and other documents attached to the product do not constitute a contract, and will not affect any existing agreements or commitments.
- It is strictly prohibited to copy this manual entirely or partially for the use by a third party without prior permission from SMC.

Note: This manual is subject to possible change without prior notice.

Contents

Chapter 1 Safety Instructions 1-1
1.1 Before using the product 1-1
1.2 Reading the Manual 1-1
1.3 Hazards 1-2
1.3.1 Level of hazards 1-2
1.3.2 Definition of “Serious injury” and “Minor injury” 1-2
1.4 Product Label 1-3
1.5 Safety Measures 1-4
1.5.1 Safety Instructions for Use 1-4
1.5.2 Personal protective equipment 1-4
1.6 Emergency Measures 1-5
1.7 Waste disposal 1-5
1.7.1 Disposal of refrigerant and compressor oil 1-5
1.7.2 Disposal of product 1-5
1.8 Material Safety Data Sheet (MSDS) 1-6
Chapter 2 Name and Function of Parts 2-1
2.1 Model number of product 2-1
2.2 Name and Function of Parts 2-2
2.2.1 HRS090-A∗-20 (In case of air cooled type) 2-2
2.2.2 HRS090-W∗-20 (In case of water cooled type) 2-3
2.3 Function of Parts 2-4
2.4 Operation display panel 2-5
Chapter 3 Transport and Setting Up 3-1
3.1 Transport 3-1
3.1.1 Transportation using forklift and hanging 3-2
3.1.2 Transportation using casters 3-3
3.2 Installation 3-4
3.2.1 Environment 3-4
3.2.2 Location 3-6
3.2.3 Installation and Maintenance Space 3-8
3.3 Installation 3-9
3.3.1 Installation 3-9
3.3.2 Electrical wiring 3-12
3.3.3 Preparation and wiring of power supply cable 3-14
3.3.4 Contact input/output communicatin wiring 3-19
3.3.5 Wiring of run/stop signal input･Remote signal input 3-20
3.3.6 Wiring of external switch signal input 3-22
3.3.7 Wiring of contact output signal 3-25
3.3.8 RS-485 communication wiring 3-26

3.3.9 RS-232C communication wiring 3-27
3.4 Piping 3-28
3.5 Circulating Fluid Supply 3-31
3.6 Option J Piping of【Automatic fluid filling】 3-33
Chapter 4 Starting the Product 4-1
4.1 Before Starting 4-1
4.2 Preparation for Start 4-2
4.2.1 Power supply 4-2
4.2.2 Option B [Earth leakage breaker], HRS090-∗∗-40-∗ 4-2
4.2.3 Setting of circulating fluid temperature 4-3
4.3 Preparation of circulating fluid 4-4
4.4 Operation Start and Stop 4-7
4.4.1 Starting the product 4-7
4.4.2 Stopping the product 4-8
4.5 Check items during startup 4-9
4.6 Adjustment of Circulating Fluid flow rate 4-9
Chapter 5 Display and setting of various functions 5-1
5.1 List of function 5-1
5.2 Function 5-2
5.2.1 Key operations 5-2
5.2.2 List of parameters 5-4
5.3 Main Display 5-7
5.3.1 Main Display 5-7
5.3.2 Items on the main display 5-7
5.4 Alarm Menu 5-8
5.4.1 Alarm menu 5-8
5.4.2 Items shown on the alarm menu display 5-8
5.5 Check monitor menu 5-9
5.5.1 Check monitor menu 5-9
5.5.2 Checking with the Inspection monitor menu 5-9
5.6 Key-lock 5-13
5.6.1 Key-lock 5-13
5.6.2 Key-lock setting / checking 5-14
5.7 Run timer, stop timer function 5-15
5.7.1 Run timer and stop timer function 5-15
5.7.2 Setting and checking of Run timer and stop timer function 5-17
5.8 Ready completion (TEMP READY) signal 5-19
5.8.1 Ready completion (TEMP READY) signal 5-19
5.8.2 Ready completion (TEMP READY) signal setting / checking 5-20
5.9 Offset function 5-22

5.9.1 Offset function 5-22
5.9.2 Usage example of offset function 5-23
5.9.3 Setting/checking of offset function 5-25
5.10 Operation Restoration after Power Failure 5-27
5.10.1 Operation restoration function after power failure 5-27
5.10.2 Setting/checking of the operation restoration function 5-28
5.11 Anti-freezing function 5-29
5.11.1 Anti-freezing function 5-29
5.11.2 Setting/checking of anti-freezing function 5-31
5.12 Key Operation Sound Setting 5-32
5.12.1 Key operation sound setting 5-32
5.12.2 Setting/checking of the button operation sound 5-32
5.13 Temperature unit Change 5-33
5.13.1 Temperature unit change 5-33
5.13.2 Setting/checking of temperature unit change 5-33
5.14 Pressure unit Change 5-34
5.14.1 Pressure unit change 5-34
5.14.2 Setting/checking of pressure unit change 5-34
5.15 Data reset function 5-35
5.15.1 Data reset function 5-35
5.15.2 How to operate reset function 5-35
5.16 Accumulated Operating Time Reset Function 5-36
5.16.1 Accumulated operating time reset function 5-36
5.16.2 How to operate accumulated operating time reset function 5-36
5.17 Warming up function 5-40
5.17.1 Warming up function 5-40
5.17.2 Setting/checking of warming up function 5-41
5.18 Alarm buzzer sound setting 5-43
5.18.1 Alarm buzzer sound setting 5-43
5.18.2 Setting/checking of alarm buzzer sound 5-43
5.19 Alarm customizing function 5-44
5.19.1 Alarm customizing function 5-44
5.19.2 Setting and checking of the alarm customizing function 5-49
5.19.3 Setting of temperature alarm monitoring method and alarm generation timing 5-63
5.20 Communication function 5-71
5.20.1 Communication function 5-71
5.20.2 Setting/checking of communication function 5-71
Chapter 6 Option 6-1
6.1 Option M [DI water (Pure water) piping] 6-1
6.1.1 Option M [DI water (Pure water) piping] 6-1

6.2 Option J [Automatic fluid filling] 6-2
6.2.1 Option J [Automatic fluid filling] 6-2
Chapter 7 Alarm Notification and Troubleshooting 7-1
7.1 Alarm Notification 7-1
7.2 Alarm buzzer stop 7-3
7.3 Troubleshooting 7-4
7.3.1 Alarm contents, causes, and troubleshooting 7-4
7.3.2 How to release the thermal relay trip and circuit protector 7-8
7.3.3 How to release the pump thermal trip 7-10
7.4 Other Errors 7-12
Chapter 8 Control, Inspection and Cleaning 8-1
8.1 Quality Control of Circulating Fluid and Facility Water 8-1
8.2 Inspection and Cleaning 8-2
8.2.1 Daily check 8-2
8.2.2 Monthly check 8-3
8.2.3 Inspection every 3 months 8-4
8.2.4 Inspection every 6 months 8-6
8.2.5 Inspection during winter season 8-7
8.3 Consumables 8-7
8.4 Operation Stop for an Extended Period of Time 8-8
8.4.1 Discharge of the circulating fluid 8-8
8.4.2 Discharge of the facility water (Water-cooled type) 8-10
Chapter 9 Documents 9-1
9.1 Specifications 9-1
9.1.1 HRS090-A∗-20∗ 9-1
9.1.2 HRS090-A∗-40∗ 9-2
9.1.3 HRS090-W∗-20∗ 9-3
9.1.4 HRS090-W∗-40∗ 9-4
9.1.5 Refrigerant with GWP reference 9-5
9.1.6 Communication specification 9-5
9.2 Outline dimensions 9-6
9.2.1 HRS090-A∗-20/40∗ 9-6
9.2.2 HRS090-W∗-20/40∗ 9-7
9.3 Flow diagram 9-8
9.3.1 HRS090-A∗-20/40∗ 9-8
9.3.2 HRS090-W∗-20/40∗ 9-8
9.4 Cooling capacity 9-9
9.4.1 HRS090-A∗-20/40∗ 9-9
9.4.2 HRS090-W∗-20/40∗ 9-9
9.5 Pump capacity 9-10

9.5.1 HRS090-A/W∗-20/40∗ 9-10
9.6 Types of hazard labels 9-11
9.6.1 Locations of Hazard Labels 9-12
9.7 Compliance standard 9-13
9.8 Sample DoC. 9-14
9.9 Daily Check Sheet 9-16
Chapter 10 Product Warranty 10-1

Chapter 1 Safety Instructions

Before using the product be sure to read and understand all the important actions highlighted in this manual.

1.1 Before using the product

- This chapter is intended to specifically describe the safety related issues for handling the product. Read this before handling the product.
- The product is a cooling device using circulating fluid. SMC does not take any responsibility for any problems that may arise from using the product for other purposes.
- This product is not designed for a clean room. It generates dust from the internal components such as pump and fan motor.
- The product is operated at high voltage and contains components which become hot and rotate. If a component needs to be replaced or repaired, contact a specialized vendor for parts and service.
- All personnel who work with or around the product should read and understand the safety related information in this manual carefully before starting work.
- The safety manager is responsible for strictly observing safety standards, but responsibility in respect to safety standards during daily work resides with each individual operator and maintainance personnel.
- **Do not use the materials that rust or corrode for the circulating fluid and facility water circuits.** Using the materials that tend to rust or corrode may cause clogs or/and leakages of the circulating fluid and facility water circuits. In case of using these kind of materials, consider and carry out some prevention against the rusting or corrosion by the customer side.
- This manual must be kept available to operators whenever necessary.

1.2 Reading the Manual

This manual contains symbols to help identify important actions when installing, operating or maintaining the product.

This sign indicates actions that must be followed.

This sign indicates prohibited actions.

1.3 Hazards

1.3.1 Level of hazards

The instructions given in this manual aim to assure the safe and correct operation of the product, and to prevent injury of operators or damage to the product. These instructions are grouped into three categories, Danger, Warning and Caution, which indicate the level of hazard, damage and also the degree of emergency. All safety critical information should be carefully observed at all times.

"DANGER", "WARNING" and "CAUTION" signs are in order according to severity (DANGER> WARNING> CAUTION).

⚠ DANGER

"DANGER": Hazard that WILL cause serious personal injury or death during operation.

⚠ WARNING

"WARNING": Hazard that MAY cause serious personal injury or death during operation.

⚠ CAUTION

"CAUTION": Hazard that MAY cause minor personal injury.

CAUTION

"CAUTION without exclamation symbol": Hazard that MAY cause damage or failure of the product, facility, devices, ect.

1.3.2 Definition of "Serious injury" and "Minor injury"

- **"Serious injury"**

  This term describes injuries that result in after effects including loss of eyesight, burns, electrical shock, fracture, poisoning, etc. and requires long-term treatment or hospitalization.

- **"Minor injury"**

  This term describes injuries that do not need long-term treatment or hospitalization. (Others excluded from serious injury.)

1.4 Product Label

Information about the product, such as Serial No. and Model No. can be found on the product label. This information is needed when contacting an SMC sales distributor.

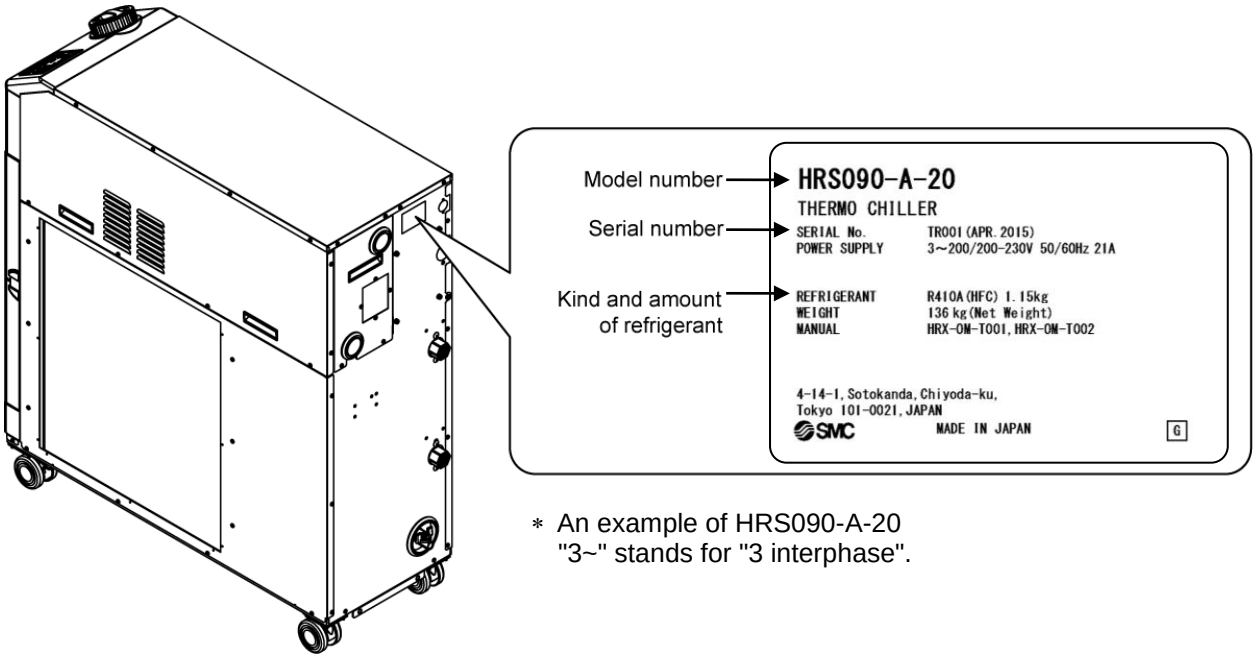

∗ An example of HRS090-A-20
"3~" stands for "3 interphase".

How to see the serial number **T O 001** （**January 2014**）

S			O			001
Year	Symbol	Remarks	Month	Symbol	Remarks	Serial no.
2015	T	Repeated from A to Z in alphabetical order	1	O	Repeated from O to Z in alphabetical order, with O for January and Z for December	—
2016	U		2	P		
2017	V		3	Q		
↓	↓		↓	↓		

Fig. 1-1 Position of the product label

1.5 Safety Measures

1.5.1 Safety Instructions for Use

⚠ WARNING

Follow the instructions below when using the product. Failure to follow the instructions may cause an accident and injury.

- Read and understand this manual carefully before using the product.
- Before starting maintenance of the product, be sure to lock out and tag out the breaker of the user's power supply.
- If operating the product during maintenance, be sure to inform all workers nearby.
- Use only the correct tools and procedure when installing or maintaning the product.
- Use personal protective equipment where specified (“1.5.2Personal protective equipment”)
- Check all parts and screws are fitted correctly and securely after maintenance.
- Avoid working in a drunken or sick condition, which might cause an accident.
- Do not remove the panels except for the cases permitted in this manual.
- Do not remove the panels during operation.
- Do not handle this product by any means other than specified in this Operation Manual; this can result in damage to the product or fire.

1.5.2 Personal protective equipment

This manual specifies personal protective equipment for each work.

■ Transport, Installing and Uninstalling

⚠ CAUTION

Always use safety shoes, gloves and head protection when transporting, installing or uninstalling the product.

■ Handling of circulating fluid

⚠ CAUTION

Always use safety shoes, gloves, mask, apron and eye protection when handling the circulating fluid.

■ Operation

⚠ CAUTION

Always use safety shoes and gloves when operating the product.

1.6 Emergency Measures

When emergency conditions such as natural disaster, fire, earthquake and injury occur, shut off the breaker of the user's power supply that supplies power to the product.

⚠ WARNING

Even when the power supply switch is turned off, some of the internal circuits are still energized, unless the user's power supply is shut off. Be sure to shut off the breaker of the user's power supply.

1.7 Waste disposal

1.7.1 Disposal of refrigerant and compressor oil

The product uses hydro fluorocarbon type refrigerant (HFC) and compressor oil. Comply with the laws and regulations in each country for the disposal of refrigerant and compressor oil. The type and quantity of refrigerant is described on the 1.4 Product Label.

If these fluids need to be recovered, read and understand the instructions below carefully. If there is any unclear point, contact an SMC's sales distributor.

⚠ WARNING

Only maintenance personnel or qualified people are allowed to open the cover panels of the product.
Do not mix the compressor oil with domestic waste for disposal. Also, the disposal of the waste must only be conducted by specific facilities that are permitted for that purpose.

⚠ WARNING

Comply with the laws and regulations in each country for the disposal of refrigerant and compressor oil.
The release of refrigerant in to the atmosphere is banned by law. Recover it with specific equipment and dispose of it correctly.
Only people who have sufficient knowledge and experience about the product and its accessories are allowed to recover the refrigerant and compressor oil.

1.7.2 Disposal of product

The disposal of the product must be handled by a specialized industrial waste disposal agency in accordance with local laws and regulations.

1.8 Material Safety Data Sheet (MSDS)

If the material safety data sheets of chemicals used in this product are needed, contact an SMC's sales distributor.

Any chemicals used by the user must be accompanied by an MSDS.

Chapter 2 Name and Function of Parts

2.1 Model number of product

The product can be ordered with the model number configured as shown below.
The product needs to be handled in different ways depending on the part number. Refer to “1.4 Product Label”and check the part number of the product.

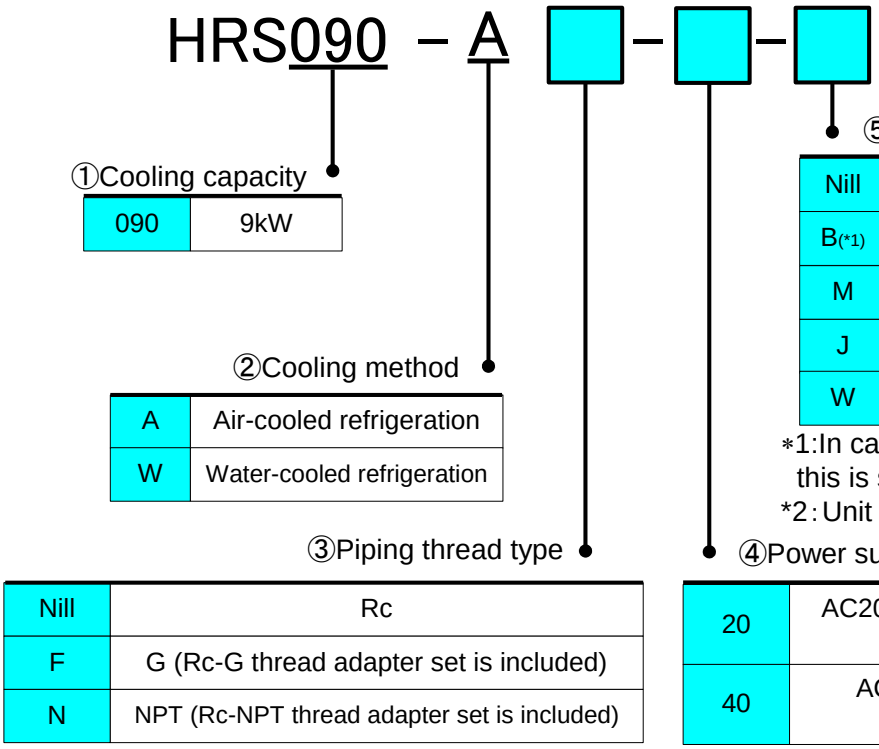

Fig. 2-1 Product model number

2.2 Name and Function of Parts

2.2.1 HRS090-A∗-20 (In case of air cooled type)

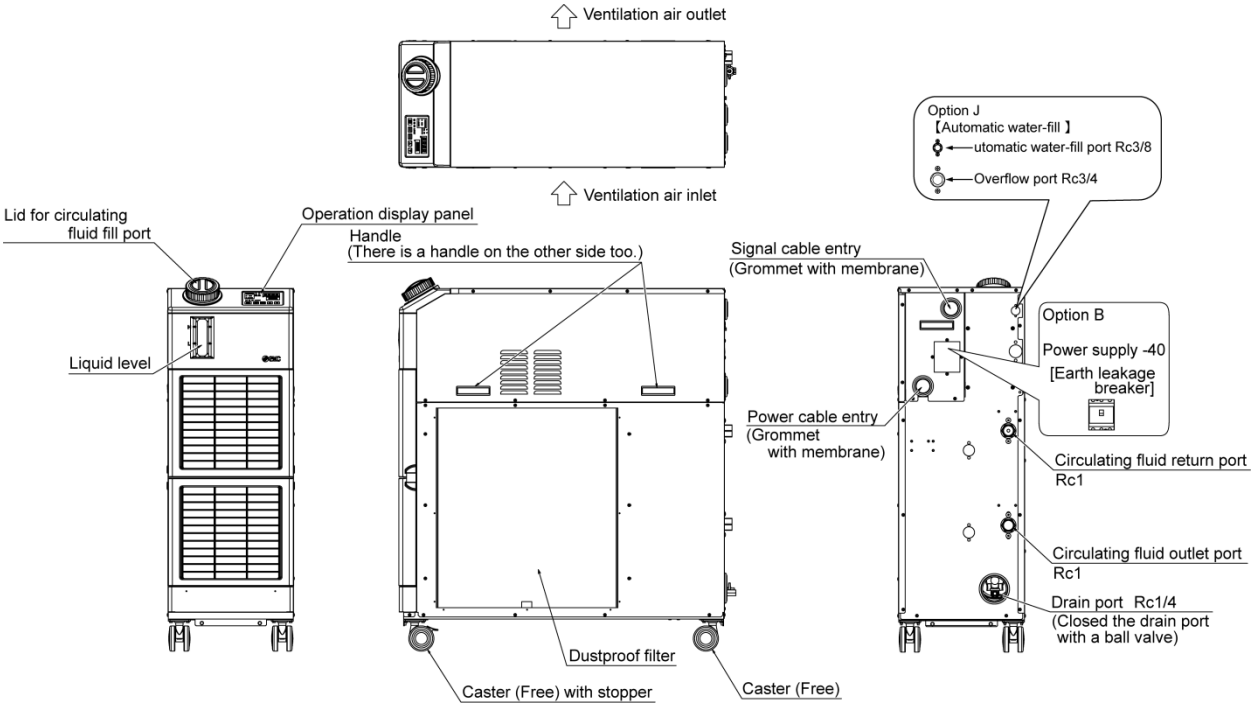

Fig. 2-2 Names of the parts (This drawing shows “HRS090-A-20”.)

Table 2-1 Accessory list

①	Alarm code list label	2pcs. (English 1pc. /Japanese 1pc.)	
②	Operation manual	2pcs. (English 1pc./Japanese 1pc.)	
③	Y strainer (40 meshes) 25A	1pc.	
④	Barrel nipple 25A	1pc.	
⑤	Anchor brackets ∗The anchor bolts are not attached	2pc.	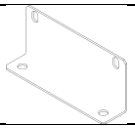
⑥	For HRS090-AF-∗∗ G thread adapter set (HRS-EP019)	1set	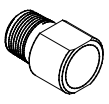
	For HRS090-AN-∗∗ NPT thread adapter set (HRS-EP018)	1set	
	For HRS090-AF-∗–J G thread adapter set (HRS-EP021)	1set	
	For HRS090-AN-∗–J NPT thread adapter set (HRS-EP020)	1set	

2.2.2 HRS090-W∗-20 (In case of water cooled type)

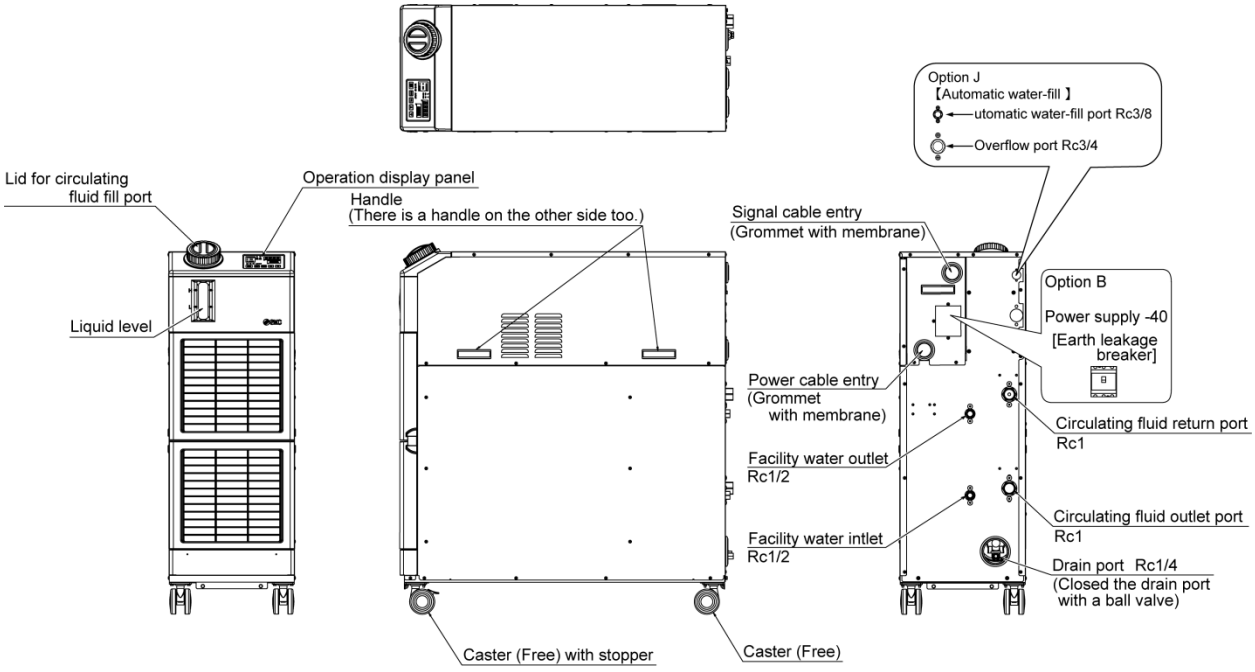

Fig. 2-3 Names of the parts (This drawing shows “HRS090-W-20”.)

Table 2-2 Accessory list

①	Alarm code list label	2pcs. (English 1pc. /Japanese 1pc.)	
②	Operation manual	2 Copies (English 1 copy/Japanese 1 copy)	
③	Y strainer (40 meshes) 25A	1pc.	
④	Barrel nipple 25A	1pc.	
⑤	Anchor brackets ∗The anchor bolts are not attached	2pc.	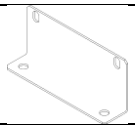
⑥	For HRS090-WF-∗∗ G thread adapter set (HRS-EP023)	1set	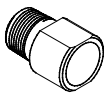
	For HRS090-WN-∗∗ NPT thread adapter set (HRS-EP022)	1set	
	For HRS090-WF-∗–J G thread adapter set (HRS-EP025)	1set	
	For HRS090-WN-∗–J NPT thread adapter set (HRS-EP024)	1set	

2.3 Function of Parts

The function of parts is as follows.

Table 2-3 Function of parts

Name	Function
Operation display panel	Runs and stops the product and performs settings such as the circulating fluid temperature. For details, refer to ”2.4 Operation display panel”.
Fluid level gauge	Indicates the circulating fluid level of the tank. Confirm the level is between HIGH and LOW. For details, refer to “3.5Circulating Fluid”.
Product label	Shows the product information such as model number and serial number. For details, refer to ‘’1.4 Product Label”.
Circulating fluid outlet port	The circulating fluid flows out from the outlet port.
Circulating fluid return port	The circulating fluid returns to the return port.
Drain port	This drain port to drain the circulating fluid out of the tank and the pump.
Automatic fluid fill port	Piping to the automatic fluid filling port enables easy supply of the circulating fluid through the ball tap in the reservoir.The supply pressure should be within the range of 0.2 to 0.5MPa.
Overflow port	Be sure to connect piping from this port to sump pit to discharge the exsess circulating fluid that caused by fluid level rising.
Dust-proof filter	Inserted to prevent that the dust and contamination are clung on the air cooled condensers directly. Clean the filter periodically. For details, prefer to “8.2.2Monthly check”.
Power cable entry	Insert the power cable to the power cable entry and connect it to the power terminal. For details, refer to “3.3.2Electrical wiring” and “3.3.3Preparation and wiring of power supply cable”.
Power terminal	
Signal cable entry	Insert the signal cable to the signal cable entry and connect it to the signal connectors. For details, refer to “3.3.5 Wiring of run/stop signal input・Remote signal input”, “3.3.6Wiring of external switch signal input”, “3.3.7Wiring of contact output signal”, “3.3.8RS-485 communication wiring” , “3.3.9RS-232C communication wiring or the Operation manual Communication function.
Signal connecors	
Earth leakage breaker (When option B [Earth leakage breaker]I is selected.	Shuts off the power supply to the internal eqipment of the product. (Parts energized remained in the product) Refer to “3.3.2Electrical wiring” for the earth leakage breaker.
Facility water inlet port	Supply facility water to the inlet port.
Facility water outlet port	Facility water is discharged from the outlet port and returns to the user’s facility water system.
Automatic water-fill port (When automatic fluid filling [Option J] is selected.)	Piping to the automatic fluid filling port enables easy supply of the circulating fluid through the built-in solenoid valve.The supply pressure should be in a range of 0.2 to 0.5MPa.
Overflow port (When automatic fluid filling [Option J] is selected.)	This is necessary when automatic fluid filling function.Discharge excess circulating fluid when the fluid level in the tank rises.

2.4 Operation display panel

The operation panel on the front of the product controls the basic operation of the product.

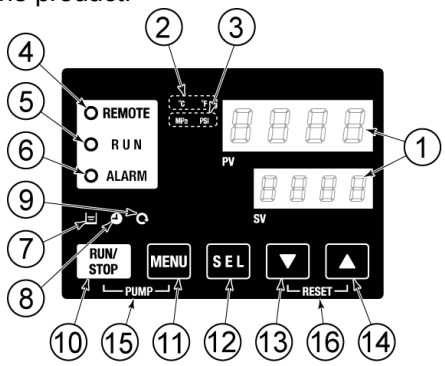

Fig. 2-4 Operation display panel

Table 2-4 Operation display panel

No	Description	Function		Reference page
①	Digital display (7 segment, 4 digits)	PV	Displays the temperature and pressure of the circulating fluid and alarm codes.	5.3
		SV	Displays the set temperature of the circulating fluid and the set values of other menus.	
②	[°C °F] light	Displays the unit of display temperature (°C or °F).		5.13
③	[MPa PSI] light	Displays the unit of display pressure (MPa or PSI).		5.14
④	[REMOTE] light	Turns on during remote operation by communication.		5.20
⑤	[RUN] light	・Turns ON when the product is started and in operation. Turns OFF when the product stops. ・Blinks during stand-by for stop (Interval 0.5 seconds). ・Blinks during independent operation of the pump (Interval 0.3 seconds). ・Blinks while the anti-freezing function is being set (During standby: Interval 2 seconds, During operation: Interval 0.3 seconds). ・Blinks during warming up function (During standby: Turns ON for 0.5 seconds and OFF for 3 seconds, During operation: Interval 0.3 seconds.)		4.4
⑥	[ALARM] light	Blinks with buzzer when alarm occurs (Interval 0.3 seconds).		5.4
		Blinks while AL25 is OFF (Turns ON for 0.5 seconds and OFF for 3 seconds.)		5.20
⑦	[ ] light	Turns ON when the fluid level lowers below “L” (low) level.		4.3
⑧	[ ] light	Turns ON while the run timer or stop timer function is working.		5.7
⑨	[ ] light	Turns ON when the product is in automatic operation.		5.10
⑩	[RUN/STOP] key	Makes the product start or stop.		4.4
⑪	[MENU] key	Moves from the main menu (display which shows circulating fluid temperature, pressure and etc.) to the other menus (entry of set values and monitor screen).		5.2
⑫	[SEL] key	Changes the item in menu and enters the set value.		
⑬	[▼] key	Decreases the set value.		-
⑭	[▲] key	Increases the set value.		
⑮	[PUMP] key	When the [MENU] and [RUN/STOP] buttons are held down simultaneously, the pump starts running independently.		4.3
⑯	[RESET] key	Press the [▼] and [▲] keys simultaneously. This will stop the alarm buzzer and turn off the [ALARM] light.		7.3
		Keep the [▼] and [▲] keys pressed down simultaneously for 3 seconds to reset AL46 and AL48.(After resetting AL48, WAIT(WAIT) will be displayed and the product cannot start running for 40 seconds. Restart 40 seconds later after resetting.		

Chapter 3 Transport and Setting Up

⚠ WARNING

- **Only persons who have sufficient knowledge and experience about the product and system are allowed to transport and set up the product.**
- **Especially pay attention to personal safety.**

3.1 Transport

The product is heavy and has potential danger at transport. Also, to prevent damage and breakage of the product, be sure to follow the instructions for shown below for transport.

⚠ WARNING

When moving the product by a folklift, insert the fork into the right psitions referring to 3.1.1
Moving by forklift and slinging should be done by persons who have the licenses.

⚠ WARNING

- **Be sure to use all the four eye bolts when sling the product.**
- **The slant angle of each rope should be 60 degrees oe less.**

CAUTION

Never lay the product on its side.
The compressor oil will leak in to the refrigerant piping, which may cause early failure of the compressor.

CAUTION

Drain the residual fluid from the piping as much as possible to prevent any spillage.

CAUTION

When the product is carried by using folklift, make sure that the folk dose not damage the cover panels and piping port.

3.1.1 Transportation using forklift and hanging

⚠ WARNING

The product are heavy object. (Refer to Table 3-1 Weight of the product) Moving by forklift and slinging should be done by persons who have the licenses.

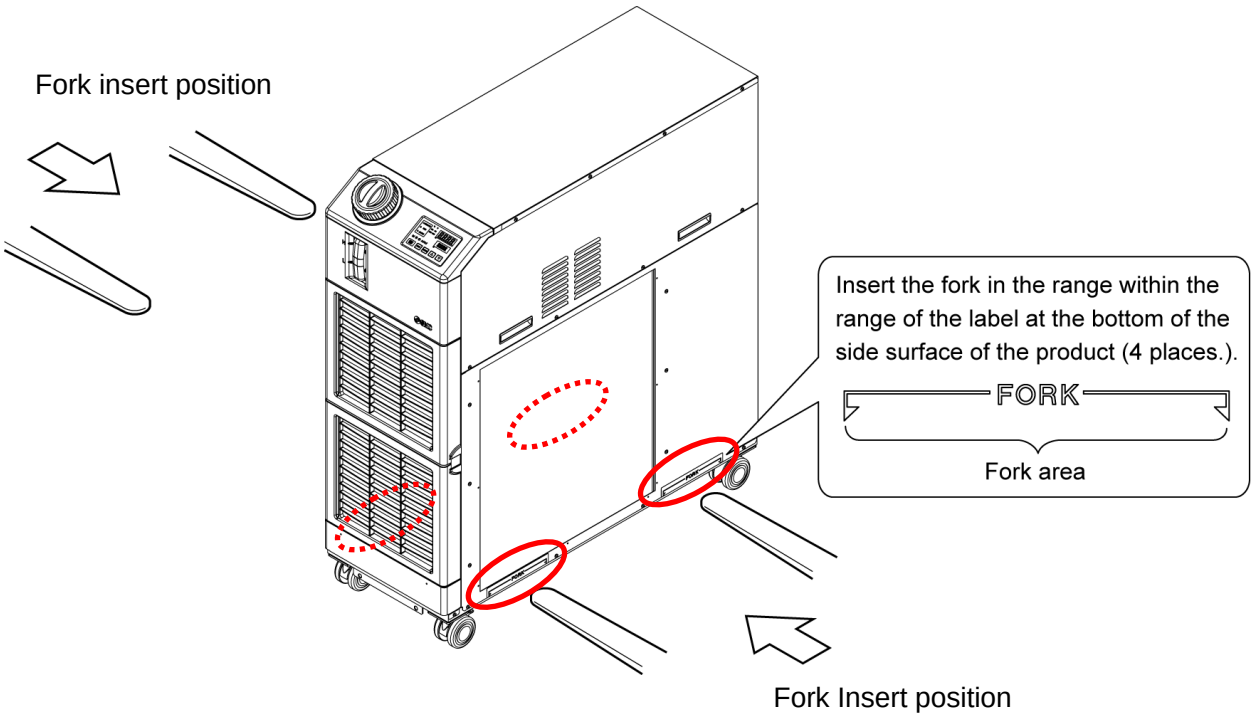

Fig 3-1 Fork inserting and hanging position (This drawing is [HRS090-A-20].)

Table 3-1 Weight of the product

Model	Weight kg
HRS090-A∗-20/40	Approx. 136
HRS090-W∗-20/40	Approx. 124

3.1.2 Transportation using casters

⚠ WARNING

This is a heavy object. (Refer to Table 3-1 Weight of the product).
Moving the product by casters should be done by 2 persons or more.

CAUTION

Raise the adjuster feet and push the corners of the product when moving the product using the casters.
Do not hold the piping connections or handles of the panels when moving by casters, or it may cause damage to the product.

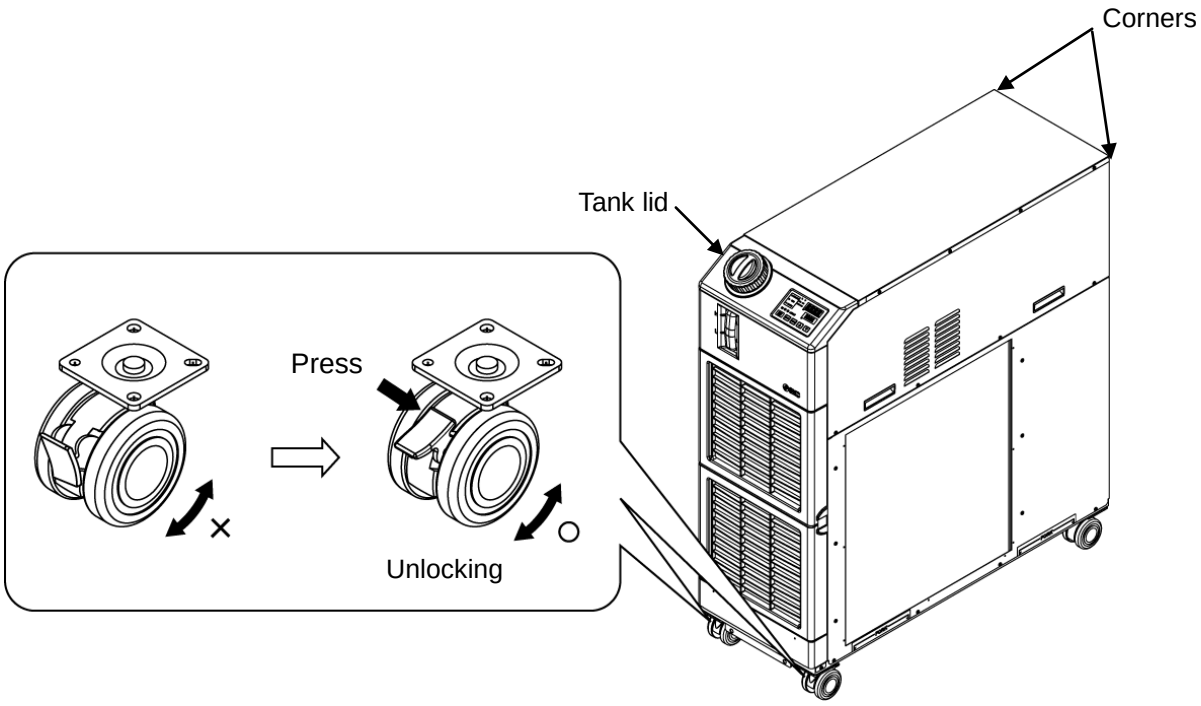

Fig. 3-2 Transportation using casters (This drawing is [HRS090-A-20].)

3.2 Installation

⚠ WARNING

Do not set up the product in places possibly exposed to leakage of flammable gas. Should any flammable gas stay around the product, the product may cause a fire.

⚠ CAUTION

- **Keep the product uplight on a rigid and flat floor which can resist the weight of the product, and take measures to prevent the product from tipping over. Improper installation may cause water leakage, tipping, damage of the product or injure the operator.**
- **Keep the ambient temperature of the product between 5 to 45°C. Operation out of this ambient temperature range may cause a malfunction of the product. Operating the product in an environment temperature of 45 °C may reduce the heat discharging efficiency of the heat exchanger and the safety device may function, resulting in the product operation stoppage.**
- **The installer/end user is responsible for carrying out a acoustic noise risk assessment on the equipment after installation and taking appropriate measures as required.**

3.2.1 Environment

The product must not be operated, installed, stored or transported in the following conditions. Potential malfunction or damage to the product may occur if these instructions are disregarded.

The product is not designed for clean room. The pump and ventilating fan inside the product generate particles.

- Outdoors
- Location that is exposed to steam, salt water or oil.
- Location that is exposed to dust or powder material.
- Location that is exposed to corrosive gas, organic solvent, chemical solution, or flammable gas (the product is not explosion-proof)
- Location where the ambient temperature is out of the following range:
  During transportation or storage: 0 to 50°C (No water or circulating fluid in the piping.)
  During operation: 5 to 45°C
- Location where condensation forms on the inside electrical parts.
- Location that is exposed to direct sunlight or heat radiation.
- Location that is near heat sources and poor in ventilation.
- Location that is subjected to abrupt changes in temperature.
- Location that is subjected to strong electromagnetic noise (intense electric field, intense magnetic field, or surges).

- Location that is subjected to static electricity, or conditions where static electricity can discharge to the product.
- Location that is subjected to strong high frequencies raditation (microwaves).
- Location that is subjected to potential lightening srtike.
- Location that is slanted.
- Location where the product is affected by strong vibrations or impacts.
- Condition that applies external force or weight causing the product to be damaged.
- Location without adequate space for maintenance as required.
- Refer to the below for product installation or operation in an environment temperature of 10 ^{o}C or less.
- Location at altitude of 3000m or higher (except during product storage and transport). Refer to the below for details.

■ Thermo-chiller installation in high altitude of 1000 meters or more

Because of lower air density, the heat radiation efficiencies of the devices in the product will be lower in the location at altitude of 1000m or higher. For this reason, the maximum ambient temperature for the thermo-chiller operation and the cooling capacity will be reduced.

For product installation at a place of high altitude of 1000 meters or more, select a thermo-chiller of the applicable capacity referring to the table below.

1. Max. ambient temp.: Use the product in lower ambient temperature than the described value at each altitude.
2. Cooling capacity correction coefficient: Coefficient to calculate the cooling capacity at each altitude

For the product operation at an altitude of 1800 meters,
"the cooling capacity at an altitude of 1800 meters" =
"the cooling capacity at an altitude of 1000 meter" x 0.8.

Altitude [m]	1. Max. ambient temp. [^{o}C]	2. Cooling capacity correction coefficient
Less than 1000m	45	1.00
1000 m or more - Less than 1500 m	42	0.85
1500m or more - Less than 2000m	38	0.80
2000m or more - Less than 2500m	35	0.75
2500m or more - Less than 3000m	32	0.70

■ Installation/Operation in an ambient temperature of 10 ^{o}C or less

Use ethylene glycol solution at a concentration of 15 % for the circulating fluid.

3.2.2 Location

CAUTION

Do not install in a location which can be subjected to any of the conditions in 3.2.1 Environment.

CAUTION

The air cooled product radiates heat from the air vent of the cooling fan. If the product is operated with insufficient air ventilation the internal temperature can exceed 45°C*, which can cause an affect the performance and life of the product. To prevent this ensure that suitable ventilation is available (see below).

■ Installation of multiple products

Keep sufficient space between products so that the air vented from one product will not be taken in by other products.

■ Installation at indoor site

1 In case of facility having a large installation area (that can vent the air naturally)
Make an air outlet on a wall at a high level and air inlet on a wall at a low level, to allow for adequate airflow.

2 In case of facility having a small installation area (that can not vent the air naturally)
Make a forced air exhaust vent on a wall at a high level and an air inlet on a wall at a low level.

3 Using duct to exhaust the air
In case the indoor site cannot accept the exhausted air from the product or/and is air conditioned, ventilate by installing a duct on the outlet ventilation of the product. Do not fasten the duct on the outlet ventilation of the product directly. Have the space at least the dust's diameter apart. Use a fan for the duct that considered the ventilation resistance of the duct.

Table 3-2 Amount of radiation and required ventilation

Model	Heat radiation kW	Required ventilation amount m^3/min	
		Differential temp. of 3 °C between inside and outside of installation area	Differential temp. of 6 °C between inside and outside of installation area
HRS090-A∗-20/40∗	Approx.17	290	145

CAUTION

**The water cooled product radiates heat to the facility water.
It is necessary to supply the facility water. Please prepare the facility water system that satisfies the heat radiation and the facility water specifications below.**

■ Required facility water system

Table 3-3 Heat radiation

Model	Heat radiation kW	Facility water specifications
HRS090-W∗-20/40∗	Approx. 17	Refer to [9.1 Specifications].

■ Installation environment specification

Sound noise: HRS090-A-20∗: 73dB (A)
HRS090-A-40*:75 dB (A)
HRS090-W-∗∗: 65dB (A)

∗Front 1m, height 1m, rated condition

3.2.3 Installation and Maintenance Space

It is recommended to keep the space around the product shown in Fig. 3-3.

⚠ CAUTION

Have an enough space for the ventilation for the product. Otherwise it may cause a lack of cooling capacity or/and stoppage of the product.
Have an enough space for maintenance.

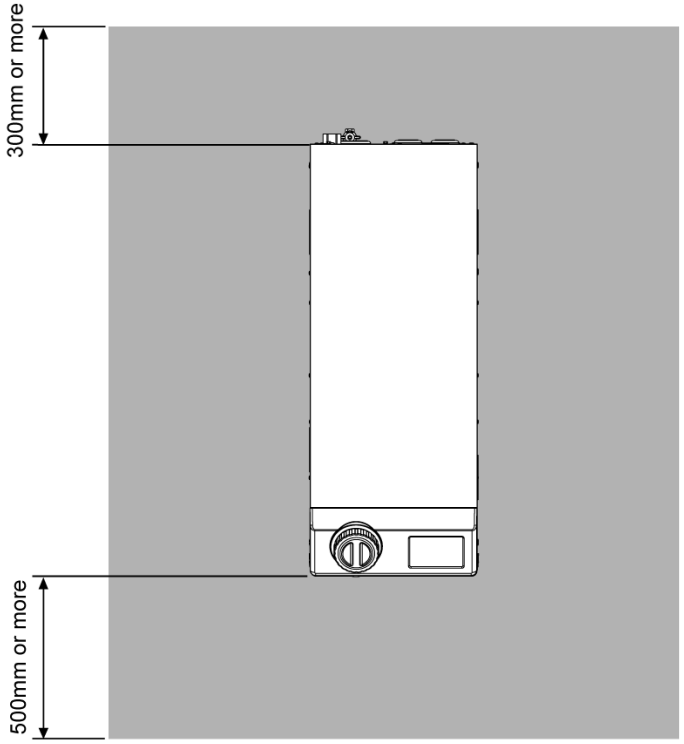

Top

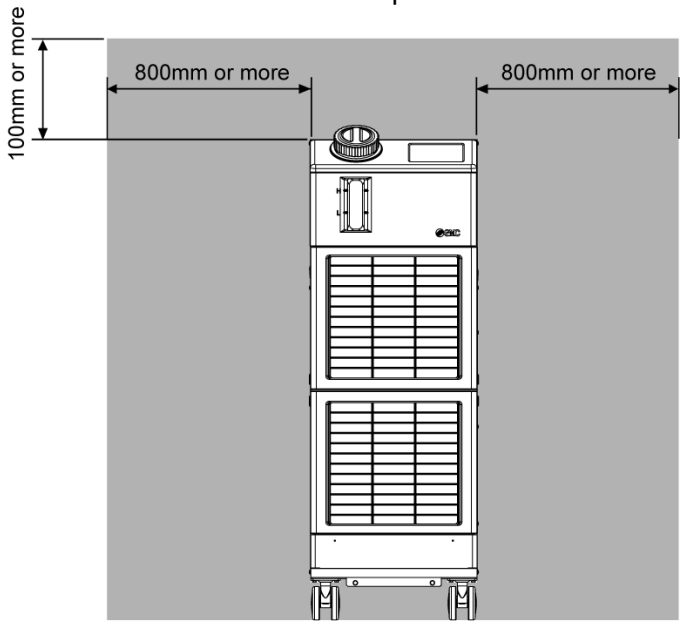

Front

Fig. 3-3 Installation space (This drawing is [HRS090-A-20].)

3.3 Installation

3.3.1 Installation

⚠ CAUTION

Install the product on the horizontal floor.
Prepare the M10 anchor bolts that are appropriate to the material of the floor that the product will be installed. Drive the anchor bolts at least at two places of the left and right side of the product (four places in total). Refer to the "9.2 Outline dimensions" for the dimensions for the position of the anchor bolts.

■ **How to mount the product**

1. Move the product to the installation area.
2. After moving, lock the front casters again.

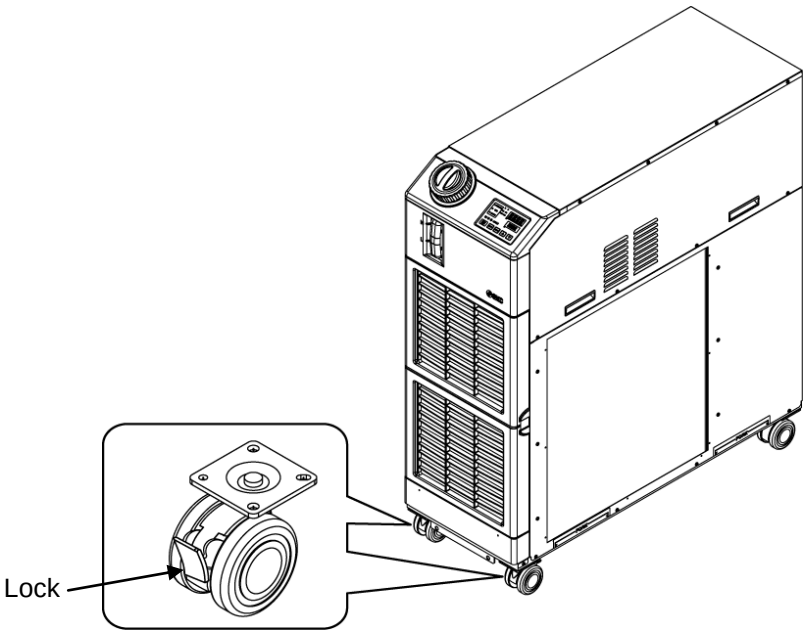

Fig. 3-4 Installation procedures (This drawing is [HRS090-A-20].)

■ Fixture

Use the fixtures and holding screws (for holding the product) fixed to the wooden box at the bottom of the product to fix the product to the floor using anchor bolts.

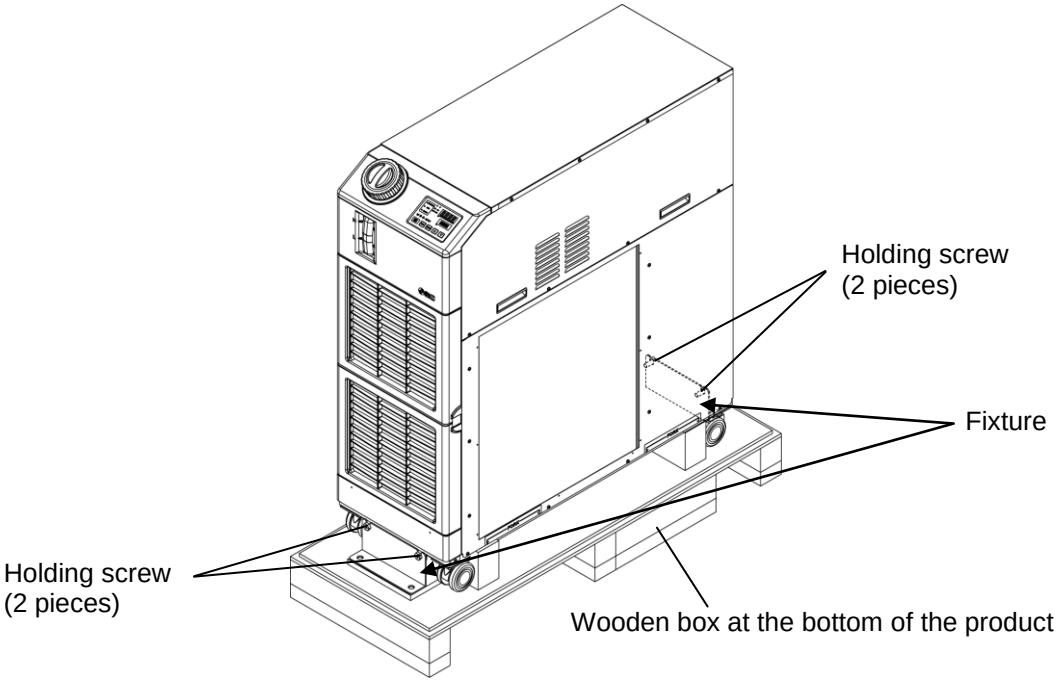

Fig. 3-5 Fixtures and holding screws (This drawing is [HRS090-A-20].)

1. Install anchor bolts on the levelled floor with dimensions below.

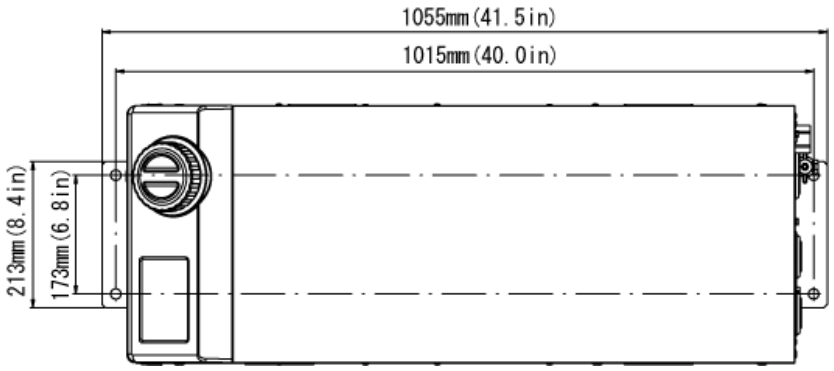

Fig. 3-6 Installation of anchor bolts

2. Set the fixture from the top of the anchor bolts.

3. Set hexagon screws to the anchor bolts and screw the holding screws into the product to settle the product to the floor. Fixture is mounted to the front and the rear surface of the product. (2 places)

【Tips】

SMC Foundations bolt set [IDF-AB500] (SUS M10x50mm) is applicable.

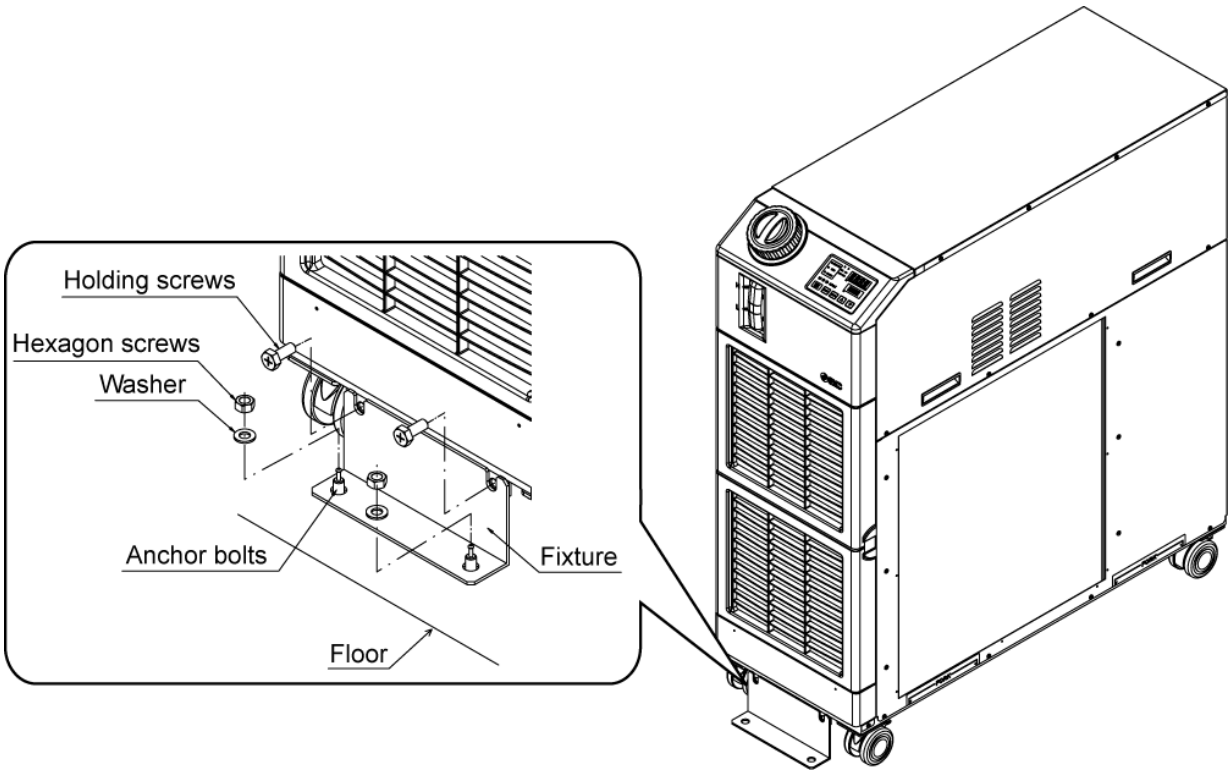

Fig. 3-7 Settlement to the floor (This drawing is [HRS090-A-20].)

3.3.2 Electrical wiring

⚠ WARNING

Do not modify the intenal electrical wiring of the product. Incorrect wiring may cause electrical shock or fire. Also, modifing the internal wiring will void the product's warranty.
NEVER connect the ground to water line, gas pipe or lightening conductor.

⚠ WARNING

- **The installation of electrical equipment and wiring work should be performed only by personnel with sufficient knowledge and experience.**
- **Be sure to shut off the user's power supply. Wiring with the product energized is strictly prohibited.**
- **The wiring must be conducted using cables complying with "Table 3-4" and firmly and secured to the product to prevent the external force of cables being applied to the terminals. Incomplete wiring or improper securing of wiring may cause electrical shock, excessive heat and fire.**
- **Ensure a stable power supply with no voltage surges.**
- **Ensure that an Earth Leakage Breaker is used in the power supply of the product. See "Table 3-4".**
- **Use a power supply suitable for the specifications of the product. Be sure to connect the ground connection.**
- **Ensure that a lock out facility is availble on the power supply.**
- **Each product must have its own separate Earth Leakage Breaker. Otherwise there can be a risk of electric shock or fire.**
- **Ensure that no harmonics are superimposed at power supply. (Do not use inverter etc.)**
- **Supply a steady power supply which is not affected by surges or distortion. In particular, if the voltage rate of increase (dv/dt) at zero crossing exceeds 40V/200µsec, it may cause malfunction.**

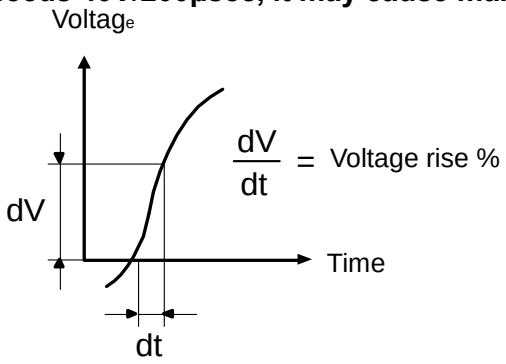

■ Power supply specifications, power supply cable and earth leakage breaker

Prepare the power supply shown in the following table. For the connection between the product and power supply, use the power supply cable and earth leakage breaker shown below. An earth leakage breaker must be mounted to a position where the breaker is easily accessible and close to the thermo-chiller.

Table 3-4 Power supply cable and Earth Leakage Breaker(Recommended)

Model	Power supply voltage	Terminal block screw diameter	Recommended crimp terminal	Cable qty. x size*2	Earth leakage breaker *1	
					Rated current [A]	Sensitivity of leak current [mA]
HRS090-A∗-20-∗ HRS090-W∗-20-∗	200/ 200-230VAC 50/60Hz 3phase	M5	R5.5-5	4 cores x AWG10 (4 cores x 5.5mm^2) *including ground	30	30
HRS090-A∗-40-∗ HRS090-W∗-40-∗	380-415VAC 50/60Hz 3phase				20	

*1: A specified earth leakage breaker is installed for option B [Earth leakage breaker] of each model.

If the product is not option B [Earth leakage breaker], please prepare an earth leakage breaker by the user's side.

A specified earth leakage breaker is installed for HRSH090- ∗-40-∗.

*2: Cable specifications are the examples when using the product at a continuous allowable operating temperature of 70 ^{o}C, with an operating voltage of 600 V and two kinds of plastic insulated wires at an ambient temperature of 30 ^{o}C. Please select the proper size of cables according to an actual condition.

3.3.3 Preparation and wiring of power supply cable

⚠ WARNING

- **The electrical facilities should be installed and wired in accordance with local laws and regulations of each country and by a person who has knowledge and experience.**
- **Check the power supply. Operation with voltages, capacities and frequencies other than the specified values can cause fire and electrical shock.**
- **Wire with an applicable cable size and terminal. Forcibly mounting with an unsuitable size cable may result in heat generation or fire.**

⚠ WARNING

Be sure to lock out and tag out the breaker of the facility power supply (customer power supply facility) before wiring.

⚠ WARNING

Be sure to connect the power supply cable from the product side first, and then connect the breaker of the facility power supply (the user's machine power supply).

⚠ CAUTION

When the panel is removed or mounted, be sure to wear protective shoes and gloves to prevent injury with the edge of the panel.

■ In case of option B [Earth leakage breaker]

CAUTION

A breaker that has the operating characteristic below is installed. Please use a breaker that has the same or longer operating time as/than this for the user's side (primary side). If it is a shorter operating time, there is a possibility of accidental breaker trip due to the internal motors' inrush currents of this product.

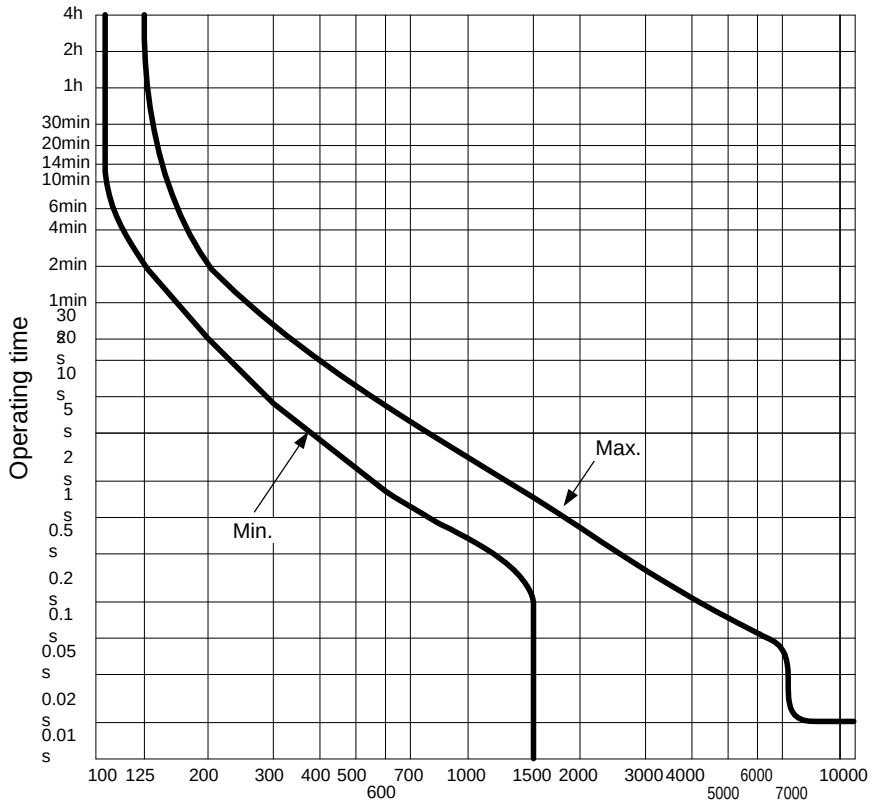

Breaker's operating characteristic

For HRS090-A/W-20

■ Preparation for operation

1. Remove 4 screws to remove the power supply terminal cover on the back of the product.

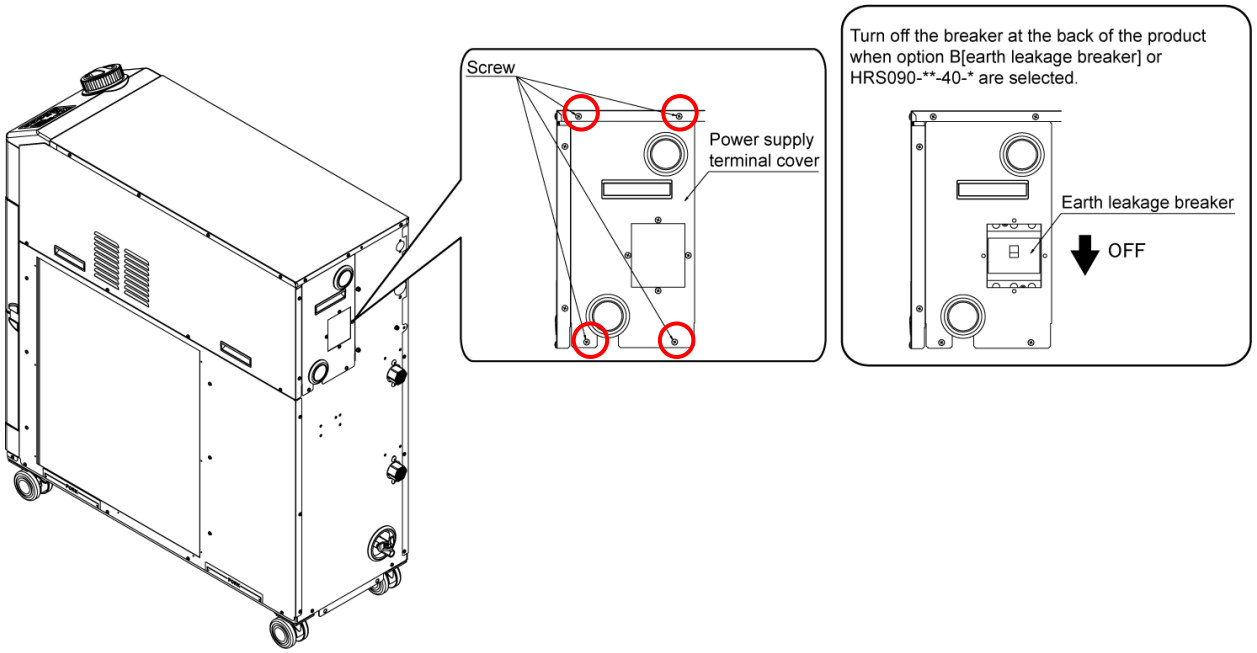

Fig. 3-8 Removal of power supply terminal cover

2. Hold the pull of the power supply terminal cover. Pull the bottom of the cover forward and remove it moving the cover downwards.

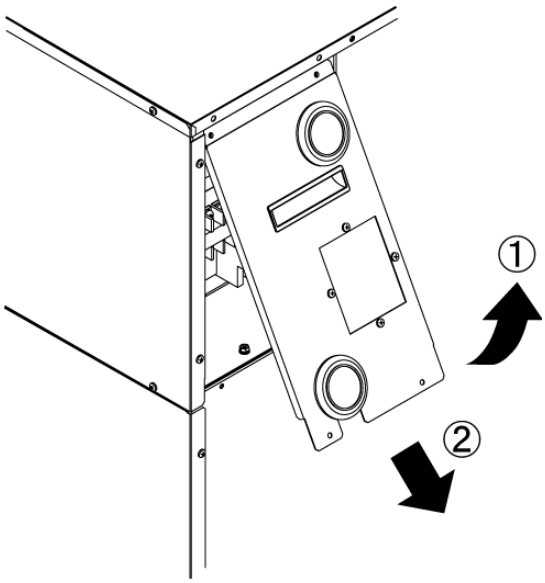

Fig. 3-9 Removal of power supply terminal cover

3. Insert the power supply cable and ground cable to the power supply cable entry of the power supply terminal cover (grommet with film).

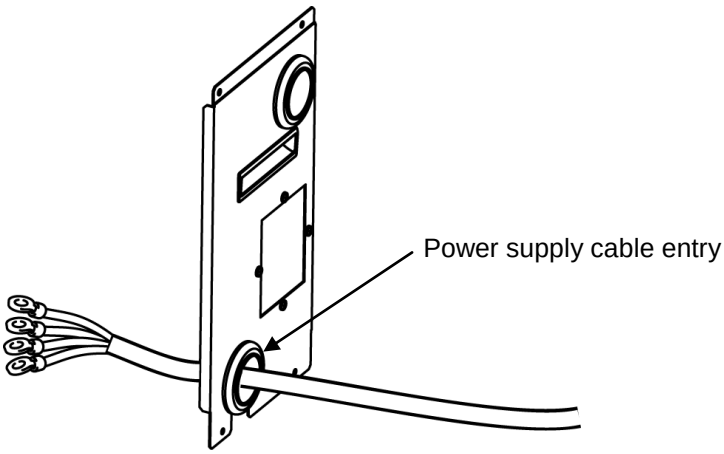

Fig. 3-10 Cable entry

4. Connect the power supply and the ground cable as shown in the figure below.

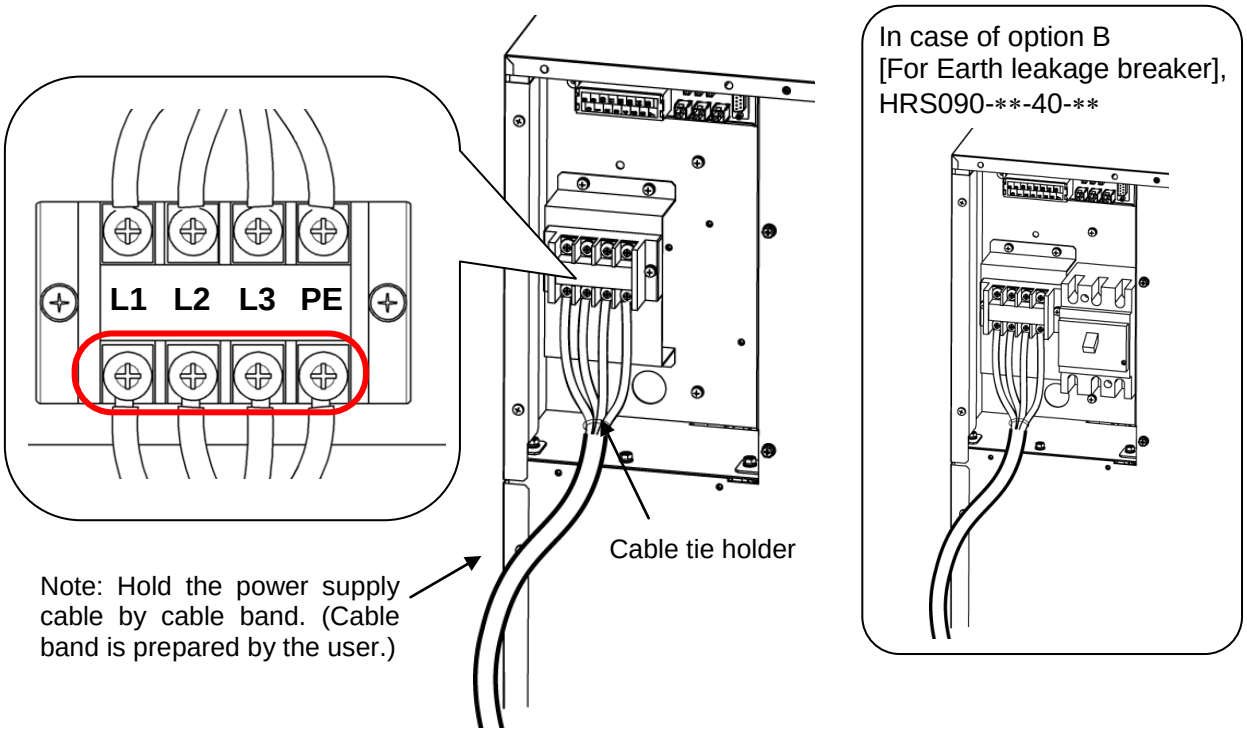

Fig. 3-11 Wiring of power supply cable

■ Mount the power supply terminal cover using 4 screws.

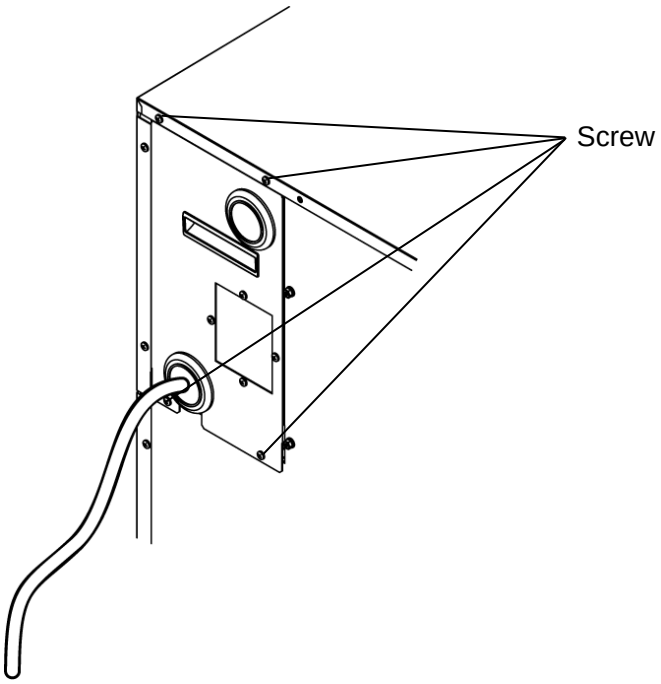

Fig. 3-12 Mounting of power supply terminal cover

3.3.4 Contact input/output communicatin wiring

⚠ WARNING

Be sure to lock out and tag out the breaker of the facility power supply (customer power supply facility) before wiring.

CAUTION

Use the cable and terminal that are specified.

The capacity of the output contact of the product is limited. If the capacity is not large enough, install a relay, etc. (to allow for larger capacity). Also, ensure that the input current of the relay is small enough in relation to the contact capacity of the product.

The product has a contact input/output communication function as shown below. Connect cables referring to the applicable chapter for each function. (For details of the functions, refer to Operation Manual Communication Function.)

- Run/stop input･Remote signal input (Refer to 3.3.5 Wiring of run/stop signal input･Remote signal input.)
- External switch signal input (Refer to 3.3.6 Wiring of external switch signal input.)
- Output of contact output signal (Refer to 3.3.7 Wiring of contact output signal.)

Use the signal cable described below for wiring of each function.

■ Signal cable

Use the cable and terminals as follows below for wiring of each function.

Table 3-5 Signal cable

Terminal specification		Cable specification
Terminal block screw diameter	Recommended crimp terminal	
M3	1.25Y－3	0.75 mm^2 (AWG18) Shielded cable

3.3.5 Wiring of run/stop signal input·Remote signal input

Run/Stop signal input and remote signal input enable the product to operate/stop or switched DIO REMOTE and DIO LOCAL remotely by applying a contact signal input. This chapter illustrates examples of wiring.

Select DIO mode as the communication mode to activate the run/stop signal input and remote signal input after wiring referring to Operation Manual Communication Function.

[Tips]

This product has two input signals. These can be customized depending on the customer's application.

Table 3-6 Power supply, contact specifications

Name	Terminal NO.	Specification	
Power supply output	5, 6, 7 (24VDC) 13,14, 15 (24V COM)	DC 24V ±10% 500mA MAX*1	
Contact input signal 1	3 (Contact input signal 1) 11 (Common of contact input signal 1)	-Run/stop signal input -External switch signal input*2	Switch the input on the operation display panel.
Contact input signal 2	4 (Contact input signal 2) 12 (Common of contact input signal 2)	-Run/stop signal input -Remote signal input -External switch signal input*2	Refer to the Operation manual communication function for details.

*1: To use the power of the device, the total load current must be 500mA or less.
If the load is 500mA or more, the internal fuse will be cut to protect the product and the alarm [AL21 DC line fuse cut] will be generated. Refer to Chapter 6 for handling of alarms.
*2: Refer to 3.3.6 Wiring of external switch signal input.

1. Prepare the switch (power supply voltage: 24VDC, contact capacity: 35mA or more, minimum load current: 5mA), and a signal cable (See "Table 3-5 Signal cable").

2. Connect the signal cable and switch to the terminal as follows. (This wiring is an example.)

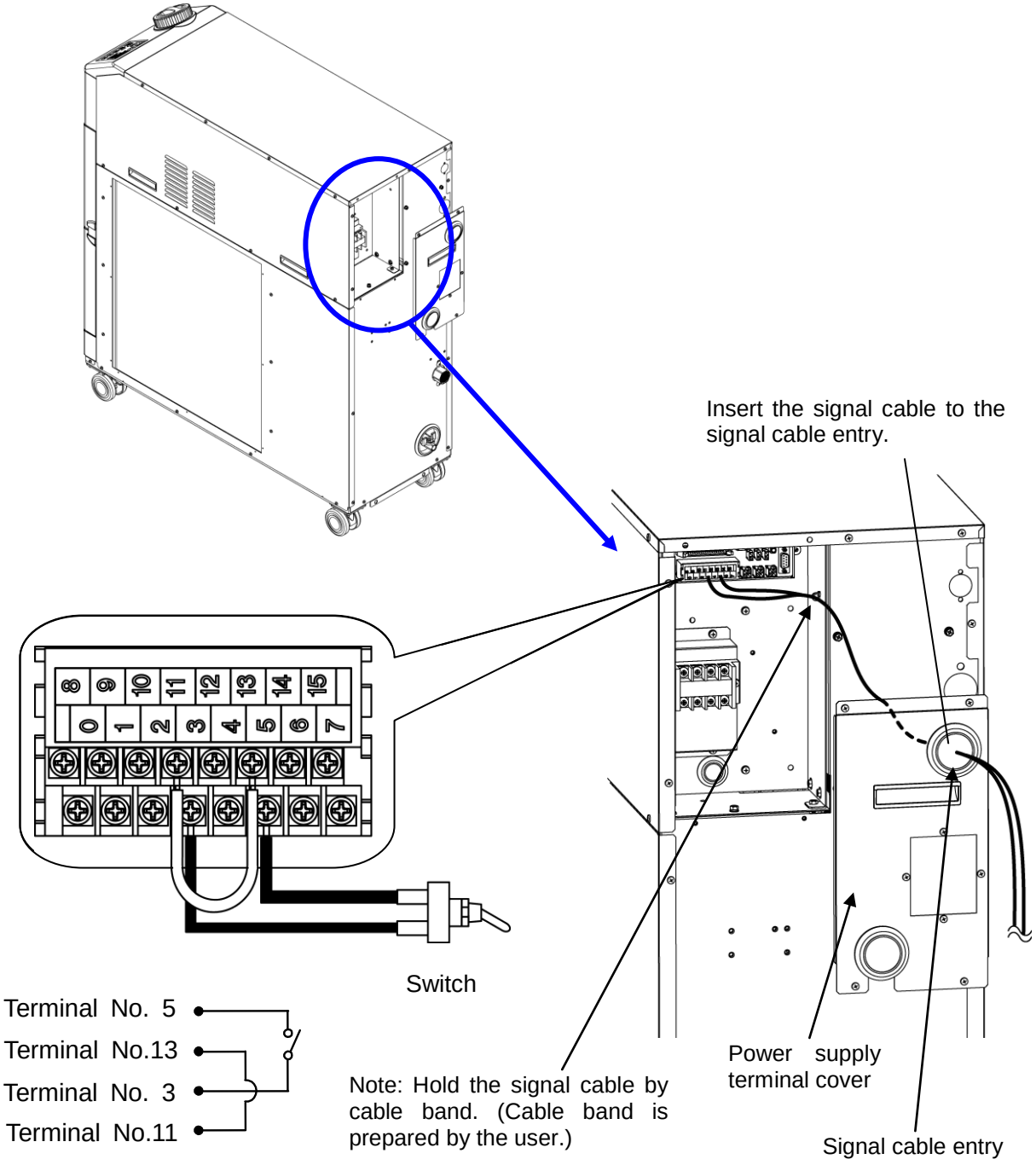

Fig. 3-13 Wiring of Run/stop signal input･Remote signal input (Example)

3.3.6 Wiring of external switch signal input

This product can be monitored by sampling the signal of the external switch prepared by the customer.

Table 3-7 Power supply, contact specifications

Name	Terminal NO.	Specification
Power supply output	5, 6, 7 (24VDC)	24VDC ±10% 500mA MAX*1
	13,14, 15 (24V COM)	
Contact input signal 1	3 (Contact input signal 1)	NPN open collector output PNP open collector output (Refer to the operation manual communication function.)
	11 (Common of contact output signal 1)	
Contact input signal 2	4 (Contact input signal 2)	
	12 (Common of contact output signal 2)	

*1:To use the power of the device, the total load current must be 500mA or less.
If the load is 500mA or more, the internal fuse will be cut to protect the product and the alarm [AL21 DC line fuse cut] will be generated. Refer to Chapter 6 for handling of alarms.

One external switch can be connected to contact input signal 1 and one to contact input signal 2. (Two in total) The external switch cannot be connected to the contact input signal 1 depending on the communication mode.Table3-9 External switches used in the examples .

Table 3-8 Sets external switch

Communication mode ∗1		Contact input signal 1	Contact input signal 2
Local mode		✓	✓
SERIAL mode	MODBUS	✓	✓
	Simple communication protocol 1	✓	✓
	Simple communication protocol 2	x	✓
DIO mode		x	✓

∗1:Refer to the Operation Manual Communications Function for more details of each mode.
Local mode: Mode allowing the product to be operated by the operation panel. (Default setting)
SERIAL mode: Mode allowing the product to be operated by serial communication.
DIO mode: Mode allowing the product to be operated by the contact input/output communication.

■ Example of connection

As an example of connection of an external switch, the connecting method is shown below using the SMC flow switch (NPN, PNP).
This chapter illustrates examples of wiring

⚠ WARNING

Be sure to turn OFF the breaker of the facility power supply (the user's machine power supply) before wiring.

Table3-9 External switches used in the examples

Description	Manufacturer	Part NO.	Output type	Current consumption
Flow switch	SMC	PF3W711□-□□-A□(-M)	NPN open collector output	50mA or less
		PF3W711□-□□-B□(-M)	PNP open collector output	50mA or less

1. Prepare the flow switch described in the table purchasing separately.

2. Depending on the external switch output type, connect the wire the switch to the terminals for contact input signal as shown below. (This is an example of wiring. Refer to the Operation Manual Communication Function for further details.)

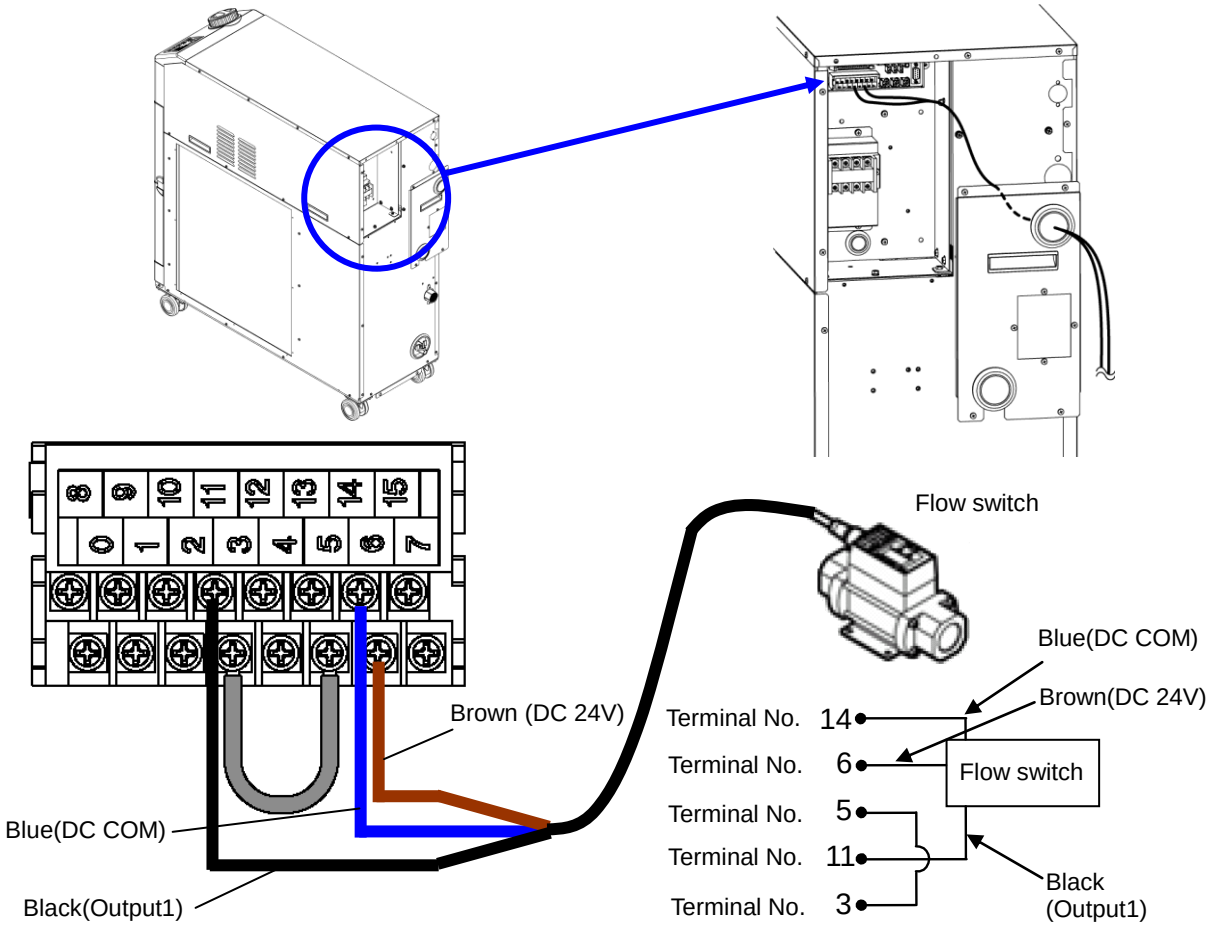

Fig. 3-14 Wiring of the external switch (NPN open collector output) (example)

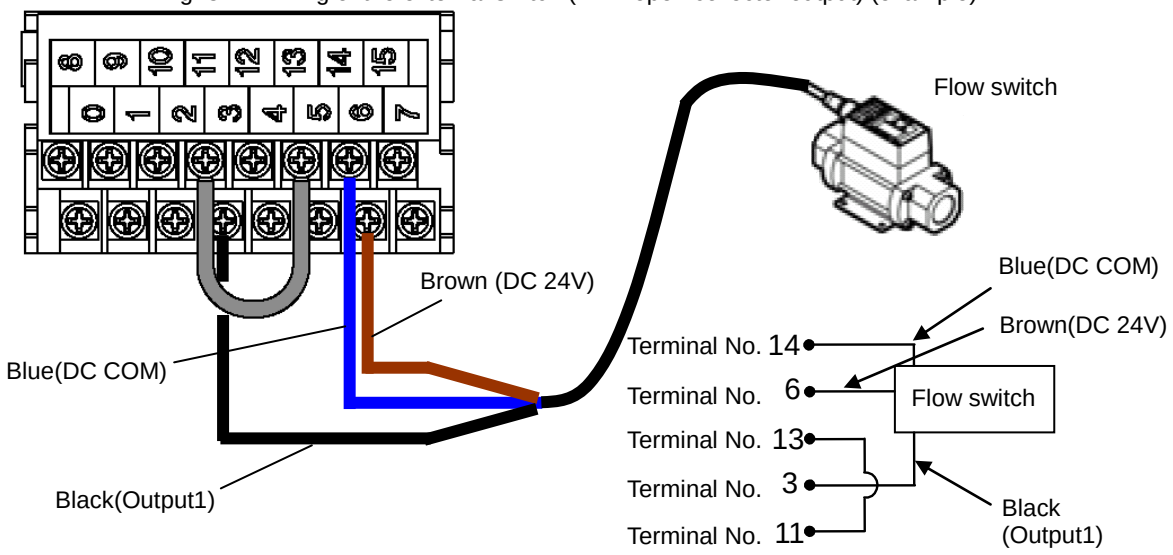

Fig. 3-15 Wiring of the external switch (PNP open collector output) (example)

■ Setting items

Table 3-10 shows the setting items of the external switch. For details, refer to 5.20 Communication function.

Table 3-10 Setting list of the external switch

Display	Item		Initial value (Default setting)	Example*	Reference page	Category
C o.0 1	Communication mode		LOC	LOC	5.20	Communication setting menu
C o.1 5	Contact input/output communication	Contact input signal 1	RUN	SW_A		
C o.1 6		Contact input signal 1 type	ALT	ALT		
C o.1 7		Contact input signal 1 delay timer (time delay) of reading	0	0		
C o.1 8		Contact input signal 1 OFF detection timer	0	2		
C o.1 9		Contact input signal 2	OFF	OFF		
C o.2 0		Contact input signal 2 type	ALT	-		
C o.2 1		Contact input signal 2 delay timer (time delay) of reading	0	-		
C o.2 2		Contact input signal 2 OFF detection timer	0	-		

* Example: Connect flow switch A to contact input signal 1 in local mode.

3.3.7 Wiring of contact output signal

Contact output signals are the signals that output the status of this product.
Contact specification of each signal output is shown below

⚠ WARNING

Be sure to turn OFF the breaker of the facility power supply (the user's machine power supply) before wiring.

The specifications of the contact for each signal output are shown below.

Table 3-11 Signal output contact spec. at the time of shipment

Contact output	Signal explanation (Default setting)	Operation		
Contact output signal 1 (Terminal no.0,8)	Operation status signal output	A	During operation:	Contact closed
			During operation stop:	Contact open
			With power supply cutoff:	Contact open
Contact output signal 2 (Terminal no.1,9)	Remote status signal output	A	During remote operation:	Contact closed
			During non-remote operation:	Contact open
			With power supply cutoff:	Contact open
Contact output signal 3 (Terminal no.2,10)	Alarm status signal output	B	While alarm being generated:	Contact open
			While alarm not being generated:	Contact closed
			With power supply shut off:	Contact open

[Tips]

This product has three output signals which can be customized depending on the customer's application

Signals below can be output. Refer to the Communications Operation Manual for more details.

- ・Ready completion (TEMP READY) signal output
- ・Operation stop alarm signal output
- ・Operation continuation alarm signal output
- ・Selected alarm status signal output
- ・Operation start timer setting status signal output
- ・Operation stop timer setting status signal output
- ・Recovery from power failure setting status signal output
- ・Anti-freezing setting status signal output
- ・Contact input signal detecting output
- ・Warming up function setting status output
- ・Anti-snow coverage function setting status output

3.3.8 RS-485 communication wiring

Serial communication RS-485, operation start/stop, setting and reading of circulating fluid temperature, and reading of alarm condition can be done by remote control.

Refer to the Operation Manual Communication Function for more details.

■ Wiring of interface communication cable

⚠ WARNING

Be sure to turn OFF the breaker of the facility power supply (the user's machine power supply) before wiring.

● Connecting to PC

RS-485 cannot be directly connected to a normal PC. Use a RS-232C/RS485 converter which is available on the market.

Be sure to follow the wiring procedure shown below for connecting multiple thermo-chillers.

● Configuration of connection
One thermo-chiller for one host computer, or multiple thermo-chillers for one host computer. (31 thermo-chillers can be connected at maximum.)

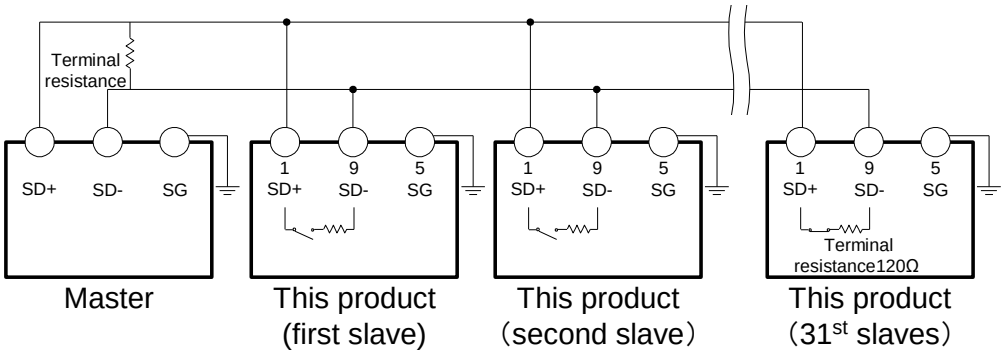

Fig. 3-16 Connection of RS-485

[Tips]

Both ends of the communication connection (the end nodes) need to be connected to the host computer.

With or without the terminating resistor (120Ω) of this product can be set by the operation display panel. Refer to “5.20 Communication function”.

3.3.9 RS-232C communication wiring

Serial communication RS-232C, operation start/stop, setting and reading of circulating fluid temperature, and reading of alarm condition can be performed by remote control.

Refer to the Communications Operation Manual for more details.

■ Wiring of communication cable

⚠ WARNING

Be sure to turn OFF the breaker of the facility power supply (the user's machine power supply) before wiring.

Be sure to wire as shown in the figure below.

- Configuration
  One thermo-chiller for one master.

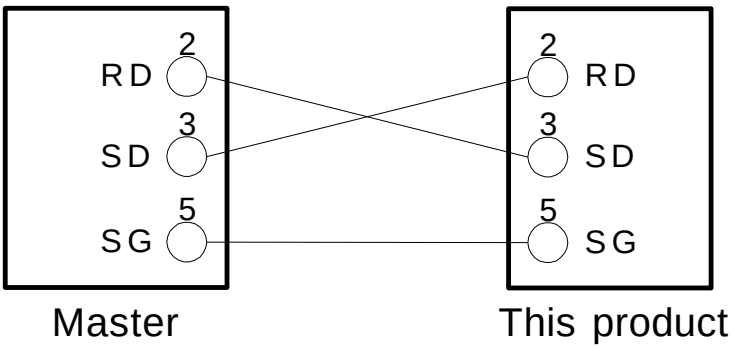

Fig. 3-17 Connection of RS-232C

3.4 Piping

⚠ CAUTION

- **Connect piping firmly. Incorrect piping might cause leakage of supplied or drained fluid and wet surrounding area and facility.**
- **Use caution not to allow dust and foreign matter to enter the water circuit, etc. during connection of piping.**
- **Securely connect the piping at the piping port with specific wrench when tightening.**
- **Incorrect piping can burst in service.**
- **Use non-corrosive material for fluid contact parts of circulating fluid and/or facility water. Also, the use of corrosive materials such as aluminum or iron for fluid contact parts, such as piping, may not only lead to clogging or leakage in the circulating fluid and facility water circuits but also refrigerant leakage and other unexpected problems. Provide protection against corrosion when you use the product.**
- **Do not generate a rapid change of pressure by water hammer, etc. Internal parts of the product and/or the piping may be damaged.**
- **Facility water temperature of the facility water outlet port might rise up to approx.60deg.C.**

■ Piping port size

Table 3-12 Piping port size

Name	Port size*1	Recommended tightening torque	Recommended piping specification
Circulating fluid supply	Rc1	36 to 38N·m	1.0MPa and more
Circulating fluid return	Rc1	36 to 38N·m	1.0MPa and more
Drain port	Rc1/4	8 to 12N·m	-
Facility water inlet *1	Rc1/2	28 to 30N·m	1.0MPa and more. (Supply puressure : 0.3 to 0.5MPa)
Facility water outlet *1	Rc1/2	28 to 30N·m	
Automatic water-fill port *2	Rc3/8	22 to 24N·m	1.0MPa more (Automatic water-fill pressure 0.2 to 0.5MPa)
Overflow port *2	Rc3/4	28 to 30N·m	Inside diameter 19mm more of piping

∗1 : Water cooled type only.
*2 : For Option J [Automatic fluid filling]

[Tips]

<For HRS090-AN-∗ and HRS090-WN-∗>

A set of thread adapters that converts the connections from Rc to NPT is enclosed as an accessory. For NPT thread, be sure to use this adapter.

<For HRS090-AF-∗ and HRS090-WF-∗>

A set of thread adapters that converts the connections from Rc to G is enclosed as an accessory. For G thread, be sure to use this adapter.

■ How to connect piping

Tighten the piping to each connection as follows below.

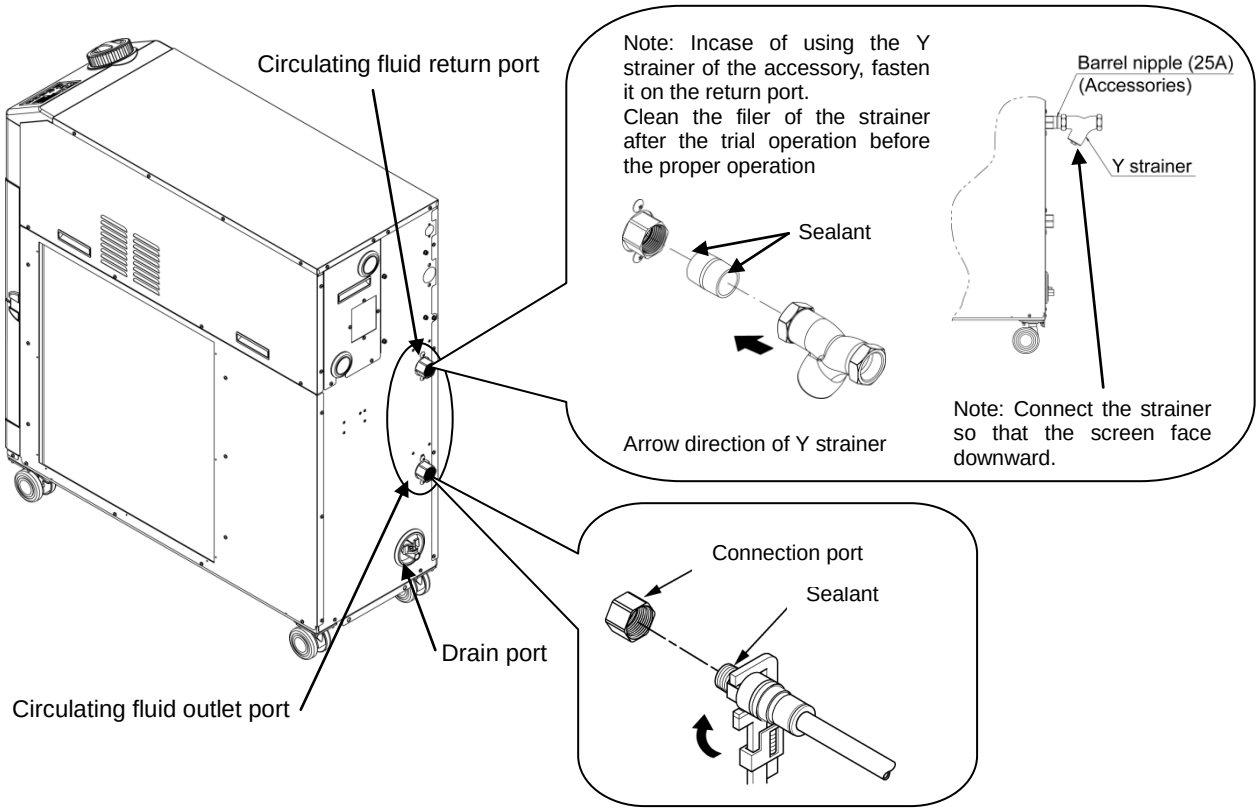

Fig. 3-18 Tightening of piping

■ How to connect to the drain port

When piping the drain port, hold the ball valve of the drain port with a wrench not to rotate it.

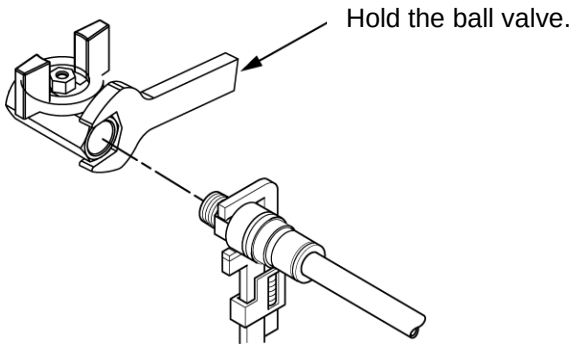

Fig. 3-19 Connection to the drain

⚠ CAUTION

Without holding the ball valve of the drain port with a wrench, the ball valve may rotate and it may cause a fluid leakage and/or malfunction of the product. Be sure to hold the ball valve of the drain port.

■ Recommended piping circuit

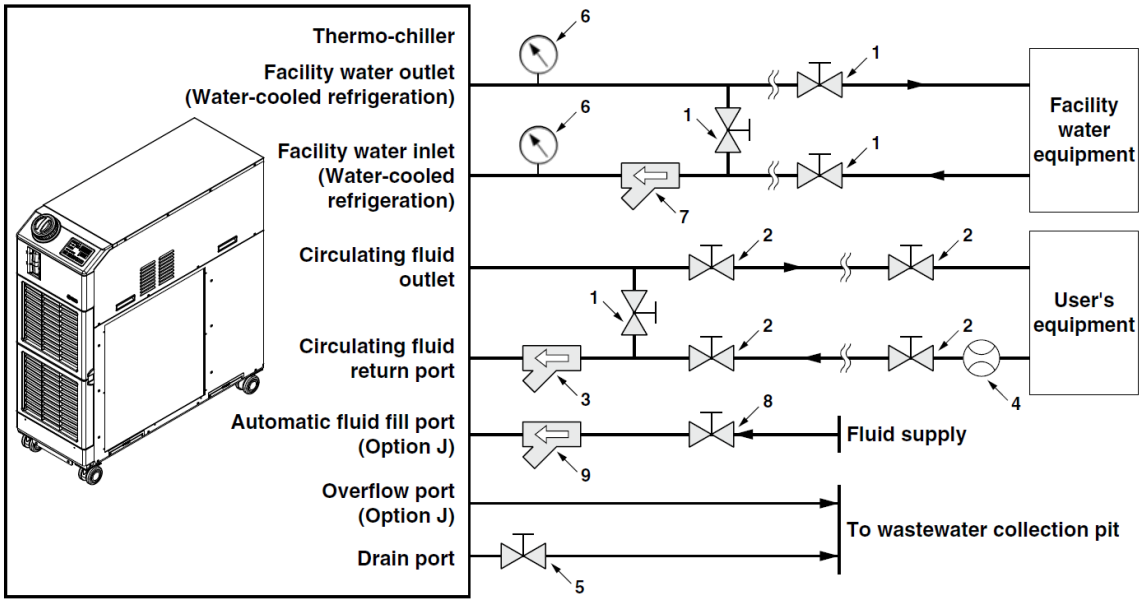

Fig. 3-20 Recommended piping circuit

No.	Description	Size	Recommended part no.	Note
1	Valve	Rc1/2	-	-
2	Valve	Rc1	-	-
3	Y-strainer	Rc1 #40	Accessory	Install either the strainer or filter. If foreign objects with a size of 20 μm or more are likely to enter, install the particle filter.
	Filter	Rc1 20μm	HRS-PF005 Note)	
4	Flow meter	-	-	Prepare a flow meter with an appropriate flow range.
5	Valve (Part of thermo-chiller)	Rc1/4	-	-
6	Pressure gauge	0 to 1.0MPa	-	-
7	Y-strainer	Rc1/2 #40	-	Install either the strainer or filter. If foreign objects with a size of 20 μm or more are likely to enter, install the particle filter.
	Filter	Rc1/2 20μm	-	
8	Valve	Rc3/8	-	-
9	Y-strainer	Rc3/8 #40	-	Install either the strainer or filter. If foreign objects with a size of 20 μm or more are likely to enter, install the particle filter.
	Filter	Rc3/8 20μm	FQ1011N-10-T020-B-X61 Note)	

Note) The filter shown above cannot be directly connected to the thermo-chiller. Install it in the user's piping system.

3.5 Circulating Fluid Supply

Turn the tank lid anticlockwise to open. Supply the circulating fluid up to the “H” mark on the fluid level indicator. Use tap water which satisfies the water quality standard shown in Table 8-1, or a 15% aqueous solution of ethylene glycol.

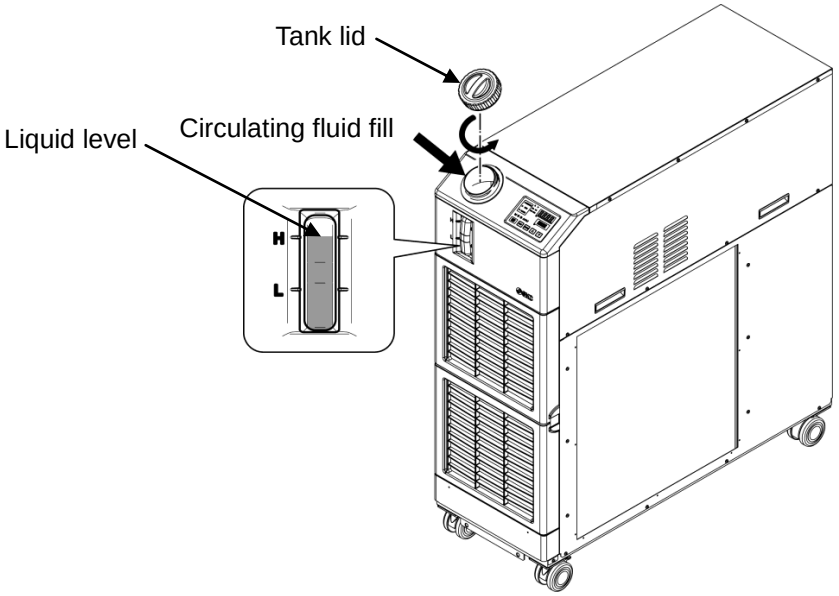

Fig. 3-21 Circulating fluid fill

【Tips】

Supply the circulating fluid to the tank directly with option J [automatic fluid filling] when the tank is empty. Supply the circulating fluid to the empty tank by only automatic fluid filling, it causes the alarm “AL01; Low level in tank".

CAUTION

- **If tap water is used, refer to 8.1Quality Control of Circulating Fluid and Facility Water.**
- **If 15% ethylene glycol aqueous solution is used, dilute pure ethylene glycol with water. Additives such as antiseptics cannot be used.**
- **If deionized water is used, the conductivity should be 1μS/cm and higher (Electrical resistivity: 1MΩ･cm and lower).**
- **Check the drain port is closed by the valve to prevent the supplied circulating fluid from draining out.**
- **Supply the circulating fluid up to the “H” mark on the tank. Operation will stop when the fulid level falls lower than “L”.**

CAUTION

When the circulating fluid temperature is lower than 10 deg. C, use 15% aqueous solution of ethylene glycol. Otherwise it may cause icing of the fluid.

■ 15% aqueous solution of ethylene glycol

When a 15% aqueous solution of ethylene glycol is used, prepare the ethylene glycol aqueous solution separately.
To control the density of the ethylene glycol aqueous solution, a densitometer is available (sold separately) from SMC.

Item	No	Remarks
Ethylene glycol aqueous solution 60%	HRZ-BR001	Please dilute to 15% with tap water and use it.
Densitometer	HRZ-BR002	—

CAUTION

- **When a 15% aqueous solution of ethylene glycol is used, check the density periodically because the density will be lower due to the automatic fluid-fill function.**

3.6 Option J Piping of【Automatic fluid filling】

Automatic fluid filling port and over flow port need to be connected when optional [automatic fluid filling] is selected.

■ Piping to automatic fluid filling port

Connect the piping to supply the circulating fluid. Automatic fluid filling is performed by using the solenoid valve which is built in the thermo-chiller.

■ Piping to the overflow port

This is necessary when automatic fluid filling function is used. Discharge excess circulating fluid when the fluid level in the tank rises due to the failure of the solenoid valve etc.

Piping name	Port size	Piping specifications
Automatic water-fill inlet	Rc3/8	Supply pressure：0.2 to 0.5MPa Supply temperature：5 to 40℃
Overflow outlet	Rc3/4	Piping should be within 19mm of I.D. and 5m of length. Riser piping (trapping area) should be avoided.

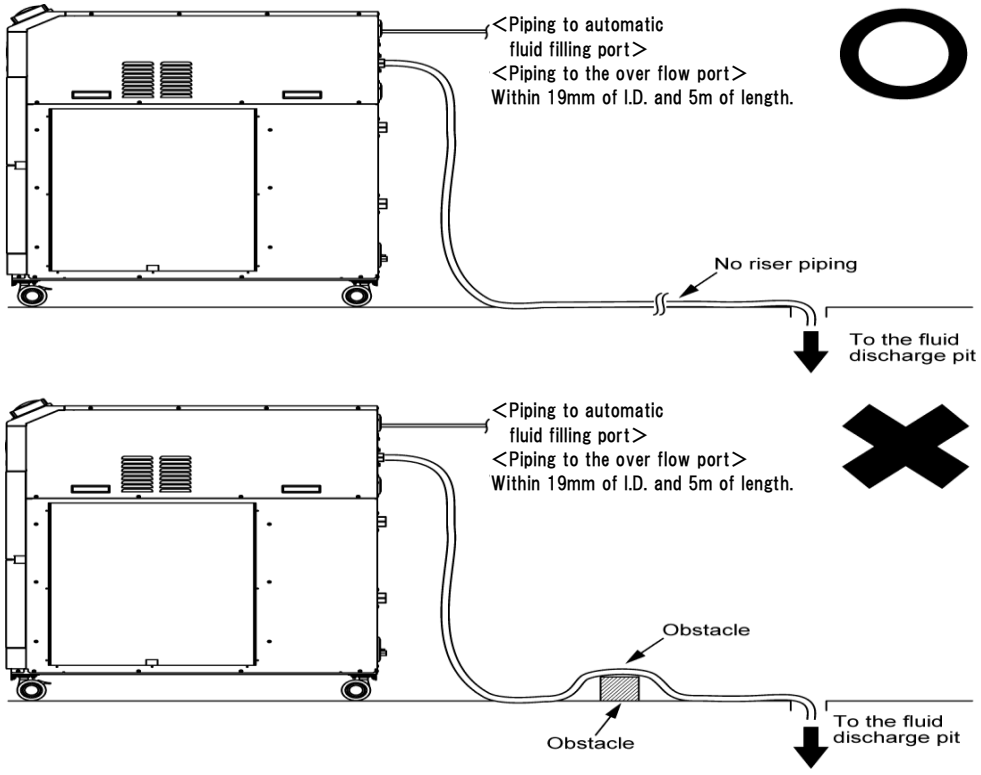

Fig. 3-22 Piping to automatic fluid filling port and overflow port

■ Supplying fluid from the automatic fluid filling port

Fluid filling starts if the power supply is turned ON when the fluid level of the circulating fluid is “L” of the level indicator or lower (4.2 Preparation for Start). Fluid supply stops when the fluid level reaches the proper level. If the fluid level does not reach the proper level in a certain time after starting supplying fluid, it causes the alarm “AL01; Low level in tank". Fluid supply continues while the alarm is generated. Fluid supply stops after the fluid level reaching proper level. Alarm continues after fluid supply is completed. Release the alarm referring Chapter 7.

Chapter 4 Starting the Product

CAUTION

Only people who have sufficient knowledge and experience about the product and its accessories are allowed to start and stop the product.

4.1 Before Starting

- Check the following points before starting the product.

■ Installation state

- Check the product is installed horizontally.
- Check that there are no heavy objects on the product, and the external piping is not applying excessive force to the product.

■ Connection of cables

- Check that the power, ground and I/O signal cables (to be supplied by user) are correctly connected.

■ Circulating fluid piping

- Check that the circulating fluid piping is correctly connected to the inlet and outlet.

■ Fluid level gauge

- Confirm that the fluid level is between 'HIGH' and 'LOW' levels of the fluid level gauge.

■ Facility water piping (For water cooled type)

- Check that the piping is correctly connected to the facility water inlet and outlet ports.
- Confirm that the facility water source is in operation.
- Confirm that the facility water circuit is not closed with a valve, etc.

CAUTION

- **Facility water quality must satisfy the quality standard shown in "Table 8-1 Quality Control of Circulating Fluid and Facility Water" and the conditions shown in "9.1 Specifications"**

[Tips]

A water control valve is mounted inside the water cooled type thermo-chiller. For the water cooled type, facility water may not run without operating the product.

4.2 Preparation for Start

4.2.1 Power supply

Turn ON the breaker of the user's power supply.

When the product is switched ON, the operation panel display operates as shown below:

- The initial screen (HELLO screen) is displayed for 8 seconds on the operation display panel. Then, the display moves to the main display which shows the circulating fluid outlet temperature.
- The set circulating fluid temperature is displayed as SV on the digital display.
- The present circulating fluid temperature is displayed as PV on the digital display.

4.2.2 Option B [Earth leakage breaker], HRS090-**-40-*

⚠ WARNING

Be sure to lock out and tag out the breaker of the facility power supply (customer power supply facility) before wiring.

1. Turn on the breaker switch on the back of the product.

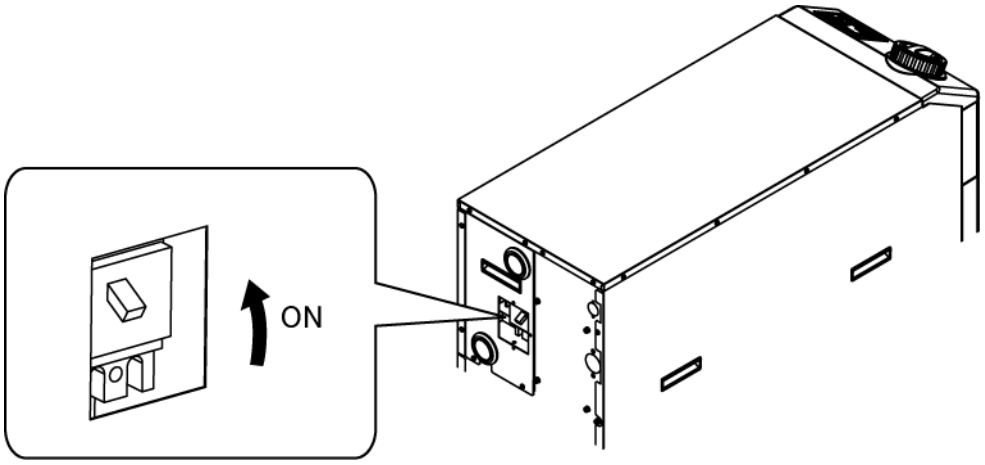

Fig. 4-1 Power supply

4.2.3 Setting of circulating fluid temperature

Press the [▼] or [▲] button on the operation panel to change the SV to the required value.

When setting the circulating fluid temperature by communication, refer to Operation Manual Communication Function.

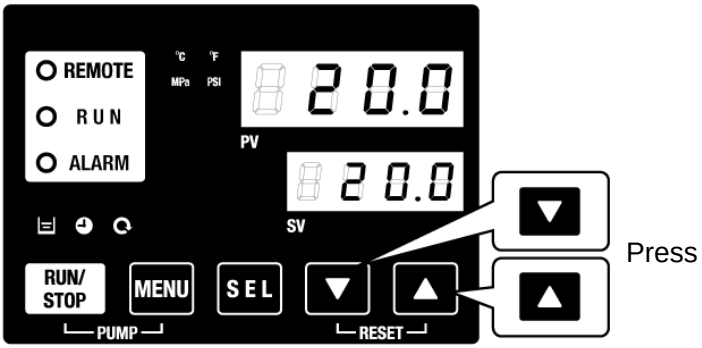

Fig. 4-2 Setting of circulating fluid temperature

4.3 Preparation of circulating fluid

Circulating fluid is supplied only inside of the product at the time of installation of the thermo-chiller.

When the product starts operation in this condition, circulating fluid level will be reduced as the fluid in the level gauge goes down due to the fluid supply to the user's equipment from the thermo-chiller, and the additional fluid needs to be supplied to the thermo-chiller.

Follow the instructions below to supply additional fluid:

1. Press the [PUMP] button on the operation panel (press the [RUN/STOP] button and [MENU] button simultaneously).

The pump operates independently while the [PUMP] button is being pressed. The [RUN] light (green) blinks while the pump is operating independently and the circulating fluid in the tank is supplied to the user's equipment and piping. This finds out leakage from the piping as well as discharges air from the piping. If the fluid level in the tank reaches the lower limit, a buzzer will be generated, and the alarm number "AL01 (low level in tank)" is displayed as PV on the digital display. The [ALARM] light (red) blinks, the [⊟] light turns ON, and independent operation of the pump stops. For alarm reset, refer to step 2.

CAUTION

When any external fluid leakage is found with the piping during this operation, stop the individual operation of the pump and fix the leaking part.

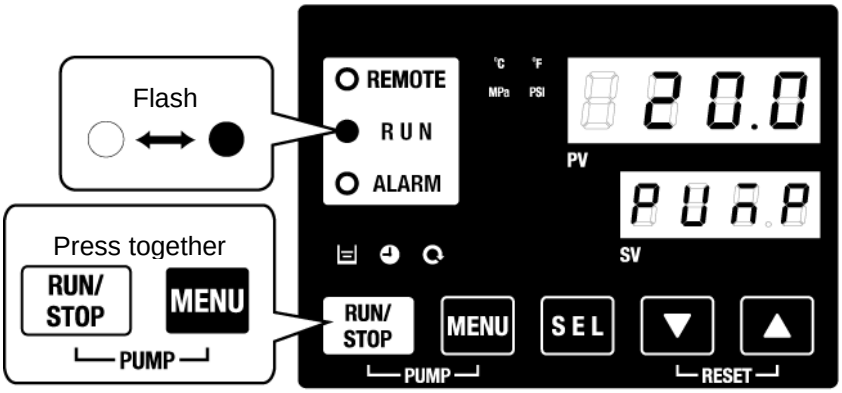

Fig. 4-3 Manual operation of the pump

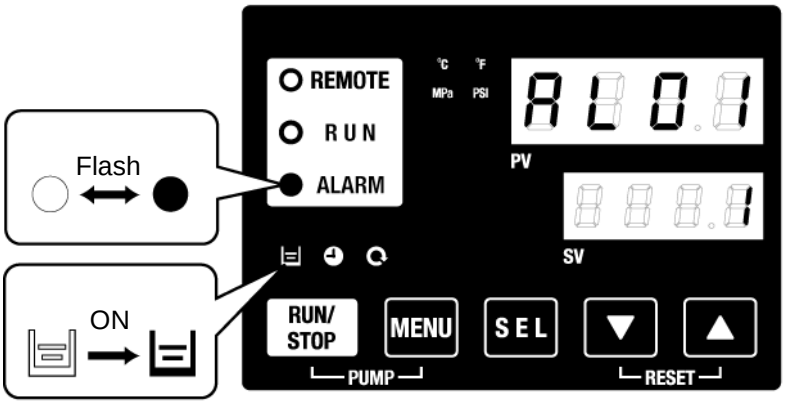

Fig. 4-4 Low tank level alarm

2. Press the [RESET] button (press the [▼] and [▲] buttons simultaneously) to stop the alarm buzzer.

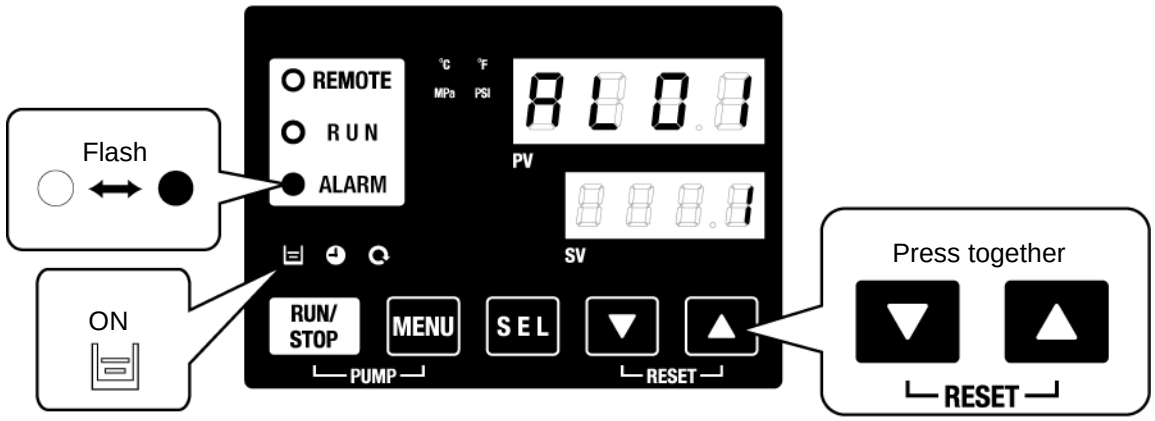

Fig. 4-5 Alarm receipt

CAUTION

Reset alarms on the ”Alarm menu” screen. Alarm reset is not accepted from any screen except the "Alarm menu" screen. Refer to 5.2.1 Key operations.

3. Open the tank lid and supply the circulating fluid up to the “H” mark on the tank.

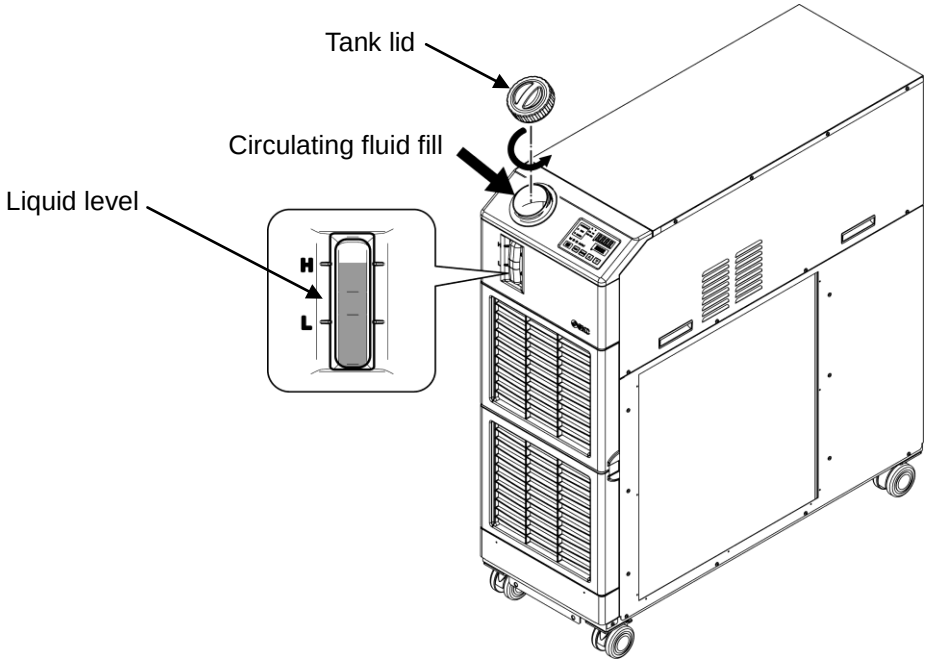

Fig. 4-6 Filling of Circulating Fluid

CAUTION

Check the drain port is plugged or closed by the valve to prevent the supplied circulating fluid from draining out.
When the fulid level falls lower than "L", the alarm will be generated.

4. Press the [RESET] button (press the [▼] and [▲] buttons simultaneously) to reset the alarm.

Pressing these buttons at the same time resets the alarm (low level tank) and turns OFF the [ALARM] LED (red) and the [ ] LED. The display returns to the initial main menu screen, “Circulating fluid temp./Circulating fluid set temp.”. Press the [PUMP] button (press the [RUN/STOP] button and the [MENU] button simultaneously) again to operate the pump individually.

CAUTION

Reset alarms on the "Alarm menu" screen.
Alarm reset is not accepted from any screen except the "Alarm menu" screen. Refer to 5.2.1 Key operations.

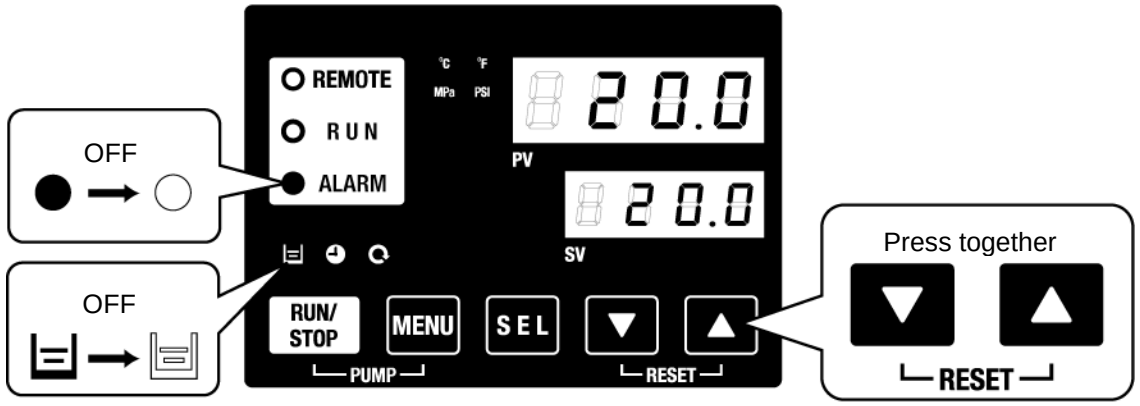

Fig. 4-7 Alarm release

5. Repeat steps 1 to 4 to supply the circulating fluid to the user’s equipment and piping. Keep the fluid level in the tank between the "HIGH" and "LOW" levels of the fluid level gauge of this product.

4.4 Operation Start and Stop

4.4.1 Starting the product

CAUTION

Allow at least five minutes before restarting the product.

Before starting, check the items specified in “4.1 Before Starting”

If any alarm light remains ON, refer to Chapter 7 Alarm Notification and Troubleshooting”

1. Press the [RUN/STOP] key on the operation panel.

he [RUN] LED (green) turns ON and the product starts running. The circulating fluid discharge temperature (PV) is controlled to the set temperature (SV).

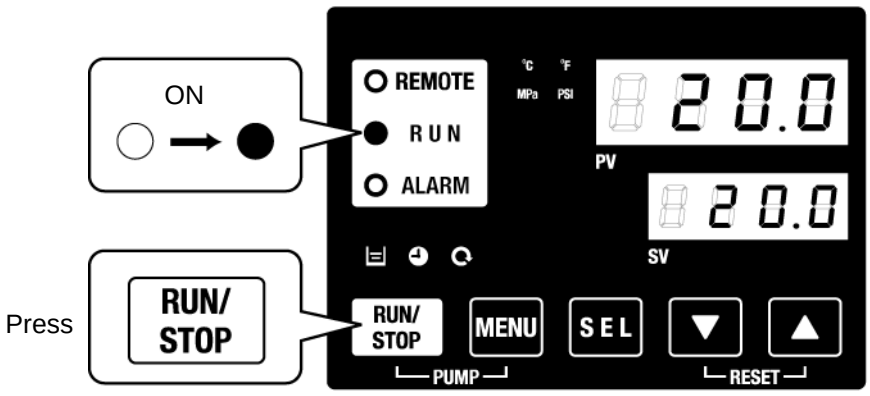

Fig. 4-8 Starting the product

CAUTION

When any alarm is generated, refer to “Chapter 7 Alarm Notification and Troubleshooting”.

2. Be sure to confirm that the circulating fluid level satisfies the minimum required flow rate specified for each model with the check monitor menu.

4.4.2 Stopping the product

1. Press the [RUN/STOP] button on the operation panel.

The [RUN] light on the operation panel blinks green at 1 second intervals, and continues operation to prepare to stop. After approximately 20 seconds, the [RUN] light turns OFF and the operation stops completely.

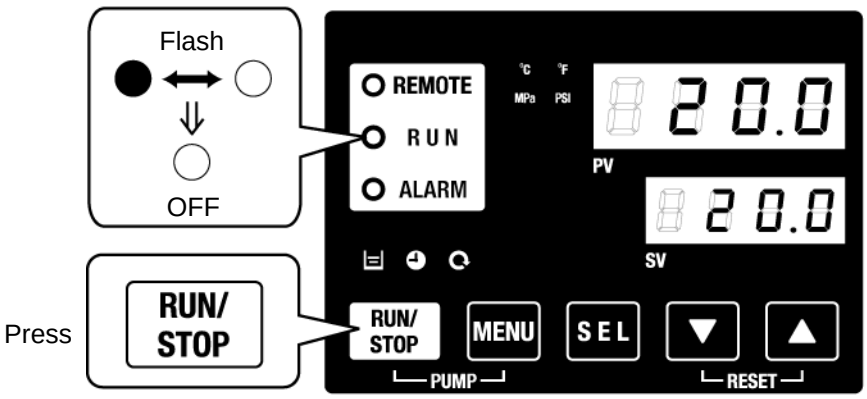

Fig. 4-9 Stopping the product

2. Turn off the earth leakage breaker of the user's power supply.

CAUTION

Except in case of emergency, do not turn off the breaker until the product has stopped completely. Otherwise it may cause a failure.

4.5 Check items during startup

Check the following items after starting the product.

⚠ WARNING

When any abnormality is found, press the [STOP] button to stop the product operation, and then turn OFF the breaker of the user's power supply.

- Confirm that there is leakage from the piping.
- Confirm that no circulating fluid is discharged from the drain port.
- Confirm that the circulating fluid pressure is within the specification range.
- Confirm that the fluid level shown by the fluid level gauge is within the specification range.

4.6 Adjustment of Circulating Fluid flow rate

When the circulating fluid flow rate is smaller than the minimum required, the product may fail to maintain the performance, making it impossible for the compressor to operate.
Refer to Fig. 3-20 Recommended piping circuit, and adjust the flow rate with the manual valve to the required pressure or flow rate while monitoring the pressure and/or flow rate.

[Tips]

Regarding the minimum operation flow rate, refer to "9.1 Specifications".

Chapter 5 Display and setting of various functions

⚠ WARNING

Read and understand this manual carefully before changing the settings.

5.1 List of function

The product can have the displays and settings shown in Table 5-1.

Table 5-1 List of function

NO	Function	Outline	Reference page
1	Main display	Displays the current temperature of the circulating fluid, discharge pressure of the circulating fluid change the circulating fluid temperature.	5.3
2	Alarm display menu	Indicates alarm number when an alarm occurs.	5.4
3	Inspection monitor menu	Product temperature, pressure and accumulated operating time can be checked as daily inspection. Use these for daily inspection.	5.5
4	Key-lock	Keys can be locked so that set values cannot be changed by operator error.	5.6
5	Timer for operation start /stop	Timer is used to set the operation start/stop.	5.7
6	Signal for the completion of preparation	A signal is output when the circulating fluid temperature reaches the set temperature, when using contact input/output and serial communication.	5.8
7	Offset function	Use this function when there is a temperature offset between the discharge temperature of the thermo-chiller and the customer's device.	5.9
8	Reset after power failure	Start operation automatically after the power supply is turned on.	5.10
9	Key click sound setting	Operation panel key sound can be set on/off.	5.12
10	Changing temp. unit	Temperature unit can be changed. Centigrade(^{o}C) ⇔ Fahrenheit(^{o}F)	5.13
11	Changing pressure unit	Pressure unit can be changed. MPa⇔PSI	5.14
12	Data reset	Functions can be reset to the default settings (settings when shipped from the factory).	5.15
13	Accumulation time reset	Reset function when the pump, the fan or the compressor is replaced. Reset the accumulated time here.	5.16
14	Anti-freezing function	Circulating fluid is protected from freezing during winter or night. Set beforehand if there is a risk of freezing.	5.11
15	Warming up function	When circulating fluid temperature rising time at starting needs shortening during winter or night, set beforehand.	5.17
16	Setting of alarm buzzer	Alarm sound can be set to on/off.	5.18
17	Alarm customizing	Operation during alarm condition and threshold values can be changed depending on the alarm type.	5.19
18	Communication	This function is used for contact input/output or serial communication.	5.20

5.2 Function

5.2.1 Key operations

Fig. “Key operation (1/2)” and “Key operation (2/2)” shows the operation of keys of the thermo-chiller.

By pressing the “SEL” key for 2 seconds, the PV display blinks and function of “SEL” key, display change becomes opposite turn.

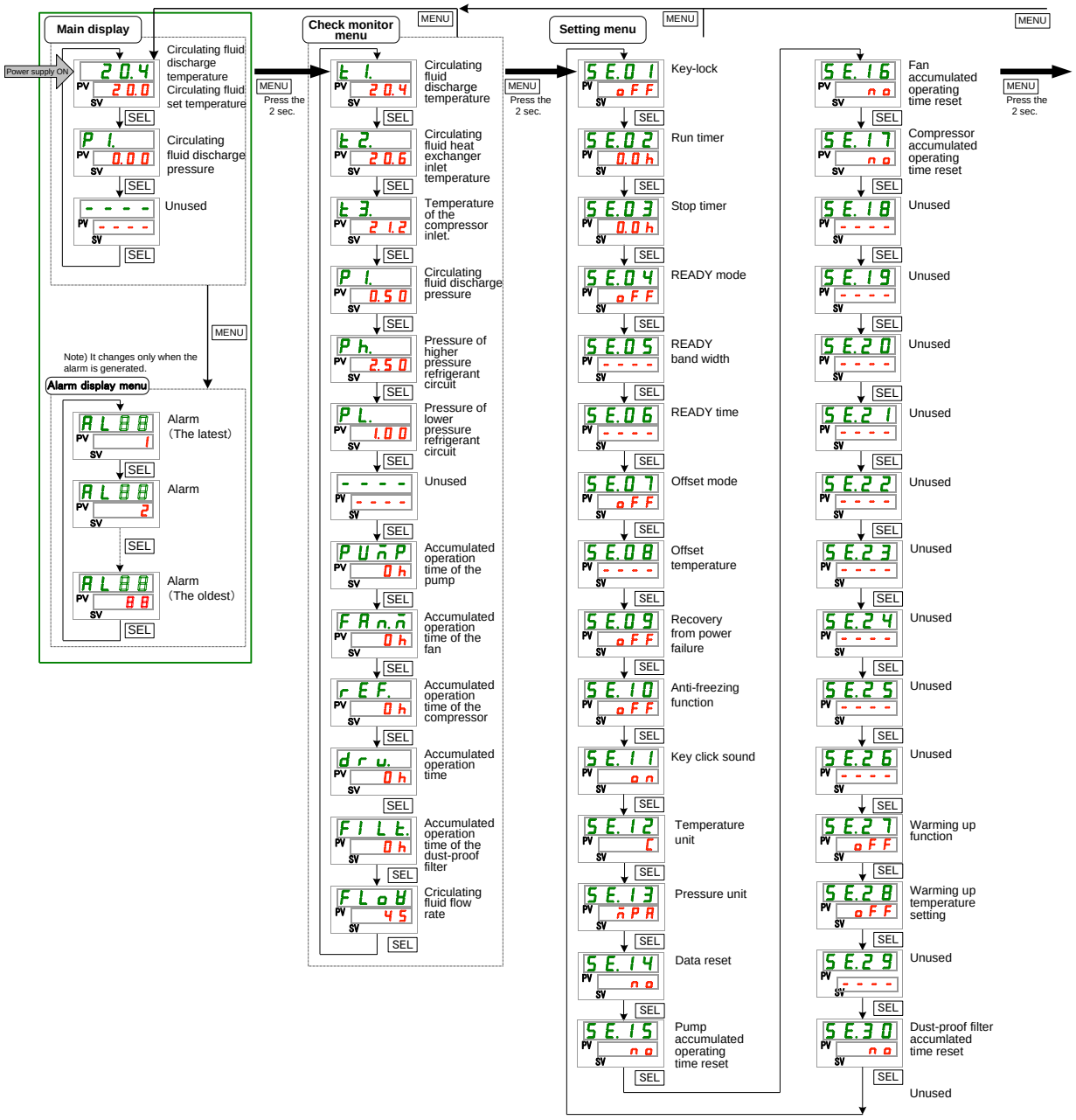

Fig. 5-1 Key operation (1/2)

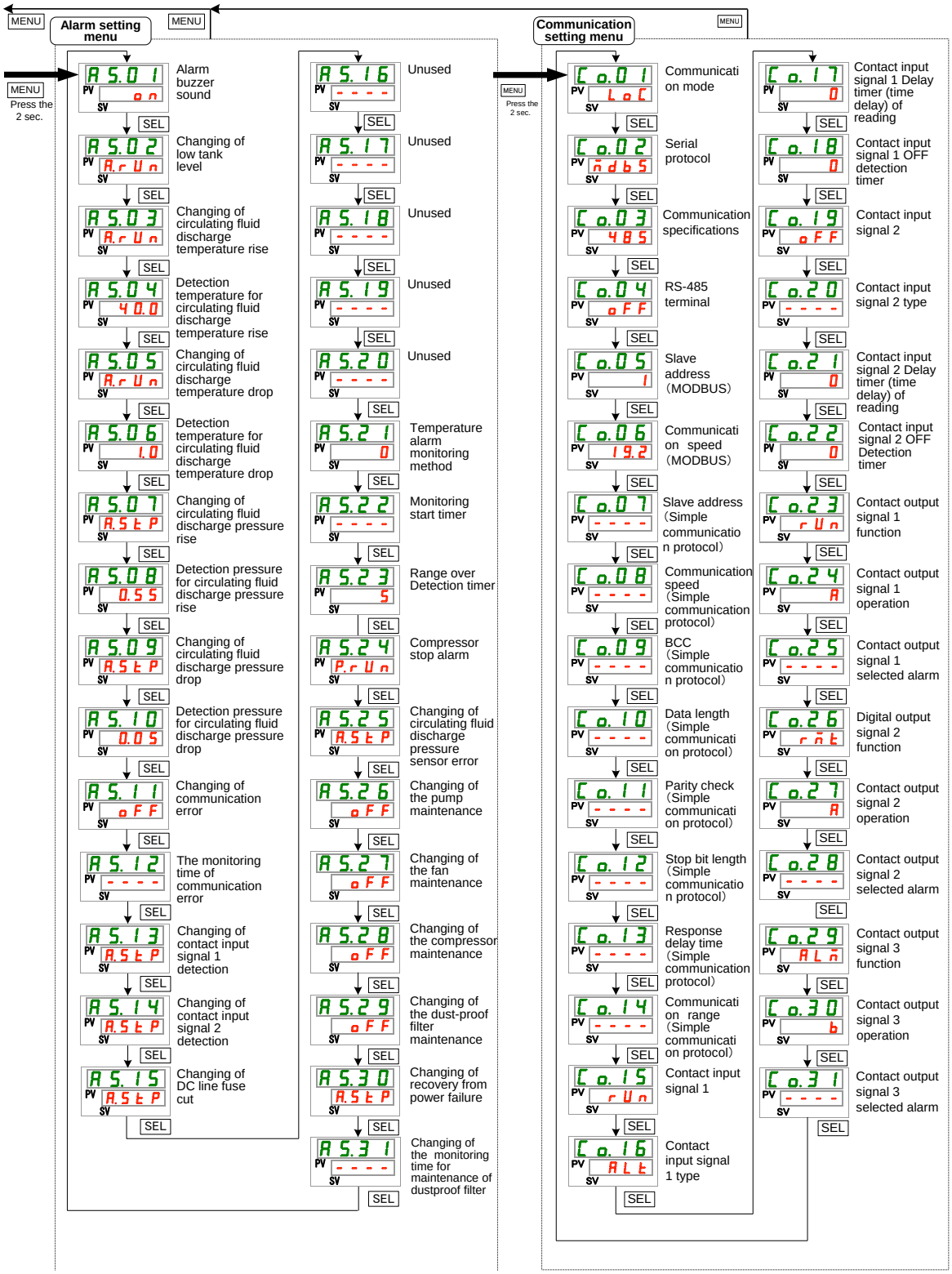

Fig. 5-2 Key operation (2/2)

5.2.2 List of parameters

"Table 5.2-1 List of parameters (1/3)" to "Table 5.2-3 List of parameter (3/3)" show the parameters of the thermo-chiller.

Table 5.2-1 List of parameters (1/3)

Display	Content	Default setting∗1	Reference page	Category
Temperature	Circulating fluid temperature(TEMP PV)		5.3	Main display
	Circulating fluid set temperature(TEMP SV)	20 °C (68°F)		
P 1.	Circulating fluid discharge pressure			
- - - -	Unused			
AL xx	Alarm No.		5.4	Alarm display menu
t 1.	Circulating fluid discharge temperature		5.5	Check monitor menu
t 2.	Circulating fluid inlet heat exchanger temperature			
t 3.	Temperature of the compressor inlet.			
P 1.	Circulating fluid discharge pressure			
P h.	Pressure of higher pressure refrigerant circuit			
P L.	Pressure of lower pressure refrigerant circuit			
- - - -	Unused			
PUmP	Accumulated operation time of the pump			
FAn.m	Accumulated operation time of the fan			
rEF.	Accumulated operation time of the compressor			
dru.	Accumulated operation time			
FILt.	Accumulated operation time of the dust-proof filter			
FLoW	Circulating fluid flow rate			
SE.01	Key-lock	OFF	5.6	Setting menu
SE.02	Run timer	0.0H	5.7	
SE.03	Stop timer	0.0H		
SE.04	READY mode	OFF	5.8	
SE.05	READY band width	---- (0 °C (0 °F)∗2		
SE.06	READY time	---- (10) ∗2		
SE.07	Offset mode	OFF	5.9	
SE.08	Offset temperature	---- (0 °C (0 °F)∗3		
SE.09	Recover from power failure	OFF	5.10	
SE.10	Anti-freezing function	OFF	5.11	
SE.11	Key click sound	ON	5.12	
SE.12	Temperature unit	C	5.13	
SE.13	Pressure unit	MPa	5.14	
SE.14	Data reset	NO	5.15	
SE.15	Pump accumulated operating time reset	NO	5.16	
SE.16	Fan accumulated operating time reset	NO		
SE.17	Compressor accumulated operating time reset	NO		
SE.18	Unused	----		
SE.19	Unused	----		
SE.20	Unused	----		
SE.21	Unused	----		
SE.22	Unused	----		
SE.23	Unused	----		

*1: Initial values are shown in Fahrenheit (□□ °F) when the temperature unit is set to F for SE12.
∗2: Default when SE04 is set ON.
∗3: Default when SE07 is set to MD1, 2 or 3.

Table 5.2-2 List of parameter (2/3)

Display	Content	Default setting∗4	Reference page	Category
SE.27	Warming up function	OFF	5.17	Setting menu
SE.28	Warming up temperature setting	---- (20.0 °C (68.0 °F)∗6		
SE.29	Unused	----		
SE.30	Dust-proof filter accumulated time reset	NO	5.16	
AS.01	Alarm buzzer sound	ON	5.18	Alarm setting menu
AS.02	Changing of low tank level	A.RUN	5.19	
AS.03	Changing of circulating fluid discharge temperature rise	A.RUN		
AS.04	Detection temperature for circulating fluid discharge temperature rise	40.0 °C (104.0 °F) (----)∗7		
AS.05	Changing of circulating fluid discharge temperature drop	A.RUN		
AS.06	Detection temperature for circulating fluid discharge temperature drop	1.0 °C (33.8 °F) (----)∗7		
AS.07	Changing of circulating fluid discharge pressure rise	A.STP		
AS.08	Detection pressure for circulating fluid discharge pressure rise	0.55MPa (80PSI) (----)*6		
AS.09	Changing of circulating fluid discharge pressure drop	A.STP		
AS.10	Detection pressure for circulating fluid discharge pressure drop	0.05MPa (4PSI) (----)*6		
AS.11	Changing of communication error	OFF		
AS.12	The monitoring time of communication error	---- (30)∗6		
AS.13	Changing of Contact input signal 1 detection	A.STP		
AS.14	Changing of Contact input signal 2 detection	A.STP		
AS.15	Changing of DC line fuse cut	A.STP		
AS.16	Unused	----		
AS.17	Unused	----		
AS.18	Unused	----		
AS.19	Unused	----		
AS.20	Unused	----		
AS.21	Temperature alarm monitoring method	0		
AS.22	Monitoring start timer	---- (0)∗7		
AS.23	Range over Detection timer	5		
AS.24	Compressor stop alarm	P.RUN		

∗4: Values are shown in °F when the unit is set to F for SE12, and in PSI when the unit is set to PSI for SE13.
∗5: Default value when SE27 is ON.
∗6: Regarding the detail of the default setting, refer to “5.19Alarm customizing function”.

Table 5.2-3 List of parameter (3/3)

Display	Content			Default setting	Reference page	Category
A5.25	Changing of circulating fluid pressure sensor error			A.STP	5.19	Alarm setting menu
A5.26	Changing of the pump maintenance			A.STP		
A5.27	Changing of the fan maintenance			OFF		
A5.28	Changing of the compressor maintenance			OFF		
A5.29	Changing of the dust-proof filter maintenance			A.RUN		
A5.30	Changing of the recovery from power failure			A.STP		
Co.01	Communication mode			LOC	5.20	Communication setting menu
Co.02	Serial communication	Serial protocol		MDBS		
Co.03		Communication specifications		485		
Co.04		RS-485 terminal		OFF		
Co.05		Mod bus	Slave address	1 (----)∗7		
Co.06			Communication speed	19.2 (----)∗7		
Co.07		Simple communication protocol	Slave address	---- (1)∗7		
Co.08			Communication speed	---- (9.6)∗7		
Co.09			BCC	---- (ON)∗7		
Co.10			Data length	---- (8BIT)∗7		
Co.11			Parity check	---- (NON)∗7		
Co.12			Stop bit length	---- (2BIT)∗7		
Co.13			Response delay time	---- (0)∗8		
Co.14			Communication range	---- (RW)∗7		
Co.15	Contact input/output communication	Contact input signal 1		RUN		
Co.16		Contact input signal 1 type		ALT		
Co.17		Contact input signal 1 delay timer (time delay) of reading		---- (0)∗7		
Co.18		Contact input signal 1 OFF detection timer		---- (0)∗7		
Co.19		Contact input signal 2		OFF		
Co.20		Contact input signal 2 type		ALT		
Co.21		Contact input signal 2 delay timer (time delay) of reading		---- (0)∗7		
Co.22		Contact input signal 2 OFF detection timer		---- (0)∗7		
Co.23		Contact output signal 1 function		RUN		
Co.24		Contact output signal 1 operation		A		
Co.25		Contact output signal 1 selected alarm		---- (AL.01) ∗7		
Co.26		Contact output signal 2 function		RMT		
Co.27		Contact output signal 2 operation		A		
Co.28		Contact output signal 2 selected alarm		---- (AL.01) ∗7		
Co.29		Contact output signal 3 function		ALM		
Co.30		Contact output signal 3 operation		B		
Co.31		Contact output signal 3 selected alarm		---- (AL.01) ∗7		

∗7: Regarding the detail of the default setting, refer to “5.20Communication function”.

5.3 Main Display

5.3.1 Main Display

The current temperature and the set temperature of the circulating fluid are shown on the main display, and the main display allows the set temperature to be changed.

5.3.2 Items on the main display

Items shown below are shown on the main display.

Display: Current circulating fluid discharge temperature

1. Turn ON the power supply switch.

The current temperature and the set temperature are displayed on the digital display.

* “Alarm menu” screen is displayed when any alarm is generated. (See “5.4”)

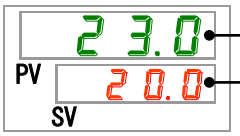

Current discharge temperature

Set Temperature

Setting: Circulating fluid temperature

2. Change the set temperature with the [▼][▲] key.

After changing the set temperature, set it by pressing the [SEL] key.

* The letters of the set value blink while the set value is being entered.
* If [SEL] key is not pressed, the value is set to the value after change 3 seconds later.

Display: Circulating fluid discharge pressure

3. Press the [SEL] key.

Circulating fluid discharge pressure is displayed on the digital display.

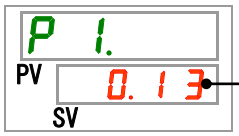

Circulating fluid discharge pressure

5.4 Alarm Menu

5.4.1 Alarm menu

The alarm display appears when an alarm is generated.

* The alarm menu is not be accessible when no alarm has been generated.
* Refer to “Chapter 7 Alarm Notification and Troubleshooting” for details of alarms.

5.4.2 Items shown on the alarm menu display

The alarm display appears when an alarm is generated.

When multiple alarms are generated, the latest alarm is displayed on the display.

Each time the [SEL] key is pressed, the alarms are displayed in order, starting from the latest one.

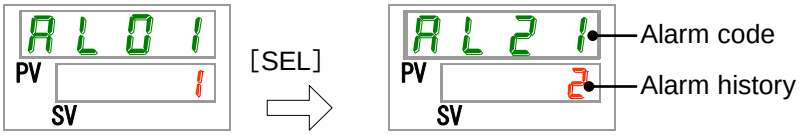

The main display is shown when the alarm is reset.

The main display is shown when [MENU] key is pressed while an alarm is being generated.

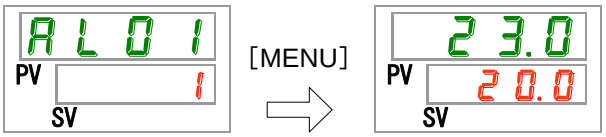

The alarm menu display is shown when [MENU] key is pressed again.

5.5 Check monitor menu

5.5.1 Check monitor menu

As a part of the daily inspection, the temperature, pressure and accumulated operating time can be checked.
Please use this for confirmation of your daily inspection.

5.5.2 Checking with the Inspection monitor menu

The table below explains the check items of the inspection monitor menu.

Table 5.5-1 Check items in the check monitor menu

Display	Item	Content
t 1.	Circulating fluid discharge temperature	Displays the circulating fluid discharge temperature. Offset temperature is not taken into consideration in this temperature.
t 2.	Circulating fluid inlet heat exchanger temperature	Displays the circulating fluid temperature at the heat exchanger inlet.
t 3.	Compressor inlet temperature	Displays the refrigerant temperature at the compressor inlet port.
P 1.	Circulating fluid discharge pressure	Displays the circulating fluid discharge pressure.
P h.	Refrigerant circuit pressure on the high pressure side	Displays the pressure on the higher pressure side of the refrigerant circuit.
P L.	Refrigerant circuit pressure on the low pressure side	Displays the pressure on the lower pressure side of the refrigerant circuit.
- - - -	Unused	-
PUMP	Accumulated operating time of the pump	Displays the accumulated operating time of the pump.
FAn.M	Accumulated operating time of the fan	Displays the accumulated operating time of the fan motor. (For air cooled type only)
rEF.	Accumulated operating time of the compressor	Displays the accumulated operating time of the compressor.
dru.	Accumulated operating time of the thermo-chiller	Displays the accumulated operating time of the thermo-chiller.
FILt.	Accumulated operating time of the dust-proof filter	Displays the accumulated operating time of the dust-proof filter.
FLoW	Circulating fluid flow rate	Displays the circulating fluid flow rate. This is not a measured value with a flow meter, and is provided as a guide.

Checking: Circulating fluid discharge temperature

1. Press and hold the [MENU] button for approximately 2 seconds.

Circulating fluid discharge temperature display "t 1." appears on the digital display.

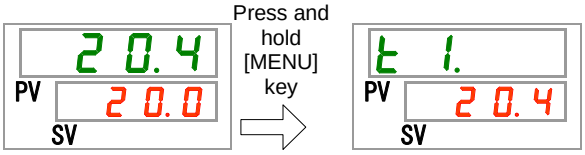

Displays the circulating fluid temperature discharged from this product to the user's equipment. Offset temperature is not taken into consideration in this temperature.

Checking: Circulating fluid temperature at the heat exchanger inlet

2. Press the [SEL] key once.

Display of the circulating fluid temperature returned to the return port appears on the digital display.

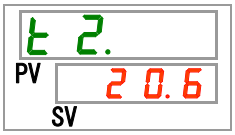

Displays the circulating fluid temperature returning from the user's equipment.

Check of the temperature of the inlet of the compressor.

3. Press the [SEL] key once.

Display of the inlet refrigerant temperature to the compressor appears on the digital display.

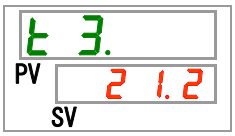

Displays the refrigerant temperature at the compressor inlet port.

Checking: Circulating fluid discharge pressure

4. Press the [SEL] key once.

Display of the circulating fluid discharge pressure appears on the digital display.

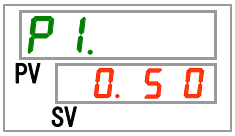

Displays the circulating fluid pressure fed from this product to the user's equipment.

Checking: Refrigerant circuit pressure on the high pressure side

5. Press the [SEL] key once.

Display of the refrigerant circuit pressure on the high pressure side appears on the digital display.

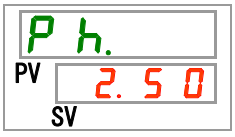

Displays the pressure of the high pressure side of the refrigerant circuit.

Checking: Refrigerant circuit pressure on the low pressure side

6. Press the [SEL] key once.

Display of the refrigerant circuit pressure on the low pressure side appears on the digital display.

Checking: Accumulated operating time of the pump

7. Press the [SEL] key once.

Display of the accumulated operating time of the pump appears on the digital display.

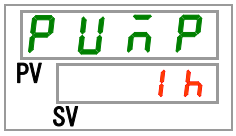

Refer to the table below for details of the display.

Table 5.5-2 Time display

Accumulated time	Displayed value
0h to 999h	0h to 999h
1,000h to 99,999h	1hh to 99hh
100,000h	Return to 0h

AL28 Pump maintenance alarm is generated when the accumulated operating time of the pump reaches 8,000 hours (8hh) (when set to “A.RUN”). For more details, refer to “Chapter 7 Alarm Notification and Troubleshooting”.

Checking: Accumulated operating time of the fan

8. Press the [SEL] key once.

Display of the accumulated operating time of the fan appears on the digital display.

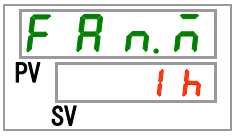

Refer to “Table 5.5-2” for the display.

AL29 Fan maintenance alarm is generated when the accumulated operating time of the fan motor reaches 30,000 hours (30hh) (when set to “A.RUN”). For details, refer to “Chapter 7 Alarm Notification and Troubleshooting”.

Checking: Accumulated operating time of the compressor

9. Press the [SEL] key once.

Display of the accumulated operating time of the compressor appears on the digital display.

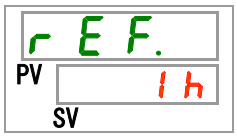

Refer to “Table 5.5-2” for the display.

AL30 Compressor maintenance alarm is generated when the accumulated operating time of the compressor reaches 30,000 hours (30 h h) (when set to “A.RUN”). For more details, refer to “Chapter 7 Alarm Notification and Troubleshooting”.

Checking: Accumulated operating time of the thermo-chiller

10. Press the [SEL] key once.

The accumulated operating time of the thermo-chiller appears on the digital display.

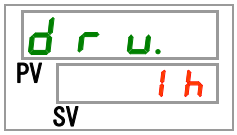

Refer to “Table 5.5-2” for the display.

Checking: Accumulated operating time of the dust-proof filter

11. Press the [SEL] key once.

Display of the accumulated operating time of the dust-proof filter appears on the digital display.

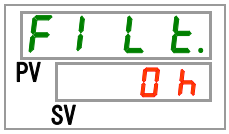

Refer to “Table 5.5-2” for the display.

AL40 Dust-proof filter maintenance alarm is generated when the accumulated operating time of the dust-proof filter reaches 500 hours (5 0 0 h) (when set to “A.RUN”). For more details, refer to “Chapter 7 Alarm Notification and Troubleshooting”.

Checking: Circulating fluid flow rate

12. Press the [SEL] key once.

Display of the circulating fluid flow rate appears on the digital display.

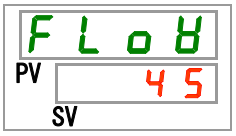

Circulating fluid flow rate of this product is displayed as a guide. Unit: L/min.

This is not a measured value, and is provided as a guide.

5.6 Key-lock

5.6.1 Key-lock

The buttons can be locked to prevent the settings being changed by an operator error. Operation can be started/stopped by operating the “RUN/STOP” key even when the button-lock is being activated.

If you try to change the set value with the “▲” key or ”▼” key while the button-lock function is activated, “LoCK” will be displayed for 1 second, and it is not possible to change the set value. (Refer to the Fig. below.)

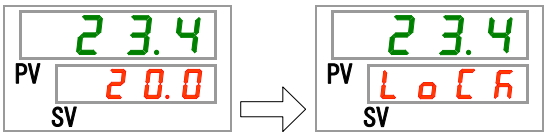

⚠ CAUTION

During key-lock setting, no other setting is available.
Release the key-lock setting for other setting.

5.6.2 Key-lock setting / checking

The table below explains the setting items of the key-lock function and the initial values.

Table 5.6-1 Set items for key -lock

Display	Item	Contents	Default
SE.01	Key-lock	Sets the key -lock function ON. When the key -lock function is set ON, no other settings are available.	OFF

1. Press and hold the [MENU] key for approximately 2 seconds.

Repeat pressing the key until the button-lock setting screen [SE.01] appears on the digital display

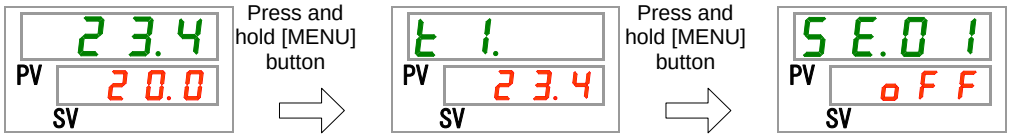

Setting/checking: key -lock function

2. Select “ON” with [▲] key or [▼] key, and enter with the “SEL” key.

Table 5.6-2 Setting of the button-lock function

Set value	Explanation	Default
oFF	key -lock function OFF	✓
on	key -lock function ON	

3. Press the [MENU] key once.

Returns to the main display (which shows the circulating fluid temperature).

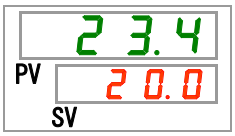

5.7 Run timer, stop timer function

5.7.1 Run timer and stop timer function

This function starts or stops operation of the product automatically when the set time has passed. The time can be set according to the user's working hours. Set the circulating fluid temperature in advance.

[Run timer] is a function to start operation after a set time. [Stop timer] is a function to stop operation after a set time. It is possible to set both [Run timer] and [Stop timer]. The set time of both the [Run timer] and [Stop timer] can be 99.5 hours at maximum, in 0.5 hour units.

[When communication is used]

If the communication mode is DIO REMOTE or SERIAL mode, this function does not operate. DIO REMOTE and SERIAL mode operation/stop signals have priority.

●Run timer

・Run timer starts operation after the set time.

If the thermo-chiller is already operating or the pump is operating independently, this function does not operate even when the set time has passed.

Operation can start when the product condition is normal and there is no alarm generated.

・The [🕘] light turns ON when the run timer is set. The [🕘] light is turned OFF when the operation is started by the run timer.

The [🕘] light does not turn OFF while the stop timer is being activated.

・The run timer setting is reset when the main power supply is cut or a power failure occurs. Please set it again.

●Stop timer

・The [🕘]light turns ON when the stop timer is set. The [🕘] light turns OFF when the operation is stopped by the stop timer.

The [🕘] light does not turn OFF while the run timer is being activated・The stop timer setting is reset when the main power supply is stopped or a power failure occurs. Please set it again.

Timer setting example

Run timer
Set to start after 3hours

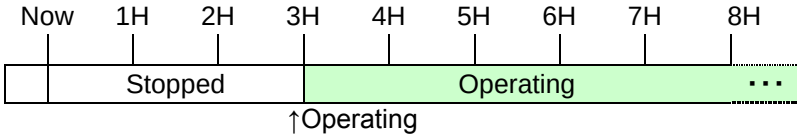

Stop timer
Set to stop after 3 hours

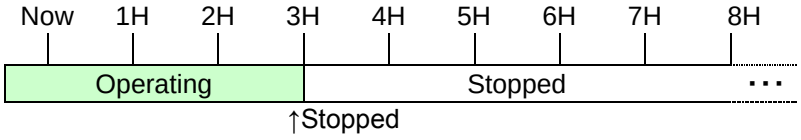

Run timer+
Stop timer
Set to start after 2 hours
Set to stop after 5.5 hours

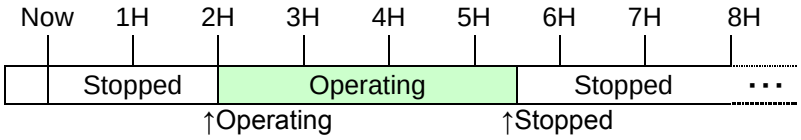

Run timer+
Stop timer
Set to stop after 2 hours
Set to start after 5.5hours

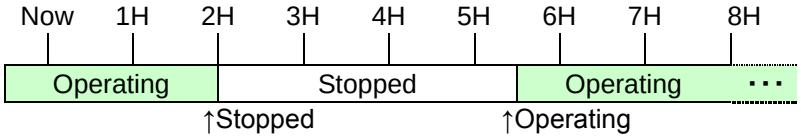

⚠ CAUTION

- **Set while the breaker is ON (while the power is supplied).**
- **The setting is released when operation is started or stopped by the timer. Resetting is necessary to use the timer next time.**
- **Run timer setting is released when the breaker or the user's power supply facility is cut, or a power failure occurs. Please set it again.**

5.7.2 Setting and checking of Run timer and stop timer function

The table below explains the setting items of the run/stop timer and the initial values.

Table 5.7-1 Setting of run timer and stop timer

Display	Item	Contents	Default
SE.02	Run timer	Sets time before the product operation starts.	0.0 H
SE.03	Stop timer	Sets time before the product operation stops.	0.0 H

This section explains how to set/check both the run timer and the stop timer in sequence. Please refer to the setting or checking instructions of the timer that is to be used.

1. Press and hold the [MENU] key for approximately 2 seconds.

Repeat pressing the button until the key -lock setting display [SE.01] appears on the digital display.

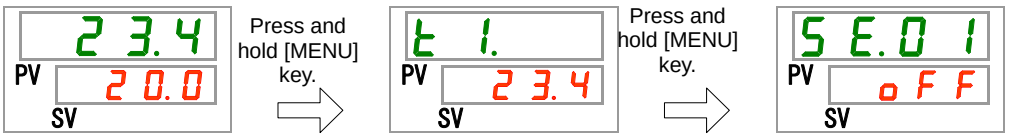

Setting/checking: Run timer

2. Press the [SEL] key once.

Setting screen of the run timer is displayed on the digital display.

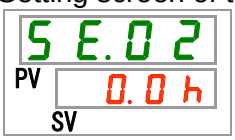

3. Select run timer with [▲] key or [▼] key, and press [SEL] button to enter.

Table 5.7-2 Setting of the run timer

Set value	Explanation	Default
0.0h	Timer OFF	✓
0.5h to 99.5h	The product will start automatically after the lapse of set time. Setting unit: 0.5 hours	

For example: Run timer setting performed at 5:30 PM on the previous day to start the product operation 14 hours later (at 7:30 AM on the next morning)

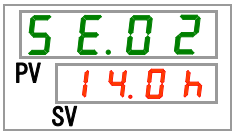

Setting/checking: Stop timer

4. Press the [SEL] key once.

Setting screen of the stop timer appears on the digital display.

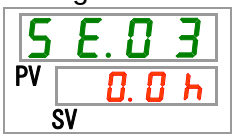

5. Select stop timer with the [▲] key or the [▼] key, and press [SEL] key to enter.

Table 5.7-3 Setting of the stop timer

Set value	Explanation	Default
0.0h	Timer OFF	✓
0.5h to 99.5h	The product will stop automatically after the lapse of set time. Setting unit: 0.5 hours	

For example: Stop timer setting performed at 4:30 PM to stop the product operation 1.5 hours later (at 6:00 PM).

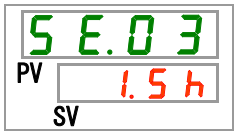

6. Press the [MENU] key once.

Returns to the display showing the circulating fluid temperature.

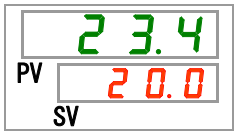

7. Once the run timer is set, keep the power supply to the product ON. The product will start automatically after the set time.

When the stop timer is set, leave the product running. The product will stop automatically after the set time.

5.8 Ready completion (TEMP READY) signal

5.8.1 Ready completion (TEMP READY) signal

This function sets a bandwidth for the set circulating fluid temperature (range between the upper and lower limit temperatures) to notify the user by communication that the circulating fluid temperature has reached the band range. The default setting of this function is “OFF”.

[Tips]

This function is available when contact input/output and serial communication is being used. Refer to the Communications Operation Manual for further details.

An example is shown below:

Set circulating fluid temperature:	20 °C
READY bandwidth (range between the upper and lower limit temperatures):	±2 °C
READY time:	60 seconds

Preparation for operation will be completed 60 seconds after the circulating fluid temperature reaches the range of 18 °C to 22 °C.

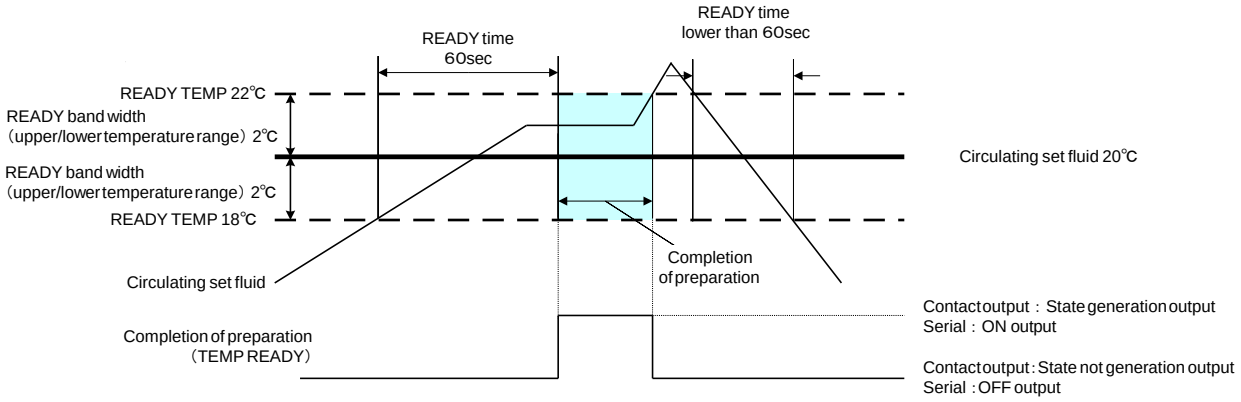

5.8.2 Ready completion (TEMP READY) signal setting / checking

The table below shows explanation and default of the set items for ready completion (TEMP READY) signal.

Table 5.8-1 Set items for ready completion (TEMP READY) signal

Display	Item	Content	Default
SE.04	READY mode	Sets ready completion (TEMP READY) signal	OFF
SE.05	READY bandwidth (range between the upper and lower limit temperatures)	Sets temperature for ready completion (TEMP READY) signal.	----
SE.06	READY time	Sets time for ready completion (TEMP READY) signal.	----

1. Press and hold the [MENU] key for approximately 2 seconds.

Repeat pressing the key until the button-lock setting display [SE.01] appears on the digital display.

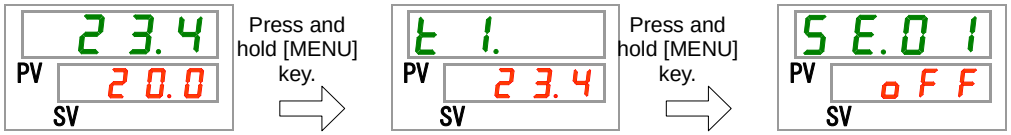

Setting/checking: READY mode

2. Press the [SEL] key 3 times.

Setting screen of READY mode appears on the digital display.

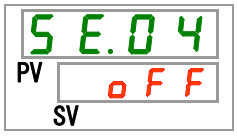

3. Select “ON” with [▲] key or [▼] key, and enter with the “SEL” key.

Table 5.8-2 Setting of READY mode

Set value	Explanation	Default
oFF	Ready completion (TEMP READY) signal OFF	✓
on	Ready completion (TEMP READY) signal ON	

Setting/checking: READY bandwidth

4. Press the [SEL] key once.

READY bandwidth (range between the upper and lower limit temperatures) setting screen appears on the digital display.

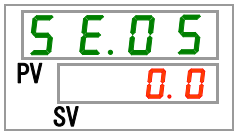

5. Select READY bandwidth with [▲] key or [▼] key, and enter by pressing the [SEL] key.

Table 5.8-3 Set value for READY mode

Set value	Explanation	Default
- - - -	Sets READY bandwidth (range between the upper and lower limit temperatures) for the set circulating fluid temperature.	
Centigrade 0.0 to 5.0	Setting of READY bandwidth (range between the upper and lower limit temperatures) for the set circulating fluid temperature.	0.0
Fahrenheit 0.0 to 9.0	Setting temperature unit for Centigrade: 0.1 °C Setting temperature unit for Fahrenheit: 0.1 °F	0.0

Setting/checking: READY time

6. Press the [SEL] key once.

Setting screen of READY time appears on the digital display.

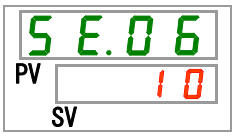

7. Set READY time with [▲] button or [▼] button, and enter with the [SEL] button.

Table 5.8-4 Set value

Set value	Explanation	Default
- - - -	Setting and checking are not available when READY mode setting is OFF.	
10 to 9999	Sets time that is to maintain the set circulating fluid temperature before starting the product operation.Setting unit: 1 second	10

8. Press the [MENU] key once.

Returns to the main display (which shows the circulating fluid temperature).

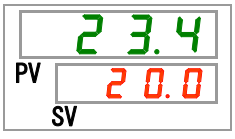

5.9 Offset function

5.9.1 Offset function

This is a function that controls the "circulating fluid display temperature" and the "target temperature for chiller temperature control" by shifting the temperature for the set offset value.

This product has three different modes of offset functions (MODE 1 to 3).

(The default setting of this function is “OFF”.)

See "Table 5.9-1 Offset function" shown below for these modes.

Refer to "5.9.2 Usage example of offset function" for operation methods.

Refer to "5.9.3 Setting/checking of offset function" for the setting instructions.

[When communication is being used]

The circulating fluid temperature sent by serial communication is the circulating fluid temperature (the circulating fluid temperature after offset) which is displayed on the thermo-chiller.

Table 5.9-1 Offset function

Offset function	Circulating fluid display temperature	Temperature control
MODE1	Displays the "circulating fluid discharge temperature".	Circulating fluid temperature is controlled to be "the set circulating fluid temperature plus offset temperature".
MODE2	Displays the temperature that is "circulating fluid discharge temperature plus offset temperature".	Circulating fluid temperature is controlled to be "the set circulating fluid temperature".
MODE3	Displays the temperature that is "circulating fluid discharge temperature minus offset temperature".	Circulating fluid temperature is controlled to be "the set circulating fluid temperature plus offset temperature".
OFF (Default)	Displays the "circulating fluid discharge temperature".	Circulating fluid temperature is controlled to be "the set circulating fluid temperature".

5.9.2 Usage example of offset function

Suppose that the circulating fluid discharge temperature of this thermo-chiller is 30 °C and the circulating fluid temperature that enters the user's equipment is 29 °C due to temperature drop while it is transferred to the user's equipment in the piping:

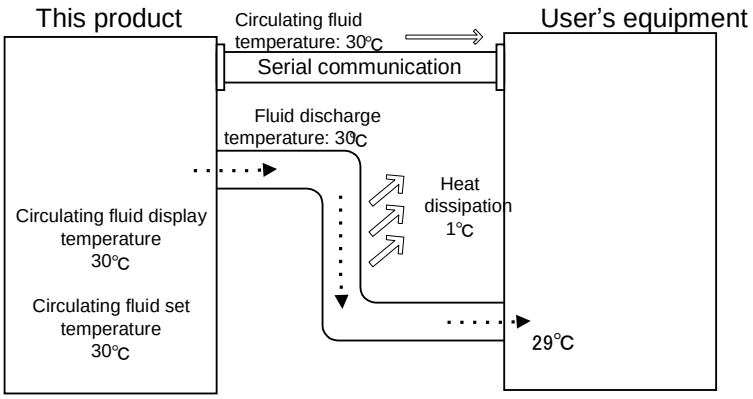

■ When only the "set circulating fluid temperature" needs to be the same as the circulating temperature supplied to the user's equipment:

Use "MODE 1" of the offset function, and set the offset temperature to "1.0" °C.

1. The thermo-chiller controls the circulating fluid temperature aiming at 31°C (set circulating fluid temperature plus offset temperature).

2. The displayed circulating fluid temperature is the fluid temperature discharged from the thermo-chiller (31 °C).

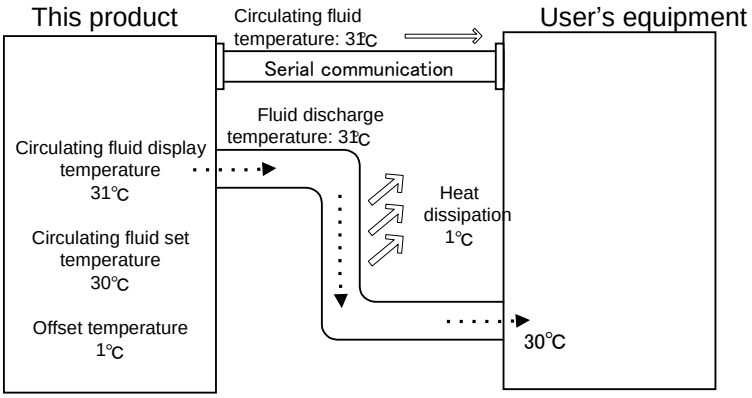

■ When only the "displayed circulating fluid temperature" needs to be the same as the circulating temperature supplied to the user's equipment:

Use "MODE 2" of the offset function, and set the offset temperature to "-1.0" ^{o}C.

1. The thermo-chiller controls the circulating fluid temperature aiming at 30°C (set circulating fluid temperature).

2. 29 ^{o}C (the actual fluid temperature of 30 ^{o}C minus the offset temperature of 1 ^{o}C) will be displayed as the circulating fluid temperature.

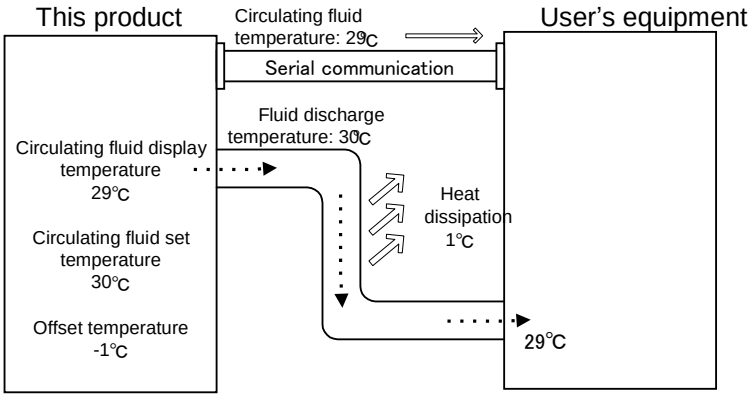

■ When both the "set circulating fluid temperature" and the "displayed circulating fluid temperature" need to be the same as the circulating temperature supplied to the user's equipment:

Use "MODE 3" of the offset function, and set the offset temperature to "1.0" ^{o}C.

1. The thermo-chiller controls the circulating fluid temperature aiming at 31°C (set circulating fluid temperature plus offset temperature).

2. The displayed circulating fluid temperature is the fluid temperature discharged from the thermo-chiller (31 ^{o}C minus the offset temperature).

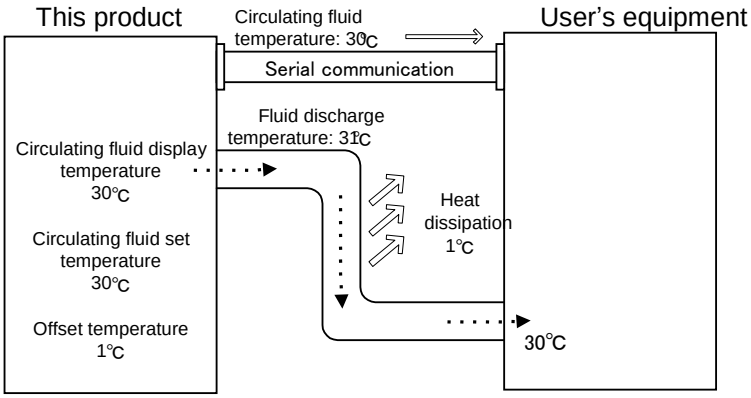

5.9.3 Setting/checking of offset function

The table below shows the set items of the offset function and the default values.

Table 5.9-2 Set items for offset function

Display	Item	Contents	Default
SE.07	Offset mode	Offset mode is set ON/OFF.	OFF
SE.08	Offset temperature	Sets offset temperature.	0.0 °C

1. Press and hold the [MENU] key for approximately 2 seconds.

Repeat pressing the key until the button-lock setting screen [SE.01] appears on the digital display.

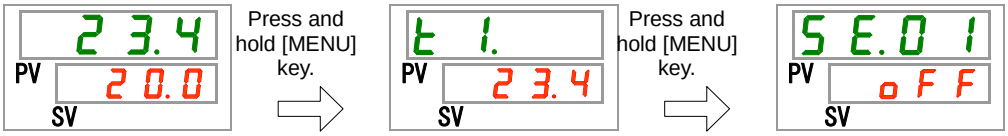

Setting/Checking: Offset mode

2. Press the [SEL] key 6 times.

Setting screen of offset mode appears on the digital display.

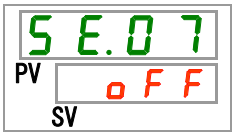

3. Select offset mode with [▲] key or [▼] key, and press the [SEL] button to enter.

Table 5.9-3 Offset function setting

Set value	Explanation	Default
oFF	Offset function OFF	✓
Ad 1	Offset mode 1	
Ad 2	Offset mede 2	
Ad 3	Offset mode 3	

4. Press the [SEL] key once.

Setting screen of offset temperature appears on the digital display.

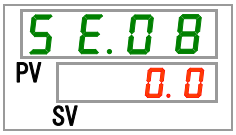

5. Set offset temperature with [▲] key or [▼] key, and press [SEL] key to enter.

Table 5.9-4 Offset temperature setting

Set value	Explanation	Default
- - - -	Setting and checking are not available when offset mode setting is OFF.	
Centigrade -20.0 to 20.0	Offset temperature is set. Setting temperature unit for Centigrade: 0.1 °C	0.0
Fahrenheit -36.0 to 36.0	Setting temperature unit for Fahrenheit: 0.1°F	0.0

CAUTION

- **This function adjusts the offset temperature in accordance with the circulating fluid discharge temperature.**
- **Circulating fluid temperature is controllable in the range of 5.0 °C to 35.0 °C (41.0 °F to 95.0 °F).**
- **Note that when the circulating temperature is set to 5.0 °C (41 °F) and the offset temperature is set to -20.0 °C (-36.0 °F), some of the offset modes automatically adjust the offset temperature to 0.0 °C (0.0 °F).**

6. Press the [MENU] key once.

Returns to the main display (which shows the circulating fluid temperature).

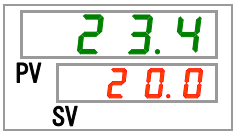

5.10 Operation Restoration after Power Failure

5.10.1 Operation restoration function after power failure

When the power supply is cut due to power failure, etc., this function restarts the operation when the power supply restores, retaining the conditions before the power cut.

[When communication is being used]

If the communication mode is DIO REMOTE or SERIAL mode (MODBUS), this function does not operate. DIO REMOTE and SERIAL mode (MODBUS) operation/stop signals have priority.

The [⟳] light turns ON when the operation restoration function is set. The default setting of this function is “OFF”. (AL41 “Power stoppage” alarm does not occur.)

5.10.2 Setting/checking of the operation restoration function

The table below shows the setting items of the operation restoration after power failure function and the default setting.

Table 5.10-1 Set item for operation restoration after power failure function

Display	Item	Contents	Default
SE.09	Operation restoration after power failure	Sets operation restoration after power failure function.	OFF

1. Press and hold the [MENU] key for approximately 2 seconds.

Repeat pressing the key until the key -lock setting screen [SE.01] appears on the digital display.

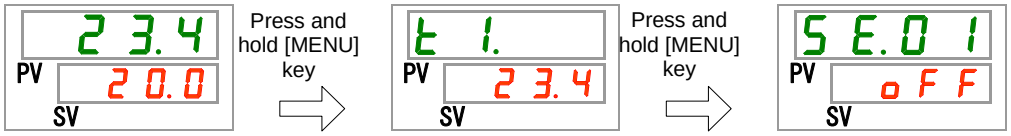

Setting/Checking: Operation restoration after power failure function

2. Press the [SEL] key 8 times.

Setting screen of operation restoration after power failure function appears on the digital display.

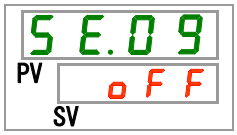

3. Select operation restoration function after power failure with [▲] key or [▼] key, and press [SEL] key to enter.

Table 5.10-2 Setting of “Operation restoration after power failure function”

Set value	Explanation	Initial value (Default setting)
oFF	Operation restoration after power failure function OFF	✓
on	Operation restoration after power failure ON	

4. Press the [MENU] key once.

Returns to the main display (which shows the circulating fluid temperature).

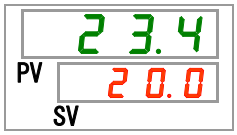

5.11 Anti-freezing function

5.11.1 Anti-freezing function

CAUTION

Keep the power supply ON for this function. This function does not start when the power is OFF.

This function prevents freezing of the circulating fluid while the product stops operation in the winter season with heat generated by automatically operating the pump.

When there is a possibility of the circulating fluid freezing due to changes in the installation or operating environment (e.g. season, weather), set this function ON in advance.

- If the circulating fluid temperature falls down to 3 °C or less, the pump starts operation automatically.
- Heat generated by the pump operation warms up the circulating fluid.
  When the circulating fluid temperature reaches 5 °C or higher, the pump stops operation automatically.
- Repeated automatic operation start and stop of the pump maintains the circulating fluid temperature to 3 °C to 3 °C to prevent the circulating fluid from being frozen.

When the anti-freezing function is set ON, the [RUN] light blinks every 2 seconds while the pump is in the standby state (while the pump stops operation). The [RUN] light blinks every 0.3 seconds during the automatic operation of the pump. The default setting of this function is “OFF”.

This function does not prevent the automatic water fill circuit from being frozen. Countermeasures against freezing of the automatic water fill circuit should be taken with the user's equipment.

Note that when the warming up function is ON, the warming up function has a priority over the anti-freezing function, and the anti-freezing function will not be activated. (See “5.17 Warming up function”)

CAUTION

- **This function can be activated only when the power supply is ON and the thermo-chiller is not operating.**
- **Fully open the valve or manual bypass valve that is arranged by the user to make it possible for the circulating fluid to circulate when the pump starts automatic operation.**
- **In extremely cold weather, the heat generated by the pump operation may not be enough to prevent freezing of the circulating fluid.**
- **During the automatic operation, the pump does not stop even if the "RUN/STOP" button is pressed. To stop the pump, turn the power supply OFF or turn this function OFF.**
- **This function does not prevent the automatic water fill circuit from being frozen. Countermeasures against freezing of the automatic water fill circuit should be taken with the user's equipment.**

5.11.2 Setting/checking of anti-freezing function

The table below shows the set item of the anti-freezing function and the default setting.

Table 5.11-1 Set item for anti-freezing function

Display	Item	Contents	Default
SE.10	Anti-freezing function	Sets anti-freezing function ON/OFF.	OFF

1. Press and hold the [MENU] key for approximately 2 seconds.

Repeat pressing the key until the key-lock setting screen [SE.01] appears on the digital display.

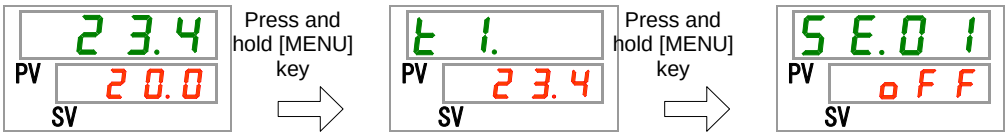

Setting/Checkign: Anti-freezing function

2. Press the [SEL] key 9 times.

Setting screen of anti-freezing function appears on the digital display.

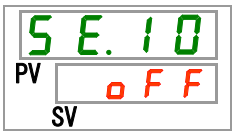

3. Select anti-freezing function with [▲] key or [▼] key, andpress [SEL] button to enter.

Table 5.11-2 Setting of anti-freezing function

Set value	Explanation	Default
oFF	Anti-freezing function OFF	✓
on	Anti-freezing function ON	

4. Press the [MENU] key once.

Returns to the main display (which shows the circulating fluid temperature).

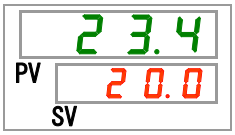

5.12 Key Operation Sound Setting

5.12.1 Key operation sound setting

Operation sound (click sound) of the buttons on the operation panel can be set ON/OFF.

Default setting is button operation sound “ON”.

5.12.2 Setting/checking of the button operation sound

The table below shows the set item for button operation sound and the default setting.

Table 5.12-1 Set item for button operation sound

Display	Item	Contents	Default
SE.11	Button operation sound	Sets button operation sound ON/OFF.	ON

1. Press and hold the [MENU] button for approximately 2 seconds.

Repeat pressing the button until the button-lock setting screen [SE.01] appears on the digital display.

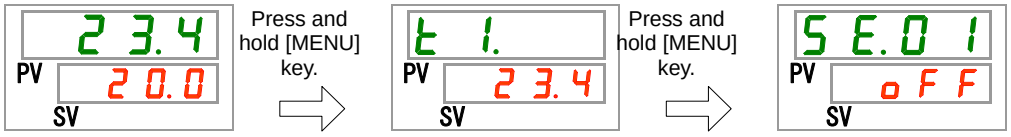

Setting/Checking: Button operation sound

2. Press the [SEL] button 10 times.

Setting screen of button operation sound appears on the digital display.

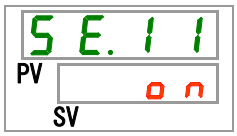

3. Set the button operation sound On/OFF with [▲] button or [▼] button, and press the “SEL” button to enter.

Table 5.12-2 Setting for button operation sound

Set value	Explanation	Default
oFF	Button operation sound OFF	
on	Button operation sound ON	✓

4. Press the [MENU] button once.

Returns to the main display (which shows the circulating fluid temperature).

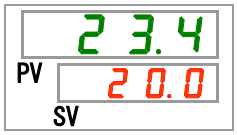

5.13 Temperature unit Change

5.13.1 Temperature unit change

The temperature unit used for the thermo-chiller can be selected Celsius (^{o}C) or Fahrenheit (^{o}F). This setting determines the temperature unit which is displayed/output. The default setting is Celsius (^{o}C).

-This feature is not valid with Option W, the unit is fixed at centigrade (^{o}C).

5.13.2 Setting/checking of temperature unit change

The table below shows the set item for the temperature unit change and the default setting.

Table 5.13-1 Set item for temperature unit change

Display	Item	Contents	Default
SE.12	Temperature unit	Sets temperature unit.	^{o}C

1. Press and hold the [MENU] key for approximately 2 seconds.

Repeat pressing the key until the key-lock setting screen [SE.01] appears on the digital display.

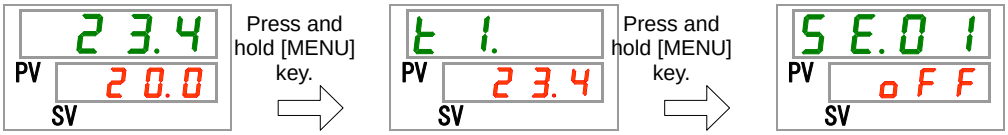

Setting/Checking: Temperature unit

2. Press the [SEL] key 11 times.

Setting screen of temperature unit appears on the digital display.

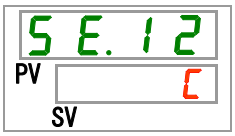

3. Select a temperature unit with [▲] key or [▼] key, and press [SEL] key to enter.

Table 5.13-2 Set items for temperature unit

Set value	Explanation	Default
C	Sets the temperature unit to Celsius (^{o}C).	✓
F	Sets the temperature unit to Fahrenheit (^{o}F).	

4. Press the [MENU] key once.

Returns to the main display (which shows the circulating fluid temperature).

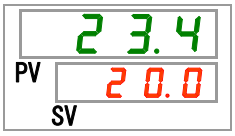

5.14 Pressure unit Change

5.14.1 Pressure unit change

Pressure unit used for the thermo-chiller can be selected MPa or PSI. This setting determines the pressure unit which is displayed/output. The default setting is MPa.

-This feature is not valid with Option W, the unit is fixed at MPa.

5.14.2 Setting/checking of pressure unit change

The table below shows the set item for the pressure unit change and the default setting.

Table 5.14-1 Set item for pressure unit change

Display	Item	Contents	Default setting
SE.13	Pressure unit	Sets pressure unit.	MPa

1. Press and hold the [MENU] key for approximately 2 seconds.

Repeat pressing the key until the key-lock setting screen [SE.01] appears on the digital display.

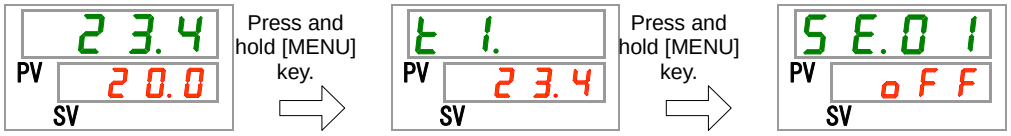

Setting/Checking: Pressure unit

2. Press the [SEL] key 12 times.

Setting screen of temperature unit appears on the digital display.

3. Select a pressure unit with [▲] key or [▼] key, and press [SEL] button to enter.

Table 5.14-2 Setting for pressure unit

Set value	Explanation	Default
nPA	Sets the pressure unit to MPa.	✓
PSI	Sets the pressure unit to PSI.	

4. Press the [MENU] key once.

Returns to the main display (which shows the circulating fluid temperature).

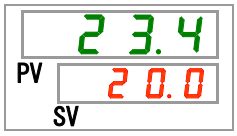

5.15 Data reset function

5.15.1 Data reset function

Resets the values set by user to the default values. Note that the accumulated operating time will not be reset.

⚠ CAUTION

This function resets all the set values.
Use caution when operating this function.
It is recommended to record the set data before resetting.

5.15.2 How to operate reset function

The table below shows the set item for data reset and the default setting.

Table 5.15-1 Set item for data reset

Display	Item	Contents	Default
SE.14	Data reset	Resets all the data. (Accumulated operation time will not be reset.)	OFF

1. Press and hold the [MENU] button for approximately 2 seconds.

Repeat pressing the button until the button-lock setting screen [SE.01] appears on the digital display.

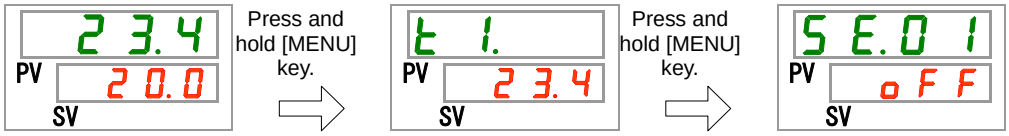

Data reset

2. Press the [SEL] button 13 times.

Data reset screen appears on the digital display.

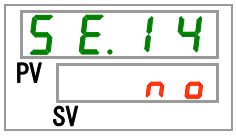

3. Select YES with [▲] button or [▼] button, and press [SEL] button to enter. Select YES and press [SEL] button to enter. This resets all the data to the default, and the display returns to the main display.

Table 5.15-2 Data reset

Set value	Explanation	Default
no	No data reset.	✓
YES	Resets all the data.	

5.16 Accumulated Operating Time Reset Function

5.16.1 Accumulated operating time reset function

The alarms shown below will be generated to notify the maintenance timing. The thermo-chiller does not stop operation for these alarms.

- Pump maintenance (AL28): Generated after 8,000 hours of accumulated operating time.
- Fan motor maintenance (AL29): Generated after 30,000 hours of accumulated operating time.
- Compressor maintenance (AL30): Generated after 30,000 hours of accumulated operating time
- Dust-proof filter maintenance (AL40): Generated after 500 hours of accumulated operating time.

To cancel the alarm, the accumulated operating time needs to be reset. Reset the accumulated operation time after replacing the parts (ask for service). It will start counting the accumulated operating time from the beginning.

5.16.2 How to operate accumulated operating time reset function

The table below shows the details of the accumulated operating time to be reset and the default settings.

Table 5.16-1 Accumulated operating time to be reset

Display	Item	Contents	Default
SE.15	Reset of accumulated operating time of the pump	Resets the accumulated operating time of the pump.	NO
SE.16	Reset of accumulated operating time of the fan	Resets the accumulated operating time of the fan.	NO
SE.17	Reset of accumulated operating time of the compressor	Resets the accumulated operating time of the compressor.	NO
SE.30	Reset of accumulated operating time of the dust-proof filter	Resets the accumulated operating time of the dust-proof filter.	NO

Refer to the corresponding paragraph for how to reset the accumulated operating time of the required item.

Reset of accumulated operati time of the pump

1. Press and hold the [MENU] key for approximately 2 seconds.

Repeat pressing the key until the key-lock setting screen [SE.01] appears on the digital display.

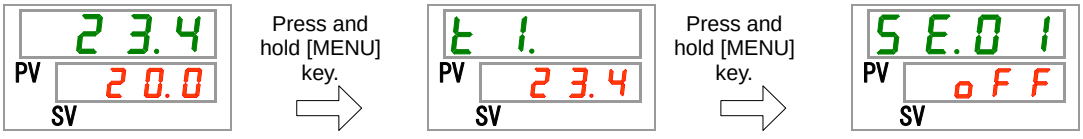

2. Press the [SEL] key 14 times.

Resetting screen of the pump accumulated operating time appears on the digital display.

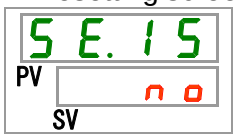

3. Select [YES] with [▲] key or [▼] key, and press [SEL] key to enter. Select [YES] and press [SEL] key to enter, and the accumulated operating time of the pump will be reset. The display returns to the main menu.

Table 5.16-2 Resetting of accumulated operating time of the fan

Set value	Explanation	Default
no	No data reset.	✓
YES	Resets the accumulated operating time of the pump.	

Reset of accumulated operating time of the fan

4. Press and hold the [MENU] key for approximately 2 seconds.

Repeat pressing the key until the key -lock setting screen [SE.01] appears on the digital display.

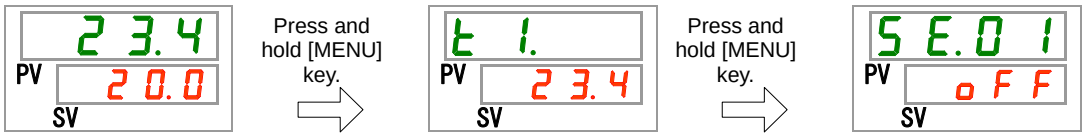

5. Press the [SEL] key 15 times.

Resetting screen of the fan accumulated operating time appears on the digital display.

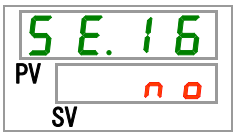

6. Select [YES] with [▲] key or [▼] key, and press “SEL” key to enter. Select [YES] and press [SEL] key to enter, and the accumulated operating time of the fan will be reset. The display returns to the main menu.

Table 5.16-3 Reset setting

Set value	Explanation	Default
no	No data reset.	✓
YES	Resets the accumulated operating time of the fan.	

Reset of accumulated operating time

7. Press and hold the [MENU] key for approximately 2 seconds.

Repeat pressing the key until the button-lock setting screen [SE.01] appears on the digital display.

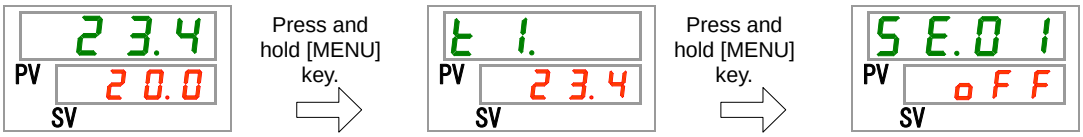

8. Press the [SEL] key 16 times.

Resetting screen of the compressor accumulated operating time appears on the digital display.

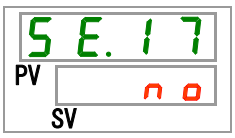

9. Select YES with [▲] key or [▼] key, and press [SEL] key to enter. Select YES and press [SEL] key to enter, and the accumulated operating time of the compressor will be reset. The display returns to the main menu.

Table 5.16-4 Reset setting

Set value	Explanation	Default
no	No data reset.	✓
YES	Resets the accumulated operating time of the compressor.	

Reset of the accumulated operating time of the dust-proof filter

10. Press and hold the [MENU] key for approximately 2 seconds.

Repeat pressing the key until the button-lock setting screen [SE.01] appears on the digital display.

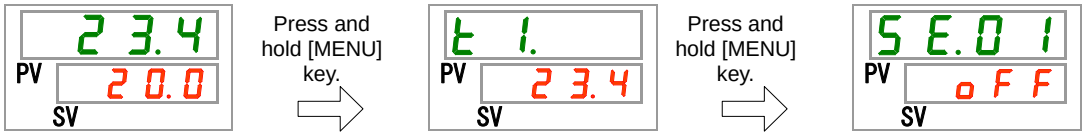

11. Press the [SEL] key 29 times.

Resetting screen of the accumulated operating time of the dust-proof filter appears on the digital display.

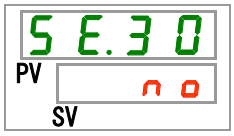

12. Select YES with [▲] key or [▼] key, and press [SEL] key to enter. Select YES and press [SEL] key to enter, and the accumulated operating time of the dust-proof filter will be reset. The display returns to the main menu.

Table 5.16-5 Reset setting

Set value	Explanation	Default
no	No data reset.	✓
YES	Resets the accumulated operating time of the dust-proof fiter.	

5.17 Warming up function

5.17.1 Warming up function

CAUTION

Keep the power supply ON for this function.
This function does not operate when the power is OFF.

This function maintains the circulating fluid temperature to the set warming-up temperature with heat generated by automatically operating the pump in the winter season or at night.

When the time required for increasing the temperature of the circulating fluid needs to be shortened at startup, set this function ON in advance.

- The pump automatically keeps operating until the circulating fluid temperature becomes 2 °C higher than the set warming up temperature.
- The pump automatically stops operating when the circulating fluid temperature becomes 2 °C higher than the set warming up temperature.
- The pump automatically restarts operating when the circulating fluid temperature decreases 2 °C lower than the set warming up temperature.

When the warming up function is set ON, the [RUN] light repeats turning ON for 0.5 seconds and OFF for 3 seconds while it is on standby (when the pump is not operating).

The [RUN] light blinks every 0.3 seconds during the automatic operation of the pump.

The default setting of this function is “OFF”.

Note that when the warming up function is ON, the warming up function has a priority over the anti-freezing function, and the anti-freezing function will not be activated.

CAUTION

- **This function can be activated only when the power supply is ON and the thermo-chiller is not operating.**
- **Fully open the valve or manual by-pass valve that is arranged by the user to make it possible for the circulating fluid to circulate when the pump starts automatic operation.**
- **In extremely cold weather, the circulating fluid temperature may not increase to the set temperature.**
- **During the automatic operation, the pump does not stop operation even if the "RUN/STOP" button is pressed.**
- **To stop the pump, turn the power supply OFF or turn this function OFF.**

5.17.2 Setting/checking of warming up function

The table below shows the setting items of the warming up function and the default setting.

Table 5.17-1 Set item for warming up function

Display	Item	Content	Initial value (Default setting)
SE.27	Warming up function	Sets warming up function ON/OFF.	OFF

1. Press and hold the [MENU] key for approximately 2 seconds.

Repeat pressing the key until the key-lock setting screen [SE.01] appears on the digital display.

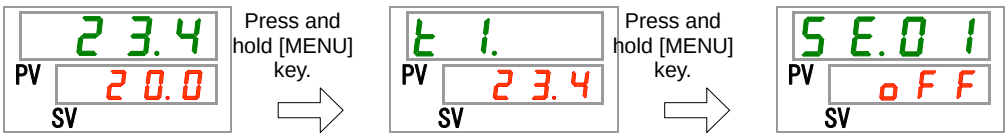

Setting/Checking: Warming up function

2. Press the [SEL] key 26 times.

Setting screen of warming up function is displayed on the digital display.

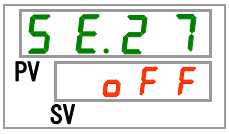

3. Set the warming up function with [▲] key or [▼] key, and press [SEL] key to enter.

Table 5.17-2 Setting of warming up function

Set value	Explanation	Initial value (Default setting)
oFF	Warming up function OFF	✓
on	Warming up function ON	

Setting/Checking: Set warming up temperature

4. Press the [SEL] key once.

Setting screen of warming up temperature appears on the digital display.

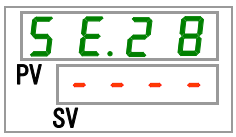

5. Set the warming up temperature with [▲] key or [▼] key, and press [SEL] key to enter.

Table 5.17-3 Setting of warming up temperature

Set value	Explanation	Initial value (Default setting)
- - - -	Setting and checking are not available when the warming up function is set OFF.	
Centigrade 10.0 **to** 35.0	Sets the warming up temperature. Setting temperature unit for Centigrade: 0.1 °C	20.0
Fahrenheit 50.0 **to** 95.0	Setting temperature unit for Fahrenheit: 0.1 °F	68.0

6. Press the [MENU] key once.

Returns to the main display (which shows the circulating fluid temperature.

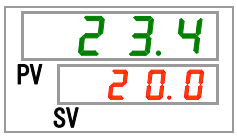

5.18 Alarm buzzer sound setting

5.18.1 Alarm buzzer sound setting

This sets whether a warning sound is made or not when alarm signal is output.

The default setting is buzzer sound ON.

5.18.2 Setting/checking of alarm buzzer sound

The table below shows the set item of the alarm buzzer sound and the default setting.

Table 5.18-1 Set item for alarm buzzer sound

Display	Item	Contents	Initial value (Default setting)
A5.01	Alarm buzzer sound	Sets alarm buzzer sound ON/OFF.	ON

1. Press and hold the [MENU] key for approximately 2 seconds.

Repeat pressing the key until the alarm buzzer setting screen [A5.01] appears on the digital display.

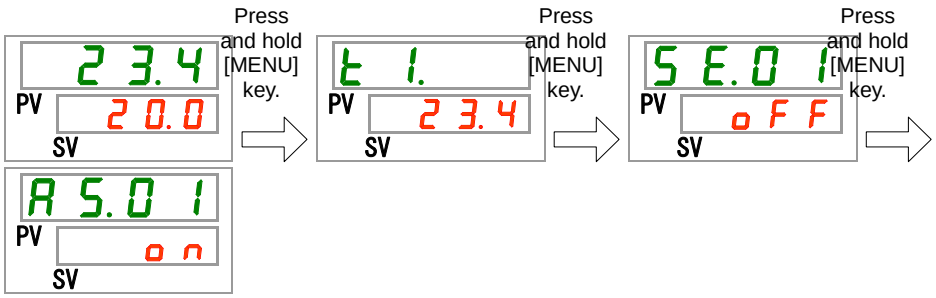

Setting/Checking: Alarm buzzer sound

2. Select alarm buzzer sound ON or OFF with [▲] key or [▼] key, and press [SEL] key to enter.

Table 5.18-2 Alarm buzzer sound setting

Set value	Explanation	Initial value (Default setting)
oFF	Alarm buzzer sound OFF	
on	Alarm buzzer sound ON	✓

3. Press the [MENU] key once.

Return to the main display (which shows the circulating fluid temperature).

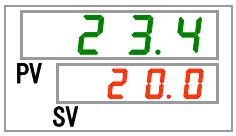

5.19 Alarm customizing function

5.19.1 Alarm customizing function

Operation and trigger level when an alarm signal is output can be customized. Perform settings depending on the application of the user. Refer to “Table 5.16-1 Accumulated operating time to be reset” and “Table 5.16-2 Resetting of accumulated operating time of the fan” for the items that can be customized for each alarm.

1. Alarm operations (See the table 5.20-1, 2, 3, 4 Alarm initial setting and customizing)

A.STP: Operation of compressor, fan, and pump stop *1

A.RUN: Operation of compressor, fan, and pump continues.

P.RUN: Compressor and fan stop operation, and pump continues operation. *1 and 2

OFF: This alarm will not be generated.

- Symbol or each operation
  - ○ : Initial setting
  - ● : Possible to select
  - - : Impossible to select

*1: Fan when the anti-snow coverage function is ON operates as explained in "5.19 Anti-Snow Coverage Function".

*2: The alarm operations of all the object alarms of the P.RUN cannot be customized individually but collectively.

2. Alarm thresholds and others (In the table 5.20-1, 2, 3, 4 Alarm setting and customizing)

This shows the settable range. Settings can be changed from default within this range.

Settings shown with "-" cannot be changed.

Table 5.19-1 Alarm setting and customizing (1/4)

Code	Alarm name	①Alarm operations					②Alarm threshold and others∗1		
		Display	A.STP	A.RUN	P.RUN	OFF	Display	Default setting	Settable range
AL01	Low level in tank	A5.02	●	○	-	-	-	-	
AL02	High circulating fluid discharge temp	-	○	-	-	-	-	-	
AL03	Circulating fluid discharge temp. rise	A5.03	●	○	-	●	A5.04	Temperature 40.0°C (104.0°F) (----)∗2	5.0 to 55.0°C (41.0 to 131.0°F)
							A5.21	Monitoring method 0	0 to 3
							A5.22	Monitoring start timer ---- (0)∗3	0 to 600 minutes
							A5.23	Range over detection timer 5	5 to 999 seconds

∗1: Values in °F are displayed when SE12 is set to F.
∗2: Default value when AS03 is set OFF.
∗3: Default value when AS21 is set to either 2 or 3.

Table 5.19-2 Alarm setting and customizing (2/4)

Code	Alarm name	①Alarm operations					②Alarm threshold and others∗4		
		Display	A.STP	A.RUN	P.RUN	OFF	Display	Default setting	Settable range
AL04	Circulating fluid discharge temp. drop	A5.05	●	○	-	●	A5.06	Set temperature 1.0°C (33.8°F) (----)∗5	1.0～34.0°C (33.8～93.2°F)
							A5.21	Monitoring method 0	0～3
							A5.22	Monitoring start timer ----(0)∗6	0 to 600 minutes
							A5.23	Range over detection timer 5	5 to 999 seconds
AL05	High circulating return temp.	-	○	-	-	-	-	-	
AL06	High circulating fluid discharge pressure	-	○	-	-	-	-	- ∗9	
AL07	Abnormal pump operation	-	○	-	-	-	-	- ∗9	
AL08	Circulating fluid discharge pressure rise	A5.07	○	●	-	●	A5.08	Set pressure 0.55MPa (80PSI) (----)∗7	0.05 to 0.6MPa (7 to 87PSI)
AL09	Circulating fluid discharge pressure drop	A5.09	○	●	-	●	A5.10	Set pressure 0.05MPa (7PSI) (----)∗8	0.05 to 1.00MPa (7 to 145PSI)
AL10	High compressor suction temp.	A5.24	●	-	○	-	-	-	
AL11	Low compressor suction temp.	A5.24	●	-	○	-	-	-	
AL12	Low super heat temperature	A5.24	●	-	○	-	-	-	
AL13	High compressor discharge pressure	A5.24	●	-	○	-	-	-	
AL15	Refrigerant circuit pressure (high pressure side) drop	A5.24	●	-	○	-	-	-	
AL16	Refrigerant circuit pressure (low pressure side) rise	A5.24	●	-	○	-	-	-	

∗4: Values are shown in °F when the unit is set to F for SE12, and in PSI when the unit is set to PSI for SE13.
∗5: Default value when AS05 is set OFF.
∗6: Default value when AS21 is set to either 2 or 3.
∗7: Default value when AS07 is set OFF.
∗8: Default value when AS09 is set OFF.
∗9 : AL06, AL07, AL08, AL09 are disabled when AS25 is set to A.RUN. (AL06, AL07, AL08, and AL09 will not be generated)

Table 5.19-3 Alarm setting and customizing (2/4)

Code	Alarm name	①Alarm operations					②Alarm threshold and others		
		Display	A.STP	A.RUN	P.RUN	OFF	Display	Default setting	Settable range
AL17	Refrigerant circuit pressure (low pressure side) drop	A5.24	●	-	○	-	-	-	
AL18	Compressor running failure	A5.24	●	-	○	-	-	-	
AL19	Communication error	A5.11	●	●	-	○	A5.12	Monitoring time ---- (30) ∗10	Monitoring time 30 ～ 600 seconds
AL20	Memory error	-	○	-	-	-	-	-	
AL21	DC line fuse cut	A5.15	○	●	-	-	-	-	
AL22	Circulating fluid discharge temp. sensor failure	-	○	-	-	-	-	-	
AL23	Circulating fluid return temp. sensor failure	-	○	-	-	-	-	-	
AL24	Compressor suction temp. sensor failure	A5.24	●	-	○	-	-	-	
AL25	Circulating fluid discharge pressure sensor failure	A5.25	○	●	-	●	-	-	
AL26	Compressor fluid discharge pressure sensor failure	A5.24	●	-	○	-	-	-	
AL27	Compressor suction pressure sensor failure	A5.24	●	-	○	-	-	-	
AL28	Pump maintenance	A5.26	-	●	-	○	-	-	
AL29 ∗11	Fan maintenance	A5.27	-	●	-	○	-	-	
AL30	Compressor maintenance	A5.28	-	●	-	○	-	-	
AL31	Contact input 1 signal detection	A5.13	○	●	-	●	-	-	
AL32	Contact input 2 signal detection	A5.14	○	●	-	●	-	-	
AL37	Compressor discharge temp. sensor failure	A5.24	●	-	○	-	-	-	
AL38	Compressor discharge temp. rise	A5.24	●	-	○	-	-	-	

*10: Default value when AS11 is set to either A.STP or A.RUN.

*11: Water-cooled type model does not generate this alarm.

Table 5.19-4 Alarm setting and customizing (2/4)

Code	Alarm name	①Alarm operations					②Alarm threshold and others		
		Display	A.STP	A.RUN	P.RUN	OFF	Display	Default setting	Settable range
AL40	Dust-proof filter maintenance	A 5.2 9	-	○	-	●	-	-	
AL41	Power stoppage	A 5.3 0	○	-	-	●	-	-	
AL42	Compressor waiting	-	-	○	-	-	-	-	
AL43 *12	Fan failure	A 5.2 4	●	-	○	-	-	-	
AL45 *12	Compressor over current	A 5.2 4	●	-	○	-	-	-	
AL47	Pump over current	A 5.2 4	○	-	-	-	-	-	
AL50	Incorrect phase error	-	○	-	-	-	-	-	
AL51	Phase board over current	-	○	-	-	-	-	-	

*12: Water-cooled type model does not generate this alarm.

⚠ CAUTION

When the operation setting for the alarm that has been set to A.STP as default is changed to A.RUN or OFF, the product operation will not stop even when the alarm is generated. Keeping operation of the product even after an alarm is generated may cause failure. Remove the causes of the alarm as soon as possible.
Be sure to remove the cause of the alarm immediately after the alarm occurred. Otherwise it may cause a malfunction of the product.

5.19.2 Setting and checking of the alarm customizing function

The table below shows the set items of the alarm customizing function and the default settings.

Table 5.19-5 Default settings of the alarm customizing function (1/3)

Display	Content	Object alarm		Change content	Default setting*1
		Code	Alarm name		
A5.02	Operation setting when "Low level in tank" alarm is generated	AL01	Low level in tank	Product operation while the alarm is being generated	A.RUN
A5.03	Operation setting when "Detection temp. for the circulating fluid discharge temp. rise" alarm is generated	AL03	Circulating fluid discharge temp. rise	Product operation while the alarm is being generated	A.RUN
A5.04	Threshold temperature setting for "Detection temp. for the circulating fluid discharge temp. rise" alarm			Alarm threshold	40.0 °C (104.0°F) (----)
A5.05	Operation setting when "Detection temp. for the circulating fluid discharge temp. drop" alarm is generated	AL04	Circulating fluid discharge temp. drop	Product operation while the alarm is being generated	A.RUN
A5.06	Threshold temperature setting for "Detection temp. for the circulating fluid discharge temp. drop" alarm			Alarm threshold	1.0 °C (33.8°F) (----)
A5.07	Operation setting when "Circulating fluid discharge pressure rise" alarm is generated	AL08	Circulating fluid discharge pressure rise	Product operation while the alarm is being generated	ASTP
A5.08	Threshold pressure setting for "Circulating fluid discharge pressure rise" alarm			Alarm threshold	0.55MPa (80PSI)
A5.09	Operation setting when "Circulating fluid discharge pressure decrease" alarm is generated	AL09	Circulating fluid discharge pressure drop	Product operation while the alarm is being generated	A.STP
A5.10	Threshold pressure setting for "Circulating fluid discharge pressure decrease" alarm			Alarm threshold	0.05MPa (7PSI) (----)
A5.11	Operation setting when "Communication error" alarm is generated	AL19	Communication error	Product operation while the alarm is being generated	OFF
A5.12	Threshold monitoring time setting for "Communication error"			Alarm threshold	---- (30)
A5.13	Setting function for "Contact input signal 1" detection	AL31	Contact input 1 signal detection	Product operation while the alarm is being generated	A.STP
A5.14	Setting function for "Contact input signal 2" detection	AL32	Contact input 2 signal detection	Product operation while the alarm is being generated	A.STP

*1: Regarding the detail of the default setting, refer to “Table 5.19-1 Alarm setting and customizing (1/4)~(4/4)”.

Table 5.19-6 Default settings of the alarm customizing function (2/3)

Display	Content	Object alarm		Change content	Default setting
		Code	Alarm name		
A5.15	Operation setting when "DC line fuse cut" alarm is generated	AL21	DC line fuse cut	Product operation while the alarm is being generated	A.STP
A5.21	Temperature alarm monitoring mode setting	AL03	Circulating fluid discharge temp. rise	Monitoring method	0
		AL04	Circulating fluid discharge temp. drop		
A5.22	Monitoring start timer	AL03	Circulating fluid discharge temp. rise	Alarm will not be generated during the set period of time after starting operation. Alarm monitoring starts when the set time has passed.	---- (0)
		AL04	Circulating fluid discharge temp. drop		
A5.23	Range over detection timer	AL03	Circulating fluid discharge temp. rise	An alarm will not be generated for the set period of time after the circulating fluid discharge temperature becomes out of the set range.	5
		AL04	Circulating fluid discharge temp. drop		
A5.24	Compressor stop alarm	AL10	High compressor intake temp.	Alarm operation	P.RUN
		AL11	Low compressor intake temp.		
		AL12	Low super heat temp.		
		AL13	High compressor discharge pressure		
		AL15	Refrigerant circuit pressure (high pressure side) drop		
		AL16	Refrigerant circuit pressure (low pressure side) rise		
		AL17	Refrigerant circuit pressure (low pressure side) drop		
		AL18	Compressor running failure		
		AL24	Compressor intake temp. sensor failure		
		AL26	Compressor discharge pressure sensor failure		
		AL27	Compressor intake pressure sensor failure		
		AL37	Compressor discharge temp. sensor failure		
		AL38	Compressor discharge temp. rise		
		AL43 *2	Fan failure		
		AL45	Compressor over current		

∗2: This alarm does not occur on the product of water cooled type.

Table 5.19-7 Default settings of the alarm customizing function (3/3)

Display	Content	Object alarm		Change content	Initial setting
		Code	Alarm name		
A 5.2 5	Operation setting when "Circulating fluid discharge pressure sensor error" alarm is generated	AL25	Circulating fluid discharge pressure sensor failure	Product operation while the alarm is being generated	A.STP
A 5.2 6	Operation setting during maintenance of the pump	AL28	Pump maintenance	Product operation while the alarm is being generated	OFF
A 5.2 7	Operation setting during maintenance of the fan	AL29 *3	Fan maintenance	Alarm operation	OFF
A 5.2 8	Operation setting during maintenance of the compressor	AL30	Compressor maintenance	Product operation while the alarm is being generated	OFF
A 5.2 9	Operation setting during maintenance of the dust-proof filter	AL40	Dust-proof filter maintenance	Product operation while the alarm is being generated	OFF
A 5.3 0	Operation setting at a time of operation restoration after power failure	AL41	Power stoppage	Product operation while the alarm is being generated	A.STP
A 5.3 1	Monitoring time for maintenance of dust-proof filter	AL40 *3	Dust-proof filter maintenance	Alarm threshold	---- (500 h)

∗3: This alarm does not occur on the product of water cooled type.

1. Press and hold the [MENU] key for approximately 2 seconds.

Repeat pressing the key until the alarm buzzer sound setting screen [A5.01] appears on the digital display.

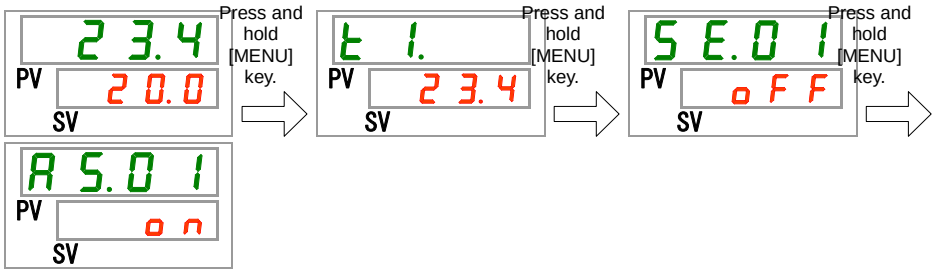

Setting/Checking: Operation setting when "Low level in tank" alarm is generated

2. Press the [SEL] button once.

Operation setting screen when "Low level in tank" alarm is generated appears on the digital display.

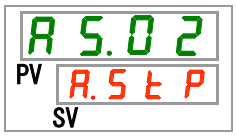

3. Set the product operation when "Low level in tank" alarm is generated with [▲] key or [▼] key, and press [SEL] key to enter.

Table 5.19-8 Product operation setting when “Low level in tank” alarm is generated

Set value	Explanation	Initial value (Default setting)
A.rUn	Operation continues when this alarm is generated.	✓
A.StP	Operation stops when this alarm is generated.	

Setting/Checking: Operation setting when "Circulating fluid discharge temp. rise" alarm is generated

4. Press the [SEL] key once.

Operation setting screen when "Circulating fluid discharge temp. rise" alarm is generated appears on the digital display.

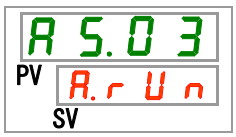

5. Set the product operation when "Circulating fluid discharge temp. rise" alarm is generated with [▲] key or [▼] key, and press [SEL] key to enter.

Table 5.19-9 Operation setting when “Circulating fluid discharge temp. rise” alarm is generated

Set value	Explanation	Initial value (Default setting)
oFF	This alarm is not detected.	

A.rUn	Operation continues when this alarm signal is generated.	✓
A.StP	Operation is stopped when this alarm signal is generated.	

Setting/Checking: Threshold temperature setting for "Detection temp. for the circulating fluid discharge temp. increase" alarm

6. Press the [SEL] key once.

Threshold detecting temperature setting screen for "Circulating fluid discharge temp. rise" alarm generation appears on the digital display.

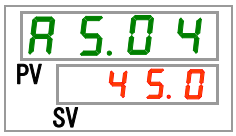

7. Set the threshold detection temperature for "Circulating fluid discharge temp. rise" alarm generation with [▲] key or [▼] key, and press [SEL] key to enter.

Table 5.19-10 Threshold detection temperature setting for "Circulating fluid discharge temp. rise" alarm generation

Set value	Explanation	Initial value (Default setting)
- - - -	Setting/checking of the alarm is impossible when the "Circulating fluid discharge temp. rise" alarm is set OFF.	
Centigrade 5.0 **to** 55.0	Sets threshold detecting temperature for “Circulating fluid discharge temp. rise” alarm. Setting temperature unit for Centigrade: 0.1 °C	55.0
Fahrenheit 41.0 **to** 131.0	Setting temperature unit for Fahrenheit: 0.1 °F	131.0

Setting/Checking: Operation setting when "Circulating fluid discharge temp. drop" alarm is generated

8. Press the [SEL] key once.

Operation setting screen when "Circulating fluid discharge temp. drop" alarm is generated appears on the digital display.

Set the product operation when "Circulating fluid discharge temp. drop" alarm is generated with [▲] key or [▼] key, and press [SEL] key to enter.

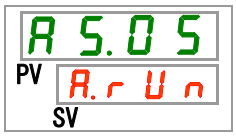

9. Set the product operation when "Circulating fluid discharge temp. drop" alarm is generated with [▲] key or [▼]key, and press [SEL] key to enter.

Table 5.19-11 Operation setting when “Circulating fluid discharge temp. drop” alarm is generated

Set value	Explanation	Initial value (Default setting)
oFF	This alarm is not detected.	
A.rUn	Operation continues when this alarm is generated.	✓
A.StP	Operation stops when this alarm is generated.	

Setting/Checking: Threshold detecting temperature setting for "Circulating fluid discharge temp. drop" alarm generation

10. Press the [SEL] key once.

Threshold detecting temperature setting screen for "Circulating fluid discharge temp. drop" alarm generation appears on the digital display.

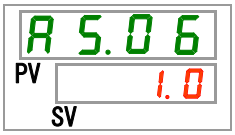

11. Set the threshold detecting temperature for "Circulating fluid discharge temp. drop" alarm generation with [▲] key or [▼] key, and press [SEL] key to enter.

Table 5.19-12 Threshold detecting temperature for "Circulating fluid discharge temp. drop" alarm

Set value	Explanation	Initial value (Default setting)
- - - -	Setting/checking of the alarm is impossible when the "Circulating fluid discharge temp. drop" alarm is set OFF.	
Centigrade 1.0 **to** 39.0	Sets threshold detecting temperature for "Circulating fluid discharge temp. drop" alarm Setting temperature unit for Centigrade: 0.1 °C	1.0
Fahrenheit 33.8 **to** 102.2	Setting temperature unit for Fahrenheit: 0.1 °F	33.8

Setting/Checking: Operation setting when "Circulating fluid discharge pressure rise" alarm is generated

12. Press the [SEL] key once.

Operation setting screen when "Circulating fluid discharge pressure rise" alarm is generated appears on the digital display.

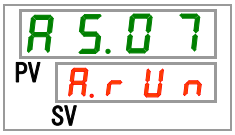

13. Set the product operation when "Circulating fluid discharge pressure rise" alarm is generated with [▲] key or [▼] key, and press [SEL] key to enter.

Table 5.19-13 Operation setting when “Circulating fluid discharge pressure rise” alarm is generated

Set value	Explanation	Initial value (Default setting)
oFF	This alarm is not detected.	
A.rUn	Operation continues when this alarm is generated.	✓
A.StP	Operation stops when this alarm is generated.	

Setting/Checking: Threshold pressure setting for "Circulating fluid discharge pressure rise" alarm

14. Press the [SEL] key once.

Threshold detecting pressure setting screen for "Circulating fluid discharge pressure rise" alarm generation appears on the digital display.

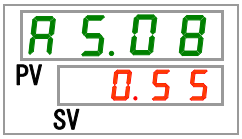

15. Set the threshold detection pressure for "Circulating fluid discharge pressure rise" alarm generation with [▲] key or [▼] key, and press [SEL] key to enter.

Table 5.19-14 Threshold detecting pressure setting for "Circulating fluid discharge pressure rise" alarm

Set value	Explanation	Initial value (Default setting)
- - - -	Setting/checking of the alarm is impossible when the "Circulating fluid discharge pressure rise" alarm is set OFF.	
MPa 0.05 **to** 0.60	Sets threshold detection pressure for ”Circulating fluid discharge pressure rise” alarm generation. Pressure setting unit for MPa: 0.01 MPa Pressure setting unit for PSI: 1 PSI	0.55
PSI 7 **to** 87		80

Setting/Checking: Operation setting when "Circulating fluid discharge pressure drop" alarm is generated

16. Press the [SEL] key once.

Operation setting screen when "Circulating fluid discharge pressure drop" alarm is generated appears on the digital display.

17. Set the product operation when "Circulating fluid discharge pressure drop" alarm is generated with [▲] key or [▼] key, and press [SEL] key to enter.

Table 5.19-15 Operation setting when "Circulating fluid discharge pressure drop" alarm is generated

Set value	Explanation	Initial value (Default setting)
oFF	This alarm is not detected.	
A.rUn	Operation continues when this alarm is generated.	
A.StP	Operation stops when this alarm is generated.	✓

Setting/Checking: Threshold pressure setting for "Circulating fluid discharge pressure drop" alarm

18. Press the [SEL] key once.

Threshold detecting pressure setting screen for "Circulating fluid discharge pressure drop" alarm generation appears on the digital display.

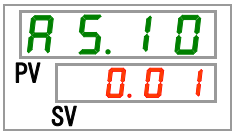

19. Set the threshold detection pressure for "Circulating fluid discharge pressure drop" alarm generation with [▲] key or [▼] key, and press [SEL] key to enter.

Table 5.19-16 Threshold detecting pressure setting for "Circulating fluid discharge pressure drop" alarm generation

Set value	Explanation	Initial value (Default setting)
----	Setting/checking are not available if the setting of the circulating fluid discharge pressure rise is OFF.	
MPa 0.05 **to** 0.60	Sets detection pressure for the circulating fluid discharge pressure drop. Pressure unit is MPa : Setting unit is 0.01MPa Pressure unit is PSI : Setting unit is 1PSI	0.05
PSI 7 **to** 87		7

Setting/Checking: Operation setting when "Communication error" alarm is generated

20. Press the [SEL] key once.

Operation setting screen when "Communication error" alarm is generated appears on the digital display.

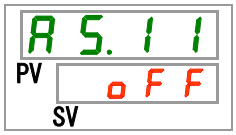

21. Set operation when "Communication error" alarm is generated with [▲] key or [▼] key, and press [SEL] key to enter.

Table 5.19-17 Operation setting when “Communication error” alarm is generated

Set value	Explanation	Initial value (Default setting)
oFF	This alarm is not detected.	✓
A.rUn	Operation continues when this alarm is generated.	
A.StP	Operation stops when this alarm is generated.	

Setting/Checking: Threshold monitoring time setting for "Communication error"

22. Press the [SEL] key once.

Monitoring time setting screen for "Communication error" alarm appears on the digital display.

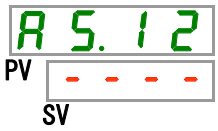

23. Set monitoring time for "Communication error" alarm with [▲] key or [▼] key, and press [SEL] key to enter.

Table 5.19-18 Monitoring time for "Communication error" alarm setting

Set value	Explanation	Initial value (Default setting)
----	Setting/checking of the alarm is impossible when the "AS11 Communication error" alarm is set OFF.	
30 to 600	Monitoring time for “Communication error” is set. Setting unit: 1 second	30

Setting/Checking: Operation setting when "Contact input 1 signal detection" alarm is generated

24. Press the [SEL] key once.

Operation setting screen when "Contact input 1 signal detection" alarm is generated appears on the digital display.

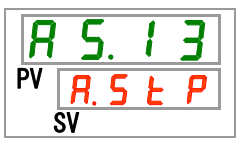

25. Set the product operation when "Contact input 1 signal detection" alarm is generated with [▲] key or [▼] key, and press [SEL] key to enter.

Table 5.19-19 Operation setting when "Contact input 1 signal detection" alarm is generated

Set value	Explanation	Initial value (Default setting)
oFF	This alarm is not detected.	
A.rUn	Operation continues when this alarm is generated.	
A.StP	Operation stops when this alarm is generated.	✓

Setting/Checking: Operation setting when "Contact input 2 signal detection" alarm is generated

26. Press the [SEL] key once.

Operation setting screen when "Contact input 2 signal detection" alarm is detected appears on the digital display.

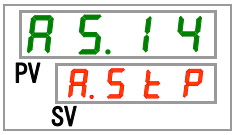

27. Set the product operation when "Contact input 2 signal detection" alarm is generated with [▲] key or [▼] key, and press [SEL] key to enter.

Table 5.19-20 Operation setting when "Contact input 2 signal detection" alarm is generated

Set value	Explanation	Initial value (Default setting)
oFF	This alarm is not detected.	
A.rUn	Operation continues when this alarm is generated.	
A.StP	Operation stops when this alarm is generated.	✓

Setting/Checking: Operation when "DC line fuse cut" alarm is generated

28. Press the [SEL] key once.

Operation setting screen when "DC line fuse cut" alarm is generated appears on the digital display.

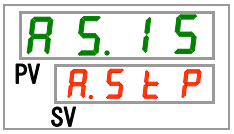

29. Set the product operation when "DC line fuse cut" alarm is generated with [▲] key or [▼] key, and press [SEL] key to enter.

Table 5.19-21 Operation setting when "DC line fuse cut" alarm is generated

Set value	Explanation	Initial value (Default setting)
A.rUn	Operation continues when this alarm is generated.	
A.StP	Operation stops when this alarm is generated.	✓

Setting/Checking: Temperature alarm monitoring method

30. Press the [SEL] key once.

Setting screen of the temperature alarm monitoring method appears on the digital display.

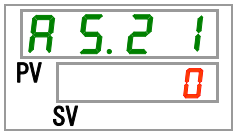

31. Set temperature alarm monitoring method with [▲] key or [▼] key, and press [SEL] key to enter.

Table 5.19-22 Setting of temperature alarm monitoring method

Set value	Item	Explanation	Initial value (Default setting)
0	Continuous monitoring	Alarm monitoring starts at the same time as the product is turned ON. When the ambient temperature is out of the range between the temperatures set for AS.04 and AS.06, AL.03 or AL.04 may be generated at the same time when the product is turned ON.	✓
1	Automatic monitoring	When the circulating fluid temperature is outside of the alarm threshold range at the time of operation start, the alarm will not be generated until the temperature comes inside the alarm threshold range.	
2	Monitoring start timer	Alarm will not be generated until it reaches the time set for the AS.22 "Monitoring start timer" after the operation starts. Alarm monitoring starts when the set time has passed.	
3	Automatic monitoring + Monitoring start timer	Alarm will not be generated until it reaches the time set for the AS.22 "Monitoring start timer" after the operation starts. Alarm monitoring starts when the set time has passed. When the circulating fluid temperature enters the alarm threshold range before it reaches the set time, the alarm monitoring will be started at that time.	

∗ Settings of this function and example of alarm generating timing for “5.19.3 Setting of temperature alarm monitoring method and alarm generation timing".

Setting/Checking: Monitoring start timer

32. Press the [SEL] key once.

Setting screen of the monitoring start timer is displayed on the digital display.

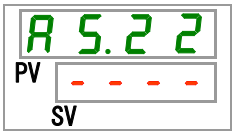

33. Set monitoring start timer with the [▲] key or the [▼] key, and press [SEL] key to enter.

Table 5.19-23 Setting of the monitoring start timer

Set value	Explanation	Initial value (Default setting)
- - - -	Setting and checking are impossible when "0: Continuous monitoring" or "1: Automatic monitoring" is selected for the setting of AS21 "Temperature alarm monitoring method".	
0 to 600	Sets the time when alarm monitoring starts. Setting unit is 1 minute.	0

∗ Settings of this function and example of alarm generating timing for “5.19.3 Setting of temperature alarm monitoring method and alarm generation timing".

Setting/Checking: Range over detection timer

34. Press the [SEL] key once.

Setting screen of the range over detection timer is displayed on the digital display.

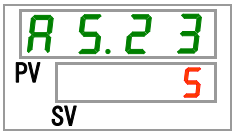

35. Set range over detection timer with the [▲] key or [▼] key, and press [SEL] key to enter.

Table 5.19-24 Setting of the range over detection timer

Set value	Explanation	Initial value (Default setting)
5 to 999	Sets time before the alarm is generated after the alarm is generated. Setting unit: 1 second	5

∗ Settings of this function and example of alarm generating timing for “5.19.3 Setting of temperature alarm monitoring method and alarm generation timing".

5.19.3 Setting of temperature alarm monitoring method and alarm generation timing

Examples of temperature alarm monitoring method setting and alarm generation timing are shown below.

■ **When "Automatic monitoring" is selected**

[1] Circulating fluid temperature when starting operation: Approximately 20 °C

[2] Circulating fluid set temperature: 15 °C

[3] "AS.21: Temperature alarm monitoring method": Select "Automatic monitoring".
("----" (invalid setting) will be shown for "AS.22: Monitoring start timer".)

[4] "AS.04: Detection temp. for the circulating fluid discharge temp. rise": Set to "16 °C".

[5] "AS.06: Detection temp. for the circulating fluid discharge temp. drop": Set to "14 °C".

[6] "AS.23: Range over detection timer ": Set to "600 sec".

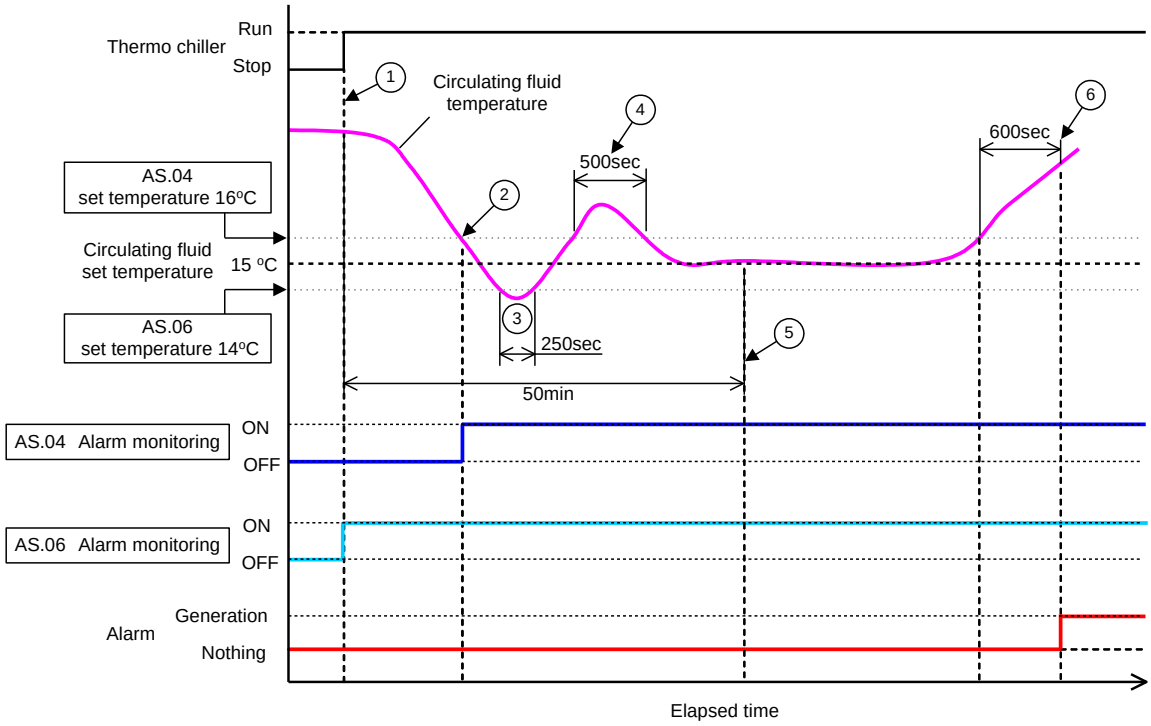

Fig 5-3 Alarm generation timing

■ -Alarm generation timing

Status (1): Temperature alarm monitoring starts by starting the chiller operation. As the circulating fluid temperature at this time is 20 °C, "AS.06" starts alarm monitoring at the same time as the operation start.

Status (2): The circulating fluid temperature becomes within the set range of "AS.04", and starts "AS.04" alarm monitoring.

Status (3): The circulating fluid temperature exceeds the threshold of "AS.06", but the alarm will not be generated as it has returned within the 600 second range of the "AS.23: Range over detecting timer".

Status (4): The circulating fluid temperature exceeds the threshold of "AS.04", but the alarm will not be generated as it has returned within the 600 second range of the "AS.23: Range over detecting timer".

Status (5): Alarm "AL03: Circulating fluid discharge temp. rise" will be generated after 600 seconds that is set for the "AS.23: Range over detection timer" after the circulating fluid temperature exceeds the threshold of "AS.04".

■ **When "<u>Automatic monitoring + Monitoring start timer</u>" is selected**

[1] Circulating fluid temperature when starting operation: Approximately 20 °C

[2] Circulating fluid set temperature: 15 °C

[3] "AS.21: Temperature alarm monitoring method": Select "Automatic monitoring + Monitoring start timer".

[4] "AS.22: Monitoring start timer": Set it to "50 min".

[5] "AS.04: Detection temp. for the circulating fluid discharge temp. rise": Set to "16 °C".

[6] "AS.06: Detection temp. for the circulating fluid discharge temp. drop": Set to "14 °C".

[7] "AS.23: Range over detection timer": Set to "600 sec".

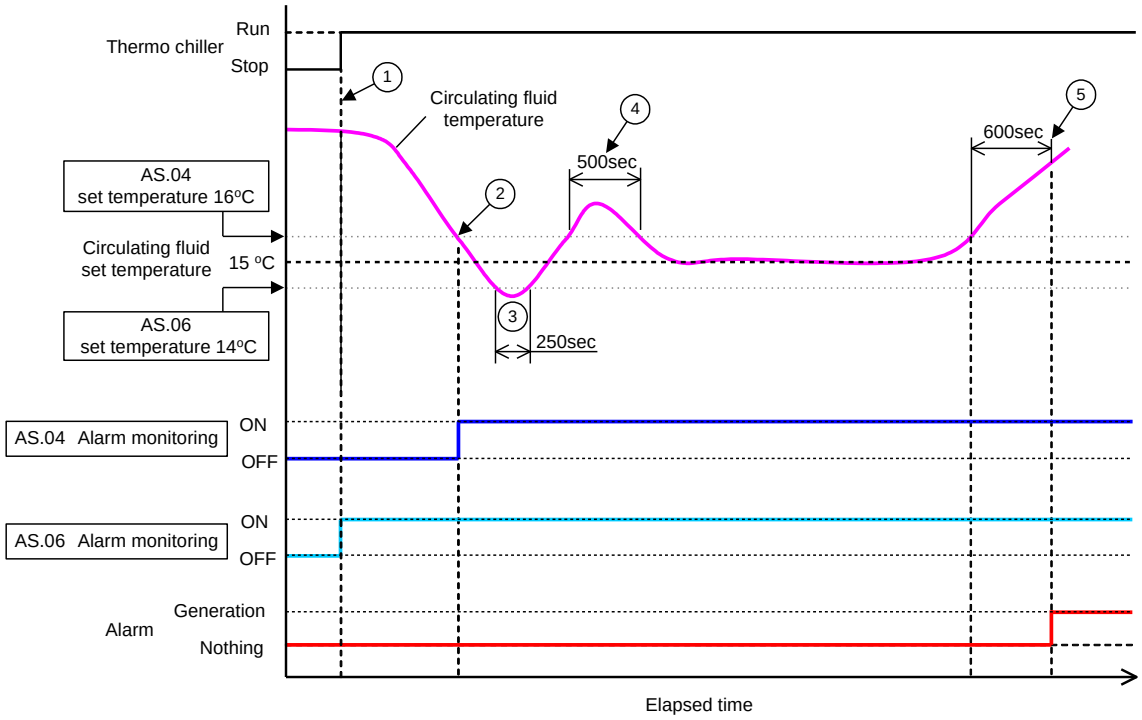

Fig 5-4 Alarm generation timing

■ -Alarm generation timing

Status (1): Start operation of the chiller. As the circulating fluid temperature is within the set range of "AS.06", "AS.06" alarm monitoring starts.

Status (2): The circulating fluid temperature becomes within the set range of "AS.04". "AS.04" alarm monitoring starts.

Status (3): The circulating fluid temperature exceeds the threshold of "AS.06", but the alarm will not be generated as it has returned within the 600 sec range of the "AS.23: Range over detecting timer".

Status (4): The circulating fluid temperature exceeds the threshold of "AS.04", but the alarm will not be generated as it has returned within the 600 sec range of the "AS.23: Range over detecting timer".

Status (5): 50 minutes passes after starting operation. Alarm monitoring has started. It shows that the "50 min" setting does not influence the alarm monitoring under these conditions.

Status (6): Alarm will be generated after 600 seconds that is set for "AS.23: Range over detection timer" after the circulating fluid temperature exceeds the threshold of "AS.04".

Setting/Checking: Operation when compressor related alarms are generated

36. Press the [SEL] key once.

Setting screen of the product operation when compressor related alarms are generated appears on the digital display.

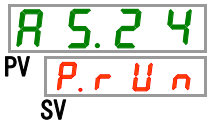

37. Set the product operation when the compressor related errors are generated with the [▲] key or [▼] key. Refer to "Table 5.19-26 Operation setting of compressor and pump when the pump related alarms are generated", and press [SEL] key to enter.

Batch setting of the operation of compressor and pump is executed for all the alarms shown in "Table 5.19-25 Compressor related alarms".

Table 5.19-25 Compressor related alarms

Code	Alarm name
AL10	High compressor suction temp.
AL11	Low compressor suction temp.
AL12	Low super heat temperature
AL13	High compressor discharge pressure
AL15	Refrigerant circuit pressure (high pressure side) drop
AL16	Refrigerant circuit pressure (low pressure side) rise
AL17	Refrigerant circuit pressure (low pressure side) drop
AL18	Compressor running failure
AL24	Compressor suction temp. sensor failure
AL26	Compressor fluid discharge pressure sensor failure
AL27	Compressor suction pressure sensor failure
AL37	Compressor discharge temp. sensor failure
AL38	Compressor discharge temp. rise
AL43 *1	Fan failure
AL45	Compressor over current

*1: This alarm does not occur on the product of water cooled type.

Table 5.19-26 Operation setting of compressor and pump when the pump related alarms are generated

Set value	Explanation	Initial value (Default setting)
P.r U n	Operation of only the compressor stops when these alarms are generated.	✓
A.S t P	Operation of both the compressor and pump stops when these alarms are generated.	

Setting/Checking: Operation setting when "Circulating fluid discharge pressure sensor error" alarm is generated

38. Press the [SEL] key once.

Operation setting screen when "Circulating fluid discharge pressure sensor failure" alarm is generated appears on the digital display.

39. Set the product operation when "Circulating fluid discharge pressure sensor failure" alarm is generated with [▲] key or [▼] key, and press [SEL] key to enter.

Table 5.19-27 Operation setting when the "Circulating fluid discharge pressure sensor failure" alarm is generated

Set value	Explanation	Initial value (Default setting)
oFF	This alarm signal is not detected. While this setting is ON, [ALARM] light on the operation panel keeps blinking with the light ON for 0.5 seconds and OFF for 3 seconds.	
A.rUn	Operation continues when this alarm is generated.	
A.StP	Operation stops when this alarm is generated.	✓

Setting/Checking: Operation setting when "Pump maintenance" alarm is generated

40. Press the [SEL] key once.

Operation setting screen when "Pump maintenance" alarm is generated appears on the digital display.

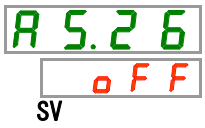

41. Set the product operation when "Pump maintenance" alarm is generated with [▲] key or [▼] key, and press [SEL]key to enter.

Table 5.19-28 Operation setting when "Pump maintenance" alarm is generated

Set value	Explanation	Initial value (Default setting)
oFF	This alarm is not detected.	✓
A.rUn	Operation continues when this alarm is generated.	

Setting/Checking: Operation setting when "Fan maintenance" alarm is generated

42. Press the [SEL] key once.

Operation setting screen when "Fan maintenance" alarm is generated appears on the digital display.

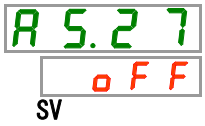

43. Set the product operation when "Fan maintenance" alarm is generated with [▲] key or [▼] key, and press [SEL] key to enter.

Table 5.19-29 Operation setting when "Fan maintenance" alarm is generated

Set value	Explanation	Initial value (Default setting)
oFF	This alarm signal is not detected.	✓
A.run	Operation continues when this alarm signal is generated.	

Setting/Checking: Operation setting when "Compressor maintenance" alarm is generated

44. Press the [SEL] key once.

Operation setting screen when "Compressor maintenance" alarm is generated appears on the digital display.

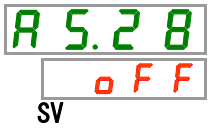

45. Set the product operation when "Compressor maintenance" alarm is generated with [▲] key or [▼]key, and press [SEL] key to enter.

Table 5.19-30 Operation setting when “Compressor maintenance” alarm is generated

Set value	Explanation	Initial value (Default setting)
oFF	This alarm is not detected.	✓
A.run	Operation continues when this alarm is generated.	

Setting/Checking: Operation setting when "Dust-proof filter maintenance" alarm is generated

46. Press the [SEL] key once.

Operation setting screen when "Dust-proof filter maintenance" alarm is generated appears on the digital display.

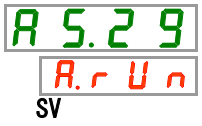

47. Set the product operation when "Dust-proof filter maintenance" alarm is generated with [▲] key or [▼] key, and press [SEL] key to enter.

Table 5.19-31 Operation setting when "Dust-proof filter maintenance" alarm is generated

Set value	Explanation	Initial value (Default setting)
oFF	This alarm is not detected.	✓
A.rUn	Operation continues when this alarm is generated.	

Setting/Checking: Operation setting when "Power stoppage" alarm is generated

48. Press the [SEL] key once.

Operation setting screen when "Power stoppage" alarm is generated appears on the digital display.

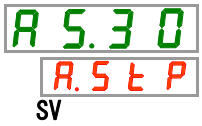

49. Set the product operation when "Power stoppage" alarm is generated with [▲] key or [▼] key, and press [SEL] key to enter..

Table 5.19-32 Operation setting when "Power stoppage" alarm is generated

Set value	Explanation	Initial value (Default setting)
oFF	This alarm is not detected.	✓
A.StP	Operation continues when this alarm is generated.	

Setting/Checking: Monitoring time for maintenance of dustproof filter

50. Press the [SEL] key once.

Setting screen of the monitoring time before "Dust-proof filter maintenance" alarm is generated is displayed on the digital display.

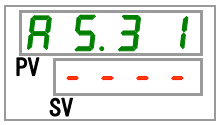

51. Set the monitoring time before the "Dust-proof filter maintenance" alarm is generated with [▲] key or [▼] key, and press [SEL] key to enter.

Table 5.19-33 Monitoring time setting before "Dust-proof filter maintenance" alarm is generated

Set value	Explanation	Default
- - - -	When the AS29 "Dust-filter maintenance" alarm is set OFF, setting and checking of the monitoring time are impossible.	
1 **to** 9999	Sets time before the alarm is generated. Setting unit: 1 hour	500

5.20 Communication function

5.20.1 Communication function

Contact input/output and serial communication can be performed.
Refer to the Operation Manual Communication Function for more details

5.20.2 Setting/checking of communication function

The table below shows the set items of the communication function and default settings.

Table 5.20-1 Set items of communication function

Display	Item			Contents	Default setting
Co.01	Communication mode			Sets communication mode.	LOC
Co.02	Serial communication	Serial protocol		Sets serial communication protocol.	MDBS
Co.03		Communication specification		Sets standard of the serial communication.	485
Co.04		RS-485 terminal		Sets of the terminal of RS-485.	OFF
Co.05		Mod bus	Slave address	Sets slave address.	1 (----)∗1
Co.06			Communication speed	Sets communication speed.	19.2 (----)∗1
Co.07		Simple communication protocol	Slave address	Sets slave address.	---- (1)∗1
Co.08			Communication speed	Sets communication speed.	---- (9.6)∗1
Co.09			BCC	Sets error detection code.	---- (ON)∗1
Co.10			Data length	Sets data length.	---- (8BIT)∗1
Co.11			Parity check	Sets parity check.	---- (NON)∗1
Co.12			Stop bit length	Sets stop bit length	---- (2BIT)∗1
Co.13			Response delay time	Sets time to delay the response message.	---- (0)∗1
Co.14			Communication range	Sets communication range.	---- (RW)∗1
Co.15	Contact input/output communication	Contact input signal 1		Sets contact input signal 1.	RUN
Co.16		Contact input signal 1 type		Sets input type of contact input signal 1.	ALT
Co.17		Contact input signal 1 Delay timer (time delay) of reading		Sets the delay timer of reading of contact input signal 1.	---- (0)∗2
Co.18		Contact input signal 1 OFF detection timer		Sets the contact input signal 1 OFF detection timer	---- (0)∗2
Co.19		Contact input signal 2		Sets contact input signal 2.	OFF
Co.20		Contact input signal 2 type		Sets input type of contact input signal 2.	ALT
Co.21		Contact input signal 2 Delay timer (time delay) of reading		Sets the delay timer of reading of contact input signal 2.	---- (0)∗3
Co.22		Contact input signal 2 OFF detection timer		Sets the contact input signal 2 OFF detection timer	---- (0)∗3
Co.23		Contact output signal 1 function		Sets contact output signal 1.	RUN
Co.24		Contact output signal 1 operation		Sets input type of contact output signal 1.	A
Co.25		Contact output signal 1 selected alarm		Sets alarm which is selected for contact output 1.	---- (AL.01) ∗4
Co.26		Contact output signal 2 function		Sets output signal function of contact output 2.	RMT
Co.27		Contact output signal 2 operation		Sets output signal operation of contact output 2.	A
Co.28		Contact output signal 2 selected alarm		Sets alarm which is selected for contact output 2.	---- (AL.01) ∗5
Co.29		Contact output signal 3 function		Sets output signal function of contact output 3.	ALM
Co.30		Contact output signal 3 operation		Sets output signal operation of contact output 3.	B
Co.31		Contact output signal 3 selected alarm		Sets alarm which is selected for contact output 3.	---- (AL.01) ∗6

∗1: The default setting when CO02 is PRO1 or PRO2.
∗2: The default setting when CO15 is SW-A or SW-B.
∗3: The default setting when CO19 is SW-A or SW-B.
∗4: The default setting when CO23 is A.SEL.
∗5: The default setting when CO26 is A.SEL.
∗6: The default setting when CO29 is A.SEL.

Setting/Checking: Communication mode

1. Press and hold the [MENU] key for approximately 2 seconds.

Repeat pressing the button until the communication mode setting screen [C o. 0 1] appears on the digital display.

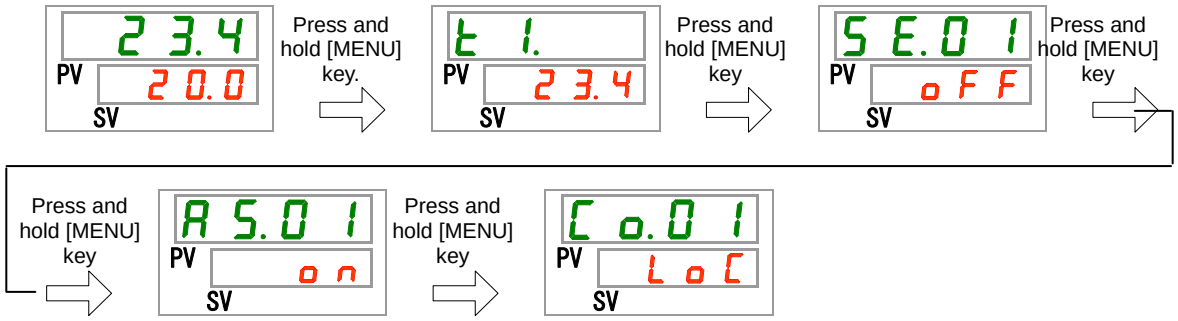

2. Select a communication mode with [▲] key or [▼] key, and press [SEL] key to enter.

Table 5.20-2 Setting of communication mode

Set value	Explanation	Initial value (Default setting)
L o C	Sets LOCAL mode. (Operation and setting can be performed on the operation panel.)	✓
d I o	Sets DIO mode.*1 (The product is operated with contact input/output.)	
S E r	Sets SERIAL mode.*2 (Operation and setting are performed by serial communication.)	

∗1: When the contact input signal 1 is “external switch signal”, it is not possible to set to “DIO mode”.

∗2: When the serial protocol is “simple communication protocol 2” and the contact input 1 is “external switch signal” or contact input 2 is “remote signal”, it is not possible to set to “SERIAL mode”.

Setting/Checking: Serial communication protocol

3. Press the [SEL] key once.

Setting screen of serial communication protocol appears on the digital display.

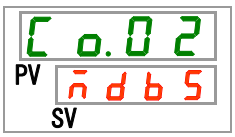

4. Select a serial communication protocol with [▲] key or [▼] key, and press [SEL] key to enter.

Table 5.20-3 Setting of serial communication protocol

Set value	Explanation	Initial value (Default setting)
mdbS	MODBUS protocol	✓
Pro1	Simple communication protocol 1	
Pro2	Simple communication protocol 2*3	

*3: When the contact input signal 2 is set to “remote signal”, it is not possible to set to “simple communication protocol 2”.

Setting/Checking: Communication specification

5. Press the [SEL] key once.

Setting screen of the communication specification is displayed on the digital display.

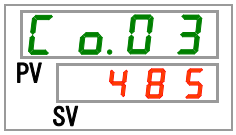

6. Select communication specification with [▲] key or [▼] key, and press [SEL] key to enter.

Table 5.20-4 Setting of communication specification

Set value	Explanation	Initial value (Default setting)
232C	RS-232C standard	
485	RS-485 standard	✓

Setting/Checking: Terminal for RS-485

7. Press the [SEL] key once.

Setting screen of terminal for RS-485is displayed on the digital display.

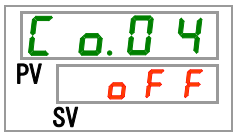

8. Perform a setting of terminal for RS-485 with [▲] key or [▼] key, and press [SEL] key to enter.

Table 5.20-5 Setting of terminal for RS-485

Set value	Explanation	Initial value (Default setting)
oFF	No terminal	✓
on	Terminal is set.	

Setting/Checking: Slave addresses (MODBUS)

9. Press the [SEL] key once.

Setting screen of slave addresses (MODBUS) is displayed on the digital display.

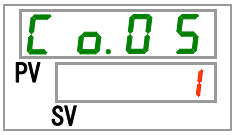

10. Set slave addresses (MODBUS) with [▲] key or [▼] key, and press [SEL] key to enter.

Table 5.20-6 Slave address settings

Set value	Explanation	Initial value (Default setting)
----	Setting/checking is possible only when the serial protocol is MODBUS.	
1 to 99	Slave address setting for MODBUS Setting range: 1 to 99	1

Setting/Checking: Communication speed (MODBUS)

11. Press the [SEL] key once.

Setting screen of the communication speed (MODBUS) is displayed on the digital display.

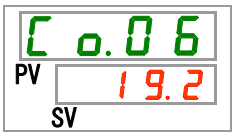

12. Set communication speed (MODBUS) with [▲] key or [▼] key, and press [SEL] key to enter.

Table 5.20-7 Communication speed setting

Set value	Explanation	Initial value (Default setting)
----	Setting and checking is possible only when the serial protocol setting is MODBUS.	
9.6	9600bps	
19.2	19200bps	✓

Setting/Checking: Settings of slave addresses (simple communication protocol)

13. Press the [SEL] key once.

Setting screen of slave addresses (simple communication protocol) is displayed on the digital display.

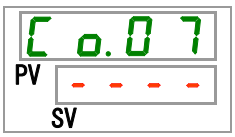

14. S Set slave addresses (simple communication protocol) with [▲] key or [▼] key, and press [SEL] key to enter.

Table 5.20-8 Setting of slave addresses

Set value	Explanation	Initial value (Default setting)
- - - -	Setting/checking is possible only when the serial protocol setting is simple communication protocol.	
1 to 99	Setting of slave addresses for simple communication protocol Setting range: 1 to 99	1

Setting/Checking: Communication speed (simple communication protocol)

15. Press the [SEL] key once.

Setting screen of communication speed (simple communication protocol) is displayed on the digital display.

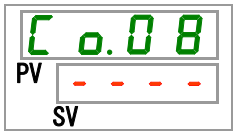

16. Set communication speed (serial communication protocol) with [▲] key or [▼] key, and press [SEL] key to enter.

Table 5.20-9 Communication speed setting

Set value	Explanation	Initial value (Default setting)
- - - -	Setting/checking is possible only when the serial protocol setting is simple communication protocol.	
1.2	1200bps	
2.4	2400bps	
4.8	4800bps	
9.6	9600bps	✓
19.2	19200bps	

Setting/Checking: BCC (simple communication protocol)

17. Press the [SEL] key once.

Setting screen of BCC (simple communication protocol) is displayed on the digital display.

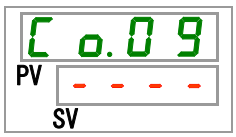

18. Set BCC (simple communication protocol) with [▲] key or [▼] key, and press [SEL] key to enter.

Table 5.20-10 BCC setting

Set value	Explanation	Initial value (Default setting)
- - - -	Setting/checking is possible only when the serial protocol setting is simple communication protocol.	
oFF	Without BCC	
on	With BCC	✓

Setting/Checking: Data length (simple communication protocol)

19. Press the [SEL] key once.

Setting screen of data length (simple communication protocol) is displayed on the digital display.

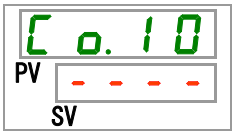

20. Set data length (simple communication protocol) with [▲] key or [▼] key, and press [SEL] key to enter.

Table 5.20-11 Data length setting

Set value	Explanation	Initial value (Default setting)
- - - -	Setting/checking is possible only when the serial protocol setting is simple communication protocol.	
7bit	7 bit	
8bit	8 bit	✓

Setting/Checking: Parity check (simple communication protocol)

21. Press the [SEL] key once.

Setting screen of parity check (simple communication protocol) is displayed on the digital display.

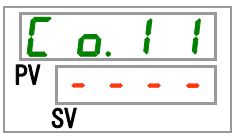

22. Perform setting for parity check (simple communication protocol) with [▲] key or [▼] key, and press [SEL] key to enter.

Table 5.20-12 Parity check setting

Set value	Explanation	Initial value (Default setting)
- - - -	Setting/checking is possible only when the serial protocol setting is simple communication protocol.	
non	No parity check	✓
odd	Parity check with odd number	
EuEn	Parity check with even number	

Setting/Checking: Stop bit (simple communication protocol)

23. Press the [SEL] key once.

Setting screen of stop bit (simple communication protocol) is displayed on the digital display.

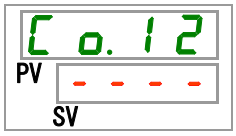

24. Set stop bit (simple communication protocol) with [▲] key or [▼] key, and press [SEL] key to enter.

Table 5.20-13 Stop bit setting

Set value	Explanation	Initial value (Default setting)
- - - -	Setting/checking are not available unless the serial protocol setting is simple communication protocol.	
1bit	1 bit	
2bit	2 bit	✓

Setting/Checking: Response delay time (simple communication protocol)

25. Press the [SEL] key once.

Setting screen of response delay time (simple communication protocol) is displayed on the digital display.

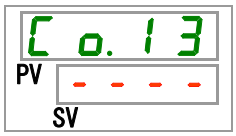

26. Set responce delay time (simple communication protocol) with [▲] key or [▼] key, and press [SEL] key to enter.

Table 5.20-14 Setting of response delay time

Set value	Explanation	Initial value (Default setting)
- - - -	Setting/checking is possible only when the serial protocol setting is simple communication protocol.	
0 to 250	Setting of response delay time Setting range: 0 to 250 ms	0

Setting/Checking: Communication range (simple communication protocol)

27. Press the [SEL] key once.

T Setting screen of communication range (simple communication protocol) is displayed on the digital display.

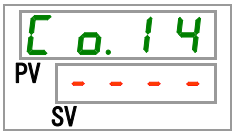

28. Set communication range (simple communication protocol) with [▲] key or [▼] key, and press [SEL] key to enter.

Table 5.20-15 Setting of communication range

Set value	Explanation	Initial value (Default setting)
- - - -	Setting/checking is possible only when the serial protocol setting is simple communication protocol.	
ro	Only reading is available	
rW	Reading and writing are available	✓

Setting/Checking: Contact input signal 1

29. Press the [SEL] key once.

Setting screen of contact input signal 1 is displayed on the digital display.

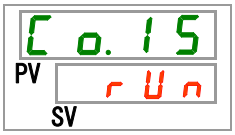

30. Perform setting for the contact input signal 1 with [▲] key or [▼] key, and press [SEL] key to enter.

Table 5.20-16 Setting for contact input signal 1

Set value	Explanation	Initial value (Default setting)
oFF	No signal input	
rUn	Run/Stop signal input	✓
SW_A	External switch signal input (N.O. type)*1,*2	
SW_b	External switch signal input (N.C. type) *1,*2	

*1: When the setting of the communication mode is “DIO mode”, “External switch signal” cannot be set.

*2: When the setting of the communication mode is “SEIRAL mode” and the protocol setting is “Simplified communication protocol 2”, “External switch signal” cannot be set.

Setting/Checking: Contact input signal 1 type

31. Press the [SEL] key once.

Setting screen of contact input signal 1 type is displayed on the digital display.

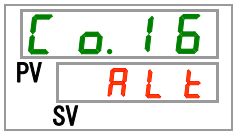

32. Select the contact input signal 1 type with [▲] key or [▼] key, and press [SEL] key to enter.

Table 5.20-17 Setting of contact input signal 1 type

Set value	Explanation	Initial value (Default setting)
----	Setting/checking is not available when contact input signal 1 setting is OFF.	
ALt	Alternate signal	✓
nt	Momentary signal*1	

*1: This can be set only when the contact input signal 1 is set to "Run/Stop signal input".

Setting/Checking: Contact input signal 1 delay timer for reading

33. Press the [SEL] key once.

Setting screen of contact input signal 1 delay timer is displayed on the digital display.

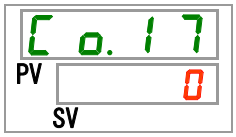

34. Set time delay for the contact input signal 1 delay timer for reading with [▲] key or [▼] key, and press [SEL] key to enter.

Table 5.20-18 Setting of time delay for contact input signal delay timer for reading

Set value	Explanation	Initial value (Default setting)
- - - -	Setting/checking is possible only when the contact input signal 1 is set to external switch signal input (N.O. type or N.C. type).	
0 to 300	Setting of the contact input signal 1 delay timer of reading Setting range: 0 to 300 seconds	0

Setting/Checking: Contact input signal 1 OFF detection timer

35. Press the [SEL] key once.

Setting screen of contact input signal 1 OFF detection timer is displayed on the digital display.

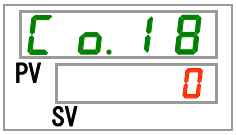

36. Set threshold time for the contact input signal 1 OFF detection timer with [▲] key or [▼] key, and press [SEL] key to enter.

Table 5.20-19 Threshold time setting for contact input signal 1 OFF detection timer

Set value	Explanation	Initial value (Default setting)
- - - -	Setting/checking is possible only when the contact input signal 1 is set to external switch signal input (N.O. type or N.C. type).	
0 to 10	Setting of the contact input signal 1 OFF detection timer Setting range: 0 to 10 seconds	0

Setting/Checking: Contact input signal 2

37. Press the [SEL] key once.

Setting screen of contact input signal 2 is displayed on the digital display.

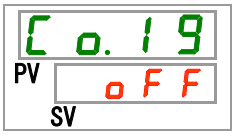

38. Perform setting of the contact input signal 2 with [▲] key or [▼] key, and press [SEL] key to enter.

Table 5.20-20 Setting of the contact input signal 2

Set value	Explanation	Initial value (Default setting)
oFF	No signal input	✓
rUn	Run/stop signal input	
SW-A	External switch signal input (N.O. type)	
SW-b	External switch signal input (N.C. type)	
rmt	Remote signal input*1	

*1: When the serial communication protocol is set to “Simplified communication protocol 2”, it is not possible to set to “Remote signal”.

Setting/Checking: Contact input signal 2 type

39. Press the [SEL] key once.

Setting screen of contact input signal 2 type is displayed on the digital display.

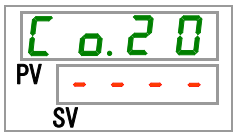

40. Select contact input signal 2 type with [▲] key or [▼] key, and press [SEL] key to enter.

Table 5.20-21 Setting of the contact input signal 2 type

Set value	Explanation	Initial value (Default setting)
----	Setting/checking are not available when contact input signal 2 setting is OFF.	
ALt	Alternate signal	✓
mt	Momentary signal*1	

*1: This can be set only when the contact input signal 2 is set to "Run/Stop signal input" or "Remote signal".

Setting/Checking: Contact input signal 2 delay timer of reading

41. Press the [SEL] key once.

Setting screen of contact input signal 2 delay timer is displayed on the digital display.

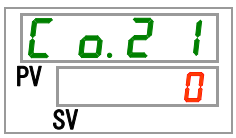

42. Set time delay for the contact input signal 2 delay timer for reading with [▲] key or [▼] key, and press [SEL] key to enter.

Table 5.20-22 Setting of time delay for the contact input signal 2 delay timer for reading

Set value	Explanation	Initial value (Default setting)
- - - -	Setting/checking is possible only when the contact input signal 2 is set to external switch signal input (N.O. or N.C.).	
0 to 300	Setting of the contact input signal 2 delay timer for reading Setting range: 0 to 300 seconds	0

Setting/Checking: Contact input signal 2 OFF detection timer

43. Press the [SEL] key once.

Setting screen of contact input signal 2 OFF detection timer is displayed on the digital display.

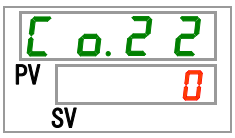

44. Set threshold time for the contact input signal 2 OFF detection timer with [▲] key or [▼] key, and press [SEL] key to enter.

Table 5.20-23 Time setting for contact input signal 2 OFF detection timer

Set value	Explanation	Initial value (Default setting)
- - - -	Setting/checking is possible only when the contact input signal 2 is set to external switch signal input (N.O. or N.C.).	
0 to 10	Setting of the contact input signal 2 OFF detection timer Setting range: 0 to 10 seconds	0

Setting/Checking: Contact output signal 1 function

45. Press the [SEL] key once.

Setting screen of contact output signal 1 function is displayed on the digital display.

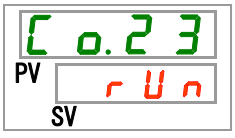

46. Select a function with [▲] key or [▼] key, and press [SEL] key to enter.

Table 5.20-24 Setting for the contact output signal 1

Set value	Explanation	Initial value (Default setting)
oFF	No signal output	
rUn	Operation status signal output	✓
rmt	Remote status signal output	
rdy	Ready completion (TEMP READY) signal output	
A.StP	Operation stop alarm signal output	
A.rUn	Operation continuation alarm signal output	
ALm	Alarm status signal output	
A.SEL	Selected alarm status signal output	
on.tm	Operation start timer setting status signal output	
oF.tm	Operation stop timer setting status signal output	
P.rSt	Operation restoration from power failure setting status signal output	
F.P.	Anti-freezing setting status signal output	
InP1	Pass through signal output of the contact input signal 1	
InP2	Pass through signal output of the contact input signal 2	
HArm	Warming up function setting status signal output	
SnoW	Anti-snow coverage function setting status signal output	

Setting/Checking: Operation of the contact output signal 1

47. Press the [SEL] key once.

Setting screen of the contact output signal 1 operation is displayed on the digital display.

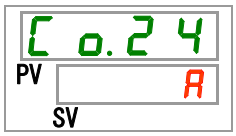

48. Select operation of the contact output signal 1 with [▲] key or [▼] key, and press [SEL] key to enter.

Table 5.20-25 Setting of operation of the contact output signal 1

Set value	Explanation	Initial value (Default setting)
A	N.O. type	✓
b	N.C. type	

Setting/Checking: Selected alarm for contact output signal 1

49. Press the [SEL] key once.

Setting screen of selected alarm of the contact output signal 1 is displayed on the digital display.

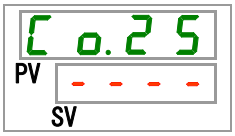

50. Set the alarm selected for the contact output signal 1 with [▲] key or [▼] key, and press [SEL] key to enter.

Table 5.20-26 Setting of the alarm selected for the contact output signal 1

Set value	Explanation	Initial value (Default setting)
----	Setting/checking is possible only when the contact output signal 1 is set to the selected alarm status signal output.	
AL.01 to AL.51	Setting of the selected alarm Setting range: AL.01 to AL.51	AL.01

Setting/Checking: Contact output signal 2 function

51. Press the [SEL] key once.

Setting screen of the contact output signal 2 function is displayed on the digital display.

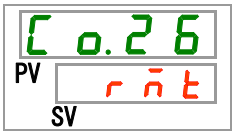

52. Select a function with [▲] key or [▼] key, and press [SEL] key to enter.

Table 5.20-27 Setting for the contact output signal 2

Set value	Explanation	Initial value (Default setting)
oFF	No signal output	
rUn	Operation status signal output	
rmt	Remote status signal output	✓
rdy	Ready completion (TEMP READY) signal output	
A.StP	Operation stop alarm signal output	
A.rUn	Operation continuation alarm signal output	
ALm	Alarm status signal output	
A.SEL	Selected alarm status signal output	
on.tm	Operation start timer setting status signal output	
oF.tm	Operation stop timer setting status signal output	
P.rSt	Operation restoration from power failure setting status signal output	
F.P.	Anti-freezing setting status signal output	
InP1	Pass through signal output of the contact input signal 1	
InP2	Pass through signal output of the contact input signal 2	
HArm	Warming up function setting status signal output	
SnoW	Anti-snow coverage function setting status output	

Setting/Checking: Contact output signal 2 operation

53. Press the [SEL] key once.

Setting screen of the contact output signal 2 operation is displayed on the digital display.

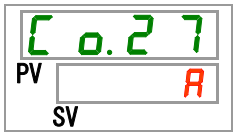

54. Set the operation type of the contact output signal 2 with [▲] key or [▼] key, and press [SEL] key to enter.

Table 5.20-28 Operation type setting for the contact output signal 2

Set value	Explanation	Initial value (Default setting)
A	N.O. type	✓
b	N.C. type	

Setting/Checking: Selected alarm for contact output signal 2

55. Press the [SEL] key once.

Setting screen of selected alarm of the contact output signal 2 is displayed on the digital display.

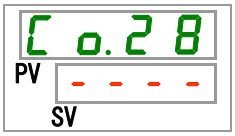

56. Set the alarm selected for the contact output signal 2 with [▲] key or [▼] key, and press [SEL] key to enter.

Table 5.20-29 Setting of the alarm selected for the contact output signal 2

Set value	Explanation	Initial value (Default setting)
----	Setting/checking is possible only when the contact output signal 2 is set to the selected alarm status signal output.	
AL.01 to AL.51	Setting of the selected alarm Setting range: AL.01 to AL.51	AL.01

Setting/Checking: Contact output signal 3 function

57. Press the [SEL] key once.

Setting screen of the contact output signal 3 function is displayed on the digital display.

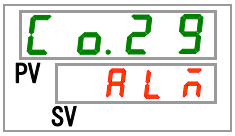

58. Select a function for the contact output signal 3 with [▲] key or [▼] key, and press [SEL] key to enter.

Table 5.20-30 Function setting for the contact output signal 3

Set value	Explanation	Initial value (Default setting)
oFF	No signal output	
rUn	Operation status signal output	
rnt	Remote status signal output	
rdy	Ready completion (TEMP READY) signal output	
A.StP	Operation stop alarm signal output	
A.rUn	Operation continuation alarm signal output	
ALn	Alarm status signal output	✓
A.SEL	Selected alarm status signal output	
on.tn	Operation start timer setting status signal output	
oF.tn	Operation stop timer setting status signal output	
P.rSt	Operation restoration from power failure setting status signal output	
F.P.	Anti-freezing setting status signal output	
InP1	Pass through signal output of the contact input signal 1	
InP2	Pass through signal output of the contact input signal 2	
HArn	Warming up function setting status signal output	
SnoW	Anti-snow coverage function setting status signal output	

Setting/Checking: Operation of the contact output signal 3

59. Press the [SEL] key once.

Setting screen of the contact output signal 3 operation is displayed on the digital display.

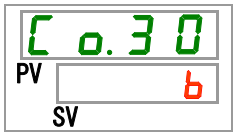

60. Set the operation type of the contact output signal 3 with [▲] key or [▼] key, and press [SEL] key to enter.

Table 5.20-31 Operation setting for the contact output signal 3

Set value	Explanation	Initial value (Default setting)
A	N.O. type	
b	N.C. type	✓

Setting/Checking: Selected alarm for contact output signal 3

61. Press the [SEL] key once.

Setting screen of the selected alarm of the contact output signal 3 is displayed on the digital display.

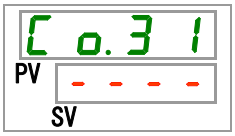

62. Set the alarm selected for the contact output signal 3 with [▲] key or [▼]key, and press [SEL] key to enter.

Table 5.20-32 Setting of an alarm selected for the contact output signal 3

Set value	Explanation	Initial value (Default setting)
----	Setting/checking is possible only when the contact output signal 3 is set to the selected alarm status signal output.	
AL.01 to AL.51	Setting of the selected alarm Setting range: AL.01 to AL.51	AL.01

63. Press the [MENU] key once.

Returns to the main display (which shows the circulating fluid temperature).

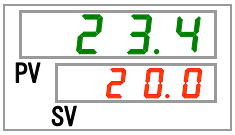

Chapter 6 Option

6.1 Option M [DI water (Pure water) piping]

6.1.1 Option M [DI water (Pure water) piping]

This option is for customers who use DI water (pure water) as circulating fluid.

Circulating fluid wetted materials	Stainless (Include heat exchanger brazing), SiC, Carbon, PTFE, PP, PE, POM, FKM, EPDM, PVC (No. copper used)

- Servieable conductivity: 0.22μS/cm or more. (Resistivity: 4.5MΩ· cm or less.)

6.2 Option J [Automatic fluid filling]

6.2.1 Option J [Automatic fluid filling]

This function is available for customers who selected automatic fluid filling.

Refer “3.6 Option J Piping of【Automatic fluid filling】” for the installation of the automatic fluid filling.

Piping to the automatic fluid filling port enables easy supply of the circulating fluid through the level switch in the tank.

Starts supplying the circulating fluid automatically when the circulating fluid amount in the tank is small.

Stops supplying the circulating fluid automatically when the circulating fluid is filled in the tank.

Automatic fluid filling does not start when alarm of table 5-19-1 is generated. Fluid filling stops if the filling is automatic.

Table 6.2-1 Table of alarms automatic fluid filling stops / does not start

Code	Description
AL02	High circulating fluid discharge temp.
AL05	High circulating fluid return temp.
AL06	High circulating fluid discharge pressure
AL07	Abnormal pump operation
AL20	Memory error
AL22	Circulating fluid discharge temp. sensor failure
AL23	Circulating fluid return temp. sensor failure
AL41	Power stoppage

CAUTION

- **This function starts both in stand-by condition (power supply switch is ON) and in operation.**
- **The freezing of the automatic fluid filling circuit can not be prevented if an anti-freezing function is used. To be arranged by the user.**
- **Depends on the difference between supplied fluid temperature and set temperature might fluctuate temporarily.**

Chapter 7 Alarm Notification and Troubleshooting

7.1 Alarm Notification

- The product makes notification in the order shown below when any alarm is generated. The [ALARM] light blinks.
- The alarm buzzer sounds.
- The alarm number is displayed in the PV window on the digital display.
- Contact signal of the contact input/output communication is output.

  Refer to the Operation Manual Communication Function for more details.
- It is possible to read the alarm status using serial communication.

  Refer to the Operation Manual Communication Function for more details.

This product has two types of operation depending on the alarm being generated.

During the product operation, some of the alarms stop the product operation and some of them do not stop the operation with the alarm being generated.

Refer to the “Table 7-1 to Table 7-3”. When the operation stops due to the alarm, it is not possible to restart the operation until the alarm is reset.

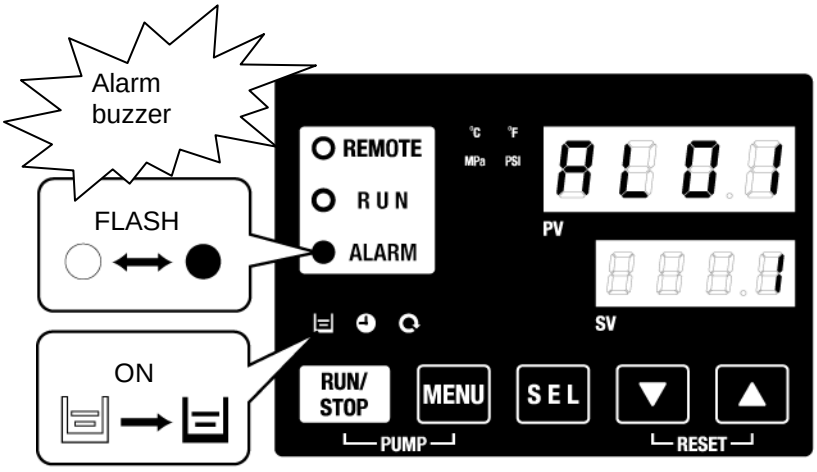

∗ [⊟] light turns ON only when “AL01 Low level in tank” alarm is being generated.

- When multiple alarms are generated, the alarm codes are displayed one by one by pressing the [SEL] button

  Alarm with the number ”1” in the SV window on the digital display is the latest alarm. The alarm with the largest number is the alarm that was generated first.

【Example of display】

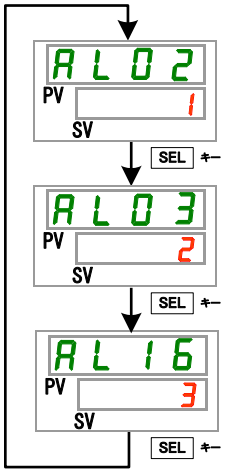

When the alarms are generated in the order of AL16, AL03, and AL02:

The alarm code displayed on the operation panel is AL02. AL03 and AL16 are displayed by pressing the [SEL] button.

When AL16 being is displayed, the SV window displays "3". In this example, AL16 has the largest number. This means AL16 is the alarm that was generated first.

7.2 Alarm buzzer stop

An alarm buzzer sounds to notify when any alarms are generated. How to stop the alarm buzzer is explained below.

- Confirm that the alarm display is shown. The alarm buzzer can be stopped only on this screen.
- Press the [▼] and [▲] buttons simultaneously, and the alarm buzzer stops.

[Tips]

- Alarm buzzers can be set not to make sound. Refer to “5.1520 Alarm Buzzer Sound Setting”. It is not necessary to follow the buzzer stop instructions when the alarm buzzer sound is set to OFF.
- If this procedure is performed when the cause of the alarm has been eliminated before stopping the alarm buzzer, the alarm will be reset at the same time.

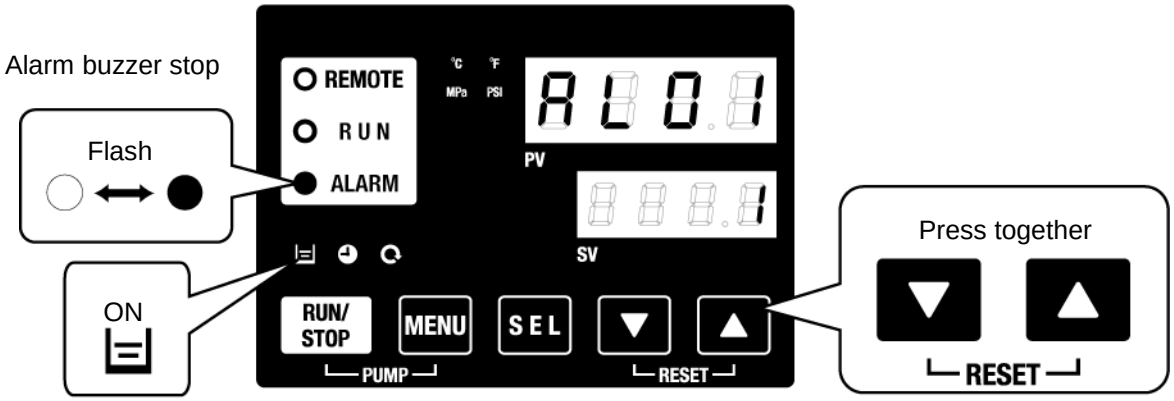

∗ [▤] light turns ON only when “AL01 Low level in tank” alarm is being generated.

7.3 Troubleshooting

7.3.1 Alarm contents, causes, and troubleshooting

Troubleshooting method varies depending on which alarm has been generated. Refer to ’’ Table 7-1 to Table 7-3’’.

Instructions to reset the alarms after eliminating the causes of the alarms explained below.

- Confirm that the alarm display is shown. Alarms can only be reset on this screen.
- Press [▼] and [▲] buttons down simultaneously.
- The alarm is reset, and the [ALARM] light turns OFF.

  The operation panel displays the circulating fluid temperature and the set circulating fluid temperature.

  Contact signal output for contact input/output communication stops.

  (Refer to the Operation Manual Communication Function for more details.)

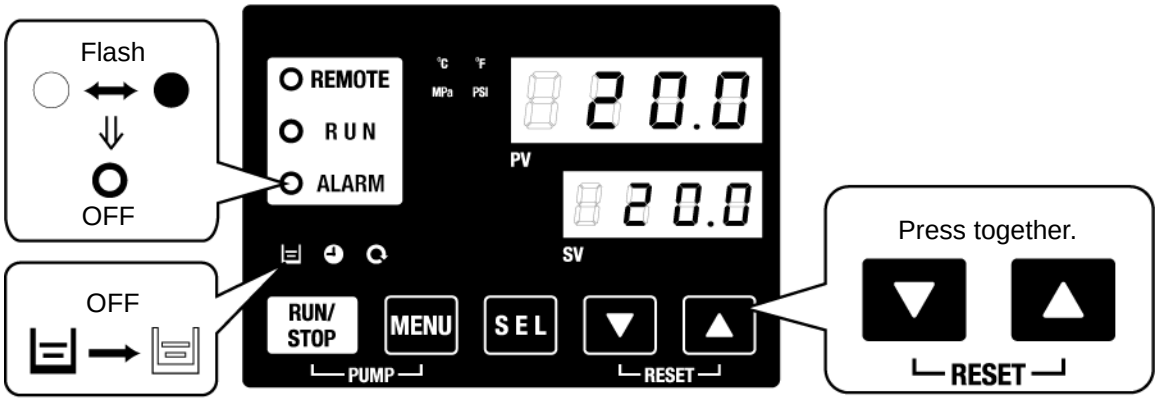

∗ [⊟] light turns ON only when “AL01 Low level in tank” alarm is being generated.

- Operation status of the thermo-chiller during the alarm is being generated can be customized by the user. Refer to “5.21 Alarm Customizing Function” for more details.

A.STP : Compressor, pump, and fan stop operation.

A.RUN : Compressor, pump, and fan continue operation.

P.RUN : Compressor and fan stop operation, and pump continues operation.

OFF : This alarm will not be generated.

* Fan operation stop is only for the air-cooled type.

Table 7-1 Alarm codes and troubleshooting (1/3)

Code	Alarm name	Alarm operation (default setting)	Cause / Remedy (Press the reset key after eliminating the cause.)
AL01	Low level in tank	A.RUN	Fluid level shown by the fluid level meter has fallen. Supply or add circulating fluid.
AL02	High circulating fluid discharge temp.	A.STP	・Check that the ambient temperature, facility water, and heat load satisfy the specifications, and that the circulating fluid flow rate is more than the minimum flow rate. ・Circulating fluid flow rate can be checked with the check “monitor menu. ・Change the set value of AS.04 to be appropriate. ・Wait until the circulating fluid temperature goes down.
AL03	Circulating fluid discharge temp. rise	A.RUN	
AL04	Circulating fluid discharge temp. drop	A.RUN	・Check that the circulating fluid temperature supplied to the tank is within the specified range. ・Change the set value of AS.06 to be appropriate.
AL05	High circulating fluid return temp.	A.STP	・Check that the circulating fluid flows. ・Check that the heat load is within the specified range.
AL06	High circulating fluid discharge pressure	A.STP	Check that there is no bend, collapse and clog on/in the external piping.
AL07	Abnormal pump operation	A.STP	The pump does not operate. Check that the pump thermal operation switch is operated.
AL08	Circulating fluid discharge pressure rise	A.STP	Check that there is no bending, collapse, or clogging with the external piping. "EEEE" shown on the PI display in the check monitor menu indicates shirt-circuit or broken wire of the pressure sensor in the circulating fluid circuit. Ask for the service for the pressure sensor..
AL09	Circulating fluid discharge pressure drop	A.STP	Restart the thermo-chiller and check if the pump runs. In case of displaying EEEE on the PI display of the main display and check monitor menu, the pressure sensor of the circulating fluid circuit has a malfunction. Ask the service.
AL10	High compressor suction temp.	P.RUN	・Check the circulating fluid temperature returning to the thermo-chiller. ・Check that the heat load is within the specified range.
AL11	Low compressor suction temp.	P.RUN	・Check that the circulating fluid flows. ・ Use a 15% ethylene glycol aqueous solution when operating with a set temperature lower than 10 °C.
AL12	Low super heat temperature	P.RUN	
AL13	High compressor discharge pressure	P.RUN	Check that the ambient temperature, facility water, and heat load satisfy the specifications.
AL15	Refrigerant circuit pressure (high pressure side) drop	P.RUN	Refrigerant circuit failed. Ask for service for the refrigerant circuit.
AL16	Refrigerant circuit pressure (low pressure side) rise	P.RUN	Check that the ambient temperature, facility water, and heat load satisfy the specifications.
AL17	Refrigerant circuit pressure (low pressure side) drop	P.RUN	・Check that the circulating fluid flows. ・It is possible that refrigerant is leaking. Ask for the service.
AL18	Compressor running failure	P.RUN	Leave it for 10 minutes, and then restart the thermo-chiller. Check if the pump operates.
AL19	Communication error	OFF	Try to send the request message again.
AL20	Memory error	A.STP	Controller failure. Ask for service for the controller.

Table 7-2 Alarm codes and troubleshooting (2/3)

Code	Alarm name	Alarm operation*1 (Default setting)	Cause / Remedy (Press the reset key after eliminating the cause.)	
AL21	DC line fuse cut	A.STP	Fuse for the power supply output of the contact input/output connector has blown. ・Ask for service for the fuse of the output voltage circuit. ・Check that there is no incorrect wiring and the current load is within the specified range.	
AL22	Circulating fluid discharge temp. sensor failure	A.STP	Short-circuit or broken wire of the temperature sensor. Ask for service for the temperature sensor.	
AL23	Circulating fluid return temp. sensor failure	A.STP		
AL24	Compressor suction temp. sensor failure	P.RUN		
AL25	Circulating fluid discharge pressure sensor failure	A.STP	Short-circuit or broken wire of the pressure sensor of the circulating fluid circuit. EEEE is displayed on the PI display of the main display and check monitor display. Ask for service for the pressure sensor.	
AL26	Compressor discharge pressure sensor failure	P.RUN	Short-circuit or broken wire of the pressure sensor of the refrigerant circuit. Ask for service for the pressure sensor.	
AL27	Compressor suction pressure sensor failure	P.RUN		
AL28	Pump maintenance	OFF	Notices of the periodical maintenances. Ask for services of the pump, fan and/or compressor. Reset the operation cumulated time for each alarm with the menu SE.15, SE.16 or SE.17 after having the service.	Every 8,000 hours ∗2
AL29 ∗1	Fan maintenance	OFF		Every 30,000 hours
AL30	Compressor maintenance	OFF		Every 30,000 hours
AL31	Contact input 1 signal detection	A.STP	Contact input has been detected.	
AL32	Contact input 2 signal detection	A.STP		
AL37	Compressor discharge temp. sensor failure	P.RUN	Short-circuit or broken wire of the temperature sensor. Ask for service for the temperature sensor.	
AL38	Compressor discharge temp. rise	P.RUN	Check that the ambient temperature, facility water, and heat load satisfy the specifications.	
AL40 ∗1	Dust-proof filter maintenance	OFF	Notice of the periodical maintenance. Clean the dust-proof filter. Reset the operation cumulated time for the alarm with the menu SE.30 after cleaning the filter. This alarm can be OFF with the menu AS.29.	1 to 9999 hours (AS.31)

*1: Water-cooled type model does not generate this alarm.

∗2: Notice on mechanical seal replacement.

Mechanical seal replacement is limited to 2 times.

If the cumulative operation time of the pump exceeds 20,000 hours, please consider requesting pump inspection service.

Table 7-3 Alarm codes and troubleshooting (3/3)

Code	Alarm name	Alarm operation*1 (Default setting)	Cause / Remedy (Press the reset key after eliminating the cause.)
AL41	Power stoppage	A.STP	Power supply has been stopped during the product operation. Restart the power supply after checking.
AL42	Compressor waiting	A.RUN	Waiting for the compressor to be ready for operation. Wait for a while. The alarm will be reset automatically after starting operation.
AL43 *1	Fan failure	P.RUN	Check that there is no power failure such as ground fault, short circuit, voltage fluctuation, abnormal interphase voltage, open phase, surge.
AL45	Compressor over current	P.RUN	Check that there is no power failure such as ground fault, short circuit, voltage fluctuation, abnormal interphase voltage, open phase, surge. Release the compressor thermal trip referring to [7.3.2 How to release the thermal relay trip and circuit protector].
AL47	Pump over current	A.STP	Check that there is no power failure such as ground fault, short circuit, voltage fluctuation, abnormal interphase voltage, open phase, surge. Release the pump thermal trip referring to [7.3.2 How to release the thermal relay trip and circuit protector].
AL50	Incorrect phase error	A.STP	The phase of the power line is connected by incorrect phase.
AL51	Phase board over current	A.STP	Check that there is no power failure such as ground fault, short circuit, voltage fluctuation, abnormal interphase voltage, open phase, surge. Release the circuit protector trip referring to [7.3.2 How to release the thermal relay trip and circuit protector].

*1: Water-cooled type model does not generate this alarm.

7.3.2 How to release the thermal relay trip and circuit protector

⚠ WARNING

Be sure to lock out and tag out the breaker of the facility power supply (customer power supply facility) before wiring.

1. Shut of the breaker of the customer's power supply facility.

2. Remove 12 screws to remove the upper panel.

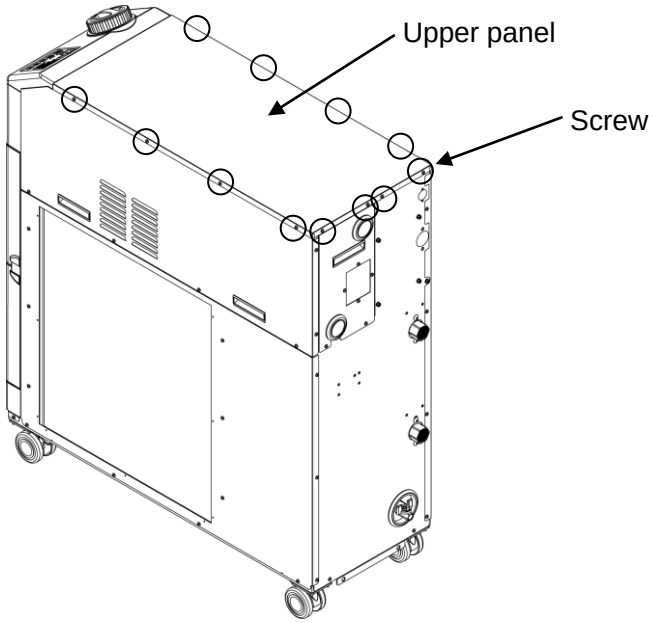

Fig. 7-1 Removal of upper panel

3. Remove 7 screws to remove the panel for electrical unit.

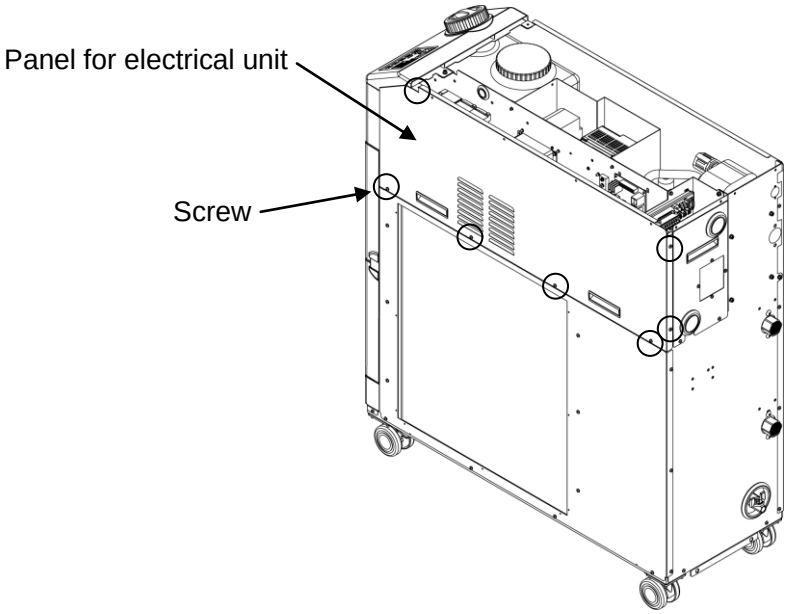

Fig. 7-2 Remove the panel of the electrical unit

4. Confirm if the thermal relay or the circuit protector are tripped. If the thermal relay tripped, push the reset buttan. If the circuit protector tripped, make it ON by pushing up the lever.

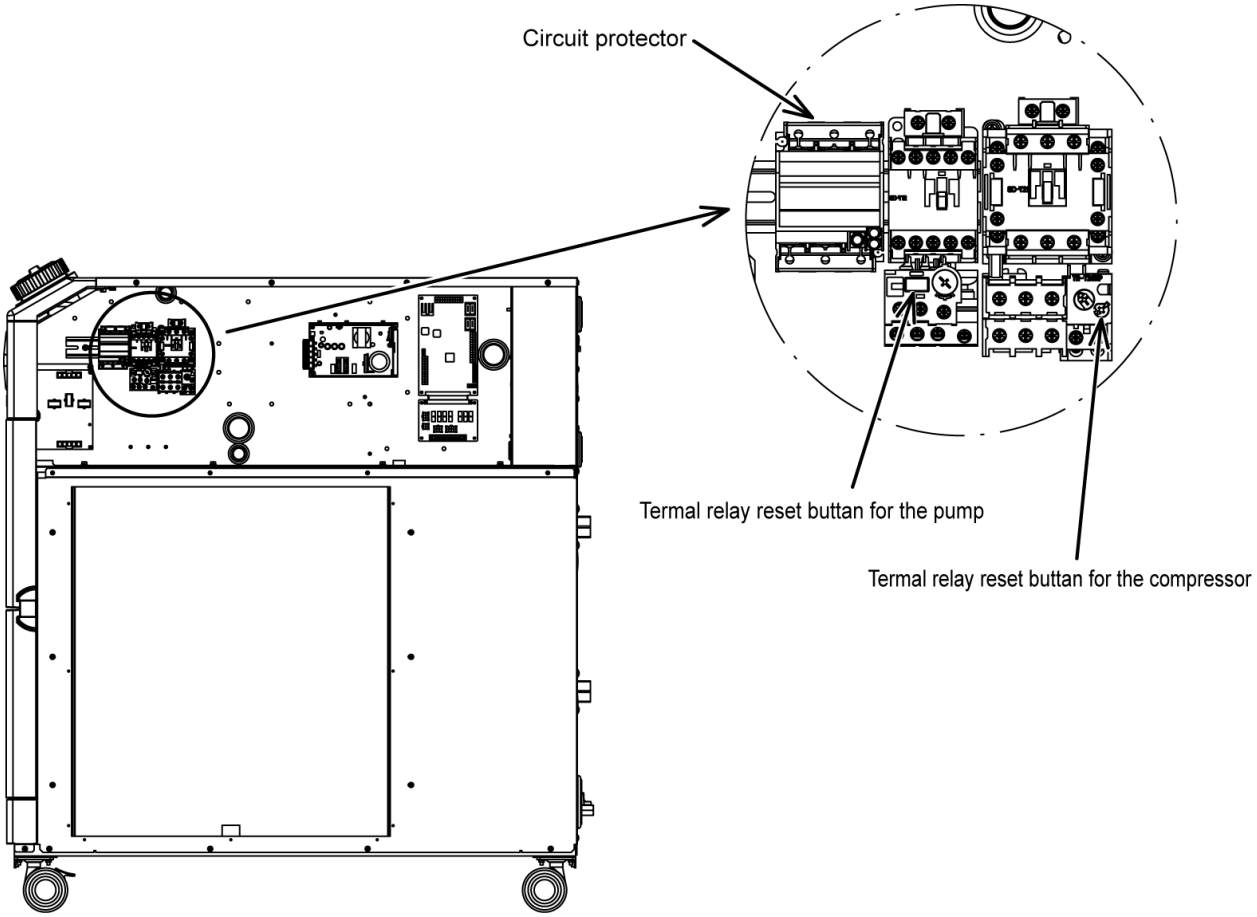

Fig. 7-3 Thermal relay and circuit protector location and statuses

5. Fasten the front cover of the electrical unit.

⚠ WARNING

Be sure to fasten the front panel of the electrical unit before turn on the breaker of the facility power supply (customer power supply facility). Othewise it may cause an electrical shock and death.

7.3.3 How to release the pump thermal trip

⚠ WARNING

Be sure to lock out and tag out the breaker of the facility power supply (customer power supply facility) before wiring.

1. Shut of the breaker of the customer's power supply facility.

2. Remove 12 screws to remove the upper panel.

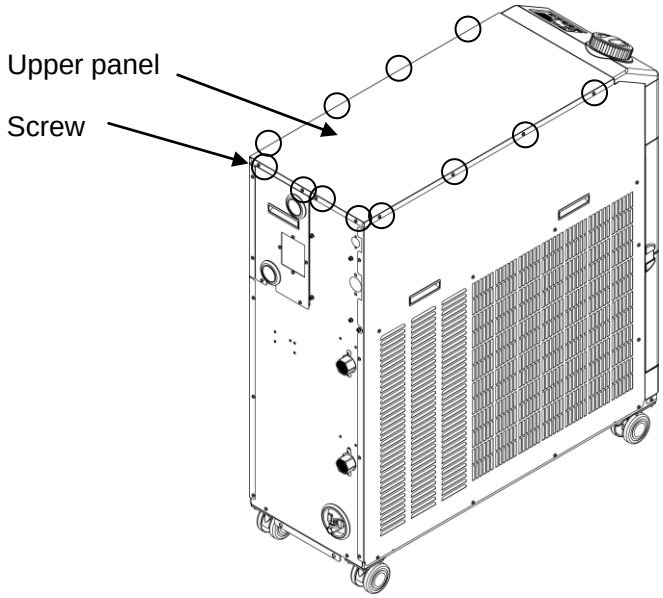

Fig. 7-4 Removal of upper panel

3. Remove 15 screws to remove the Left side panel.

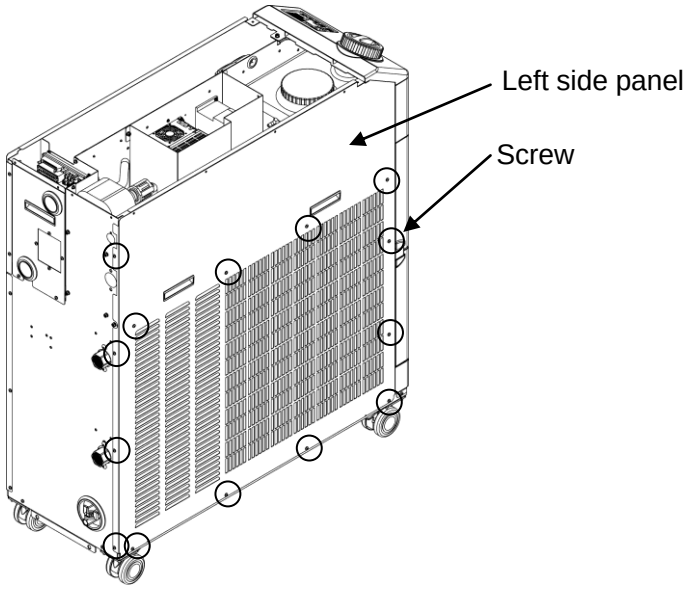

Fig. 7-5 Removal of Left side panel

4. Check if the pump thermal switch is tripped.

The pump thermal switch is under the rubber cover.

When you feel the pump thermal switch directly under the cover, the switch is tripped.

If you press the switch from the cover and you do not feel the switch head directly under the cover, the tripping is released.

(You can not see if the pump thermal switch is tripped from the appearance.)

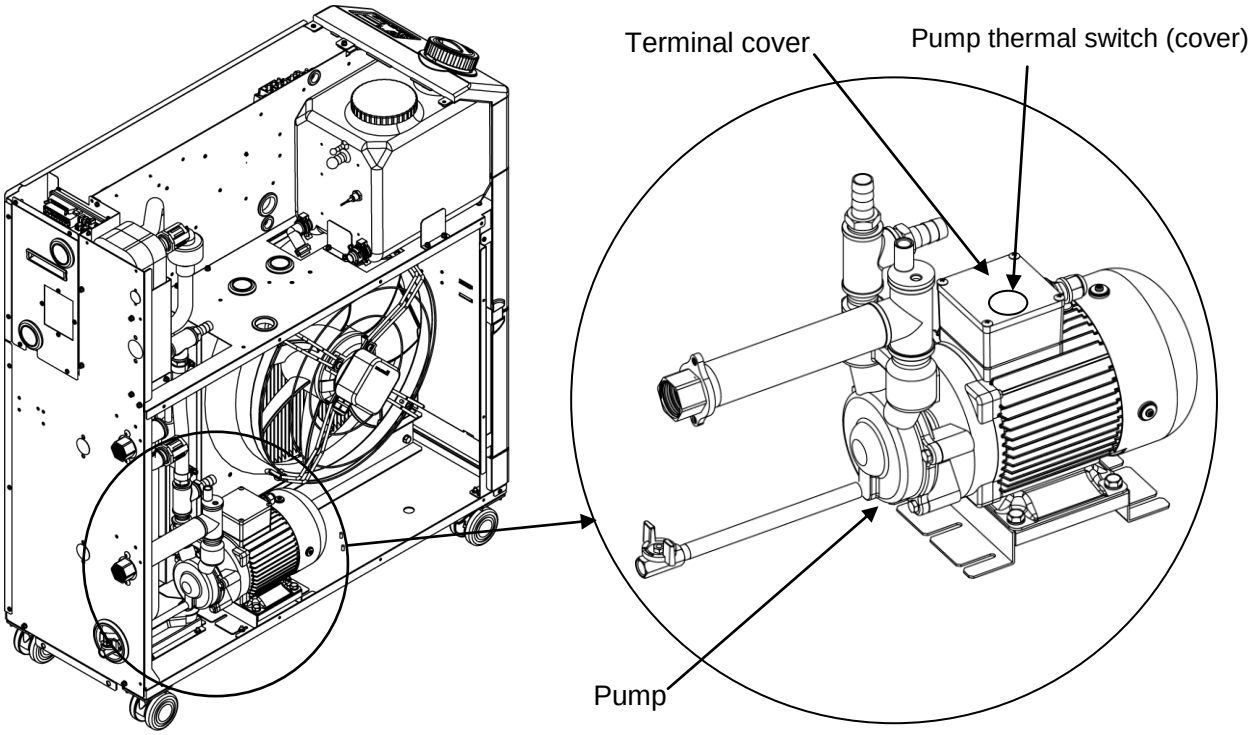

Fig. 7-6 Pump thermal switch location and statuses

5. Mount the side panel and the upper panel in the reverse order of the removal.

7.4 Other Errors

■ How to check other errors

The causes and remedies for failures that are not indicated by alarm numbers are shown in ’’Table 7-4’’.

Table 7-4 Possible causes and countermeasures for failures without alarm number

Content of failure	Possible cause	Countermeasure
The operation panel displays nothing.	The breaker of the user’s power supply or/and the optional breaker is/are not turned ON.	Turn ON the breaker.
	The breaker of the user’s power supply or the optional breaker has failed.	Replace the breaker.
	No power supply. (e.g. Breaker(s) in the power supplying route has not been turned ON.)	Supply the power.
	The breaker for the user’s facility or the optional breaker has tripped due to short-circuit or leakage of electricity.	Repair the short-circuited part or the electricity leaking part.
The [RUN] light does not turn ON when the [RUN/STOP] button is pressed.	Communication setting has been turned ON.	Check if the communication setting has been turned ON.
	Failure of the [RUN] light	Replace the controller.
	Failure of the [RUN/STOP] button	Replace the controller.

* Check the supply voltage with a tester.

Chapter 8 Control, Inspection and Cleaning

8.1 Quality Control of Circulating Fluid and Facility Water

⚠ WARNING

Use specified fluids only. If other fluids are used, they may damage the product, causing fluid leakage, or result in hazards such as electric shock or leakage of electricity.
When using clear water (tap water), ensure that it satisfies the water quality criteria shown in the table below.
If the water quality standards are not met, clogging or leakage in the facility water piping, or other problems such as refrigerant leakage, etc., may result.

Table 8-1 Quality criteria for clean water (tap water)

	Item	Unit	Standard value	
			For circulating fluid	For facility water
Standard item	pH (at 25°C)	—	6.0 to 8.0	6.5 to 8.2
	Electric conductance (at 25°C)	[μS/cm]	100 to 300	100 to 800
	Chloride ion	[mg/L]	50 or less	200 or less
	Sulfuric acid ion	[mg/L]	50 or less	200 or less
	Acid consumption (at pH 4.8)	[mg/L]	50 or less	100 or less
	Total hardness	[mg/L]	70 or less	200 or less
	Calcium hardness	[mg/L]	50 or less	150 or less
	Ion silica	[mg/L]	30 or less	50 or less
Referential item	Iron	[mg/L]	0.3 or less	1.0 or less
	Copper	[mg/L]	0.1 or less	0.3 or less
	Sulfide ion	[mg/L]	Not detected	Not detected
	Ammonium ion	[mg/L]	0.1 or less	1.0 or less
	Residual chlorine	[mg/L]	0.3 or less	0.3 or less
	Separation carbonic acid	[mg/L]	4.0 or less	4.0 or less

∗ Quoted from JRA-GL-02-1994, The Japan Refrigeration and Air Conditioning Industry Association.

CAUTION

Replace the circulating fluid and/or the facility water if any problems are found in the regular check. Even if no problems are found, some of the water in the tank evaporates and impurity concentration in the circulating fluid increases. Replace the circulating fluid on the tank once in every 3 months. Refer to the section "7.2 Inspection and Cleaning" for regular inspection.

8.2 Inspection and Cleaning

⚠ WARNING

- **Do not perform button operation or setting of this equipment with wet hands. Do not touch the electrical parts such as the power supply plug. It may cause an electric shock.**
- **Do not splash water directly on the product or do not wash with water. It might cause electric shock, fire, or etc.**
- **Do not touch the fins directly when cleaning the dust-proof filter. It may cause injury.**

⚠ WARNING

Shut off the power supply to this product before performing cleaning, maintenance or inspection, or it may cause electric shock, injury, burn, or etc.When the panel has been removed for the purpose of inspection or cleaning, mount the panel after the work is completed.If the product is operated with the panel removed or open, it may cause injury or electric shock.

8.2.1 Daily check

Check the items listed below. If any abnormality is found, stop the operation of the product and turn the power supply OFF, and ask for service.

Table 8-2 Daily check items

Item	Contents of check	
Installation condition	Check the installation condition of the product.	Check that there is no heavy object on the product or excessive force appying to the piping.
		Temperature should be within the specification range of the product.
Fluid leakage	Check the connected parts of the piping.	Check that there is no fluid leakage from the connected parts of the piping.
Amount of circulating fluid	Check the liquid level indicator.	Fluid level should be between "HIGH" and "LOW" levels of the fluid level meter.
Operation panel	Check the indications on the display.	The numbers shown on the display should be clear and legible.
	Check the functionality.	Check that the buttons, [RUN/STOP], [MENU], [SEL], [▼], and [▲], operate correctly.
Circulating fluid temperature	Check on the operation panel.	There should be no problem for operation.
Circulating fluid flow rate	Check on the operation panel.	There should be no problem for operation. If flow rate has become smaller, check for any clogging of the Y-strainer and clean it.
Operating condition	Check the operating condition of the product	There should be no abnormality with noise, vibration, smell, or generation of smoke.
Facility water (for water-cooled type)	Check the facility water condition.	Check that the temperature, puressure and flow rate are within the specification ranges.

8.2.2 Monthly check

Table 8-3 Contents of monthly check

Item	Contents of check	
Ventilating condition (air cooled type)	Clean the ventilating grilles.	Make sure the ventilating grilles are not clogged with dust, etc.
Facility water (water cooled type)	Check the facility water.	Make sure the facility water is clean and contains no foreign matter.

■ Cleaning of air ventilation port (Air cooled type.)

CAUTION

If the fins of the air-cooled condenser become clogged with dust or debris, heat radiation performance declines. This will result in the reduction of cooling performance, and may stop the operation because the safety device is triggered.

Clean the dust-proof filters with a long bristled brush or by air blow to prevent the fins from being deformed or damaged.

■ Removal of the dust-proof filter

1. The dust-proof filters are installed on the front and left sides of the product.
The dust-proof filters are mounted at four sections. They are all identical in shape.

2. They can be removed as shown in the drawing below.
Care should be taken not to deform or scratch the air cooled condenser (fins) while removing the filters.

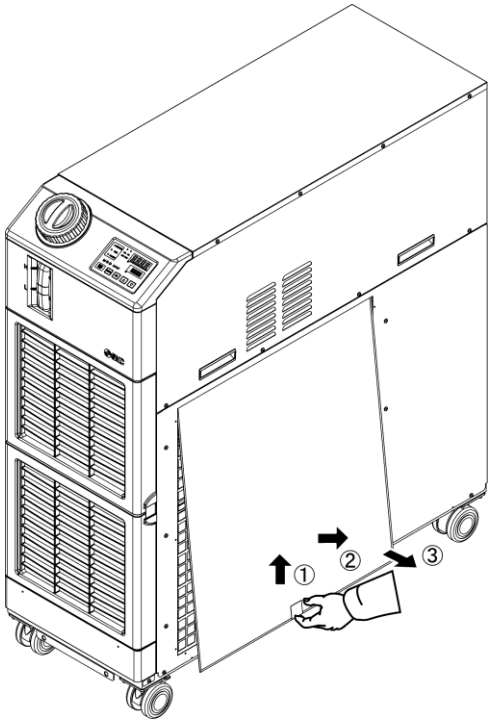

Fig. 8-1 Removal of the dust-proof filter

■ Cleaning of dust-proof filter

Clean the dust-proof filters with a long bristled brush or by air blow.

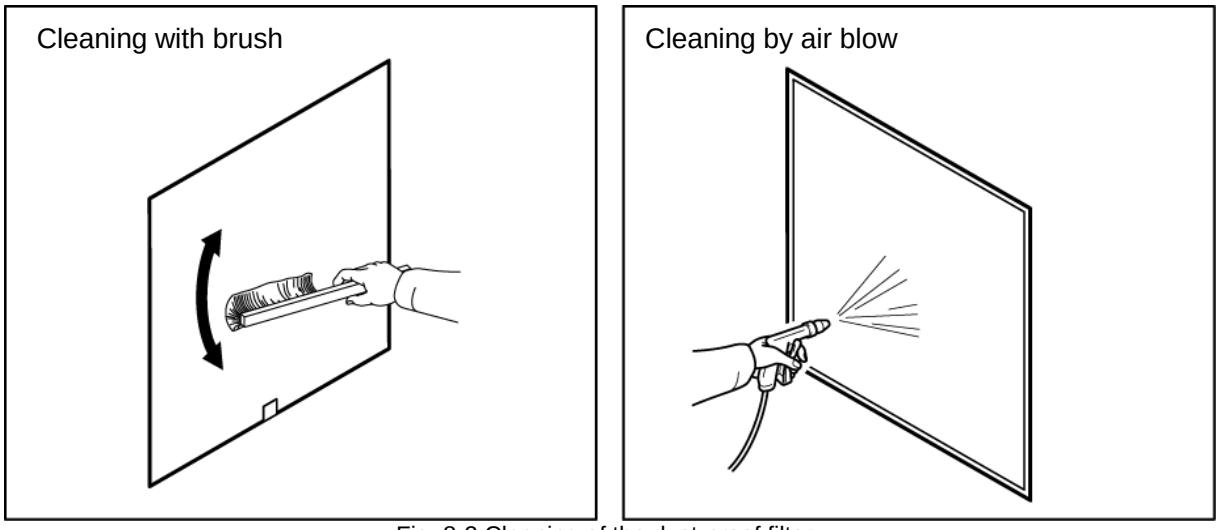

Fig. 8-2 Cleaning of the dust-proof filter

■ Mounting of dust-proof filters

Reassemble the filters in the reverse order to the removing procedure.

8.2.3 Inspection every 3 months

Table 8-4 Contents of every 3 months check

Item	Contents of check	
Power supply	Check the power supply voltage.	- Make sure the supply voltage is within the specification range.
Circulating fluid	Replace the circulating water (clean water) periodically.	- Ensure that the water has not been contaminated and that there is no algae growth. - Circulating water inside the tank must be clean and there must not be foreign matter inside. - Use clean water or pure water. The water quality must be within the range shown in Table 8-1. * It is recommended to replace the circulating fluid every 3 months when periodic maintenance is performed.
	Density control (When using 15% concentration ethylene glycol aqueous solution)	- Density must be within the range of 15 % +5/-0.
Facility water (For water-cooled type)	Check the water quality.	- Ensure that the water is clean and contains no foreign matter. Also check that the water has not been contaminated and there is no algae growth. - The water quality must be within the range shown in Table 8-1.

■ Replacement of circulating fluid

- Replace the circulating fluid with new clean fluid periodically, or it may get algae or decompose.
- Circulating fluid to be supplied in the tank should satisfy the water quality specified in “Table 8-1”.
- When using 15% ethylene glycol solution, check that the concentration is within the range of 15% +5/-0.
- Do NOT use chlorine-based or such types of detergents or cleansers.
- When using the Y strainer provided as an accessory for piping, clean the screen mesh inside the strainer at the same time as when replacing the circulating fluid.

  Ensure that there is no circulating fluid in the thermo-chiller, user's equipment, and piping. Remove the cap and take out the screen mesh inside, and clean the screen mesh with compressed air or detergent. Use caution not to damage the screen mesh.

■ Clean the customer's facility water system (water cooled type)

- Clean the customer's facility water system and replace facility water.
- Facility water quality must satisfy the criteria specified in “Table 8-1”

CAUTION

If there is foreign matter accumulated or clogging in the facility water system, pressure loss increases with less flow rate, and it may damage the screen mesh.

8.2.4 Inspection every 6 months

■ Check for water leakage from pump

Remove the panel and check the pump for excessive leakage. If the leakage is found, replace the mechanical seal. Order the mechanical seal described in “8.3 Consumables” as a service part.

CAUTION

Leakage from the mechanical seal
It is impossible to prevent the leakage from the mechanical seal completely because of its structure. Although the leakage is described as 3cc/hr or less.
The recommend life time of the mechanical seal before needing replacement is 6000 to 8000 hours.

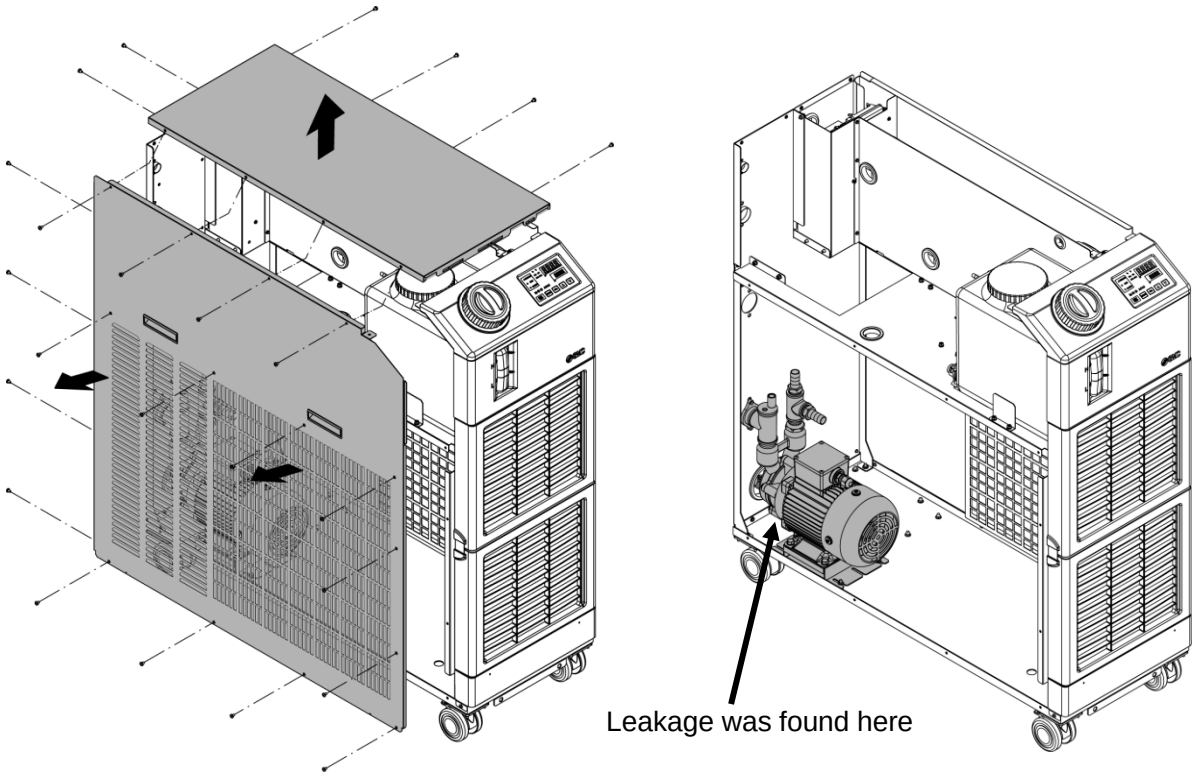

Fig. 8-3 Check for water leakage from pump

8.2.5 Inspection during winter season

CAUTION

Keep the power supply ON for these functions. These functions do not start when the power is OFF.

■ Anti-freezing function

This function prevents freezing of the circulating fluid while the product stops operation in the winter season with heat generated by automatically operating the pump. When there is a possibility of the circulating fluid freezing due to changes in the installation or operating environment (e.g. season, weather), set this function ON in advance.

*For details, refer to “5.11 Anti-freezing function”.

■ Warming up function

This function maintains the circulating fluid temperature to the set warming-up temperature with heat generated by automatically operating the pump in the winter season or at night.

When the time required for increasing the temperature of the circulating fluid needs to be shortened at startup, set this function ON in advance.

*For details, refer to “5.17 Warming up function”.

■ For freezing of the facility water

When there is a possibility of the facility water being frozen, make sure to discharge all the facility water from the facility water circuit.

*For the details, refer to “8.4.2 Discharge of the facility water”.

8.3 Consumables

Replace the following parts depending on their condition.

Table 8-5 Consumables

Part number	Name	Qty.	Remarks
HRS-S0306	Dust-proof filter	1	1 pcs are used per unit
HRS-S0307	Mechanical seal set	1	1 set are used per unit
HRS-S0350	Mechanical seal set	1	1 set are used per unit (For option M)

8.4 Operation Stop for an Extended Period of Time

If there is a concern that the product will not be operated for an extended period of time or there is a possibility of freezing in the winter time, take the measures according to the instructions shown below.

1. Turn OFF the earth leakage breaker of the user's power supply. (Turn OFF the breaker for the optional breaker for option B [Earth leakage breaker].)

2. Discharge all the circulating fluid completely from the thermo-chiller.

   Please refer to "8.4.1 Discharge of the circulating fluid" for the method of drain the circulating fluid from the product.

3. After discharging the circulating fluid, cover the product with a sheet (to be prepared by user) before storing the product.

8.4.1 Discharge of the circulating fluid

⚠ WARNING

- **Before discharging the circulating fluid, stop the user's equipment and release the residual pressure.**

1. Turn OFF the breaker of the user's power supply.

2. Place a container underneath the drain outlet.

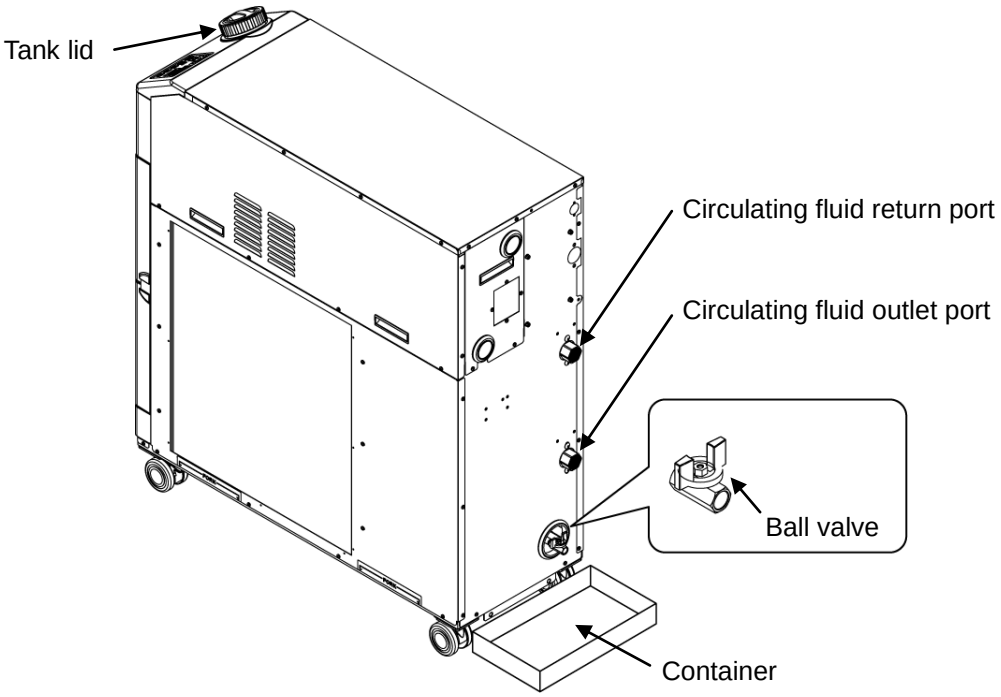

Fig. 8-4 Drain the circulating fluid

3. Remove the tank lid.

4. Open the ball valves of the drain port and drain the fluid.

5. Confirm that all the circulating fluid has been drained from the product and the user's machine and piping, and apply air purge from the circulating fluid return port.

6. After discharging the circulating fluid from the drain port, remove residual liquid in the tank using a syringe or waist cloth.

7. Close the ball valve and mount the tank lid.

■ How to connect to the drain port

When piping the drain port, hold the ball valve of the drain port with a wrench not to rotate it.

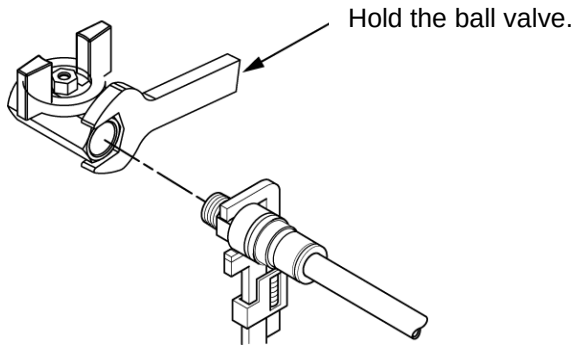

Fig. 8-5 Connection to the drain

⚠ CAUTION

Without holding the ball valve of the drain port with a wrench, the ball valve may rotate and it may cause a fluid leakage and malfunction of the product. Be sure to hold the ball valve of the drain port.

8.4.2 Discharge of the facility water (Water-cooled type)

⚠ WARNING

- **Before discharding the facility water, stop operation of the user's equipment and release the residual pressure.**

1. Shut off the breaker of the customer's power supply.

2. Stop supplying the facility water and make sure there is no pressure in the facility water piping.

3. Remove the facility water piping from the product.

4. Open the Left side panel then, open the air vent valve. The facility water in the product will be drained from the facility water inlet port.

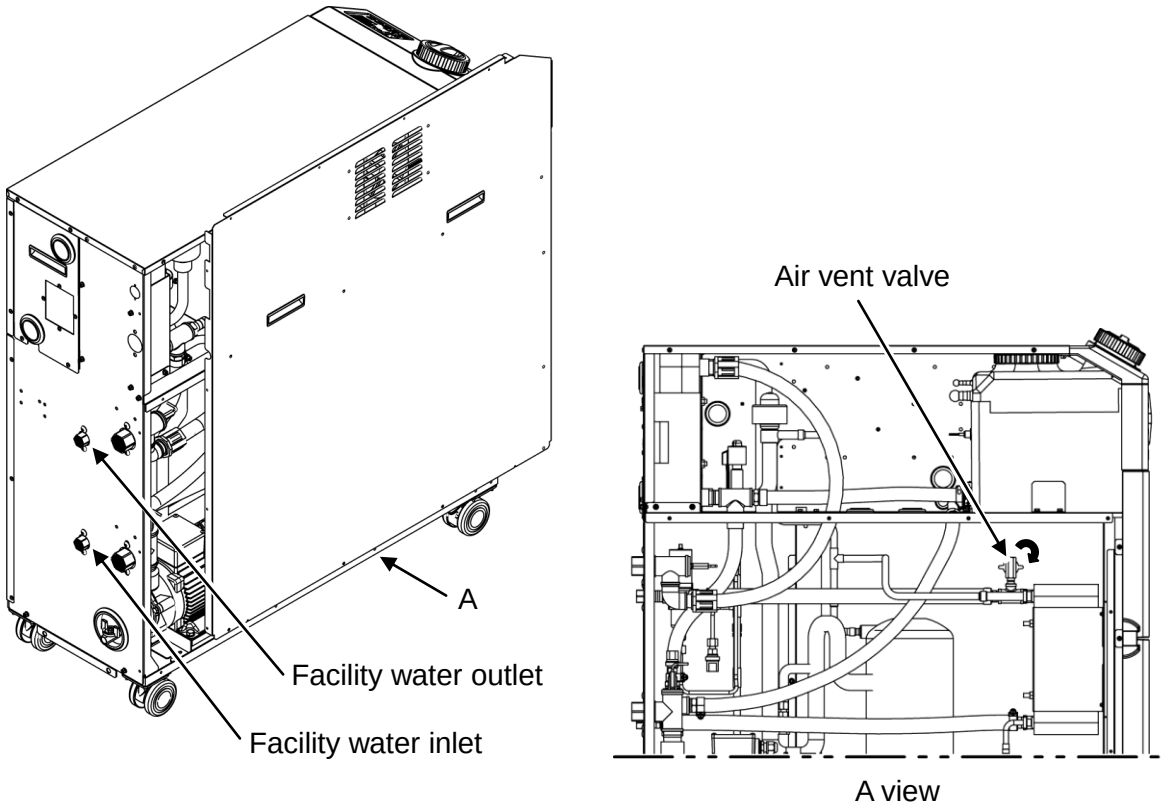

Fig. 8-6 Discharge of the facility water

After draining, shut the air vent valve and close the Left side panel.

Chapter 9 Documents

9.1 Specifications

9.1.1 HRS090-A∗-20∗

Table 9-1 Specifications [HRS090-A∗-20∗]

Model				HRS090-A∗-20∗
Cooling method				Air-cooled refrigerated type
Refrigerant				R410A (HFC)
Quantity of refrigerant			kg	1.15
Control method				PIDcontrol
Ambient temperature*1			°C	5 to 45
Circulating fluid system	Circulating fluid*2			Tap water, Ethylene glycol aqueous solution 15%, Deionized water
	Operating temperature range*1		°C	5 to 35
	Cooling capacity 50/60Hz *3		kW	8.0 / 9.0
	Heating capacity*4		kW	1.7 / 2.2
	Temperature stability*5		°C	±0.5
	Pump capacity	Rated flow rate 50/60Hz (Outlet) *6	L/min	29 / 45
		Maximum flow rate 50/60Hz	L/min	55 / 68
		Maximum lifting height	m	50
	Minimum operating flow rate 50/60Hz *7		L/min	29 / 45
	Tank capacity		L	18
	Circulating fluid outlet, circulating fluid return port			Rc1 (Symbol F: G1, Symbol N: NPT1)
	Drain port			Rc1/4 (Symbol F: G1/4, Symbol N: NPT1/4)
	Wetted material			Stainless, Cupper(Heat exchanger brazing), Brass, Bronze, PTFE, FKM, EPDM, PVC, NBR, POM, PE, PP, Carbon, Ceramic
Electric system	Power supply			AC200/200-230V 50/60Hz 3phase Allowable voltage fluctuation ±10% (No continuous voltage fluctuation)
	Recommended earth leakage breaker*8	Rated current	A	30
		Sensitivity	mA	30
	Rated operating current 50/60Hz *5		A	16 / 18
	Rated power consumption 50/60Hz*5		kW (kVA)	4.3 / 5.4 (5.5 / 6.0)
Sound level (Front 1m / Height 1m) *5			dB(A)	73
Accessory				Alarm cord list label 2pc.(English 1pc./Japanese 1pc.), Operation manual 2pc. (English 1pc./Japanese 1pc.), Y strainer (40 meshes) 25A, Barrel nipple 25A Anchor brackets 2pcs.(including M10 bolts 4pcs.)*9
Weight (dry condition)			kg	Approx.136

∗1 Use 15% ethylene glycol aqueous solution if operating in a place where the circulating fluid temp. or ambient temperature is lower than 10 °C

∗2 Use fluid in condition below as the circulating fluid.
Tap water: Standard of The Japan Refregeration And Air Conditioning Industry Association (JRA GL-02-1994)
15% ethylene glycol aqueous solution: diluted by tap water in condition above without any additives such as antiseptics.
Deionized water: Conductivity 1μS/cm and higher (electrical resistivity 1MΩ･cm and lower)

∗3 (1)Operating ambient temp.: 32 °C, (2)Circulating fluid : Tap water, (3)Circulating fluid temp.: 20 °C, (4)Criculating fluid flow rate : Rated flow rate, (5)Power supply: AC200V

∗4 (1)Operating ambient temp.: 32 °C, (2)Circulating fluid : Tap water, (3) Circulating fluid flow rate : Rated flow rate, (4)Power supply: AC200V

∗5 (1)Operating ambient temp.: 32 °C, (2)Circulating fluid : Tap water, (3)Circulating fluid temp.: 20 °C, (4)Heat load : Same as the cooling capacity, (5)Circulating fluid flow rate: Rated flow rate, (6)Power : AC200V, (7) External piping length: Minimum.

∗6 When circulating fluid outlet port pressure = 0.5MPa.

∗7 Fluid flow rate to maintain the cooling capacity and to keep the circulating fluid outlet port puressure to 0.5MPa or less. If the actual flow rate is lower than this, please install a bypass piping.

∗8 To be prepared by the customer. A specified earth leakage breaker is installed for option B [Earth leakage breaker] of each model.

∗9 The anchor brackets (including M10 bolts) are used for fixation with the skid when this product is packed. The anchor bolts are not attached.

9.1.2 HRS090-A∗-40∗

Table 9-2 Specifications [HRS090-A∗-40∗]

Model				HRS090-A∗-40∗
Cooling method				Air-cooled refrigerated type
Refrigerant				R410A (HFC)
Quantity of refrigerant			kg	1.15
Control method				PIDcontrol
Ambient temperature*1			°C	5 to 45
Circulating fluid system	Circulating fluid*2			Tap water, Ethylene glycol aqueous solution 15%, Deionized water
	Operating temperature range*1		°C	5 to 35
	Cooling capacity 50/60Hz *3		kW	8.0 / 9.0
	Heating capacity*4		kW	1.7 / 2.2
	Temperature stability*5		°C	±0.5
	Pump capacity	Rated flow rate 50/60Hz (Outlet) *6	L/min	29 / 45
		Maximum flow rate 50/60Hz	L/min	55 / 68
		Maximum lifting height	m	50
	Minimum operating flow rate 50/60Hz *7		L/min	29 / 45
	Tank capacity		L	18
	Circulating fluid outlet, circulating fluid return port			Rc1 (Symbol F: G1, Symbol N: NPT1)
	Drain port			Rc1/4 (Symbol F: G1/4, Symbol N: NPT1/4)
	Wetted material			Stainless, Cupper(Heat exchanger brazing), Brass, Bronze, PTFE, FKM, EPDM, PVC, NBR, POM, PE, PP, Carbon, Ceramic
Electric system	Power supply			AC380-415V 50/60Hz 3phase Allowable voltage fluctuation ±10% (No continuous voltage fluctuation)
	Earth leakage breaker(Standard)	Rated current	A	20
		Sensitivity	mA	30
	Rated operating current 50/60Hz *5		A	8.4 / 9.1
	Rated power consumption 50/60Hz*5		kW (kVA)	4.4 / 5.6 (5.8 / 6.3)
Sound level (Front 1m / Height 1m) *5			dB(A)	75
Accessory				Alarm cord list label 2pc.(English 1pc./Japanese 1pc.), Operation manual 2pc. (English 1pc./Japanese 1pc.), Y strainer (40 meshes) 25A, Barrel nipple 25A Anchor brackets 2pcs.(including M10 bolts 4pcs.)*8
Weight (dry condition)			kg	Approx.136
Compliance standard	CE Marking	EMC directive		2004/108/EC
		Machinery directive		2006/42/EC

∗1 Use 15% ethylene glycol aqueous solution if operating in a place where the circulating fluid temp. or ambient temperature is lower than 10 °C

∗2 Use fluid in condition below as the circulating fluid.
Tap water: Standard of The Japan Refregeration And Air Conditioning Industry Association (JRA GL-02-1994)
15% ethylene glycol aqueous solution: diluted by tap water in condition above without any additives such as antiseptics.
Deionized water: Conductivity 1μS/cm and higher (electrical resistivity 1MΩ･cm and lower)

∗3 (1)Operating ambient temp.: 32 °C, (2)Circulating fluid : Tap water, (3)Circulating fluid temp.: 20 °C, (4)Criculating fluid flow rate : Rated flow rate, (5)Power supply: AC400V

∗4 (1)Operating ambient temp.: 32 °C, (2)Circulating fluid : Tap water, (3) Circulating fluid flow rate : Rated flow rate, (4)Power supply: AC400V

∗5 (1)Operating ambient temp.: 32 °C, (2)Circulating fluid : Tap water, (3)Circulating fluid temp.: 20 °C, (4)Heat load : Same as the cooling capacity, (5)Circulating fluid flow rate: Rated flow rate, (6)Power : AC400V, (7) External piping length: Minimum.

∗6 When circulating fluid outlet port pressure = 0.5MPa.

∗7 Fluid flow rate to maintain the cooling capacity and to keep the circulating fluid outlet port puressure to 0.5MPa or less. If the actual flow rate is lower than this, please install a bypass piping.

∗8 The anchor brackets (including M10 bolts) are used for fixation with the skid when this product is packed. The anchor bolts are not attached.

9.1.3 HRS090-W∗-20∗

Table 9-3 Specifications[HRS090-W∗-20∗]

Model				HRS090-W∗-20∗
Cooling method				Water-cooled refrigerated type
Refrigerant				R410A (HFC)
Quantity of refrigerant			kg	1.15
Control method				PIDcontrol
Ambient temperature[*1]			°C	5 to 45
Circulating fluid system	Circulating fluid[*2]			Tap water, Ethylene glycol aqueous solution 15%, Deionized water
	Operating temperature range[*1]		°C	5 to 35
	Cooling capacity 50/60Hz [*3]		kW	9.0 / 10.5
	Heating capacity[*4]		kW	1.7 / 2.2
	Temperature stability[*5]		°C	±0.5
	Pump capacity	Rated flow rate 50/60Hz (Outlet) [*6]	L/min	29 / 45
		Maximum flow rate 50/60Hz	L/min	55 / 68
		Maximum lifting height	m	50
	Minimum operating flow rate 50/60Hz [*7]		L/min	29 / 45
	Tank capacity		L	18
	Circulating fluid outlet, circulating fluid return port			Rc1 (Symbol F: G1, Symbol N: NPT1)
	Drain port			Rc1/4 (Symbol F: G1/4, Symbol N: NPT1/4)
	Wetted material			Stainless, Cupper(Heat exchanger brazing), Brass, Bronze, PTFE, FKM, EPDM, PVC, NBR, POM, PE, PP, Carbon, Ceramic
Facility water system	Temperature range		°C	5 to 40
	Pressure range		MPa	0.3 to 0.5
	Required flow 50/60Hz		L/min	25 / 25
	Facility water pressure differential		MPa	More than 0.3
	Facility water inlet, outlet port			Rc1/2 (Symbol F: G1/2, Symbol N: NPT1/2)
	Wetted material			Stainless, Cupper(Heat exchanger's brazing), Bronze, Brass PTFE, NBR, EPDM
Electric system	Power supply			AC200/200-230V 50/60Hz 3phase Allowable voltage fluctuation ±10% (No continuous voltage fluctuation)
	Recommended earth leakage breaker[*8]	Rated current	A	30
		Sensitivity	mA	30
	Rated operating current 50/60Hz [*5]		A	13 / 14
	Rated power consumption 50/60Hz [*5]		kW (kVA)	3.3 / 4.2 (4.4 / 4.9)
Sound level (Front 1m / Height 1m) [*5]			dB(A)	65
Accessory				Alarm cord list label 2pc.(English 1pc./Japanese 1pc.), Operation manual 2pc. (English 1pc./Japanese 1pc.), Y strainer (40 meshes) 25A, Barrel nipple 25A Anchor brackets 2pcs.(including M10 bolts 4pcs.)[*9]
Weight (dry condition)			kg	Approx.124

∗1 Use 15% ethylene glycol aqueous solution if operating in a place where the circulating fluid temp. or ambient temperature is lower than 10 °C. Please discharge the facility water from the facility water circuit when there is a risk of freezing.
∗2 Use fluid in condition below as the circulating fluid.
Tap water: Standard of The Japan Refregeration And Air Conditioning Industry Association (JRA GL-02-1994)
15% ethylene glycol aqueous solution: diluted by tap water in condition above without any additives such as antiseptics.
Deionized water: Conductivity 1μS/cm and higher (electrical resistivity 1MΩ･cm and lower)
∗3 (1)Facility water temp.: 32 °C, (2)Circulating fluid : Tap water, (3)Circulating fluid temp.: 20 °C, (4)Circulating fluid flow rate : Rated flow rate, (5)Power supply: AC200V
∗4 (1)Facility water temp.: 32 °C, (2)Circulating fluid : Tap water, (3) Circulating fluid flow rate : Rated flow rate, (4)Power supply: AC200V
∗5 (1) Facility water temp .: 32 °C, (2)Circulating fluid : Tap water, (3)Circulating fluid temp.: 20 °C, (4)Heat load : Same as the cooling capacity, (5)Circulating fluid flow rate: Rated flow rate, (6)Power : AC200V, (7)External piping length: Minimum
∗6 When circulating fluid outlet port pressure = 0.5MPa.
∗7 Fluid flow rate to maintain the cooling capacity and to keep the circulating fluid outlet port puressure to 0.5MPa or less. If the actual flow rate is lower than this, please install a bypass piping.
∗8 To be prepared by the customer. A specified earth leakage breaker is installed for option B [Earth leakage breaker] of each model.
∗9 The anchor brackets (including M10 bolts) are used for fixation with the skid when this product is packed. The anchor bolts are not attached.

9.1.4 HRS090-W∗-40∗

Table 9-4 Specifications[HRS090-W∗-40∗]

Model				HRS090-W∗-40∗
Cooling method				Water-cooled refrigerated type
Refrigerant				R410A (HFC)
Quantity of refrigerant			kg	1.15
Control method				PIDcontrol
Ambient temperature[*1]			°C	5 to 45
Circulating fluid system	Circulating fluid[*2]			Tap water, Ethylene glycol aqueous solution 15%, Deionized water
	Operating temperature range[*1]		°C	5 to 35
	Cooling capacity 50/60Hz [*3]		kW	9.0 / 10.5
	Heating capacity[*4]		kW	1.7 / 2.2
	Temperature stability[*5]		°C	±0.5
	Pump capacity	Rated flow rate 50/60Hz (Outlet) [*6]	L/min	29 / 45
		Maximum flow rate 50/60Hz	L/min	55 / 68
		Maximum lifting height	m	50
	Minimum operating flow rate 50/60Hz [*7]		L/min	29 / 45
	Tank capacity		L	18
	Circulating fluid outlet, circulating fluid return port			Rc1 (Symbol F: G1, Symbol N: NPT1)
	Drain port			Rc1/4 (Symbol F: G1/4, Symbol N: NPT1/4)
	Wetted material			Stainless, Cupper(Heat exchanger brazing), Brass, Bronze, PTFE, FKM, EPDM, PVC, NBR, POM, PE, PP, Carbon, Ceramic
Facility water system	Temperature range		°C	5 to 40
	Pressure range		MPa	0.3 to 0.5
	Required flow 50/60Hz		L/min	25 / 25
	Facility water pressure differential		MPa	More than 0.3
	Facility water inlet, outlet port			Rc1/2 (Symbol F: G1/2, Symbol N: NPT1/2)
	Wetted material			Stainless, Cupper(Heat exchanger's brazing), Bronze, Brass PTFE, NBR, EPDM
Electric system	Power supply			AC380-415V 50/60Hz 3phase Allowable voltage fluctuation ±10% (No continuous voltage fluctuation)
	Earth leakage breaker(Standard)	Rated current	A	20
		Sensitivity	mA	30
	Rated operating current 50/60Hz [*5]		A	6.4 / 6.7
	Rated power consumption 50/60Hz[*5]		kW (kVA)	3.4 / 4.2 (4.4 / 4.7)
Sound level (Front 1m / Height 1m) [*5]			dB(A)	65
Accessory				Alarm cord list label 2pc.(English 1pc./Japanese 1pc.), Operation manual 2pc. (English 1pc./Japanese 1pc.), Y strainer (40 meshes) 25A, Barrel nipple 25A Anchor brackets 2pcs.(including M10 bolts 4pcs.)[*8]
Weight (dry condition)			kg	Approx.124
Compliance standard	CE Marking	EMC directive		2004/108/EC
		Machinery directive		2006/42/EC

∗1 Use 15% ethylene glycol aqueous solution if operating in a place where the circulating fluid temp. or ambient temperature is lower than 10 °C. Please discharge the facility water from the facility water circuit when there is a risk of freezing.
∗2 Use fluid in condition below as the circulating fluid.
Tap water: Standard of The Japan Refregeration And Air Conditioning Industry Association (JRA GL-02-1994)
15% ethylene glycol aqueous solution: diluted by tap water in condition above without any additives such as antiseptics.
Deionized water: Conductivity 1μS/cm and higher (electrical resistivity 1MΩ･cm and lower)
∗3 (1)Facility water temp.: 32 °C, (2)Circulating fluid : Tap water, (3)Circulating fluid temp.: 20 °C, (4)Circulating fluid flow rate : Rated flow rate, (5)Power supply: AC400V
∗4 (1)Facility water temp.: 32 °C, (2)Circulating fluid : Tap water, (3) Circulating fluid flow rate : Rated flow rate, (4)Power supply: AC400V
∗5 (1) Facility water temp .: 32 °C, (2)Circulating fluid : Tap water, (3)Circulating fluid temp.: 20 °C, (4)Heat load : Same as the cooling capacity, (5)Circulating fluid flow rate: Rated flow rate, (6)Power : AC400V, (7)External piping length: Minimum
∗6 When circulating fluid outlet port pressure = 0.5MPa.
∗7 Fluid flow rate to maintain the cooling capacity and to keep the circulating fluid outlet port puressure to 0.5MPa or less. If the actual flow rate is lower than this, please install a bypass piping.
∗8 The anchor brackets (including M10 bolts) are used for fixation with the skid when this product is packed. The anchor bolts are not attached.

9.1.5 Refrigerant with GWP reference

Table9-5 Refrigerant with GWP reference

Refrigerant	Global Warming Potential (GWP)	
	Regulation (EU) No 517/2014 (Based on the IPCC AR4)	Revised Fluorocarbons Recovery and Destruction Law (Japanese law)
R134a	1,430	1,430
R404A	3,922	3,920
R407C	1,774	1,770
R410A	2,088	2,090

9.1.6 Communication specification

■ **Regarding the communication specification, refer to the operation manual communication function, HRX-OM-T004.**

9.2 Outline dimensions

9.2.1 HRS090-A∗-20/40∗

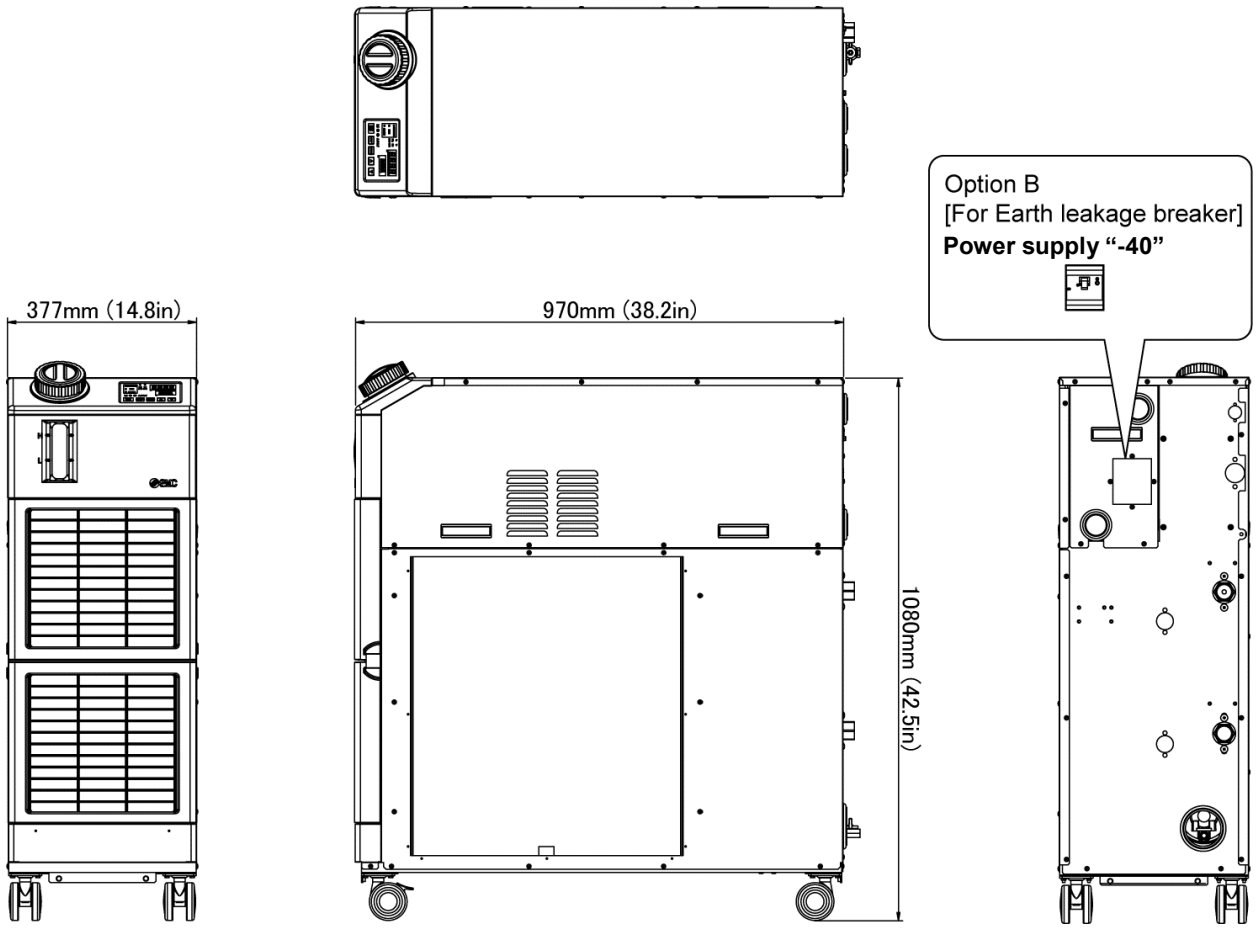

Fig. 9-1 Outline dimensions

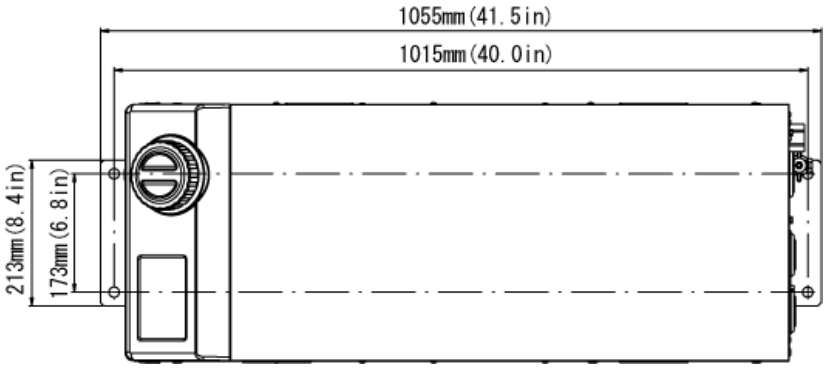

Dimensions for the positions of the anchor bolts (View a-a)

9.2.2 HRS090-W∗-20/40∗

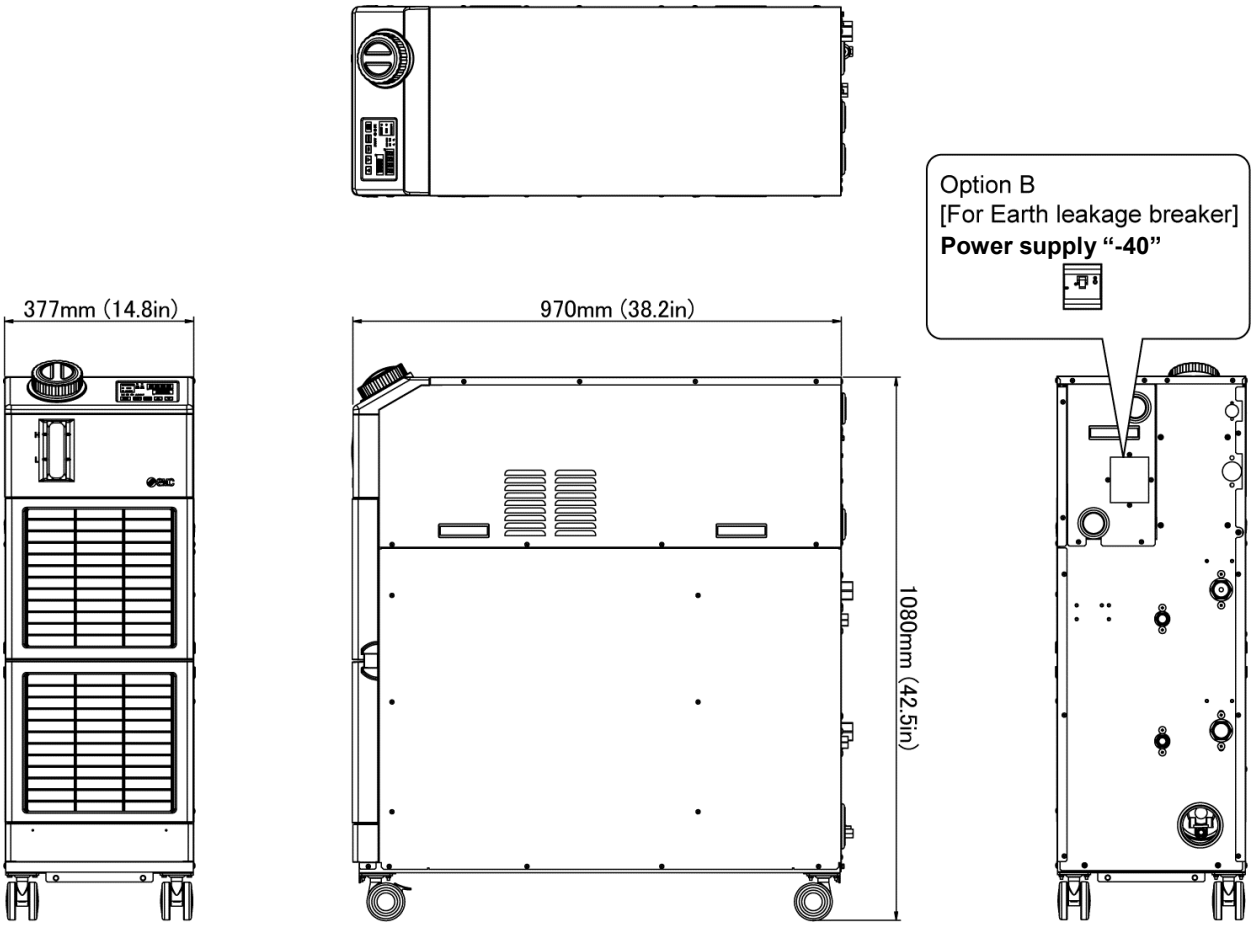

Fig. 9-2 Outline dimensions

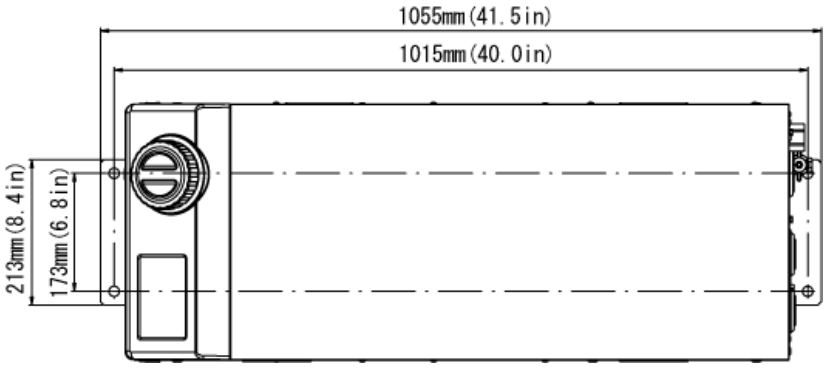

Dimensions for the positions of the anchor bolts (View a-a)

9.3 Flow diagram

9.3.1 HRS090-A∗-20/40∗

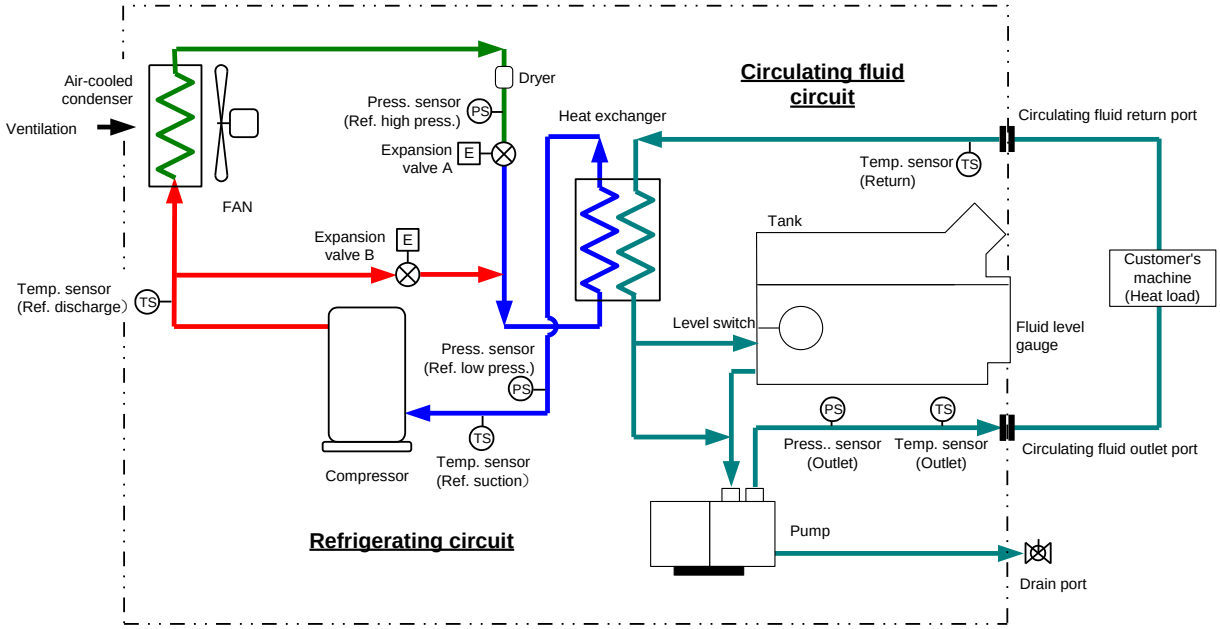

Fig. 9-3 Flow diagram(HRS090-A∗-20/40∗)

9.3.2 HRS090-W∗-20/40∗

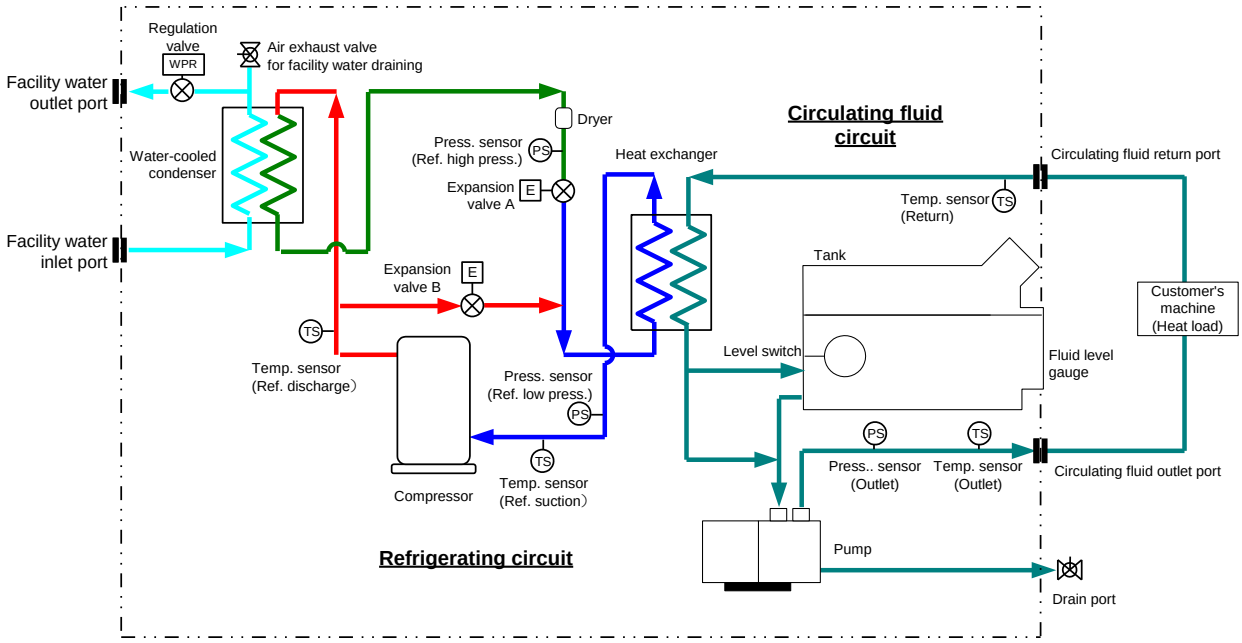

Fig. 9-4 Flow diagram(HRS090-W∗-20/40∗)

9.4 Cooling capacity

9.4.1 HRS090-A∗-20/40∗

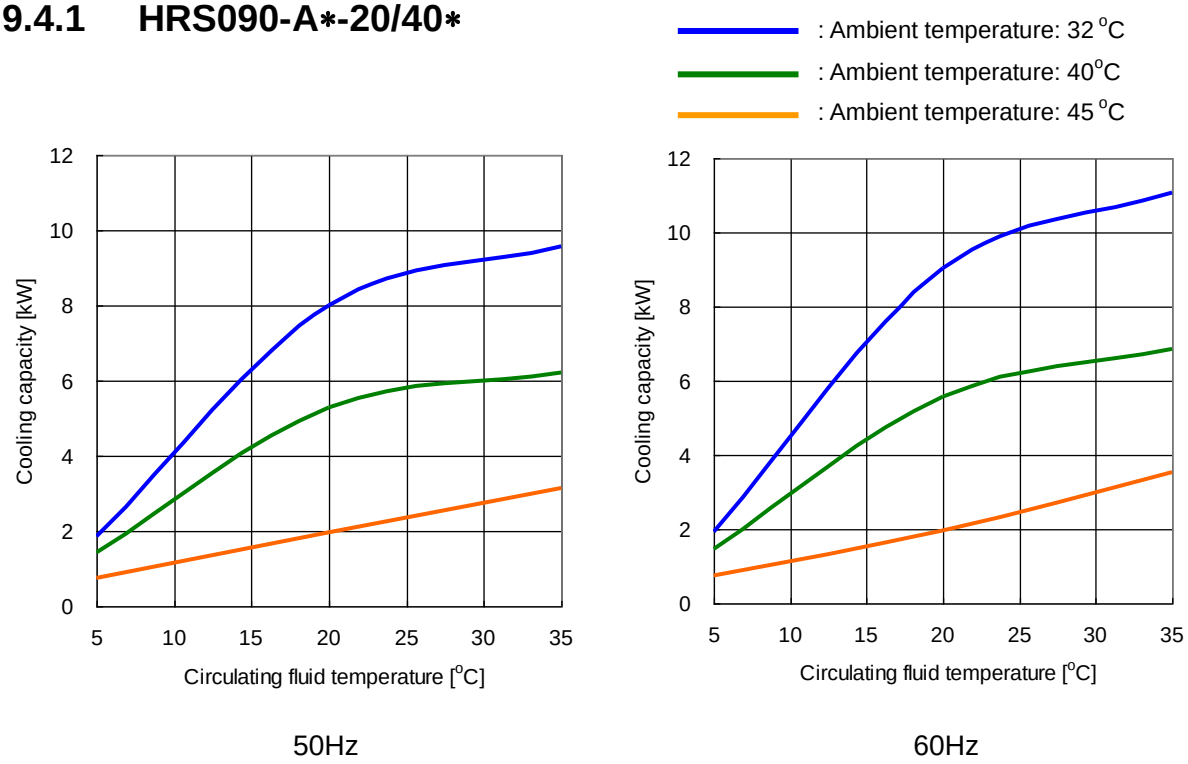

Fig. 9-5 Cooling capacity(HRS090-A∗-20/40∗)

9.4.2 HRS090-W∗-20/40∗

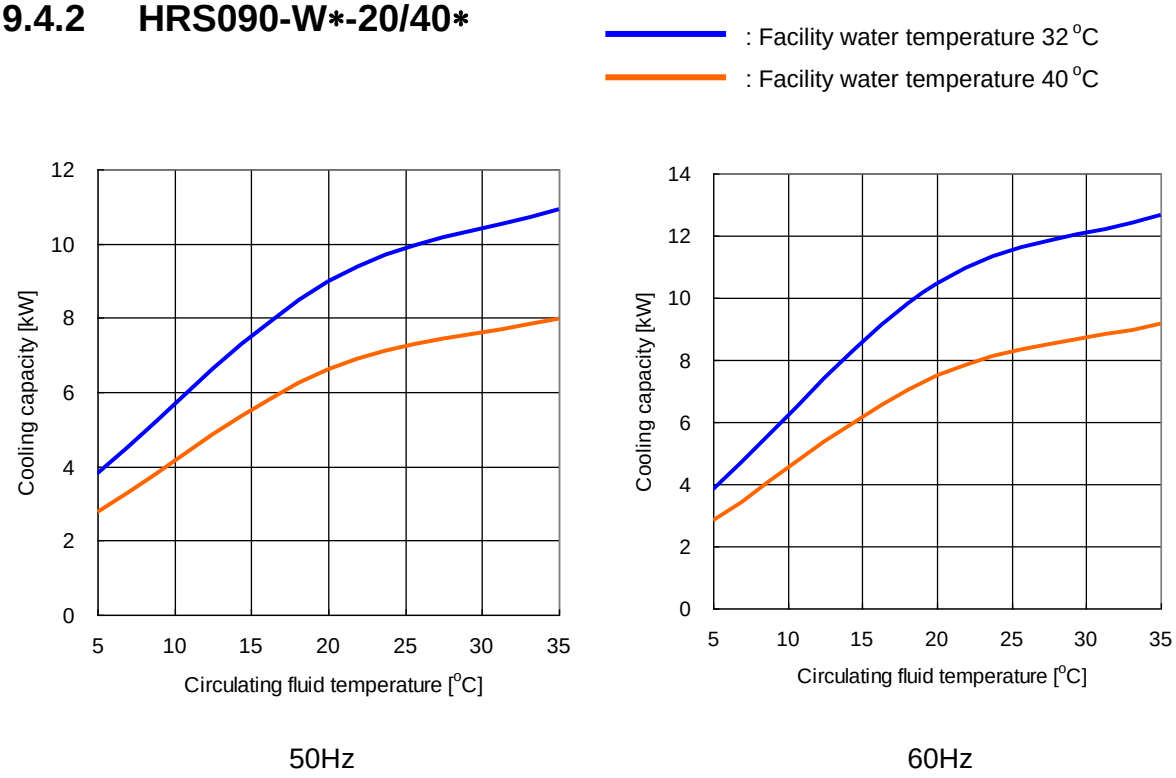

Fig. 9-6 Cooling capacity(HRS090-W∗-20/40∗)

9.5 Pump capacity

9.5.1 HRS090-A/W∗-20/40∗

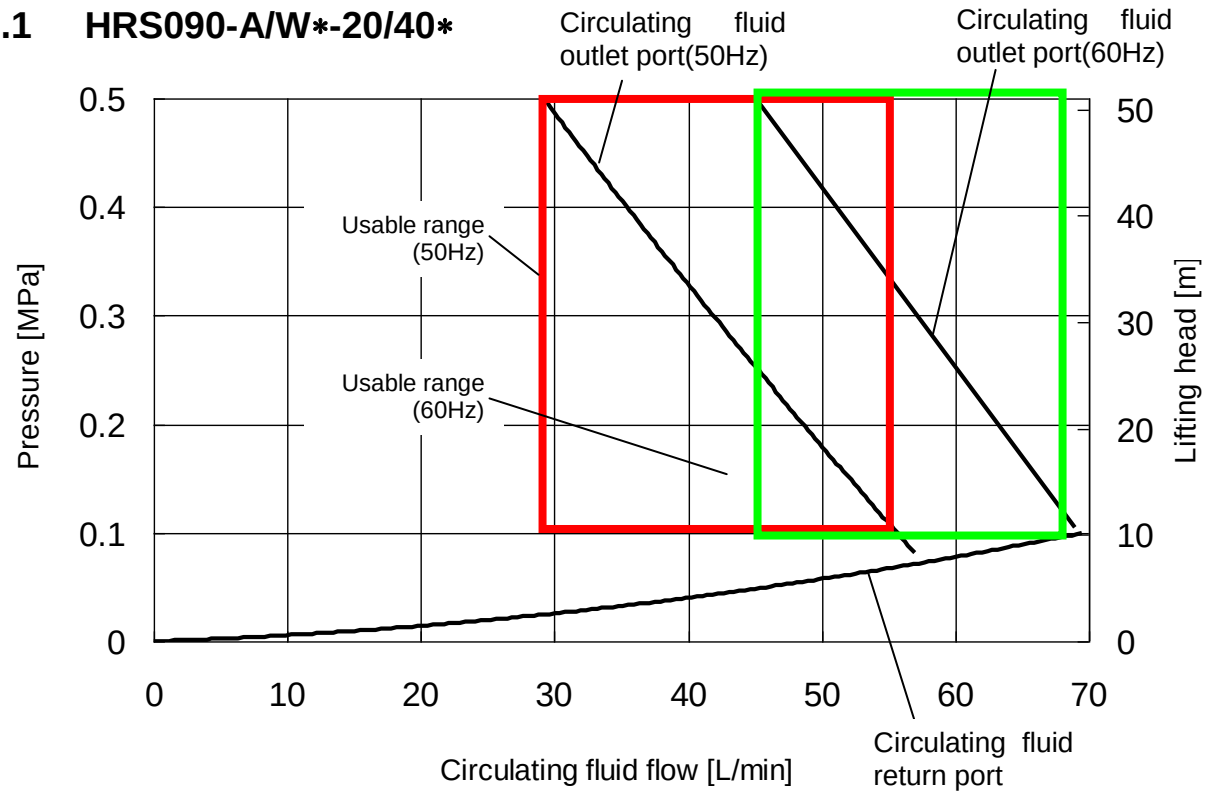

Fig. 9-7 Pump capacity (HRS090-A/W∗-20/40∗)

9.6 Types of hazard labels

(For HRS090-∗∗-40-∗)

The product has various potential hazards and they are marked with warning labels. Be sure to read this section before starting any work on the product.

■ Warning related to electricity

⚠ WARNING

This symbol stands for a possible risk of electric shock.

The product is operated at high voltage and contains uncovered live terminals inside.
DO NOT operate the product without cover panels fitted.
DO NOT work inside this product unless you have been trained to do so.

■ Warning related to high temperatures

⚠ WARNING

This symbol stands for a possible risk of hot surface and burns.

The product has surfaces that can reach high temperatures during operation. Even after the power is turned off, there can still be residual heat in the product.
- **DO NOT operate the product without cover panels fitted.**
- **DO NOT start working inside the product until the temperature has decreased sufficiently.**

■ Warning related to rotating objects (Air cooled type only)

⚠ WARNING

This symbol stands for a possible risk of cutting fingers or hand, or entanglement by rotating fan (For air-cooled type).
The product contains a cooling fan that rotates during operation of the product.
The fan can start and stop intermittently and without warning.
- **DO NOT operate the product without cover panels fitted.**

9.6.1 Locations of Hazard Labels

There are various warning labels on the product to show the potential hazards.

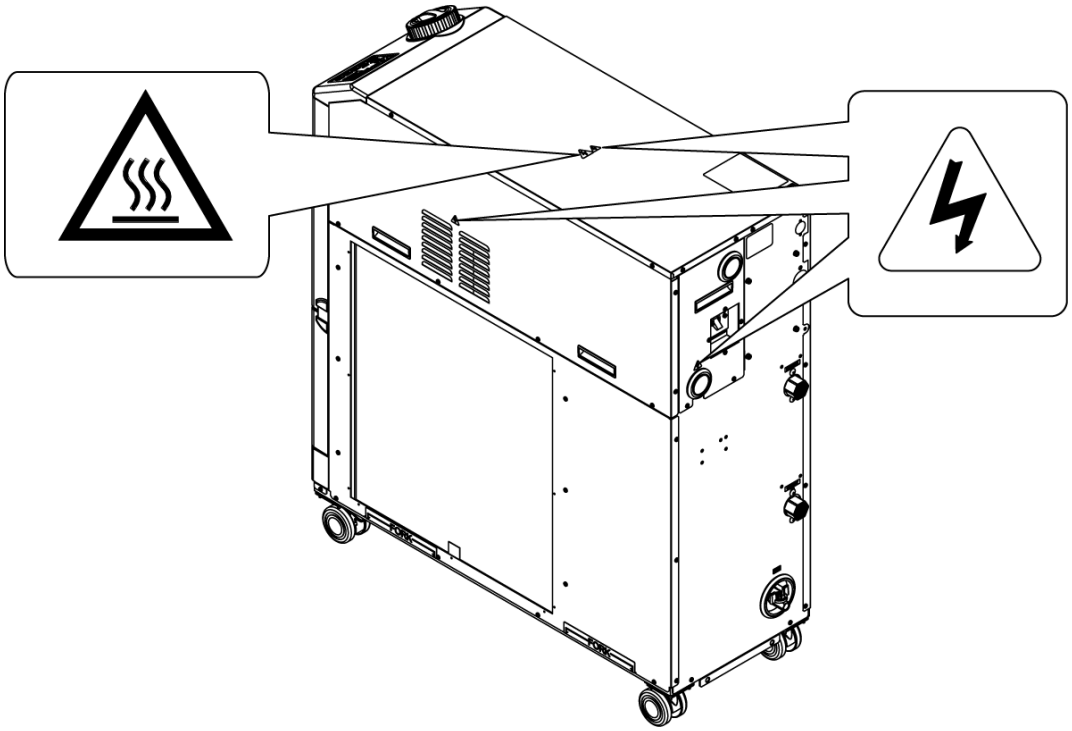

Fig. 9-8 Locations of Hazard Labels

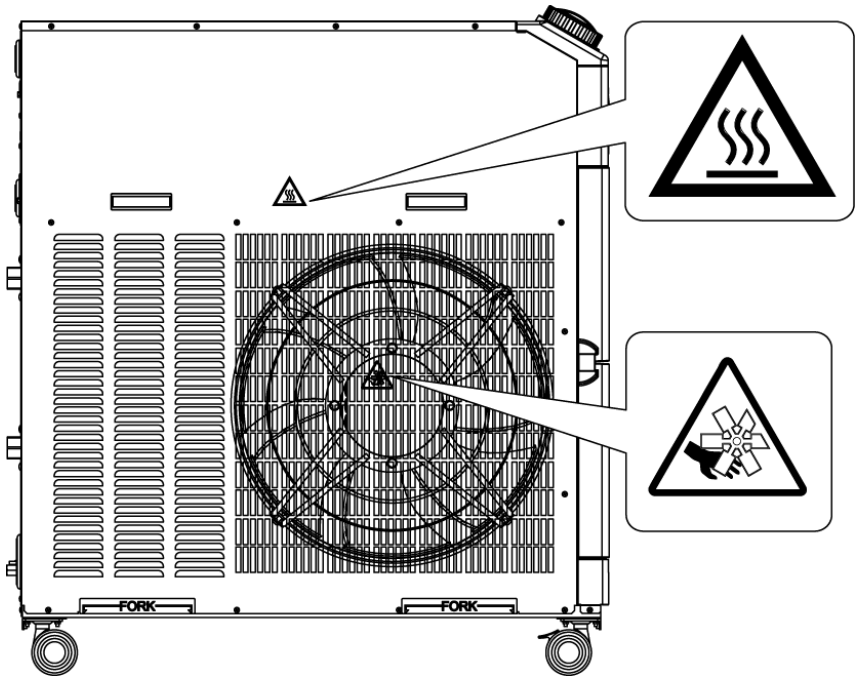

Fig. 9-9 Locations of Hazard Labels

9.7 Compliance standard

This system conforms to the following standards.

Table 9-5 Compliance standard

Standard			Model
CE Mark	EMC Directive Machinery Directive	2004/108/EC 2006/42/EC	HRS090-∗∗-40-∗

9.8 Sample DoC.

Sample DoC.

EC DECLARATION OF CONFORMITY

Original declaration

SMC Corporation
4-14-1 Soto-Kanda, Chiyoda-ku, Tokyo 101-0021 Japan

declares under our sole responsibility that the following equipment:

Thermo Chiller
HRS Series
Serial No.: *o001 to *Z999

conforms with the following directive(s) and harmonized standards:

Directive		Harmonized standards
Machinery Directive	2006/42/EC	EN ISO12100:2010 EN60204-1:2006+A1:2009
EMC Directive	2004/108/EC	EN61000-6-2:2005 EN55011:2009+A1:2010

Name and address of the person authorised to compile the technical file:

Mr. G. Berakoetxea, Director & General Manager, SMC European Zone,
SMC España, S.A,.Zuazobidea 14, 01015 Vitoria, Spain

Importer/Distributor in EU and EFTA:

Country	Company	Telephone	Address
Austria	SMC Pneumatik GmbH (Austria)	(43) 2262-62280-0	Girakstrasse 8, AT-2100 Korneuburg
Belgium	SMC Pneumatics N.V./S.A.	(32) 3-355-1464	Nijverheidsstraat 20, B-2160 Wommelgem
Bulgaria	SMC Industrial Automation Bulgaria EOOD	(359) 2 9744492	Business Park Sofia, Building 8-6th Floor, BG-1715 Sofia
Czech Republic	SMC Industrial Automation CZ s.r.o.	(420) 541-426-611	Hudcova 78a CZ-61200 Brno
Denmark	SMC Pneumatik A/S	(45) 70 25 29 00	Egeskovvej 1, DK-8700 Horsens
Estonia	SMC Pneumatics Estonia OÜ	(372)651-0370	Laki 12, EE-10621 Tallinn
Finland	SMC Pneumatiikka Finland Oy	(358) 20 7513 513	PL72, Tiistinniityntie 4, SF-02231 Espoo
France	SMC Pneumatique S.A.	(33) 1-6476-1000	1 Boulevard de Strasbourg, Parc Gustave Eiffel, Bussy Saint Georges, F-77600
Germany	SMC Pneumatik GmbH	(49) 6103-402-0	Boschring 13-15, D-63329 Egelsbach
Greece	SMC Hellas E.P.E	(30) 210-2717265	Anagenniseos 7-9 - P.C. 14342, Nea Philadelphia, Athens
Hungary	SMC Hungary Ipari Automatizálási Kft.	(36) 23-511-390	Torbágy u. 19, HU-2045 Törökbálint
Ireland	SMC Pneumatics (Ireland) Ltd.	(353) 1-403-9000	2002 Citywest Business Campus, Naas Road, Saggart, Co. Dublin
Italy	SMC Italia S.p.A.	(39) 02-9271-1	Via Garibaldi, 62, I-20061 Carugate, Milano
Latvia	SMC Pneumatics Latvia SIA	(371)781-77-00	Šmerļa ielā, 1-705, Rīga LV-1006
Lithuania	SMC Pneumatics Lietuva,UAB	(370)5-264-81-26	Oslo g.1, LT-04123 Vilnius
Netherlands	SMC Pneumatics B.V.	(31) 20-531-8888	De Ruyterkade 120, NL-1011 AB Amsterdam
Norway	SMC Pneumatics Norway AS	(47) 67-12-90-20	Vollsveien 13c, Granfoss Næringspark, N-1366 Lysaker
Poland	SMC Industrial Automation Polska Sp. zo.o	(48) 22 211 96 00	ul. Poloneza 89, PL-02-826 Warszawa
Portugal	SMC Sucursal Portugal, S.A.	(351) 22 616 6570	Rua De Eng Ferrerira Dias 452 4100-246,Porto
Romania	SMC Romania S.r.l.	(40)21-3205111	Str. Frunzei, Nr.29, Sector 2 Bucharest, Romania
Slovakia	SMC Priemyselna Automatizacia, s.r.o.	(421) 2-444 56 725	Námestie Matina Benku, 10, 81107 Bratislava
Slovenia	SMC Industrijska Avtomatika d.o.o.	(386) 7388 5412	Mirnska cesta 7, SLO-8210 Trebnje
Spain	SMC España, S.A.	(34) 945-184-100	Zuazobidea 14, 01015 Vitoria
Sweden	SMC Pneumatics Sweden AB	(46) 8-603-12-00	Ekhagsvägen 29-31, SE-14171 Segeltorp
Switzerland	SMC Pneumatik AG	(41) 52-396-3131	Dorfstrasse 7, Postfach 117 CH-8484, Weisslingen
United Kingdom	SMC Pneumatics (U.K.) Ltd.	(44) 1908-563888	Vincent Avenue, Crownhill, Milton Keynes, Bucks MK8 0AN

Tokyo, *th January 20**

Iwao Mogi
Director & General Manager
Product Development Division - Ⅵ

Thermo-chiller Daily Check Sheet

Model no. _____
Mfg. code _____

For information about how to perform daily checks of the thermo chiller, refer to section “7.2.1 Daily Check” of the operation manual.
Check and record the condition at start right after setting up.

Date	Performed by	Setting up conditions		Fluid leakage	Fluid amount	Operation panel		Circulating fluid circuit		Facility water circuit (Water-cooled only)				Operation conditions	Result
		Temperature	Humidity	Present/ Not present	Inside/Outside of liquid level indicator range	Display	Operation	Temperature	Discharge press.	Supply temp.	Flow rate	Supply press.	outlet press.	Presence of error	
		°C	%		Inside/Outside			℃	MPa	℃	L/min	MPa	MPa	Present/Not present	
Initial value (Default setting)															

Chapter 10 Product Warranty

1. Period

The warranty period of the product is 1 year in service or 1.5 years after the product is delivered whichever comes first.

2. Scope

For any failure reported within the warranty period which is clearly our responsibility, replacement parts will be provided. In that case, removed parts shall become the property of SMC.
This guarantee applies only to our product independently, and not to any other damage incurred due to the failure of the product.

3. Content

1. We guarantee that the product will operate normally if it is installed under maintenance and control in accordance with the Operation Manual, and operated under the conditions specified in the catalog or contracted separately.
2. We guarantee that the product does not have any defects in components, materials or assembly.
3. We guarantee that the product complies with the outline dimensions provided.
4. The following situations are out of scope of this warranty.
   (1) The product was incorrectly installed or connected with other equipment.
   (2) The product was under insufficient maintenance and control or incorrectly handled.
   (3) The product was operated outside of the specifications.
   (4) The product was modified or altered in construction.
   (5) The failure was a secondary failure of the product caused by the failure of equipment connected to the product.
   (6) The failure was caused by a natural disaster such as an earthquake, typhoon, or flood, or by an accident or fire.
   (7) The failure was caused by operation different from that shown in the Operation Manual or outside of the specifications.
   (8) The checks and maintenance specified (daily checks and regular checks) were not performed.
   (9) The failure was caused by the use of circulating fluid or facility water other than those specified.
   (10) The failure occurred naturally over time (such as discoloration of a painted or plated face).
   (11) The failure does not affect the functioning of the product (such as new sounds, noises and vibrations).
   (12) The failure was due to the “Installation Environment” specified in the Operation Manual.
   (13) The failure was caused by the customer disregarding “6. Request to customers”.

4. Agreement

If there is any doubt about anything specified in “2. Scope” and "3. Content”, it shall be resolved by agreement between the customer and SMC.

5. Disclaimer

(1) Expenses for daily and regular checks
(2) Expenses for repairs performed by other companies
(3) Expenses for transfer, installation and removal of the product
(4) Expenses for replacement of parts other than those in this product, or for the supply of liquids
(5) Inconvenience and loss due to product failure (such as telephone bills, compensation for workplace closure, and commercial losses)
(6) Expenses and compensation not covered in “2. Scope”.

6. Request to customers

Proper use and maintenance are essential to assure safe use of this product. Be sure to satisfy the following preconditions. Please note that we may refuse to carry out warranted repair if these preconditions have been disregarded.

(1) Use the product following the instructions for handling described in the Operation Manual.
(2) Perform checks and maintenance (daily checks and regular checks) specified in the Operation Manual and Maintenance Manual.
(3) Record the check and maintenance results on the daily check sheet attached to the Operation Manual and Maintenance Manual.

7. Request for Warranted Repair

For warranted repair, please contact the supplier you purchased this product from.
Warranted repair shall be on a request basis.

Repair shall be provided free of charge in accordance with the warranty period, preconditions and terms defined above. Therefore, a fee will be charged for any repairs if a failure is detected after the end of the warranty period.

Revision
Rev.H : May.2019

SMC Corporation

4-14-1, Sotokanda, Chiyoda-ku, Tokyo 101-0021 JAPAN
Tel: + 81 3 5207 8249 Fax: +81 3 5298 5362
URL http://www.smcworld.com

Note: Specifications are subject to change without prior notice and any obligation on the part of the manufacturer.
© 2019 SMC Corporation All Rights Reserved