SMC
Expertise – Passion – Automation

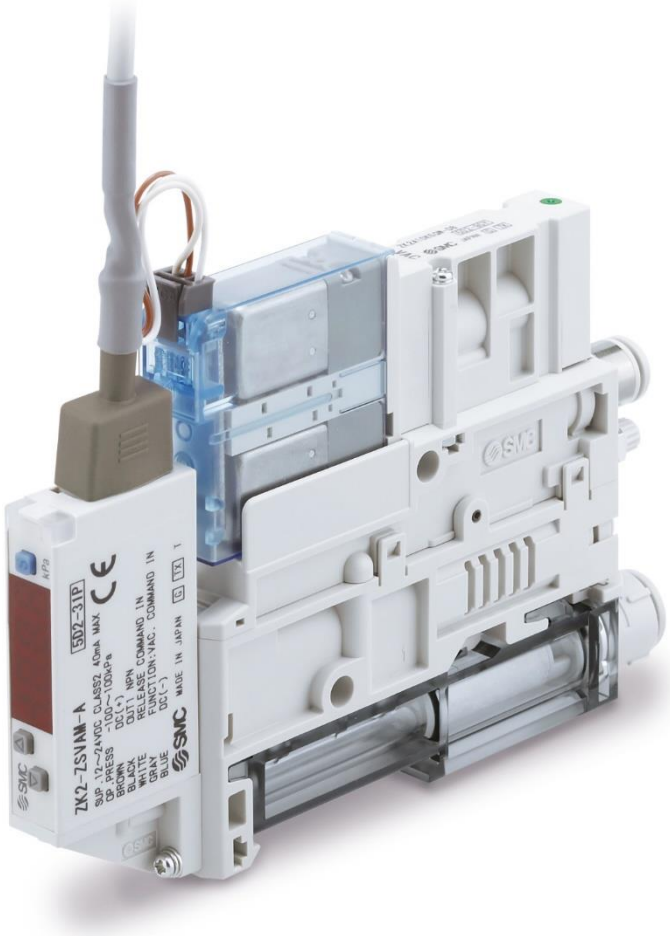

SWITCHOVER DOCUMENT

ZK2-A Series
Multistage ejector

Improved features and related benefits

Feature

- Use of V100 series as pilot valve, instead of S070 (The old valve was translucent, whereas the new V100 has a blue cover)

Old product ZK2

New ZK2-A

***Please note that pilot valves are not mounting compatible**

EMC
European Marketing Centre

Improved features and related benefits

Feature

- Retrofitting of vacuum pressure sensor/switch and of manifold DIN rail mounting bracket is allowed

Customer Benefit

- Flexibility in future product upgrades without the need to purchase a new one.

Vacuum pressure port

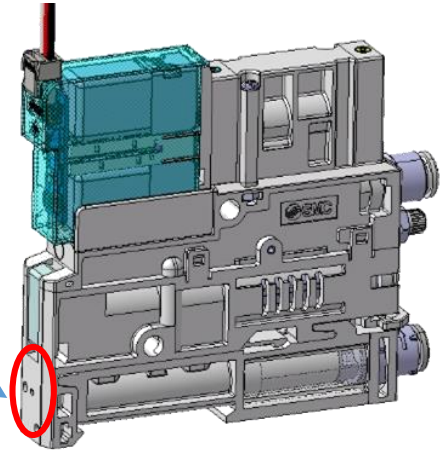

1- Change to convex clip for mounting pressure sensor/switch

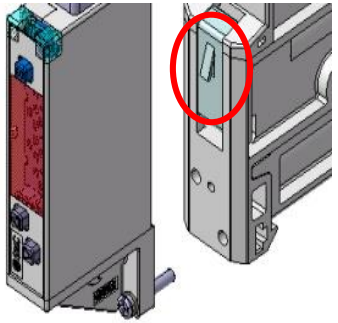

Clip part number:
ZK2-CL3-2-A

Old ZK2

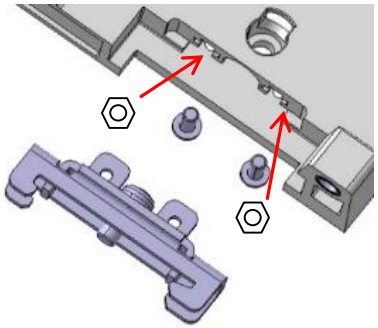

New ZK2-A

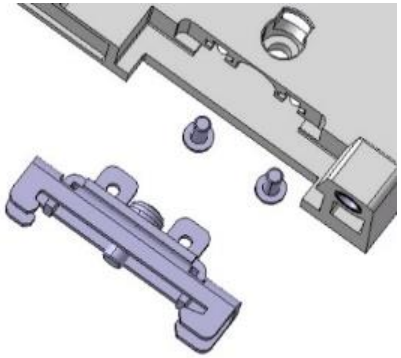

Female thread added to bracket, where no nut is needed

2- Filter case. Change to type with vacuum port

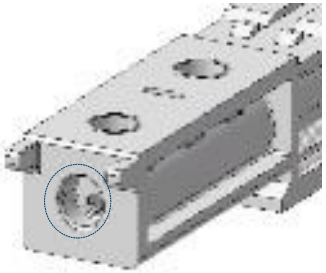

Clip part number:
Filter case part number:
ZK2-FC-P-A

Improved features and related benefits

Feature

- Integration of check valve into body gasket

Customer Benefit

- Prevention of check valve fitting errors and dropping down when replacing filter case

Old ZK2

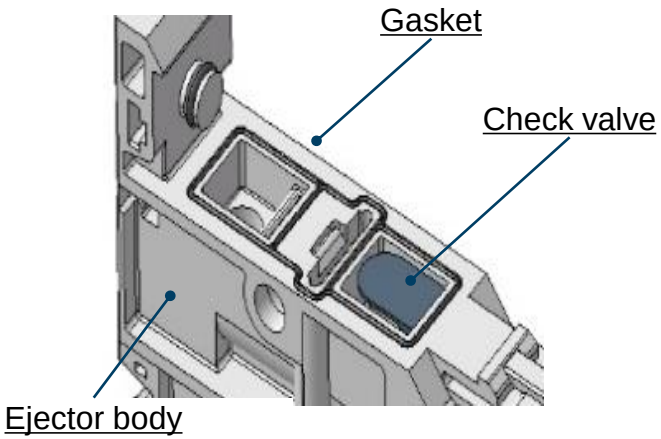

Separate gasket and check valve

New ZK2-A

1 check valve

2 check valves

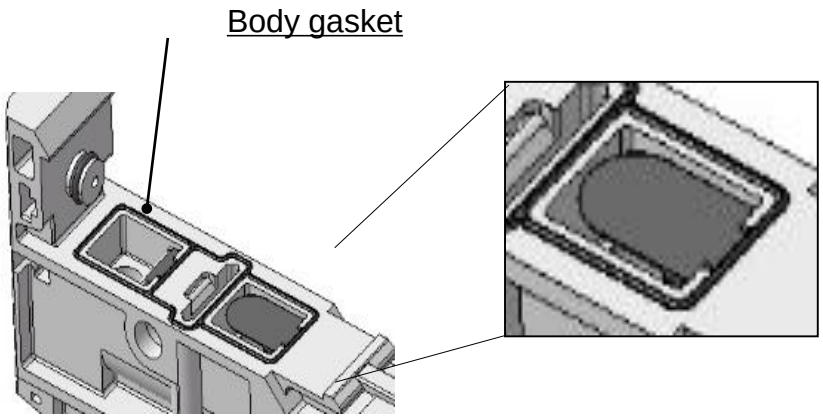

Integrated check valve and gasket

Improved features and related benefits

Feature

- Long lock nut available as standard
- 18mm longer lock nut.

Customer Benefit

- Better control of the flow
- Better access to needle in manifold mountings
- The long nut can be tightened by a screwdriver.

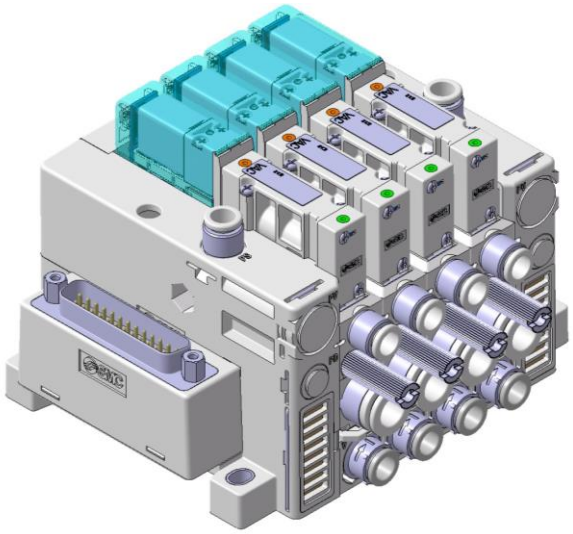

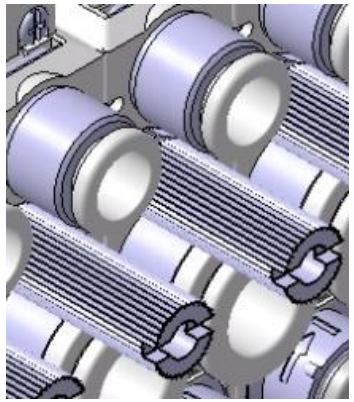

Mounting precautions

- Mounting is interchangeable with the current model
- Both single ejector unit and manifold have the same mounting hole pitches and port sizes.
- New top mounting holes, making mounting of the ejector easier than the existing product.

Old ZK2 **New ZK2-A**

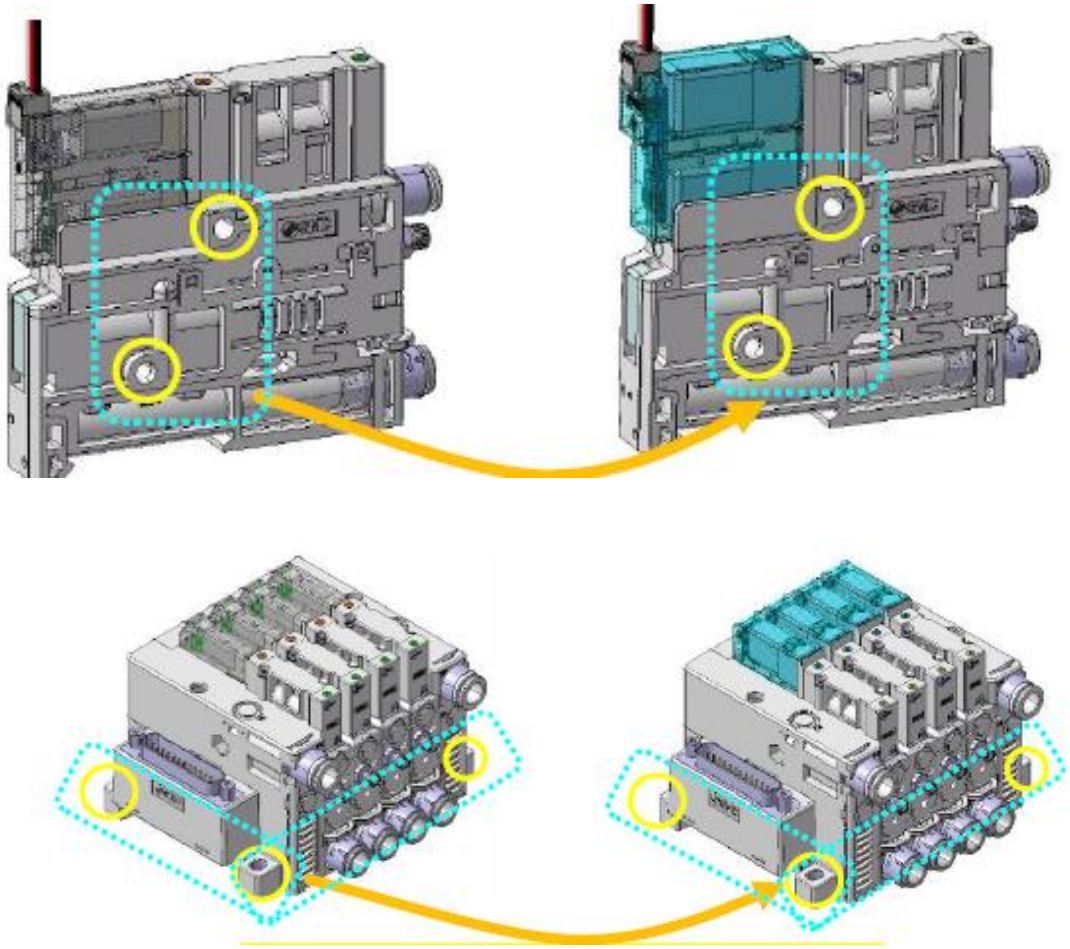

Mounting precautions

- New valve assembly does not fit into existing/single unit ejector.
- As new V100 pilot valve is wider than previous S070 pilot valve:

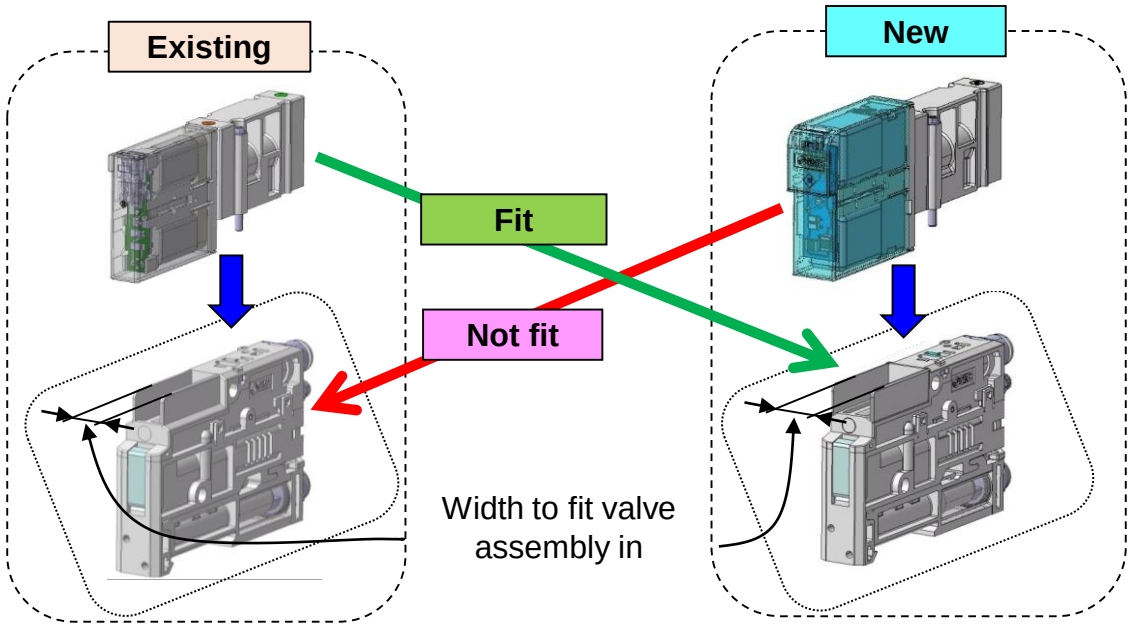

Mounting precautions

- New valve fits in middle stations of the existing manifold

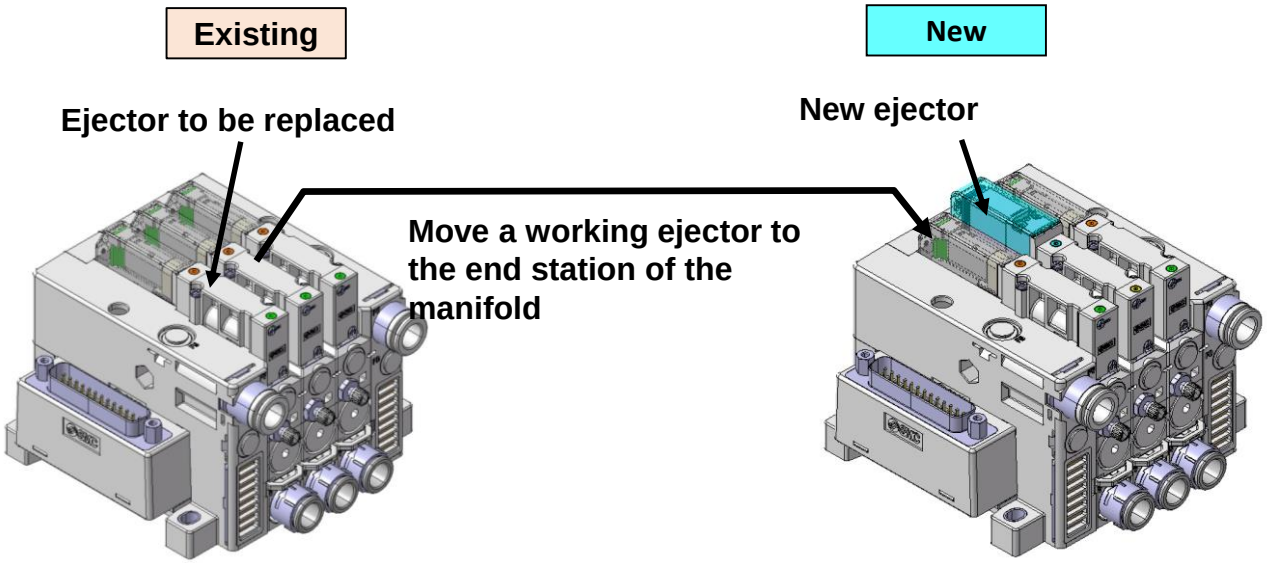

Mounting precautions

- New valve does not fit into the first and last stations of existing manifold

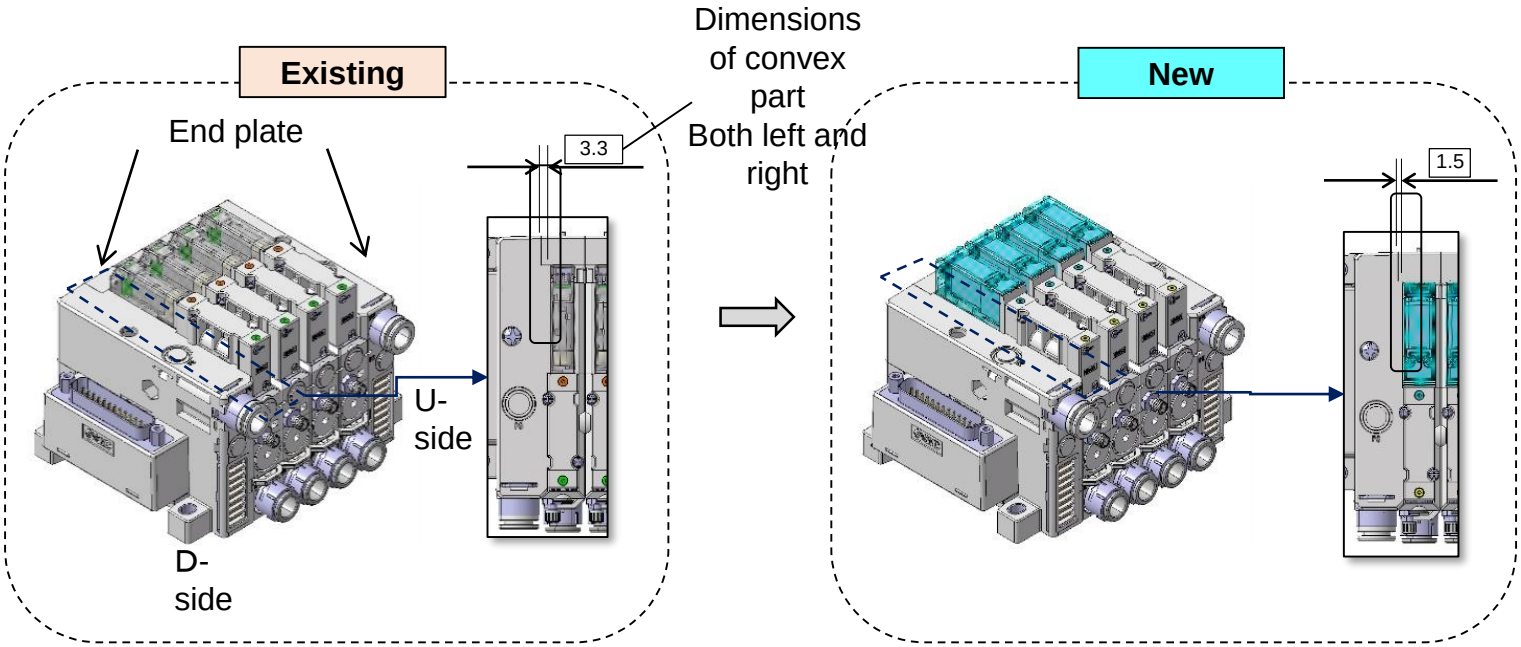

Mounting precautions

- End plate must be replaced to mount new ejector in the first or last station of the existing manifold

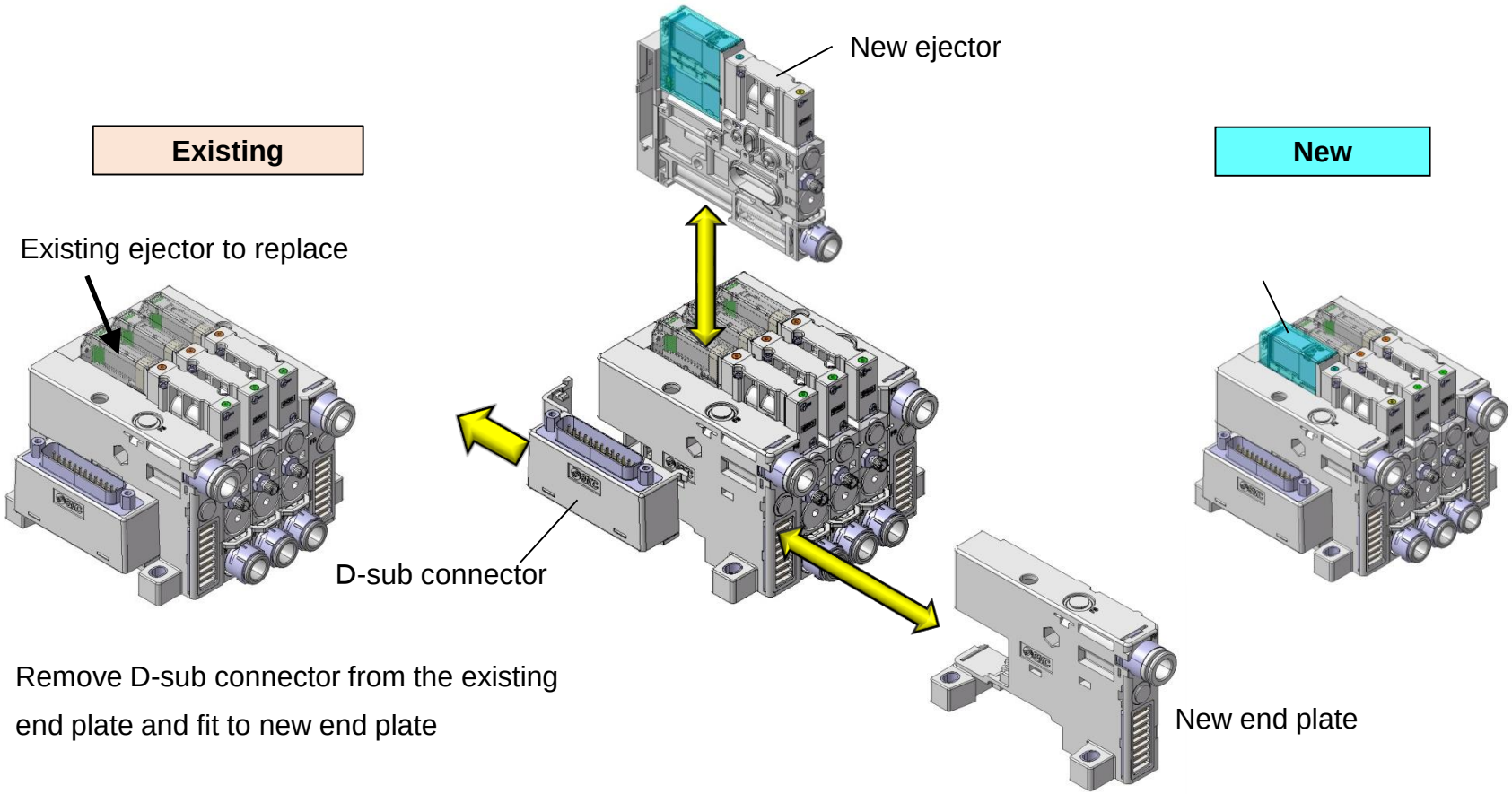

Remove D-sub connector from the existing end plate and fit to new end plate

Technical details

Standard specifications

Main specifications remain unchanged from the existing product.

	ZK2□07	ZK2□10	ZK2□12	ZK2□15
Silencer exhaust/complex exhaust max. suction flow rate	29 l/min	44 l/min	61 l/min	67 l/min
High noise reduction silencer exhaust max. suction flow rate	34 l/min	56 l/min	72 l/min	83 l/min
Air consumption	24 l/min	40 l/min	58 l/min	90 l/min
Maximum vacuum pressure	-91 kPa			
Supply pressure range	0.1 to 0.6 MPa			
Typical supply pressure	0.35 MPa			0.40 MPa